SPONS'

DICTIONARY OF ENGINEERING.

VOLUME III.

SPONS'

DICTIONARY OF ENGINEERING,

Civil, Mechanical, Military, and Naval;

WITH TECHNICAL TERMS

IN FRENCH, GERMAN, ITALIAN, AND SPANISH.

EDITED BY

BYRNE AND SPON.

VOLUME III.

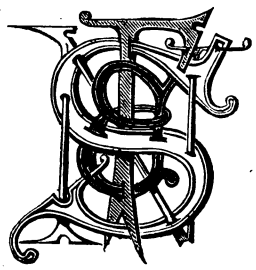

LONDON:
E. & F. N. SPON, 48, CHARING CROSS.
NEW YORK: 446, BROOME STREET.
1874.

LONDON: PRINTED BY WILLIAM CLOWES AND SONS, STAMFORD STREET AND CHARING CROSS.

A species of double furnace, Figs. 4315 to 4317, is now extensively used, with a marked improvement in the yield of coal. A fire-place of large dimensions is provided, and the body is made

4316.

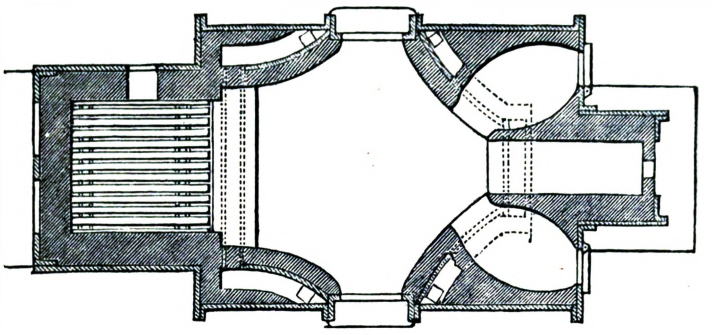

4315.

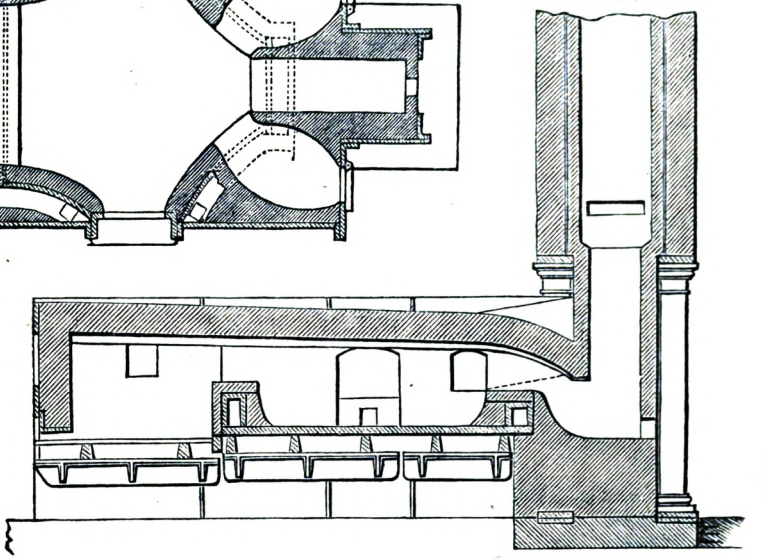

wider than in single furnaces. A working door is made at each side, and two puddlers work at the same time. Twice the usual quantity of pig iron is charged. In all other respects the operation is conducted as in single furnaces. It is difficult, however, to get the puddlers to work well to time. Unless this be done, no advantage is realized over the single furnace. The two men must bring their heats to the respective stages simultaneously, in order to render these furnaces profitable. If one be kept waiting for ever so short a period by the other, the loss in iron more than counterbalances the reduced consumption of coal. This difficulty of obtaining men who will work thus in concert has operated against the general use of double furnaces. Were it not for this circumstance, they would entirely supersede the single furnace. In the double furnace, working hot crude iron, the consumption of fuel is under one-half of the quantity required with single furnaces working cold iron.

4317.

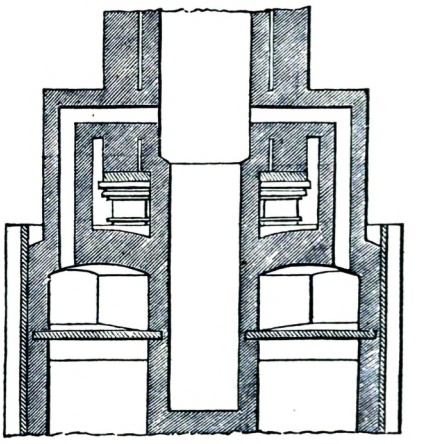

The puddling furnace differs but slightly from the boiling furnace. With a few trifling alterations in the interior, principally confined to lowering the flue-bridge, which in the puddling furnace is seldom more than 6 in. high, and raising the bottom to within 8 in. of the door, the boiling furnace is equally well adapted for puddling.

4318.

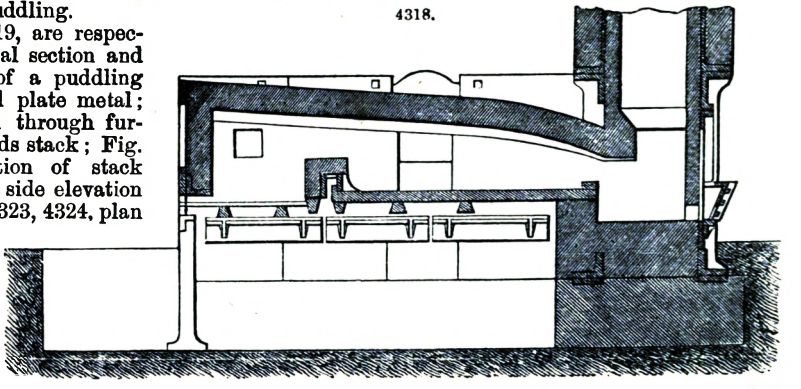

Figs. 4318, 4319, are respectively a longitudinal section and a sectional plan of a puddling furnace for refined plate metal; Fig. 4320, section through furnace looking towards stack; Fig. 4321, back elevation of stack frame; Fig. 4322, side elevation of furnace; Figs. 4323, 4324, plan and end views of top of stack showing damper; Fig. 4325, sectional plan of stack; Fig. 4326, section of stack with damper at the bottom; Figs. 4327, 4328, view and section of working door; and Fig. 4329, view of charging door.

4323.

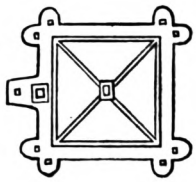

4319.

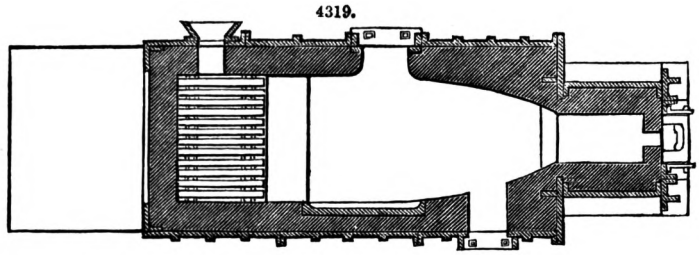

4320.

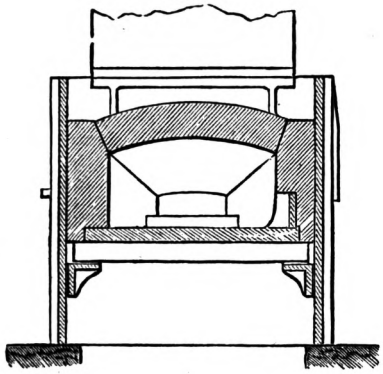

4321.

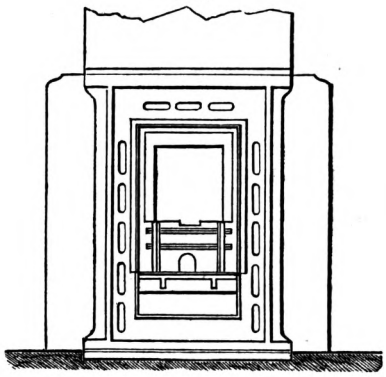

4324.

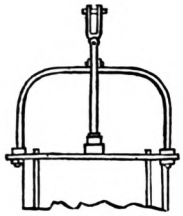

4325.

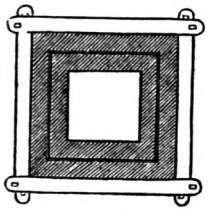

4326.

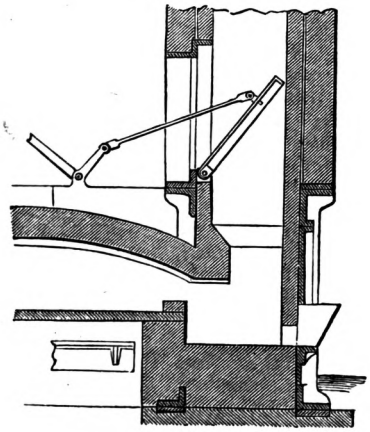

4322.

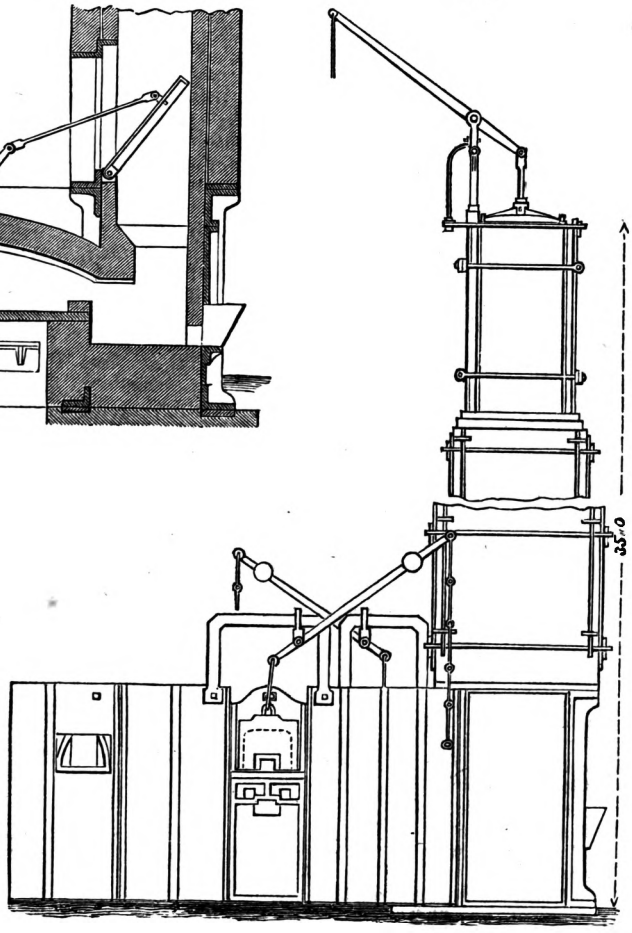

4327.

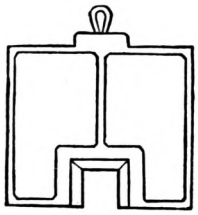

4328.

4329.

The process differs from boiling in the absence of the swelling and violent agitation of the fluid iron. The general charge is 4¾ cwt. of broken refined metal to a heat. In boiling it is usual to withdraw the finished balls before charging a fresh heat, but in puddling the refined metal is charged through the small door next the flue, at the point when the metal has arrived at the pasty condition. The reduction of temperature consequent on the introduction of a body of cold metal has then no sensible effect in retarding the progress of the operation. The metal is consequently exposed to the furnace flame for a period of fifteen to eighteen minutes before the withdrawal of the heat under operation, and when drawn it is forwarded into the body of the furnace, which has been already elevated to a dull red heat. The damper being opened, a sharp heat is obtained, and in from ten to twelve minutes the metal is melted, and the operation of puddling commences. The same incessant raking motion by the puddler, relieved occasionally by his second hand, is practised as in boiling, and is followed by the separation in a great measure of the iron from the cinder. Finally, it is brought to the same pasty condition, and balled up.

From the time of charging to the extraction of the last ball, the puddling process occupies about one hour and twenty-five minutes: but as the iron is charged fifteen minutes before the extraction of the previous charge, the time actually occupied in working each heat is one hour and ten minutes. With inferior workmen it averages one hour and thirty-six minutes.

The presence of sulphur, and of several metals, including copper, lead, and zinc, retards the puddling process. If any of these are present in considerable quantity, the iron cannot be brought to a pasty condition for balling up, all the efforts of the puddler are thrown away, and the heat eventually has to be raked out. Crude iron rarely contains either of these metals in injurious quantities; but when they obtain admission the pasty character of the mass is destroyed, and the further conversion of cast into malleable iron is totally prevented.

The yield and general quality of several kinds of iron are frequently improved by the addition, during the process of conversion, of a mixture composed of ground magnetic oxide or a rich hematite, caustic lime, and a minimum dose of black oxide of manganese; the quantity added may amount to 5 or 6 per cent. by weight of the charge. The operation is facilitated and the malleablization greatly increased by their employment, which we attribute to the oxygen of the ore and the caustic lime uniting with the carbon and sulphur of the metal.

The time and labour expended in working the superior qualities of iron are greater than that required with the inferior kinds. The grey varieties will require twenty to twenty-five minutes longer in "coming to nature," as the working puddler terms it, the point from which the balling-up process may be said to commence. The cause of this longer time appears to be that the larger quantity of carbon in the metal requires for its evolution longer exposure to the oxygen of the passing current of air, and repeated manipulation to facilitate its escape.

In the working of iron from carbonaceous ironstone the labour is very severe. This metal melting at a low temperature, and containing the largest percentage of carbon, is brought to the malleable state with the greatest difficulty. Its extreme fluidity, the absence of a good cinder for its protection, and the frequent presence of sulphur, lengthen the process, add to the waste, and reduce the quality.

Puddling hot iron direct from the refinery has also been practised, but it is doubtful if the advantages from this mode of working can ever be such as to cause its extensive adoption. The crude iron, after being refined, is run into a puddling furnace and worked in the usual manner. The invention is a very old one, having been first tried nearly half a century ago. A due separation of the metal from the cinder of the finery appears to be the principal difficulty in this mode of working. In the ordinary finery the metal and cinder escape together from the hearth, but by this plan the metal only is allowed to enter the puddling furnace, the cinder being obtained in a separate running. Close attention is required to be paid to the separation; if cinder enters the furnace along with the metal, the conversion into malleable iron is rendered more difficult, while the escape of metal along with the cinder results in a direct loss.

Puddling with steam has been several times experimentally essayed, but after an extensive trial it was discovered that the advantages were not commensurate with the expense of applying and maintaining the apparatus.

In the early puddling furnaces the body between the ash-pit and the stack was filled up nearly to the level of the intended bottom with cinder or other material; above this a sand bottom was made on which the puddling was conducted. The sand bottom, however, gave way to the iron bottom, now universally adopted in preference to any other. For boldness and originality the idea of using a thin plate of cast iron as a bottom for a furnace constructed expressly for melting crude iron has not been equalled, but without it the puddling process could not have attained its present high state of perfection. Next to the invention of puddling, the iron bottom was the greatest improvement effected in the operation of converting cast into malleable iron bars.

While sand bottoms were used the yield was extravagantly high, the consumption of coal in the furnace was great, and the resulting bar iron, through mingling with a portion of the silicious bottom, was inferior in quality. This inferiority would have been more apparent but for the employment of the ponderous forge hammers of that period. A portion of the cinder was expelled during the violent hammering to which the blooms were subjected; but as a quantity of the metal was also detached the improvement was not effected without great waste of iron. Formerly the ton of puddled bars was made with a consumption of 30 cwt. and sometimes as much as 36 cwt. of refined metal. At present it is done with about 21 cwt.

The portions of the furnace exposed to the intense heat, and the action of the fluid metal, unprotected by cinder, are rapidly burnt away. For repairing, fire-clay is largely used in several works, while in others calcined forge cinders are successfully employed. Cinder, when the calcination has been carried so far as to convert it into a refractory silicate of iron, is undoubtedly the best material. It does not appear, however, from experiments, that all forge cinders are equally applicable to this purpose. Such as contain a large quantity of metal, and a sparing quantity of silica,

cannot be used with the same success as leaner cinders. Limestone is frequently used in boiling furnaces by the puddler in preference to any other material.

The consumption of iron to produce one ton of puddle-bars by the boiling process varies with the quality of the pigs, and to some extent with the quality of the coal. The yield of good forge pigs smelted from a high burden we find to average 21 cwt. 3 qrs. with a forge of puddlers of average ability; with less able men in other forges, working under precisely similar conditions, the yield has been 22 cwt. 3 qrs. 14 lbs. If the conditions are very favourable and the puddler skilful, the ton of puddle-bars can be produced from 21 cwt. 1 qr. of pigs.

4330.

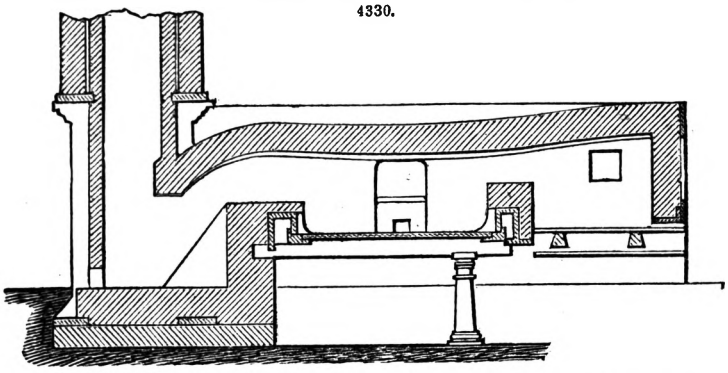

4331.

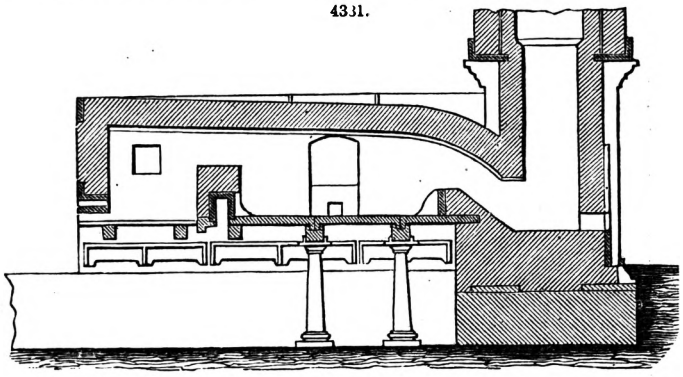

The yield of the iron from carbonaceous ore is probably worse than that from any other description. From the working of the large forges at the Monkland and Dandyvan works, it has been found that the consumption of pigs in these establishments in the boiling process averages 23 cwt. 3 qrs. 19 lbs. a ton of puddle-bars.

The ton of puddle-bars may be produced by the puddling process with a consumption of

4332.

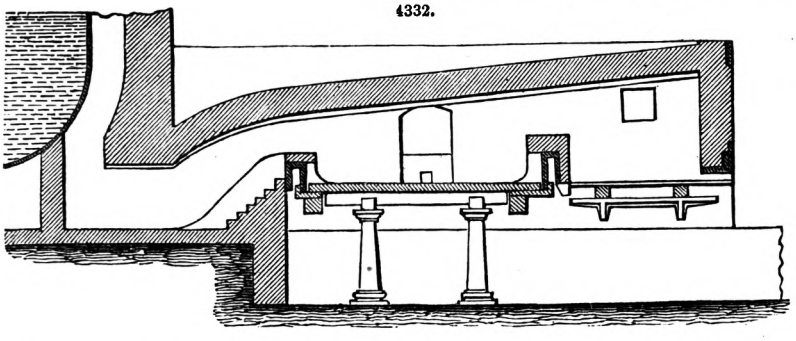

4333.

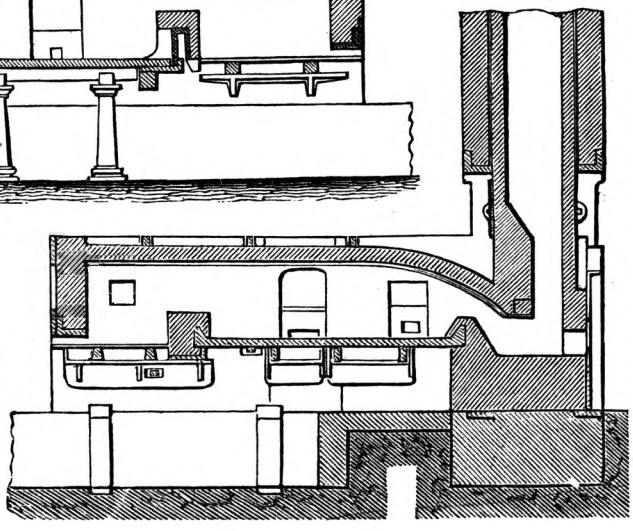

21 cwt. 1 qr. of refined metal. This is the average consumption in a forge of sixteen furnaces worked by men of fair average ability. All circumstances being favourable, a ton can be produced with 20 cwt. 3 qrs. of metal. But taking the average of eighty-five furnaces over twenty-two years, we find the yield to average 21 cwt. 1 qr. 20 lbs.

The consumption of coal is subject to similar variation with a bituminous coal yielding much flame; the consumption with superior workmen will average 14 cwt. a ton of boiled iron bars. With a less inflammable coal it will rise to 18 cwt., and with the coals mined on the edge of the anthracite basin 22 cwt. is near the average. The weekly consumption of cole at the furnace is nearly the same, whatever varieties of iron may be under operation, so that with the kinds most difficult of conversion the yield a ton is increased in the same ratio as the make is reduced. Inferior puddlers will burn 4 to 5 cwt. a ton more than able men. The double boiling furnace effects a considerable saving of fuel if successfully managed. The yield of coal is nearly one-fourth less than with single furnaces.

The consumption of fuel in puddling refined metal is smaller than with pigs. With coal of good quality and suitable for the purpose the ton of puddle-bars is produced with a consumption of 10 cwt. only; proceeding, however, to the semi-anthracite coal district, the consumption rises to 17 and 18 cwt. a ton.

A more perfect combustion of the coal, resulting in a slight reduction in the quantity used, has been produced by introducing into the fire-place above the fuel atmospheric air for burning the gaseous products. This invention requires closed ash-pits for its successful application; the air supplied to the coal above and below the bars is heated in flues underneath and at the sides of the furnace. The mixing of the gases and air is effected by a perforated divisional bridge through which the heat passes to the body of the furnace. Irons melting at a low temperature have been worked with a considerable saving of fuel, but with the harder kinds the obstructions caused to the draught by the bridge renders the furnace less manageable, and the loss in the yield of iron is of far greater value than any saving of coal.

Figs. 4330 to 4332 are longitudinal sections of puddling furnaces with iron boshes, Fig. 4332 being an arrangement with boiler in flue; Figs. 4333, 4334, sections and plan of a furnace in the

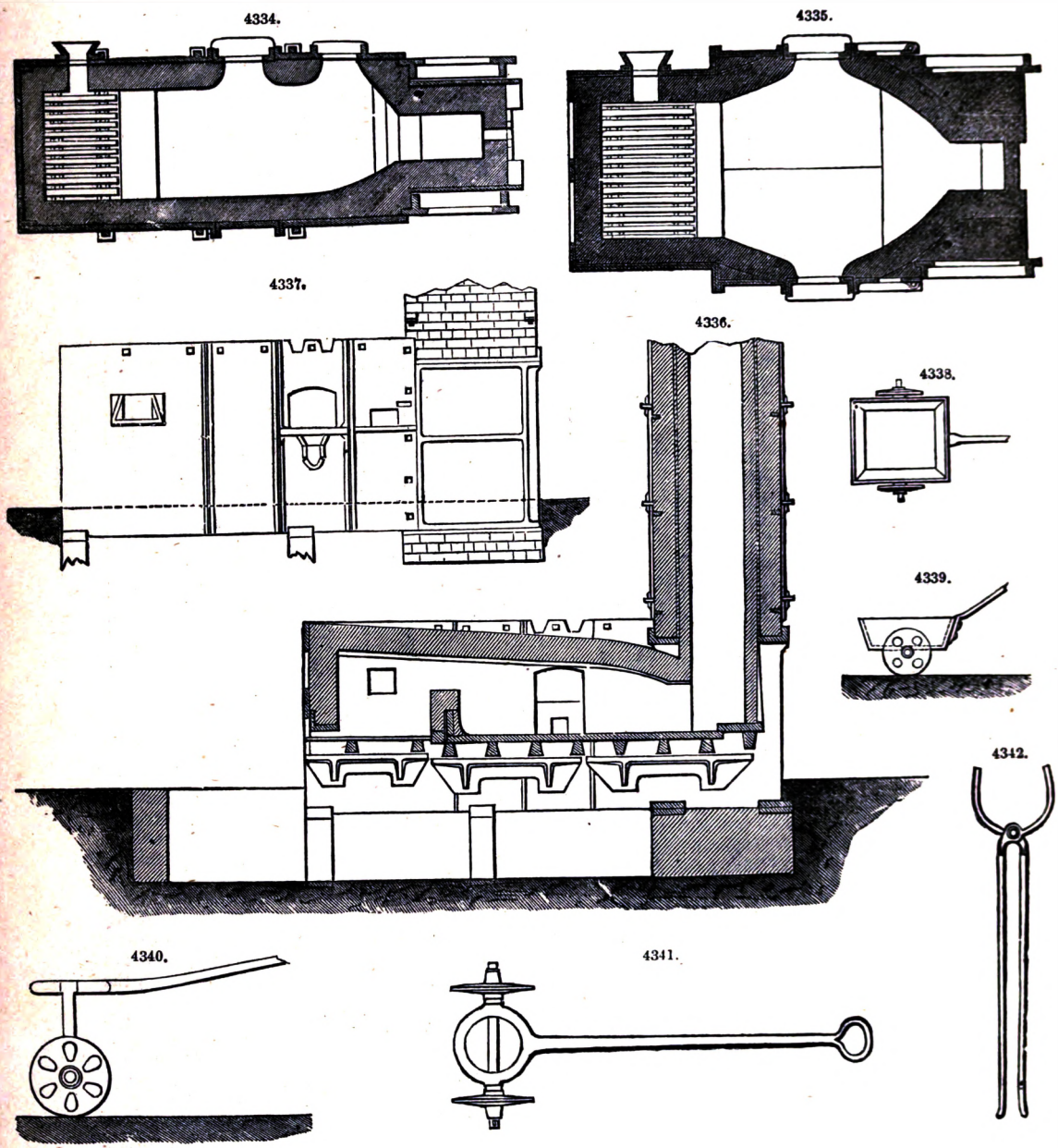

Cyfarthfa Iron-works; Figs. 4335 to 4337, plan, section, and side elevation of a common double puddling furnace; Figs. 4338, 4339, tub for cinder; Figs. 4340, 4341, carriage for conveying

puddling balls to squeezer or shingling hammer; Figs. 4342 to 4346, puddlers' tools; and Figs. 4347, 4348, section and plan of part of puddling forge—Dowlais Iron-works—showing arrangement of furnaces, coal and iron tramways, races, and so on.

The horizontal area of the chimney-flue at the junction of the stack with the puddling furnace

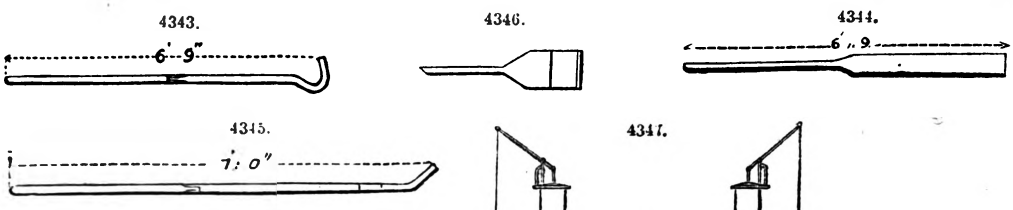

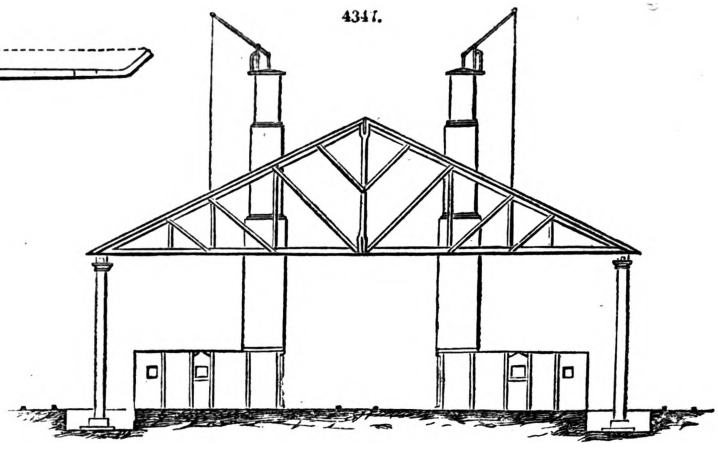

is mainly dependent on the character of the coal. With the highly bituminous varieties, which swell considerably during their combustion, and by lying close in the grate cause an obstruction to the draught, the flue in this place—or, as it is termed by builders, the take-up—is made about 18 in. square; the grate measuring 2 ft. 8 in. by 3 ft. 9 in. This is at the rate of 32 in. of flue to each superficial foot of grate. At the Hirwain Works, where the coal is of a semi-anthracite nature, producing little flame, and increasing very slightly in bulk during combustion, the take-up is 17 in. by 10 in. for grates 2 ft. 4 in. by 3 ft. 5 in.; equal to 21 in. to each foot of grate.

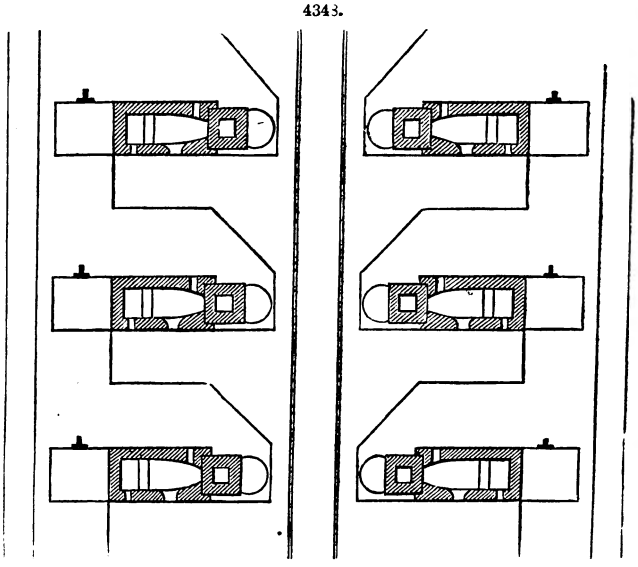

The area of the take-up is regulated also by the skill of the puddler. A good workman will prefer it contracted, but an inferior hand desires an increased area. To a workman less skilful in the manipulation of the iron, the enlarged area affords greater control over the draught, but at the expense of the iron under operation, a portion of which is thus oxidized and lost. The maintaining of the take-up unaltered is considered of the first importance with puddlers, and where it is constructed with fire-brick its enlargement after a week's work requires that it should be taken down and renewed. Sandstone, from its greater durability, has been adopted at some works. If the take-up be not reconstructed of the original size, the yield of metal becomes worse as the area is enlarged. Hence, with a forge of good workmen, we find that as the time approaches for repairing the yield of iron a ton is augmented.

The area of the grate is dependent, in a great measure, on the quality of the coals. At the Hirwain forges an area of 8 ft. is adopted as sufficient with their coal; but at the other forge belonging to the same works, and working iron from the same blast furnaces, we find the grates averaging 10 ft. in area. From the very different qualities of the coals, however, the lesser area of grate at Hirwain burns a greater quantity than the large grates at the Forest Works, although the area of the take-up in the latter furnace is nearly twice that in the former.

The make of a boiling or a puddling furnace is dependent on the skill of the puddler, the quality of iron operated on, and the general character of the coal. Where these are favourable the weekly make will not fall short of 21 tons, and the average may be estimated at 18 tons. This, however, is greatly above the production in some districts. The Staffordshire furnaces, for instance, do not usually average more than 10 tons weekly.

The lesser make of the Staffordshire furnaces may be explained by the shorter time they are at work, and the slower rate of working practised by the puddlers. In the Welsh district, with an abundant supply of the raw materials, iron and coal, the furnace is under work one hundred and forty hours weekly, the only stoppage being four hours on Saturday evening and the whole of Sunday. In Staffordshire the furnaces are lit on Monday evening and let out early on Saturday,

the working period seldom exceeding one hundred and four nours weekly. From keeping the furnaces longer at work each week the Welsh ironmasters are enabled to turn out a comparatively large quantity of iron with a limited number of furnaces. The yield of metal is believed to be improved, while there can be no question but that the yield of coal is considerably diminished. A certain quantity is expended every week in getting up the heat. The consumption in this way for each ton of iron will be in an inverse ratio to the weekly make.

The make of the double boiling furnace averages 36 tons weekly. Working on hot iron from the blast furnace the make is as high as 46 tons weekly. Similar furnaces at the Chillington forges, Staffordshire, produced about 28 tons weekly.

The make of puddling furnaces, working on all refined metal, depends very much on the skill of the puddler. With first-rate workmen, and iron and coal favourable, the produce will reach 28 tons; with inferior hands the make will be about 21 tons. Taking an average of eighteen years' puddling, Truran found that the make of puddle-bars from five forges was 23 tons a week for each furnace at work.

Puddling with wood is practised to a considerable extent in Sweden, the best furnace being that of F. Lundin, of Carlstadt Munkfors, Fig. 4349, designed for the consumption of turf and peat without drying, and of wet saw-dust or other moist fuel. A, Fig. 4349, is a pile of green saw-dust; B, hopper and cone; D, gas generator for green saw-dust; G, condenser; H, heating furnace with Siemens' regenerator: I I, valve-box; K, air-blast; N, regenerator for gas; P, regenerator for air; S, chimney, 43 ft. high; T, blast throttle-valve; X X, dampers to regulate issuing gas; Y Y, 3500 lbs. of iron in bars, cooled by the water from pipe Y Y, to cool the gas and precipitate the water; L, 45 per cent. of water; Z, water at 2°; at *e* the temperature is 20°, where it rises to 300°; at *s*, 300°; at *d*, 350°; at C, 400° to 420° C.

The temperature used to burn the gas, calculated from the cold air, is about 2000° C.

At R, lead melts slowly; at F, lead melts easily; at E, zinc sometimes melts; M, melting-point of cast iron.

V is the plan of the auxiliary furnace for first heating; W, the plan of the reheating furnace.

The gas, before condensation, contains 33 parts by weight of water to 100 of dry gas.

Constituents of Gas.

11·8	vol.	acid carbonic	19·6 weight.
19·8	„	oxide „	20·8 „
11·3	„	hydrogen	0·87 „
4·0	„	marsh gas	2·4 „
53·1	„	nitrogen	56·3 „

Same before as after condensation.

The furnace may be placed at a long distance from the condenser.

In this furnace the fuel is fed by a hopper into a reservoir, resting upon an inclined grate, supplied from below with air from a blower. The products of combustion thus produced pass through a condenser, where all the moisture in the gas is condensed. The gas then passes to the heating furnace, which is furnished with Siemens' regenerators. It is found easy to use fuel containing as much as 45 per cent. of water, the resulting gas contains about 33 lbs. of water to 100 lbs. of dry gas, and the water, after condensation, contains about 2 per cent. of its weight in gas, or 3 per cent. of its volume. The condensing apparatus consists of 3500 lbs. of iron bars piled crosswise on each other, and kept cold by a jet of water from a tuyere. The heat of the gas before condensation of the water always melts lead easily, and sometimes zinc. In the Ekman furnace dry wood containing 8 per cent. of water produces in the generators gas of a temperature of 1394°, while in the Lundin furnace the temperature is 2666°, the combustion in both cases being produced by cold air. The gas produced by seasoned wood contains more water than that which proceeds from the Lundin condenser. The duration of the furnace is very remarkable, and is to be attributed probably to the fact that there is no cinder. In eight weeks the thickness of the roof, 4 in., was only diminished from $\frac{1}{4}$ to $\frac{3}{8}$ in., and the side walls were entirely uninjured. So great is the success of this system of condensation, in connection with the Siemens' regenerators, that in Sweden, and in fact everywhere where moist fuel is employed, the Lundin furnace will supersede every other. Abram S. Hewitt considers that it is available for any kind of fuel whatever. In the United States it is believed that this arrangement might be employed advantageously for washing the gas obtained from mineral coal; but its chief merit consists in the fact that in mineral regions, far removed from coal-fields, it is possible to establish iron-works, using saw-dust or peat with success and economy. In the lumber regions of Lake Superior, says Hewitt, it will be found to have a special value, because there is an abundant supply of pig accessible to the saw-mills on Green Bay and in Michigan, producing enormous quantities of saw-dust, slabs, and waste timber

Siemens' Gas Puddling Furnace.—The fuel employed in this furnace, which may be of an inferior description, is separately converted into a crude gas, which, in being conducted to the furnace, has its naturally low heating power greatly increased by being heated to nearly the high temperature of the furnace itself, ranging to above 3000° Fahr.; undergoing at the same time certain chemical changes whereby the heat developed in its subsequent combustion is increased. The heating effect produced is still further augmented by the air necessary for combustion being also heated separately to the same high degree of temperature, before mixing with the heated gas in the combustion-chamber or furnace; and the latter is thus filled with a pure and gentle flame of equal intensity throughout the whole chamber. The heat imparted to the gas and air before mixing is obtained from the products of combustion, which after leaving the furnace are reduced to a temperature frequently not exceeding 250° Fahr. on reaching the chimney; thus great economy in fuel is produced, with other advantages.

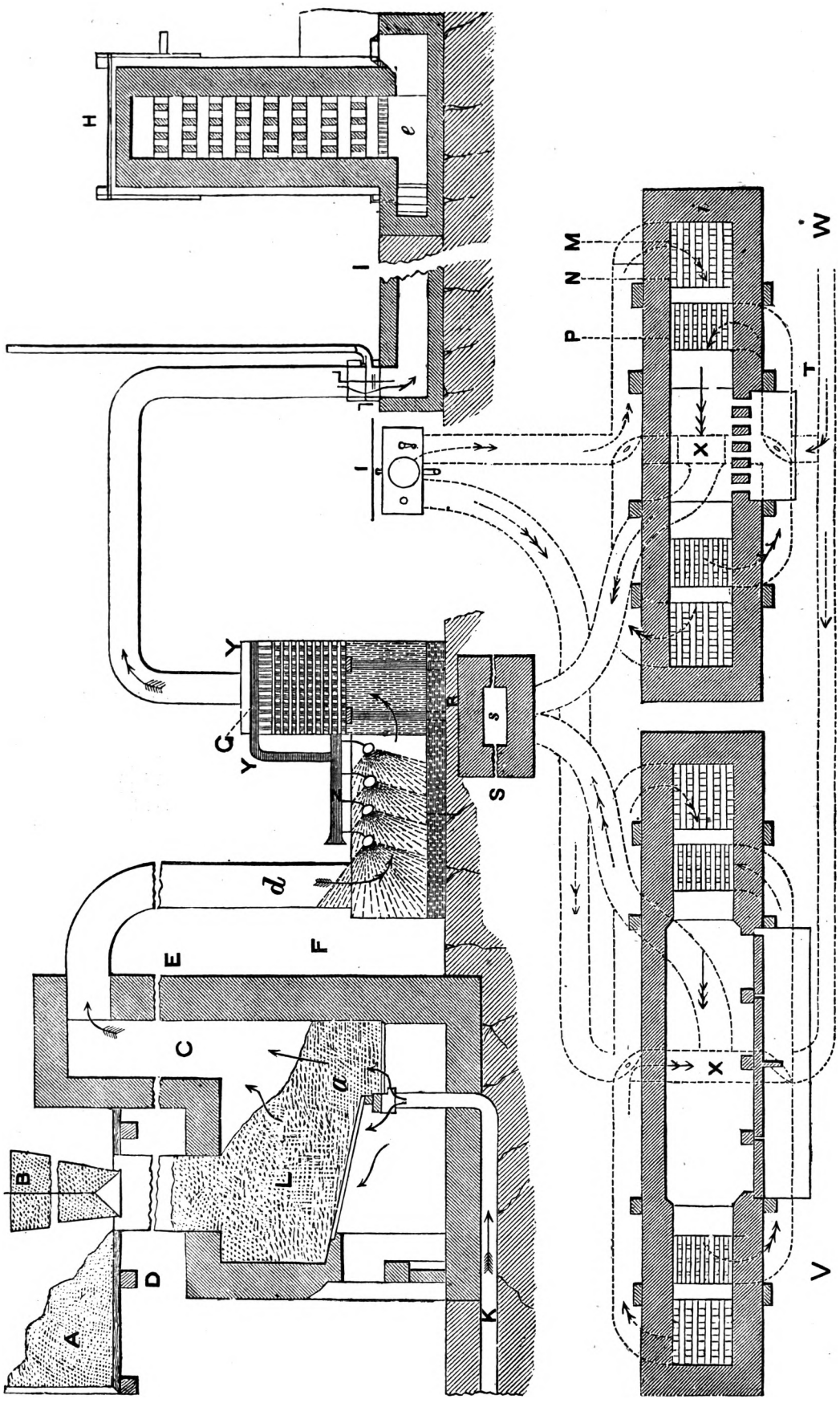
H
e
I
I
M
N
P
W
T
X
X
Y
Y
G
R
s
S
d
E
F
C
a
L
B
D
A
K
V

The transfer of heat from the products of combustion to the air and gas entering the furnace is effected by means of regenerators, or as Percy terms them, Accumulators.

The gas producer is shown in Figs. 4350 to 4352. Fig. 4350 is a longitudinal section, Fig. 4351 a front elevation and transverse section at the front, and Fig. 4352 a transverse section at the back.

4350.

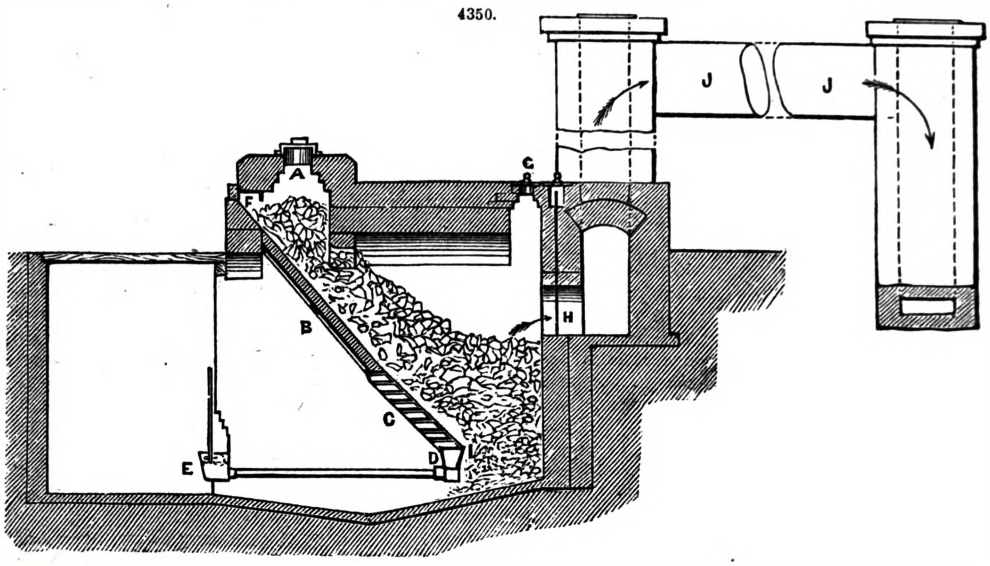

4351.

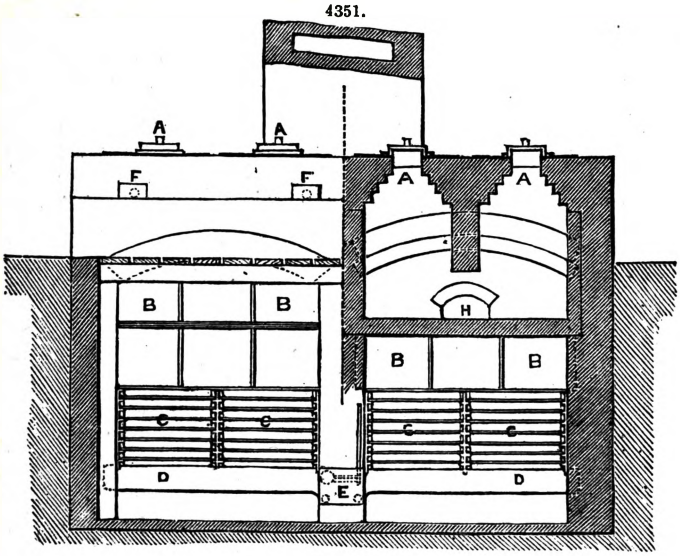

4352

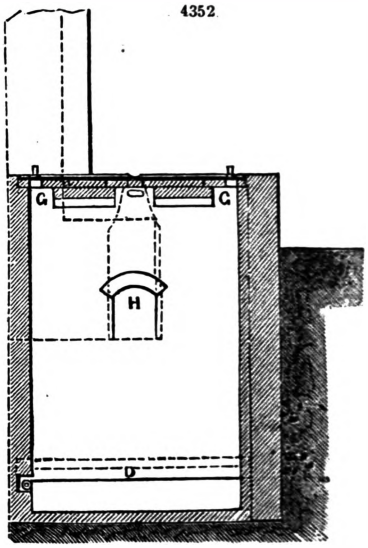

The producers are entirely separate from the furnace, where the heat is required, and are made sufficient in number and capacity to supply several furnaces. The fuel, which may be of the poorest description, such as slack, coke-dust, lignite, or peat, is supplied at intervals of from six to eight hours through the covered holes A, Figs. 4350, 4351, and descends gradually on the inclined plane B, which is set at an inclination of from 45° to 60° according to the nature of the fuel used. The upper portion of the incline B is made solid, being formed of iron plates covered with fire-brick; but the lower portion C is an open grate formed of horizontal flat steps. At the foot of the grate C is a covered water-trough D, filled with water up to a constant level from the small feeding cistern E, supplied by a water-pipe with a ball tap. The large opening under the water-trough is convenient for drawing out clinkers, which generally collect at that point. The small stoppered holes F F at the front and G G at the top of the producer are provided to allow of putting in an iron bar occasionally to break up the mass of fuel and detach clinkers from the side walls. Each producer is made large enough to hold about 10 tons of fuel in a low incandescent state, and is capable of converting about 2 tons of it daily into a combustible gas, which passes off through the opening H into the main gas-flue leading to the furnaces.

The action of the gas producer in working is as follows; the fuel descending slowly on the solid portion B of the inclined plane, Fig. 4350, becomes heated and parts with its volatile constituents, the hydro-carbon gases, water, ammonia, and some carbonic acid, which are the same as would be evolved from it in a gas retort. There now remains from 60 to 70 per cent. of purely carbonaceous matter to be disposed of, which is accomplished by the slow current of air entering through

the grate C, producing regular combustion immediately upon the grate; but the carbonic acid thereby produced, having to pass slowly on through a layer of incandescent fuel from 3 to 4 ft. thick, takes up another equivalent of carbon, and the carbonic oxide thus formed passes off with the other combustible gases to the furnace. For every cubic foot of combustible carbonic oxide thus produced, taking the atmosphere to consist of one-fifth part by volume of oxygen and four-fifths of nitrogen, 2 cub. ft. of incombustible nitrogen pass also through the grate, tending greatly to diminish the richness or heating power of the gas. Not all the carbonaceous portion of the fuel is, however, volatilized on such disadvantageous terms; for the water-trough D at the foot of the grate, absorbing the spare heat from the fire, emits steam through the small holes I under the lid; and each cubic foot of steam in traversing the layer of from 3 to 4 ft. of incandescent fuel is decomposed into a mixture consisting of 1 cub. ft. of hydrogen and nearly an equal volume of carbonic oxide, with a variable small proportion of carbonic acid. Thus 1 cub. ft. of steam yields as much inflammable gas as 5 cub. ft. of atmospheric air; but the one operation is dependent upon the other, inasmuch as the passage of air through the fire is attended with the generation of heat, whereas the production of the water gases, as well as the evolution of the hydro-carbons, is carried on at the expense of heat. The generation of steam in the water-trough being dependent on the amount of heat in the fire, regulates itself naturally to the requirements; and the total production of combustible gases varies with the admission of air. And since the admission of air into the grate depends in its turn upon the withdrawal of the gases evolved in the producer, the production of the gases is entirely regulated by the demand for them. The production of gas may even be arrested entirely for twelve hours without deranging the producer, which will begin work again as soon as the gas-valve of the furnace is reopened; since the mass of fuel and brickwork retain sufficient heat to keep up a dull red heat in the producer during that interval. The gas is, however, of a more uniform quality when there is a continuous demand for it, and for this reason it is best to supply several furnaces from one set of producers, so as to keep the producers constantly at work. The opening H leading from each producer into the main gas-flue can be closed by inserting a damper from above, as shown in Fig. 4350, in case any one of the producers is required to be stopped for repairs, or because part of the furnaces supplied are out of work.

It is important that the main gas-flue leading to the furnaces should contain an excess of pressure, however slight, above the atmosphere, in order to prevent any inward draughts of air through crevices, which would produce a partial combustion of the gas, and diminish its heating power in the furnace, besides causing a deposit of soot in the flues. It is therefore necessary to deliver the gas into the furnace without depending upon a chimney draught for that purpose. This could easily be accomplished if the gas producers were placed at a lower level than the furnaces, but as that is generally impossible, the following plan has been adopted. The mixture of gases on leaving the producers has a temperature ranging between 300° and 400° Fahr., which must under all circumstances be sacrificed, since it makes no difference to the result at what temperature the gas to be heated enters the regenerators, the final temperature being in all cases very nearly that of the heated chamber of the furnace, or say 2500° Fahr. The initial heat of the gas is therefore made available for producing a plenum of pressure by making the gas rise about 20 ft. above the producers, then carrying it horizontally 20 or 30 ft. through the wrought-iron tube J, Fig. 4350, and letting it again descend to the furnace, as shown by the arrows. The horizontal tube J being exposed to the atmosphere causes the gas to lose from 100° to 150° of temperature, which increases its density from 15 to 20 per cent., and gives a preponderating weight to that extent to the descending column urging it forward into the furnace.

4353.

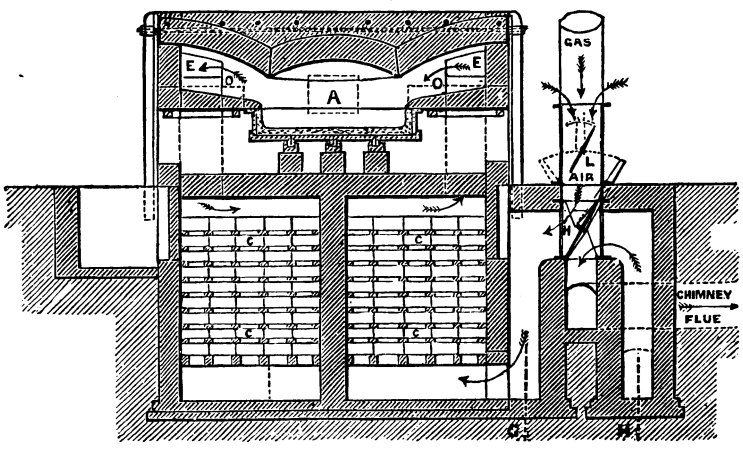

4354.

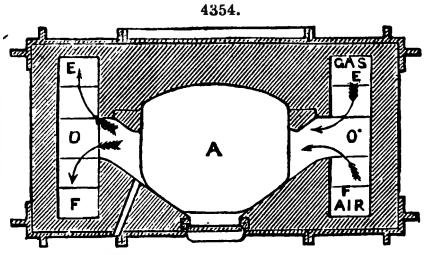

Figs. 4353 to 4358 represent a puddling furnace constructed on C. W. Siemens' plan. Fig. 4353 is a longitudinal section of the furnace; Fig. 4354 a sectional plan of the puddling chamber; Fig. 4355 a sectional plan of the regenerators; Fig. 4356 is a transverse section at the end of the furnace; and Figs. 4357, 4358, are vertical sections through the gas and air passages.

The four regenerators C are arranged longitudinally underneath the puddling chamber A, which may be of the usual form. In order to complete the combustion of the gas and air in passing through the comparatively short length of the puddling chamber, it is necessary to mix them

intimately. For this purpose a mixing chamber O, Fig. 4353, is provided at each end of the puddling chamber, and the gas and air from the regenerators are made to enter the mixing chamber from opposite sides, as shown in Fig. 4356; the gas aperture E is placed several inches lower than the air aperture F, so that the lighter stream of gas rises through the stream of air while both are urged forward into the puddling chamber, and an intense combustion is produced. The mixing chambers O are sloped towards the furnace, as shown in Fig. 4353, in order to drain them of any cinders which may get over the bridge. The reversal of the current through the furnace is effected about every hour by the reversing valves H and J in the air and gas flues, the arrangement of which is exactly similar to that in Siemens' glass furnace; the supply of gas and air is regulated by the throttle-valves L, and the draught through the furnace by the ordinary chimney damper.

4355.

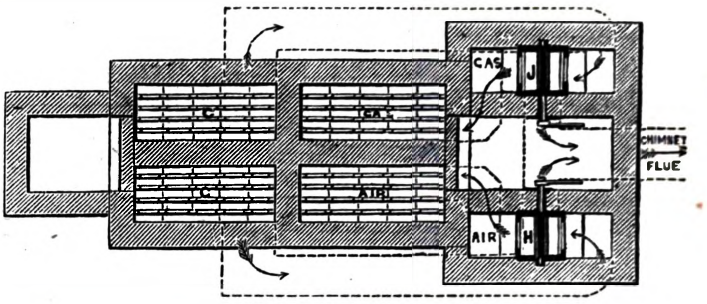

This same arrangement, with obvious modifications, may be applied also to blooming and heating furnaces, the advantages in both cases being a decided saving of iron, besides an important saving in the quantity and quality of the fuel employed. The space saved near the hammer and rolls by doing away with fire-places, separate chimney-stacks, and stores of fuel, is also a considerable advantage in favour of the regenerative gas furnace in iron-works. The facility which it affords for either concentrating the heating effect or diffusing it equally over a long chamber, by effecting a more or less rapid mixture of the air and gas, renders the furnace particularly applicable for heating large and irregular forgings or long strips or tubes which have to be brought to a welding heat throughout.

4356.

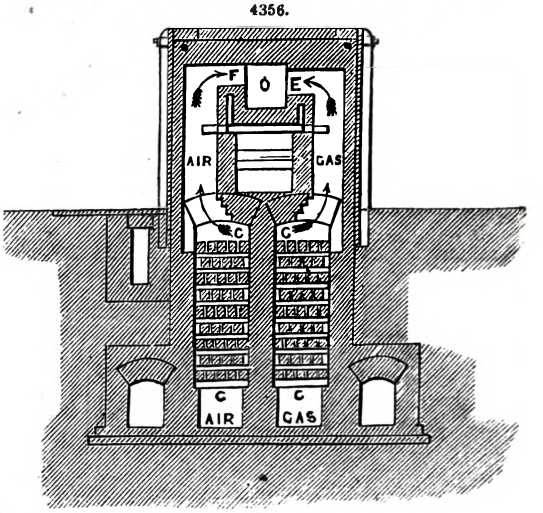

Many attempts have been made to apply machinery to the purpose of puddling iron, and relieving the puddler from the heaviest portion of his laborious work, but they have not been received with much favour, the most promising being an arrangement to rotate the rabble by means of a belt and pulley. Other attempts have been made to dispense with manual labour altogether in puddling by giving motion to the furnace itself, in order to produce the necessary agitation in the metal, and so render the use of tools nearly or altogether unnecessary. The plan that has been most successful is the invention of an American, Samuel Danks.

4357.

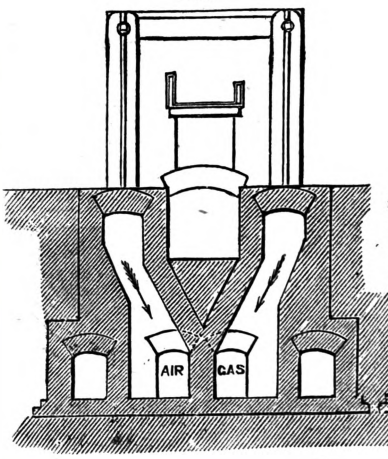

4358.

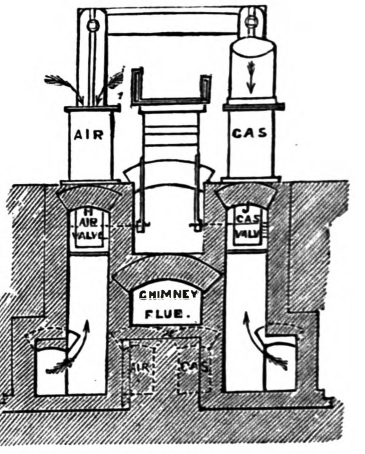

Fig. 4359 is a sectional elevation; Fig. 4360 a cross-section of revolving chamber; Fig. 4361 a horizontal section of revolving chamber; Fig. 4362 an elevation of movable end-piece and flue; Fig. 4363 a front sectional elevation of squeezer; and Fig. 4364 an end elevation of squeezer, of Danks' rotary puddling machine. R is the revolving chamber; M, movable piece; O, passage for gases; T, carrying rollers; N, tapping hole; S, stopper-hole, E, fire-hole; P, wind-pipe; W W, wind-jet pipes; *t*, bed-plate; *o o*, gear-wheels; *g*, fire-grate; *b*, grate-bar; *r*, standard; *p*, wind-valve; G G, grate-bars; 1, chimney-stack; 2, stationary flue; 3, bridge-ring; 4, fire-bridge; 5, suspension-rods, with swivels; 6 6, water-pipes; 7, water front

of movable piece; C C, Figs. 4363, 4364, bed-plates; D, squeezer-roll; C, squeezer-cam; F F, housing; G G, gear-wheels; B, steam-ram; A, steam-cylinder; *b*, head of steam-ram; D D, roll.

4359

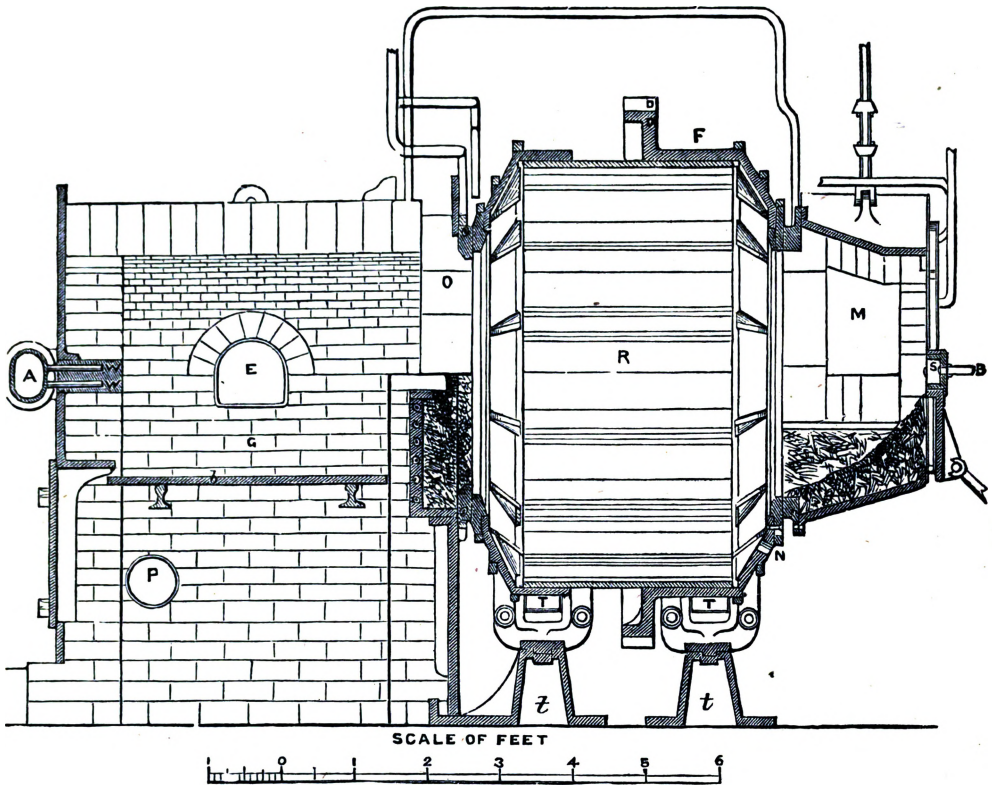

SCALE OF FEET

4360.

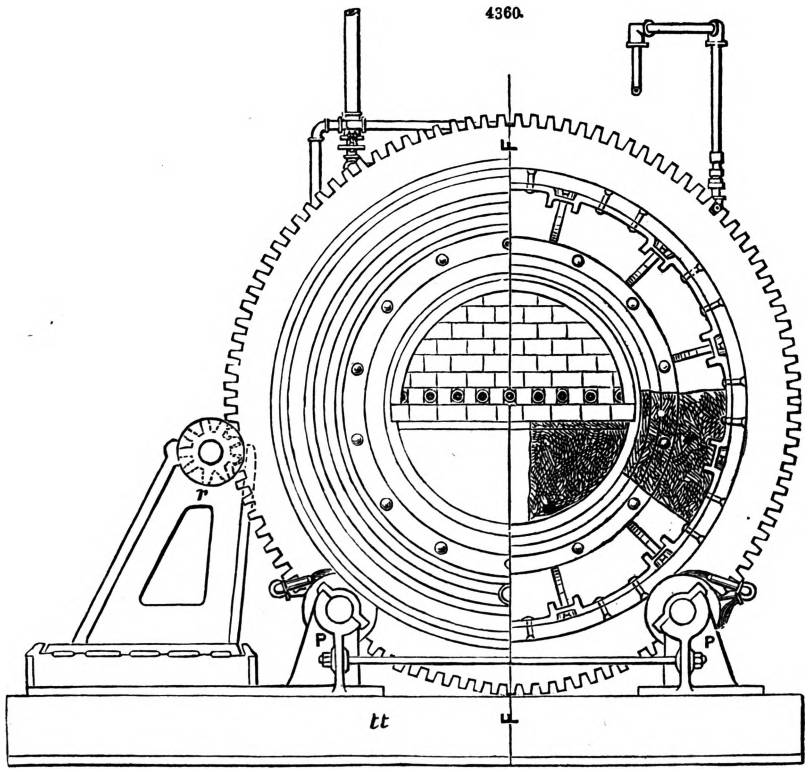

The furnace has a fire-grate, in outward appearance like the ordinary puddling furnace, but it differs from this considerably in several particulars. It has a fan blast under the grate, to urge the fire and produce gas. It has also jets of fan blast *over* the fire, injected for the purpose of ensuring the more perfect combustion of the fuel. This blast is regulated by a valve, by which the workman has a perfect control of the quantity of gas produced and consumed, and he is thus enabled to make the temperature suit the requirements of the charge in the different stages of the puddling process. The ash-pit and fire-hole are closed by doors, to prevent the escape of the blast through the fire, and the fire-hole has a coil of wrought-iron water-pipe cast into it, for the purpose of allowing a stream of water to circulate around it to keep it cool. The bridge-plate between the fire and the charge of metal has also a coil of water-pipe cast into it for the same purpose. It has

4361.

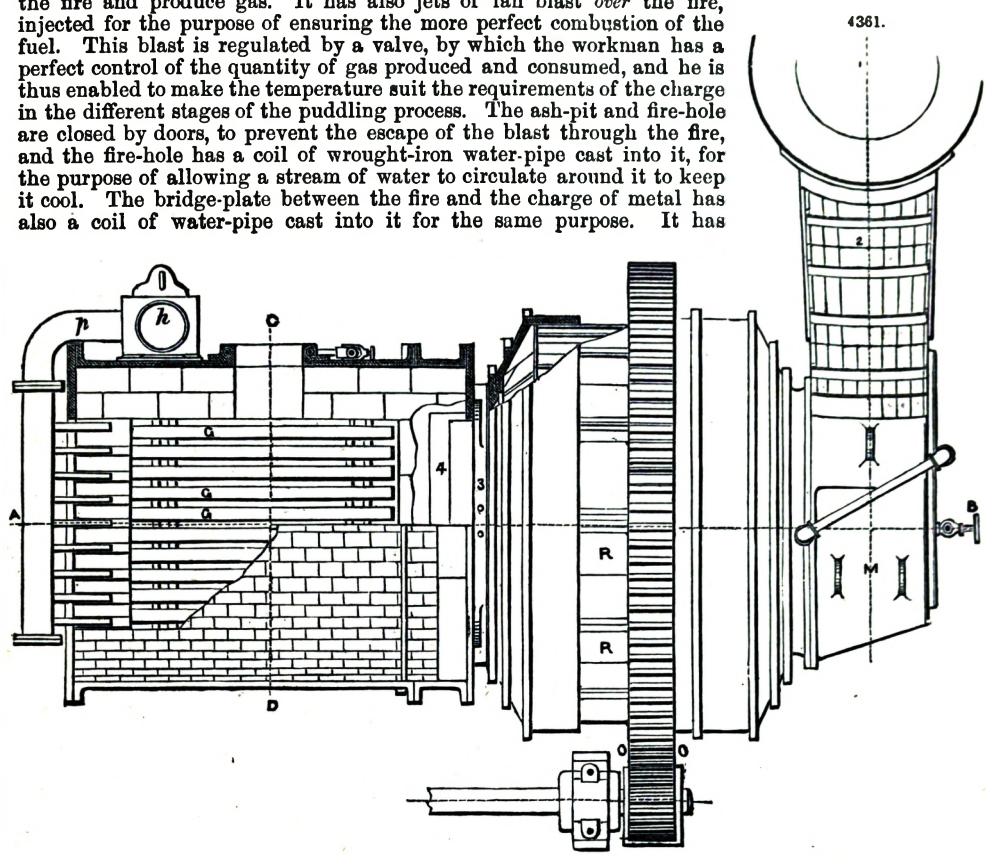

4362.

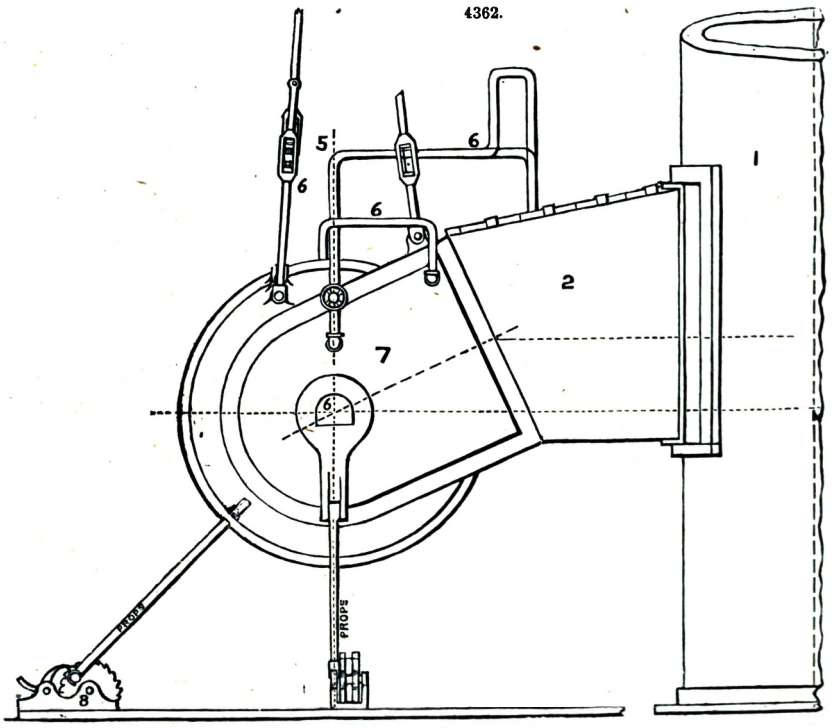

a lining of fire-brick on the side next to the fire, and a covering of fettling on the side next to the charge. It also has a course of fire-brick on the top, and is thus perfectly protected on all sides. Fastened on to the bridge-plate is a ring with a flat surface on one side, which ring has a pipe or pipes cast into it, and is made in one piece or in sections. The pipes are for the purpose of admitting water to keep the ring cool, and the flat face is the part that the end of the revolving furnace rubs against, and forms a butt joint. This face should be cast on a metal chill, to harden the part exposed to abrasion from the end of the revolving chamber rubbing against it.

4363.

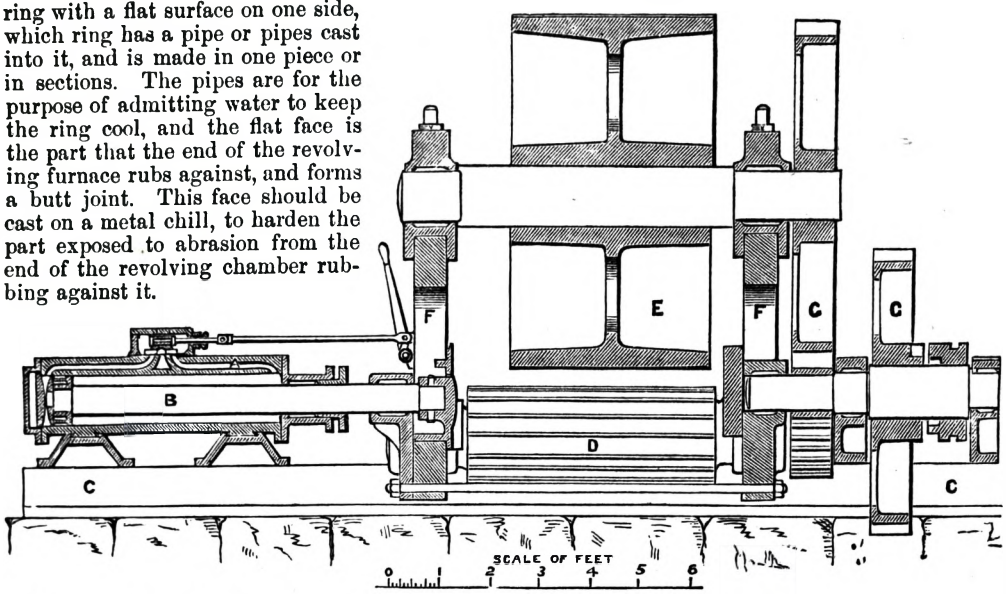

The revolving chamber is made of two end-pieces, so formed as to be banded with wrought-iron bands, and to have detachable rings on the part most exposed to the fire. It rests on carrying rollers, to allow its free rotation. It has also suitable ribs for strengthening it, and holes for riveting the rings and stave-plates upon it. These two ends are connected together by a series of stave-plates to form a cylinder, and are of suitable length according to the desired size of the chamber. They have hollow ribs, running longitudinally, which serve the double purposes of holding the fettling and keeping it cool, and when riveted together, form an open-ended cylinder, one end of which butts against the ring that is fastened to the bridge-plate, where the gases are admitted over the bridge from the grate, and the other open end serves the purpose of a doorway for the reception of the charges of metal, and for their removal; also for the escape of the products of combustion through a movable head-piece which connects the revolving chamber and the chimney. This movable piece answers the purposes both of door and flue. It can be moved at pleasure by means of a suitable apparatus overhead, and when in its place for puddling, the escaping gases pass through it into the stationary flue, and from thence to the chimney or boiler. When it is removed for the introduction or removal of the charge, the end of the revolving chamber is open, and balls of great weight can be very readily removed. When the movable piece is adjusted for puddling, it is held in position by suitable props. It has also an arrangement of water-pipes for keeping it cool, and a stopper-hole in front, so that the operations going on inside can be seen at all times.

4364.

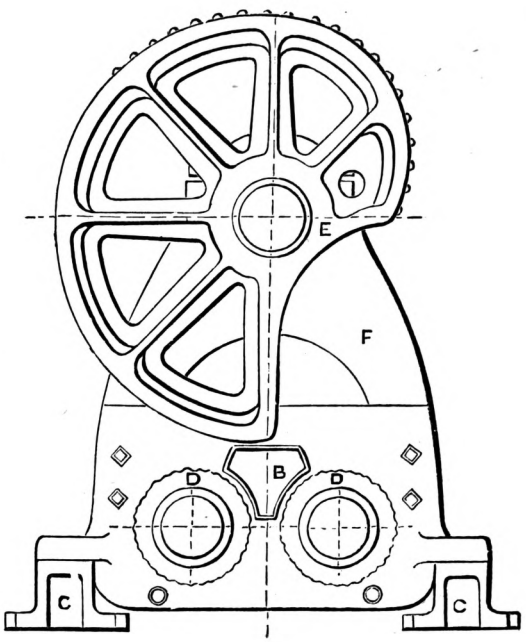

The vessel is made to revolve by means of a toothed wheel, fixed longitudinally upon it. A suitable engine is attached to each machine, so that the chamber can be made to revolve at any speed that may be required according to the different stages of the operation.

The chamber is lined in the following manner;—The initial lining is composed of a mixture of pulverized iron ore and pure lime, worked with water into the consistency of a thick paste. About one-third of the inner surface of the chamber is covered with this mortar in a layer projecting about 1 in. over the hollow ribs. After about four hours the first part of the lining, as described, will be found hard, and in the same way the remaining parts are filled in and are allowed to set. The furnace is then ready to receive the fettling. About one-fifth of the whole quantity required in the shape of pulverized iron ore is thrown in upon the above-mentioned lining. The furnace is

heated up, and is made to revolve slowly until the iron ore is found to be completely melted. The apparatus is then stopped, and that part of the molten iron ore, which has not been consumed by glazing the initial lining surface, runs to the lowest level of the furnace, and there forms a pool, into which there are put a number of small and large lumps of iron ore, of such dimensions as will be required to allow the said lumps to project over the surface of the liquid ore by from 2 to 6 in. This first part of the fettling is allowed to set, when a fresh quantity of pulverized ore is thrown in. The furnace is again made to rotate slightly until the newly-added ore is liquefied, when the apparatus is again stopped, and the pool is filled with lumps as before. In this manner the whole of the inner surface is gradually fettled, and care is taken to regulate the position of each pool, so that the vessel or apparatus shall at all times find itself properly balanced. From 2 to 2½ tons of iron ore are required to fettle a 700-lb. rotary furnace. Rather more than the ordinary quantity of hammer or rolled cinder is used, and upon that the iron is charged either in a solid or molten condition. When charged in the shape of pig iron, the melting down occupies from thirty to thirty-five minutes, during which a partial rotation is given to the furnace from time to time, in order to expose equally all sides of the charge to the flame. When the whole of the charge is thoroughly melted, the furnace is made to revolve once or twice a minute only during the first five or ten minutes, in order to obtain the most perfect action of the cinder upon the molten iron. A stream of water is injected through the stopper-hole along and just above the line of contact between the floating cinder and the inner surface of the vessel on the descending side. A certain portion of uncontaminated cinder is then solidified on the metal surface, and is carried down into or below the bath of molten iron in a continuous stream, which, in rising up through the iron, combines with the impurities of the latter. On the expiration of the five or ten minutes, the iron begins to thicken, and the motion is stopped. The heat is then raised, so that the cinder shall be perfectly liquefied, and float over the iron. That cinder contains all the impurities which have been liberated from the charge, and it is essential to prevent its further contact with the iron. The vessel is therefore brought into such a position that the tap-hole shall be just over the level of the iron, which by this time has become partly pasty. The puddler gently pushes back the iron, and the cinder is made to run off. The tap-hole, by a slight motion of the vessel, is then brought high enough over the level of the iron, and is stopped up. The heat is again raised, and the furnace is put in motion at a velocity of from six to eight revolutions a minute, by which means the charge is dashed about violently in the furnace. Should a sufficient degree of decarburization not have been produced at that point of the operation, then the liquidity which the iron will assume under the increased temperature will prove the fact. A high temperature being kept up, and the charge being continually turned over, the particles begin to adhere, when the velocity of the apparatus is lowered to from two to three revolutions a minute, upon which the ball then speedily forms. Should any loose pieces be detected in the furnace, the puddler moves them all to the same side of the ball, and by giving a partial rotation to the furnace he causes the ball to fall upon them, and thereby forms them into one mass. The puddler solidifies the front end of the ball by a few blows from a tool applied through the stopper-hole. The props of the movable piece are then removed, and the flue hanging from the overhead rail is moved away. A large fork, suspended from a crane, is moved into the vessel along one side, and the ball, which, by a turn of the vessel, is rolled on to the fork, is removed by means of a crane. The ball is then worked in a squeezer. The requisite quantity of cinder and metal is again charged. The flue is replaced, and the process continued. From eight to ten charges are made before any refettling is required, when the parts most worn are repaired. The bloom comes from the squeezer in a very solid condition, and is either reheated or rolled off into puddled bar, and so on, at once.

Whilst Danks was engaged perfecting his machine in America, Spencer was also actively at work in this country experimenting with a revolving puddling machine. Much labour has been expended in England in this direction, and no one has worked harder and been more indefatigable than Wm. Menelaus, the manager at Dowlais; in fact, he produced a machine almost identical with that of Danks, described in the Proceedings of the Inst. of Mechanical Engineers, June, 1867; but there was one difficulty he could not surmount, and that was finding a suitable fettling or lining for the interior of his furnace. Spencer has succeeded in overcoming this difficulty by using as a lining to his furnace the cinder produced by heating wrought iron in mill, balling, or other furnaces, technically called *best lap*. It is a very pure oxide of iron free from silica, and is easily reduced to the liquid state. The first puddling machine upon Spencer's principle was erected by himself at Richardson and Sons, West Hartlepool Rolling Mills, in 1870. Figs. 4365 to 4367 are of a second machine erected at the same works, capable of puddling 10 cwt. a heat. Fig. 4365 a general plan view of the fire-grate and stack, with the converter on revolving chamber between them; Fig. 4366 is a longitudinal vertical section of these; and Fig. 4367 is an end elevation of the revolving converter on its roller carriage. *a* is the fire-grate, similar in construction to those of ordinary puddling furnaces, and can be worked with an open grate, or with blast if required, a culvert *b* being provided for its introduction. The bridge end of the grate terminates in a cylindrical orifice *e* opening into the converter. The stack *d* has also an orifice, neck, or throat *e*, leading thereto out of the converter. Near the bottom of the stack is a door *f* with a spy hole f^x, through which the operation of conversion can be observed. By inspecting the end elevation, Fig. 4367, it will be noticed that the interior of the converter is composed of four sides arranged in the form of a regular square, and has two ends. Instead of the square, a figure of three or more sides may be substituted, and it need not of necessity be a regular figure. The rhomboidal or skew disposition of the sides with relation to the longitudinal axis of rotation, as shown in Fig. 4365, is preferred; but it does not constitute a feature of the invention, excepting in combination with the forms described.

The converter is a box-like vessel with circular openings g^x, h^x, in its ends *g*, *h*, corresponding and communicating with the circular openings *c* and *e* from fire-grate and into stack. The ends *g*, *h*, are circular vertical plates of cast iron, with rims, flanges, and ribs thereon, and with the open-

4365.

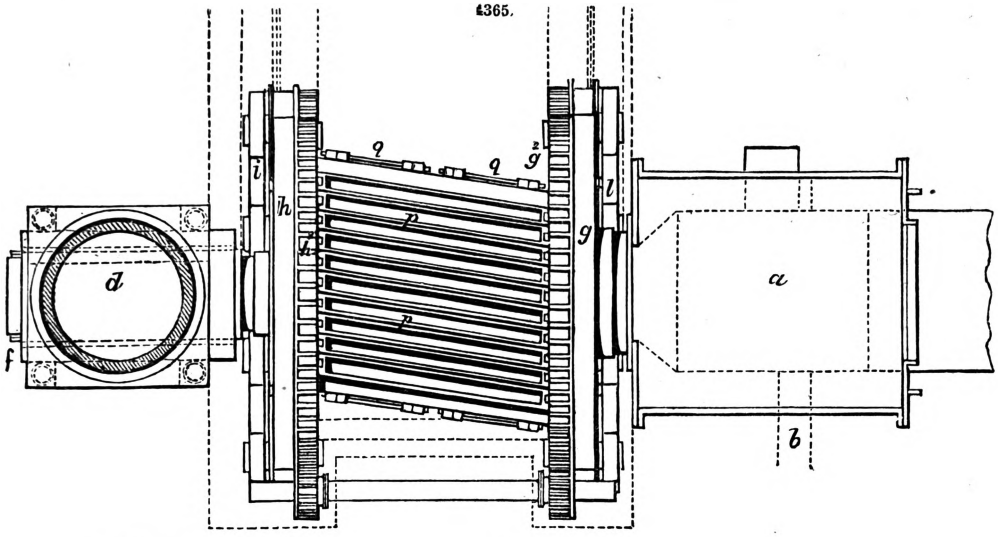

4366.

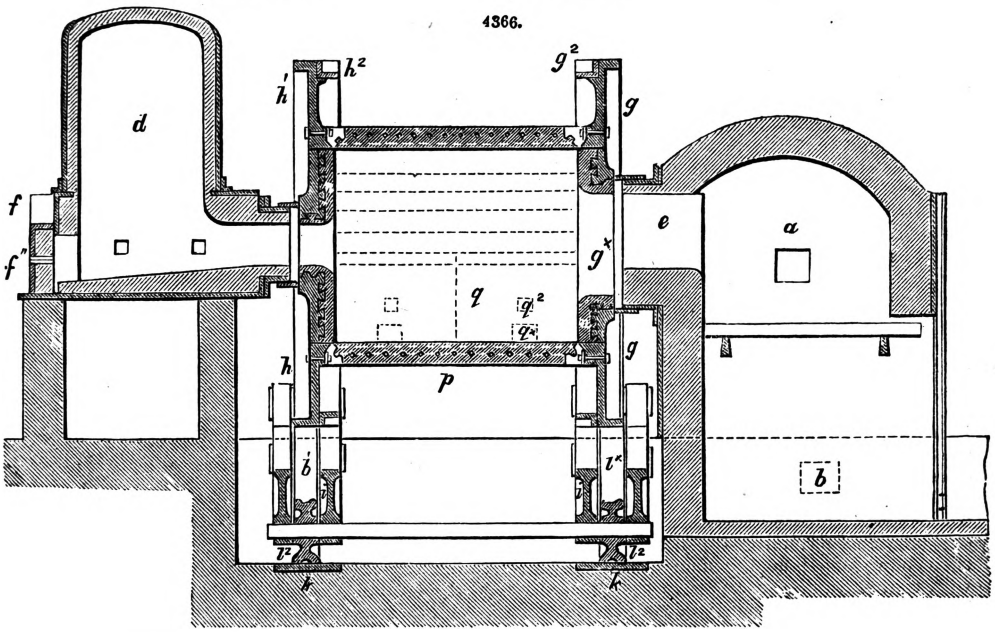

ings g^x, h^x, cast in. The outer flanges or rims enable the ends to rest and revolve upon the rollers i^x of the roller-carriage i, which, by means of its wheels i^2, is free to be easily moved upon the rail-plates k, and with the converter thereon bodily conveyed from the position shown between the stack and fire-grate for the purpose of fettling or repairs when required. g^2 and h^2 are large spur-wheels, secured to the end plates g and h respectively, for giving the revolving motion, and are worked from pinions, as at m in Fig. 4367, driven by a pair of small engines. The surfaces of the ends g, h, inside the converter, are cast with dovetailed honeycombings or

4367.

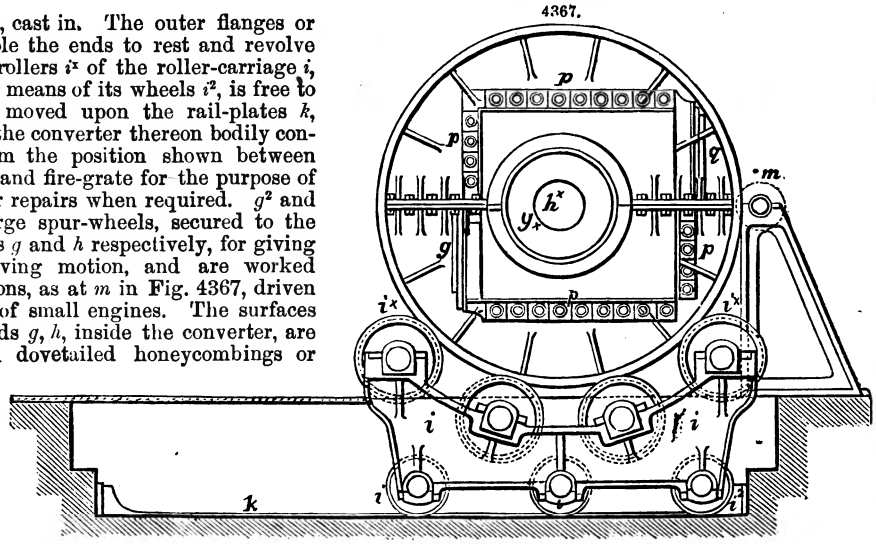

cells for holding the fettling n, as in Fig. 4366. The sides of the converter consist of skeleton cells, trays, or boxes p, lined with fettling and bolted to the ends g, h. On two opposite sides of the converter are hinged honeycombed doors q, having in them charging holes q^x and spy holes q^2, and these doors may be opened singly or together for the purpose of withdrawing the charge. To explain the revolving chamber clearly, yet briefly, in the inventor's own words, and without reference to the engravings, it is of the rhomboidal form, supported at the ends by large discs at right angles to the axis upon which it is made to revolve. The transverse section is square; longitudinally, two of the sides are parallel to the axis of rotation, and the other two sides, although parallel to each other, are pitched slightly diagonal; the diagonal throw is intended to give to the charge a motion from bridge to flue and the reverse. By the square form and diagonal sides the iron is made to travel over the whole surface in a very effectual manner, even if the speed of rotation be one to two revolutions a minute. Not only are the flat sides found the best for thoroughly agitating the iron, but for allowing the lining to be equally distributed upon the four sides, thus securing a uniformly smooth surface throughout the interior, which can be easily fettled with molten cinder or tap. Where the chamber is connected to the furnace grate and to the stack, loose rings are made to butt against it, allowing it freely to rotate, and very simply securing the joint; the rings are kept well up to their place by levers and balance-weights.

The fettling is secured to the interior of the revolving chamber in the following manner;—Each trough or honeycombed section is filled with molten tap before being placed in position, the ends are made up of tap bricks, cast into moulds of the required shape, and the whole is cemented together with molten tap, charged to the interior through the hole provided in the doors of the machine. The pig iron is first melted in a cupola and then introduced to the converter by means of a wrought-iron trough inserted at the door in the back of the stack, through the body of the stack and the neck of the furnace. The converter is made to revolve slowly, and the metal becomes thoroughly agitated, until it comes to the boil; the vessel is then shortly stopped for a time, and again set in motion, till the metal assumes the granular form and then balled, when it is ready to draw. The whole time occupied is about sixteen minutes.

Spencer has constructed another machine differing from that we have described, as will be seen on referring to Figs. 4368 to 4373. The grate is of ordinary shape and construction, but in size

4368.

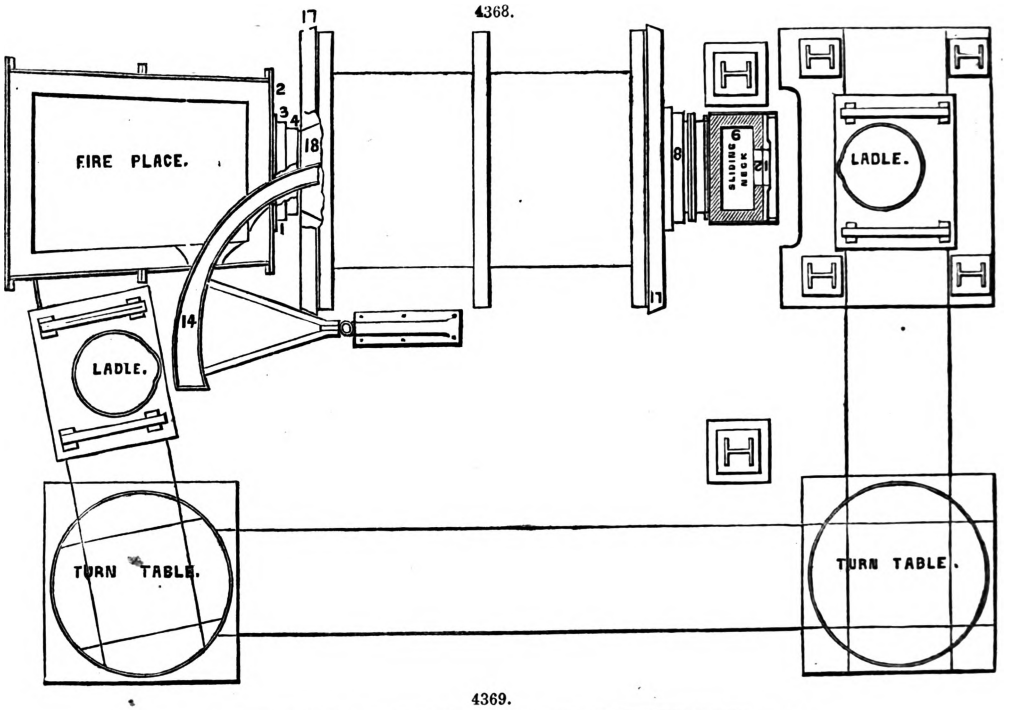

4369.

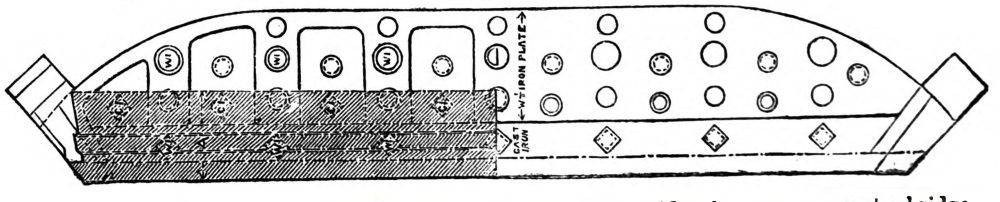

proportionate to the capacity of the revolving chamber. The bridge is a common water-bridge, open on the top and bolted on the end plate of the furnace. The bridge neck has a flange or ring upon it, for the double purpose of confining the brickwork immediately above the bridge, and for supporting a loose ring which serves to form a close joint between the fire-grate and the revolving chamber. The revolving chamber is a long square box, as in the centre of the machine just

described, but longer, the internal dimensions being, when fettled, 9 ft. 6 in. by 4 ft. 8 in. In the present machine all the sides are parallel to the axis of rotation, the advantage of this being that each side can be fettled with the motley cinder so as to have a perfectly level surface, of an even thickness throughout. The sides are composed of open trays or girders of cast iron, placed transversely instead of longitudinally, in order to resist the torsion when revolving. As in the former machine, it is supported at each end by a cast-iron disc, and on account of its greater size there is also in the middle of its length a third disc or ring on an additional support. These three discs which carry the chamber revolve on large rollers fixed on a strong frame and bed-plate beneath the machine. At the flue end of the chamber a movable neck, Fig. 4371, is placed, made of wrought iron, lined with fire-bricks, which forms the junction with the chimney, provided at the lower end with

4370.

4371.

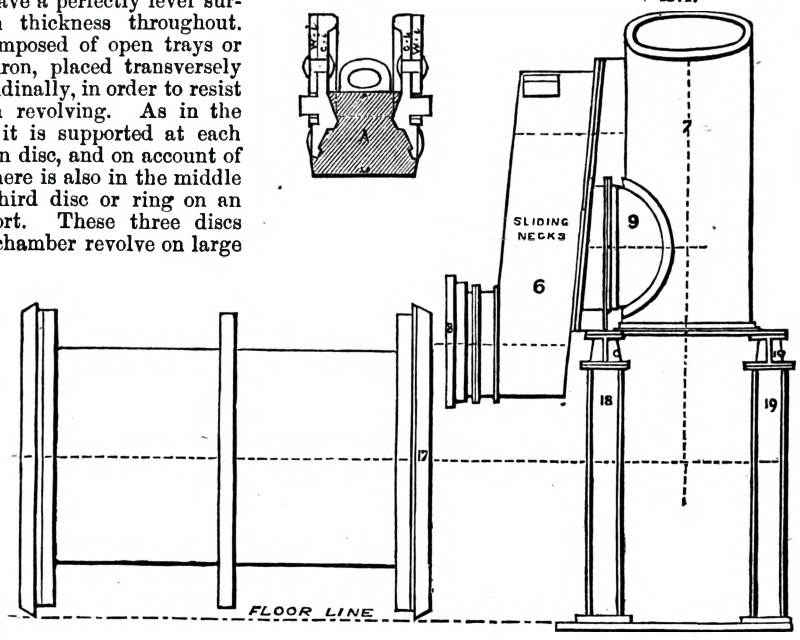

4372.

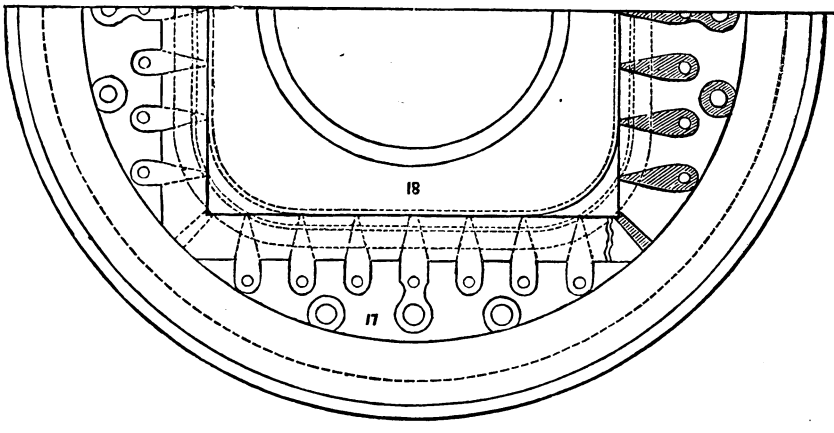

4373.

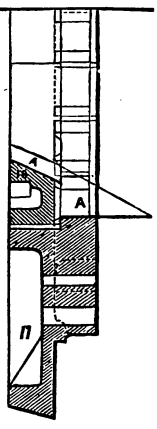

a cast-iron mouthpiece on its side corresponding with that of the sliding neck, and is supported upon girders and columns made sufficiently strong, with the intention ultimately of placing a boiler to utilize waste heat. The fettling, as before, is composed of mill tap, or mill tap mixed with pottery mine, purple ore, roll scale, or any other suitable oxide of iron cast into the sides, and is built in blocks properly moulded against the sides, the whole cemented together by molten tap into one smooth and regular form. This may be called the structural lining. The repairing is done by means of wrought-iron spouts which convey the molten fettling direct from the furnace or ladle to either end or sides, as may be required, and occupies about three minutes. The charge of iron is melted in a cupola, and then carried by a ladle or by a spout to the flue end of the revolving chamber. In the movable neck a small door is open which admits a spout mounted on wheels, which reaches over the joints and dips slightly, so as to allow the iron to run freely and lessen the height which it has to fall. Immediately the iron begins to flow the chamber is made to revolve slowly, thus preventing the iron eating into the bottom and at the same time hastening its conversion. The charging of a ton of iron occupies about three minutes. When completed the spout is withdrawn from the neck of the small door, closed, and the revolving of the chamber is continued. The boil begins in about five minutes, and continues from ten to fifteen minutes. The coming to nature, dropping, and falling, occupy ten or fifteen minutes more, if several balls are required. The operation going on inside the chamber is observed very carefully through spy holes in the neck, and when balls of a sufficient size are formed the machine is immediately stopped. Should the whole heat be wanted in one mass or ball, the chamber is allowed to continue revolving slowly, and firing kept well up for about ten minutes, when it

is found that one complete and well-formed ball is the result. The withdrawing of the heat is effected by a pair of long tongs mounted on rollers, attached by a chain to a small hauling engine. The movable neck is found to be a very complete and simple arrangement, as it may be raised or lowered just as easily as the door of the ordinary puddling furnace. The discs of the machine, Figs. 4365 to 4367, were each made of semicircles of cast iron, strongly flanged and bolted together, but the expansion occasioned by the heat soon convinced Spencer that bolts and bars were of little avail, and the discs, instead of remaining round, took a somewhat oval shape. This difficulty has been overcome in the machine, Figs. 4368 to 4373, by making the end discs into two perfect rings, fitting loosely one within the other, with sufficient space between them to allow expansion, the inner ring or centre-piece of each disc being kept in position by bolts passing through flanges provided for that purpose on both rings. It is also further strengthened by having strong hoops of wrought iron contracted on it. As it is of similar size and shape to the inside of the chamber, it absorbs the greater part of the heat, and thus relieves the outer ring of inside strains through expansion. The sides of the revolving chamber are made up of open trays of cast iron of girder form, with wrought-iron plates riveted on them, and held in position by bolts passing through them and through the discs, thus tying the whole together by wrought iron, capable of allowing of any expansion without danger of breaking. The next point is the movable neck or flue drawing, a very simple but effective improvement, and made to slide somewhat like a wedge between the aperture of the revolving chamber and the chimney. The wedge-shape is given to it for the purpose of allowing it to recede from the face of the chamber when lifted, and free itself easily from any cinder which might otherwise clog the joint. Weighted levers give it the requisite pressure, when the machine is in motion, to keep the joints quite tight without the use of wedges, screws, or luting, at the same time admitting it with ease to serve the purpose of a door and screen, and may be opened wholly or partially, as may be necessary, when the heat is being drawn; but as it is most frequently required in such cases to be only partially opened, it still admits of heat being carried to the chimney, or boiler, if there should be one applied to the furnace. It will be noticed that in this machine Spencer has dispensed with the diagonal throw which his former machine had. Immediately on the neck being lifted, a frame upon wheels, carrying a nicely-balanced tongs, is advanced to the doorway and made to grip a ball; the whole is then steadily drawn back by means of a chain attached to the small hauling engine. This process is repeated until the chamber is discharged.

Hammers and Squeezers.—The puddle-balls are delivered by the helper puddler to the shingler, who shapes them into blooms preparatory to passing them between the puddling rolls.

The operation of blooming was formerly performed with heavy hammers; these consolidated the balls by repeated blows, and expelled a large portion of the cinder. During the hammering the bloom was placed endways, receiving a couple of blows in that position to upset it, or condense the particles of metal longitudinally. It is generally considered that where quality is an object, no substitute has been discovered for the hammering. But in yield, the principal object looked to in the manufacture of much of the bar iron of the present day, the modern reciprocating squeezer is superior.

4374.

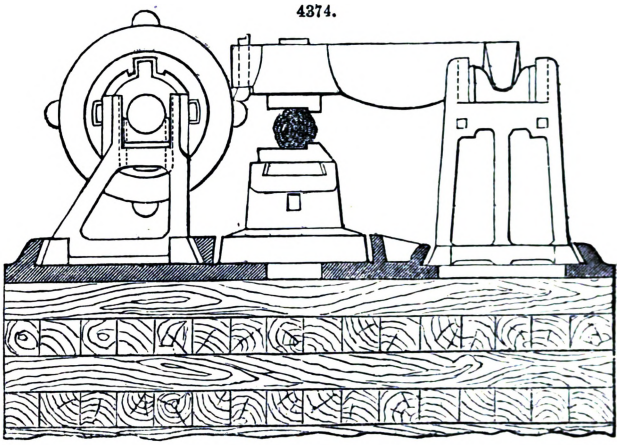

4375.

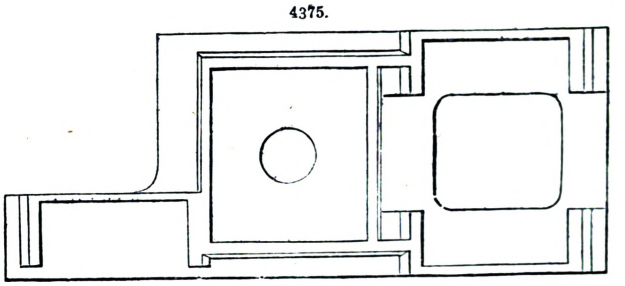

The substructure of a forge-hammer, Figs. 4374, 4375, usually consists of a solid timber bedding, containing from 1000 to 1500 cubic feet of oak, capped by a cast-iron bed-plate, shown in plan, Fig. 4375, measuring about 24 ft. by 7 ft., and weighing from 10 to 12 tons. Two standards, weighing about 3 tons, for carrying the helve are fixed on the bed-plate in strong jaws, and a third, also of nearly equal weight, for carrying the cam-ring shaft. The helve is T-shaped in plan, and measures about 8 ft. long by 6 ft. wide at the centre of vibration, and 2 ft. deep by 12 in. wide in the middle. It weighs from 5 to 7 tons. At one end it has a recess for receiving the hammer-face, which measures 18 in. square at the lower side. Standing on the bed-plate, under the centre of the hammer-face, is the anvil-block, weighing from 5 to 6 tons, having an anvil-face on its upper side similar to the hammer-face. The helve and its hammer are lifted by a revolving cam-ring, 5 ft. in diameter, having wipers or catches on its circumference; these catch in the point of the helve, lift it up, and pass around, permitting it to fall again on the bloom under operation.

Referring to Figs. 4376 to 4388. Fig. 4376 is a cross-section of harness-block, with end view of helve; Fig. 4377, plan of harness-block · Figs. 4378, 4379, section and plan of cam-shaft bearing

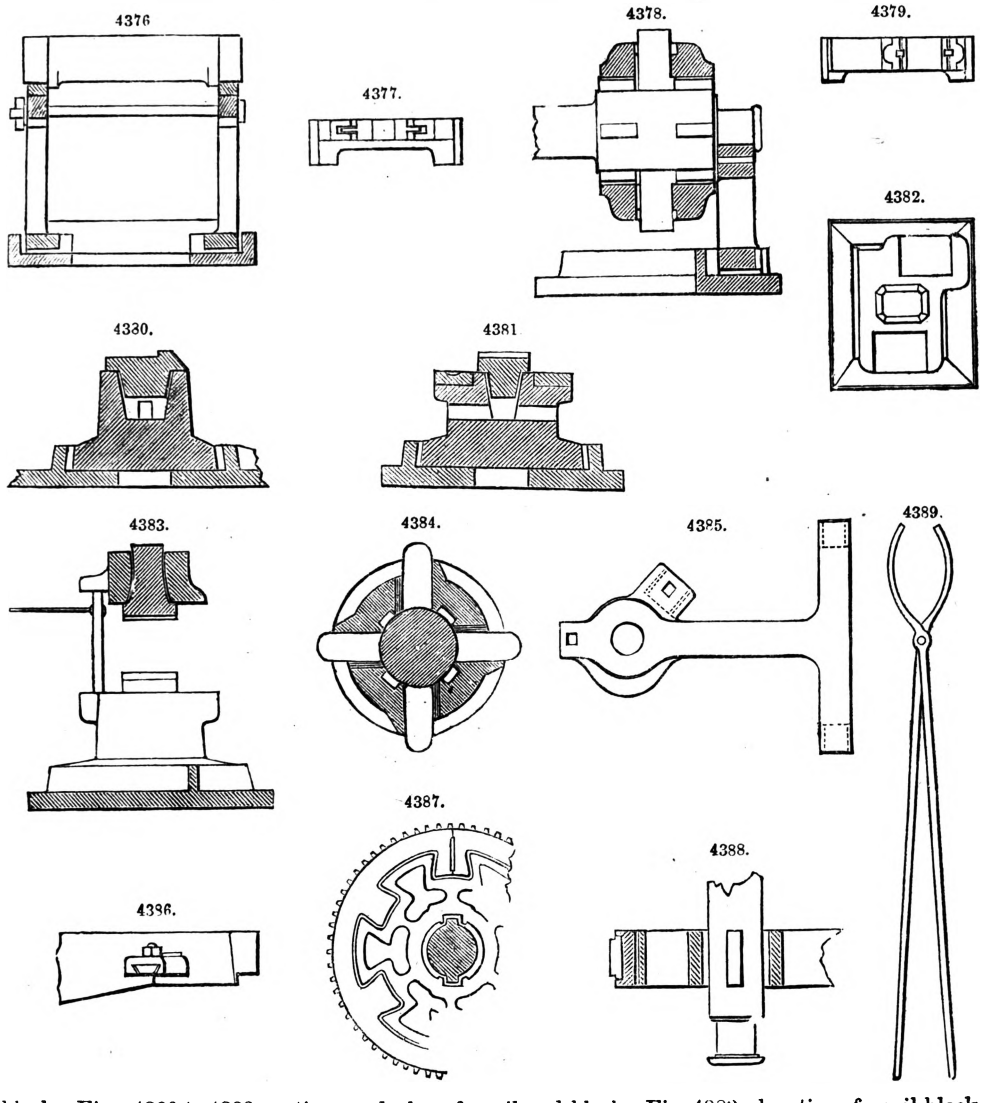

block; Figs. 4380 to 4382, sections and plan of anvil and block; Fig. 4383, elevation of anvil-block, showing sectional helve supported on jack; Fig. 4384, cross-section of cam-ring; Fig. 4385, plan of helve; Fig. 4386, side view of helve-head; Figs. 4387, 4388, elevation and section of driving wheels; Fig. 4389, shingling tongs.

The great strength of these hammers, and the weight of the blows given, may be partly understood from the weight of the castings used in the construction of one of medium size;—Bed, 11 tons; helve-standards, including brasses, 3 tons; helve, 5 tons 10 cwt.; hammer-face, 15 cwt.; anvil-block, 5 tons 10 cwt.; anvil-face, 16 cwt.; standards under cam-ring shaft, 2 tons 10 cwt.; cam-ring shaft, 12-in. bearings, 2 ft. 4 in. diameter in the middle, 7 tons; cam-ring, 4 tons 5 cwt.; four wipers, 24 cwt.: total, 41 tons 10 cwt.

When not working, the helve was propped up clear of the cam-ring on an iron bar made to fit under a projection cast for that purpose. The puddle-ball having been placed on the anvil-face, the helve is lifted off the prop by a boy holding a small iron block underneath the point, and so bringing it within the action of the wipers; the prop being withdrawn, the helve descends on the ball to be again lifted by the succeeding wiper. The height of the lift depends on the relative position of the helve and cam-ring, and provision is made in the standards for any alteration that may be deemed necessary; for a hammer of the dimensions described, the lift would average 16 in. The gearing on the cam-ring shaft in connection with the engine or other prime mover, is proportioned to eighteen or nineteen revolutions of the cam-ring a minute; consequently, with four wipers in the cam, the number of blows ranges from seventy-two to seventy-six a minute. The puddle-balls receive from fifteen to twenty-five blows, occupying from eighteen to thirty seconds, to convert them into blooms.

Figs. 4390, 4391, are an elevation and plan of a double squeezer; Figs. 4392, 4393, sections of the squeezer-arm through gudgeon and through the hammer; Fig. 4394, end of squeezer-arm, showing gudgeon.

The squeezer has now almost entirely supplanted the hammer in the forge. Its first cost is not half so great, the cost of maintenance is diminished in a similar ratio, and if the quality of the iron

4390.

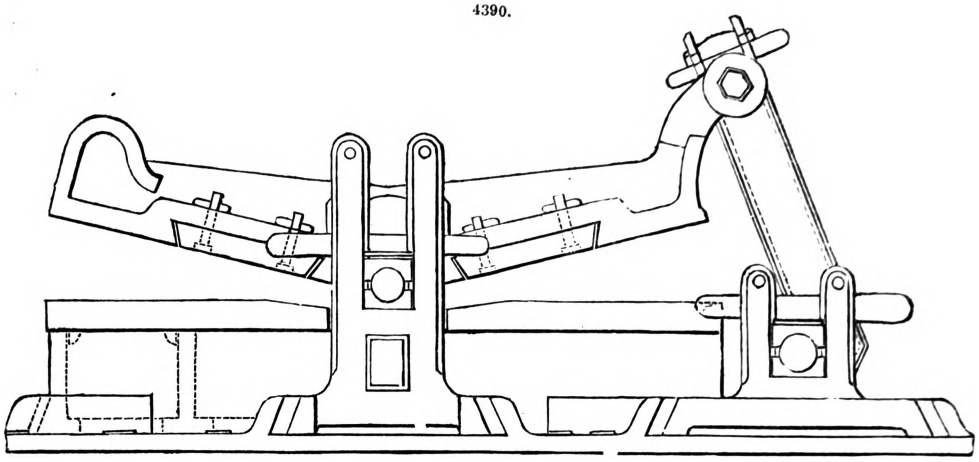

4391.

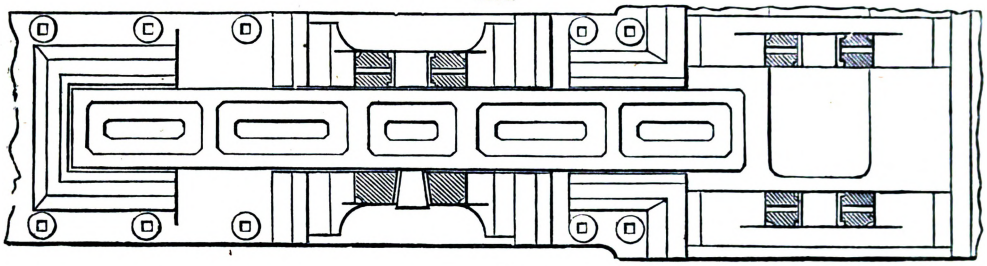

4392.

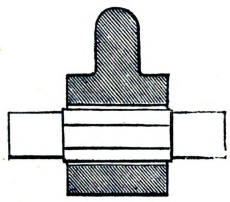

4395.

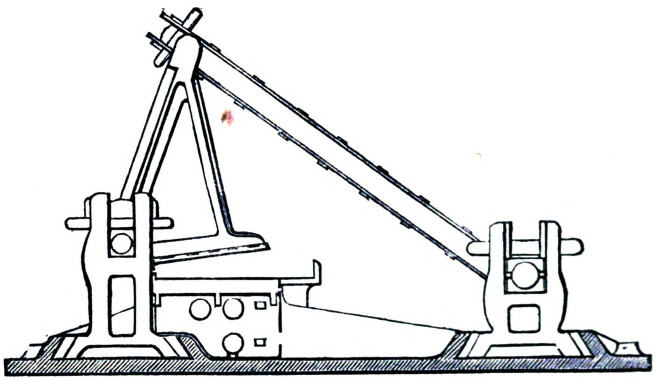

4394.

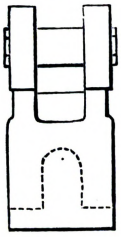

4393.

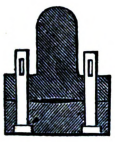

4396.

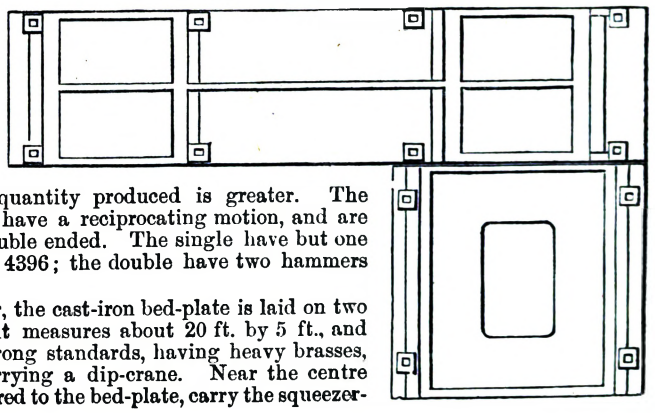

treated is not improved, the quantity produced is greater. The squeezers commonly employed have a reciprocating motion, and are distinguished as single and double ended. The single have but one anvil and hammer, Figs. 4395, 4396; the double have two hammers and two anvils.

For a double-ended squeezer, the cast-iron bed-plate is laid on two longitudinal balks of timber; it measures about 20 ft. by 5 ft., and weighs 6 tons. On one end strong standards, having heavy brasses, are securely fixed to it for carrying a dip-crane. Near the centre two other standards, firmly secured to the bed-plate, carry the squeezer-

arm. This consists of a V-shaped lever moving on a centre gudgeon, one of its ends being connected by a sweep-rod to the crank. Recesses are cast in it to receive hammer-faces, 3 ft. long by 1 ft. 6 in. wide. On the bed-plate a strong horizontal frame carries the two anvil-faces, each measuring 6 ft. by 18 in. When the lever is mounted and in a horizontal position, the inside end of each hammer-face will be 5 in., and the outer end 16 in. from the anvil-face. If the crank has a 16-in. stroke, these distances will be diminished to 4 and 11 in. respectively at the bottom centre, and increased to 6 and 21 in. at the top centre.

The weight of the various pieces composing a double squeezer such as we have described may be stated as follows;—Bedding, 6 tons; crank-shaft standards, 2 tons 10 cwt.; crank, 12 cwt.; standard under anvils, 4 tons; centre standards, 2 tons 16 cwt.; squeezer-arm, 3 tons 5 cwt.; anvils, 1 ton 16 cwt.; hammers, 14 cwt.: total castings, 21 tons 13 cwt.

The puddle-ball is delivered by the helper puddler to the shingler, who moves it forward on the squeezer-anvil until it arrives in contact with the hammer-face. At each stroke of the squeezer-arm the ball is flattened by the pressure, and a portion of the cinder expelled; during the up stroke it is turned over by the shingler towards the fulcrum of the arm, where it is reduced to a bloom about 5 in. in diameter by 18 in. long, after having received in its progress from fifteen to twenty strokes. The upsetting is performed at the extreme end of the squeezer, where its elevation above the anvil gives sufficient height for the bloom to be set up on end and pressed.

The squeezer-crank revolves from forty-five to eighty times a minute, according to the speed at which the rolls are set; the last is a high speed; fifty-six to sixty revolutions is more advantageous. The time occupied in squeezing each ball averages twenty-five seconds when the crank revolves sixty times a minute, giving twenty-five blows altogether to each bloom.

The hammering and squeezing processes differ from each other, inasmuch that in the former the ball is shaped by the impact of the descending hammer; whereas in the latter, the object is attained by simple pressure. In erecting a hammer the chief requisites are a foundation that shall withstand the concussion, and machinery capable of lifting and supporting the helve at the rapid rate of working practised. For this purpose the castings are made very heavy, and weigh above 40 tons, of which nearly 19 tons are in motion. In the construction of the squeezer, the tensile strength of the cast iron employed is severely tried. The crank and centre standards, sweep-rod, and squeezer-arm are subject to enormous strain, and require to be made proportionately strong. From the experience obtained in the working of nine puddling forges, we learn from Truran that the aggregate sectional area of the crank-standards in their weakest place should not be less than 136 in.; the centre standards, 212 in.; and the wrought straps on the sweep-rod, 12 in.

With the weights and proportions given, the duration of the respective moving parts is, for a forge of sixteen furnaces;—Squeezer-arm, ten months; anvils, six months; hammers, eleven months; cranks, three months; brasses to cranks, three weeks. The duration of the hammers and anvils may be increased by casting in them a small wrought-iron pipe bent in a serpentine form for keeping them cool by a current of water, and thus preventing the adhesion of the cinders. The inlet and outlet pipes of the hammer are brought over the centre gudgeon where the vibration is least, and united by a flexible connection to other pipes. By using water in circulation through them, the hammer and anvil will work nearly twice the usual quantity of iron before requiring renewal.

Motion is usually communicated to the squeezer by coupling the crank direct to the end of the bottom roughing roll of the puddling train; in a few works shafting, independent of the rolls, is employed, and the squeezer driven at a reduced speed. The strain is taken off the rolls in this arrangement, but the greater number of bearings in motion and the additional spur-gear increase the resistance to the working of the forge, and probably balance any advantage that might otherwise accrue from a separate connection.

The connection of the squeezer-crank with the end of the roll ought at all times to be made by means of a connecting spindle, as long as circumstances will allow. Connecting direct to the roll end is objectionable, though it is generally done; the lifting of the squeezer-crank causes the roughing rolls to wear unequally, and throws an unnecessary strain on the necks. By employing an intervening spindle this is avoided, and the durability of both rolls and crank is increased. Greater facilities are also afforded by this arrangement for changing rolls, and the stand for the rougher is made more durable by keeping the squeezer farther off. In a forge where the cranks were connected by crabs directly to the roughing rolls, placing a short spindle between increased their average duration from six weeks to five months.

Various modifications of, or substitutes for, the common lever squeezer have been brought out from time to time, and used to a limited extent. The first in the list was an American invention. It consisted of a circular cast-iron well, containing a revolving cylinder of equal depth, placed eccentrically; the least distance between the two was equal to the diameter of the finished bloom, while at the widest the breadth was equal to the diameter of the largest size ball. Motion having been communicated to the inner cylinder by strong bevel-gearing in connection with the engine, the ball is placed in the machine, the inner cylinder, armed with short teeth on its circumference, seizes it, and during its revolution, by a combined squeezing and rolling motion, the ball is reduced to a bloom of the desired dimensions, and delivered at the opposite side to the rougher.

This machine is, taken altogether, a specimen of great ingenuity, but in practice the bevel-gearing and the liability to derangement are great drawbacks to its employment; besides which no effectual means are provided for the upsetting of the bloom, an operation which cannot be dispensed with if the quantity is to remain unimpaired.

An apparatus of a similar kind working vertically is also in use in a few works, Fig. 4397. The revolving cylinder is mounted on two strong cast-iron frames, between which a semi-cylindrical casting is fixed eccentrically to the cylinder. The conversion of the ball into a bloom is effected in the same way as with the American machine, and is subject to the same defects. In one erected at the Plymouth Works an atten pt was made to manage the upsetting by means of side blocks acted on by springs; self-feeding and delivering machinery was also provided;

altogether it probably was the most complete of its kind. Its working, however, was not satisfactory, and the reciprocating squeezer, formerly employed, was restored to favour.

In another substitute for the ordinary squeezer, the blooming of the ball is accomplished by passing it between three eccentric rolls, Fig. 798, p. 367, which during their revolution, by compression, extend it laterally to the size for the rougher. The three rolls work on bearing brasses in a strong framing fitted with adjusting screws, and are coupled together by nuts and spur-gearing.

4397.

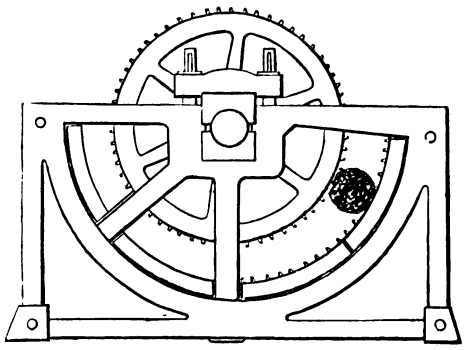

Puddling Rolls.—The puddle-ball having been shaped by the shingler into a bloom of suitable size for the grooves of the rolls, the rougher now takes it in hand. The bloom is passed through the largest groove of the roughing rolls, then through the next smaller, until its sectional diameter is sufficiently reduced for the roller, who shifts it to the finishing rolls, and after passing it three or four times between the rolls, through as many different grooves, produces a finished puddle-bar.

Fig. 4398 is an elevation of a complete forge train, and Figs. 4399 to 4442 exhibit details. Figs. 4399, 4400, side and front view of fast half of coupling crab; Figs. 4401, 4402, rolls' pinion; Figs. 4403, 4404, clip for keeping rolls' coupling up to their place; Figs. 4405, 4406, loose half of coupling crab; Fig. 4407, elevation of rolls' standards, showing chocks, brasses, roll-necks, and setting screws;

4398.

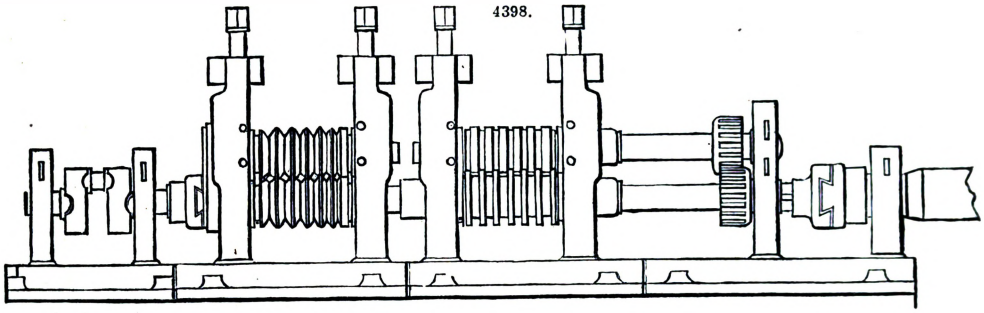

4399.

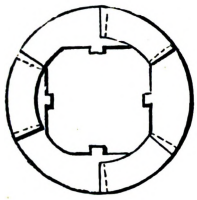

4400.

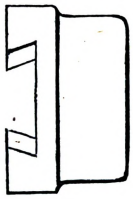

4401.

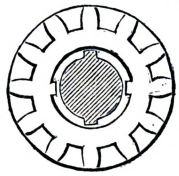

4407.

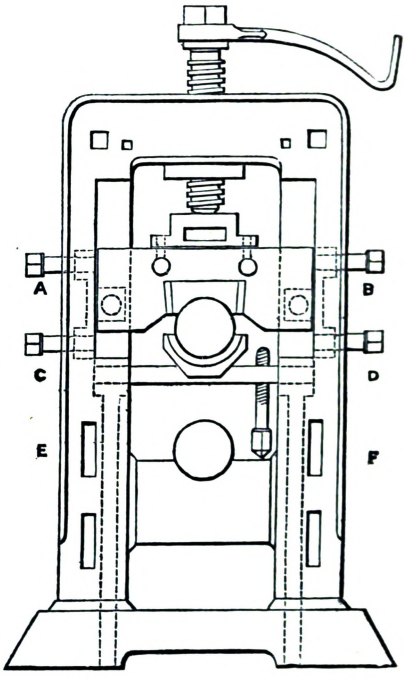

4402.

4403.

4405.

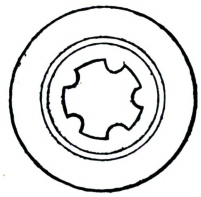

4404.

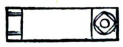

4406.

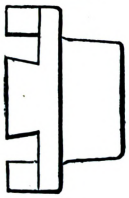

4408

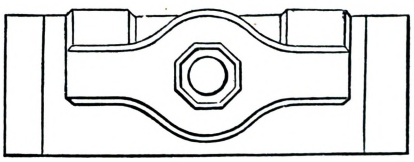

Fig. 4408, plan of standard, Figs. 4409 to 4411, sections of standard; Figs. 4412, 4413, front view and plan of pinion housing; Figs. 4414, 4415, side view and plan of the arm of the squeezer Fig. 4395; Fig. 4416, view of top gudgeon; Fig. 4417, squeezer-crank; Figs. 4418, 4419, standard

for squeezer-crank; Fig. 4420, section of standard, showing gudgeon; Fig. 4421, side elevation of squeezer-arm standard; Fig. 4422, section of same through brass bearing; Figs. 4423, 4424, side

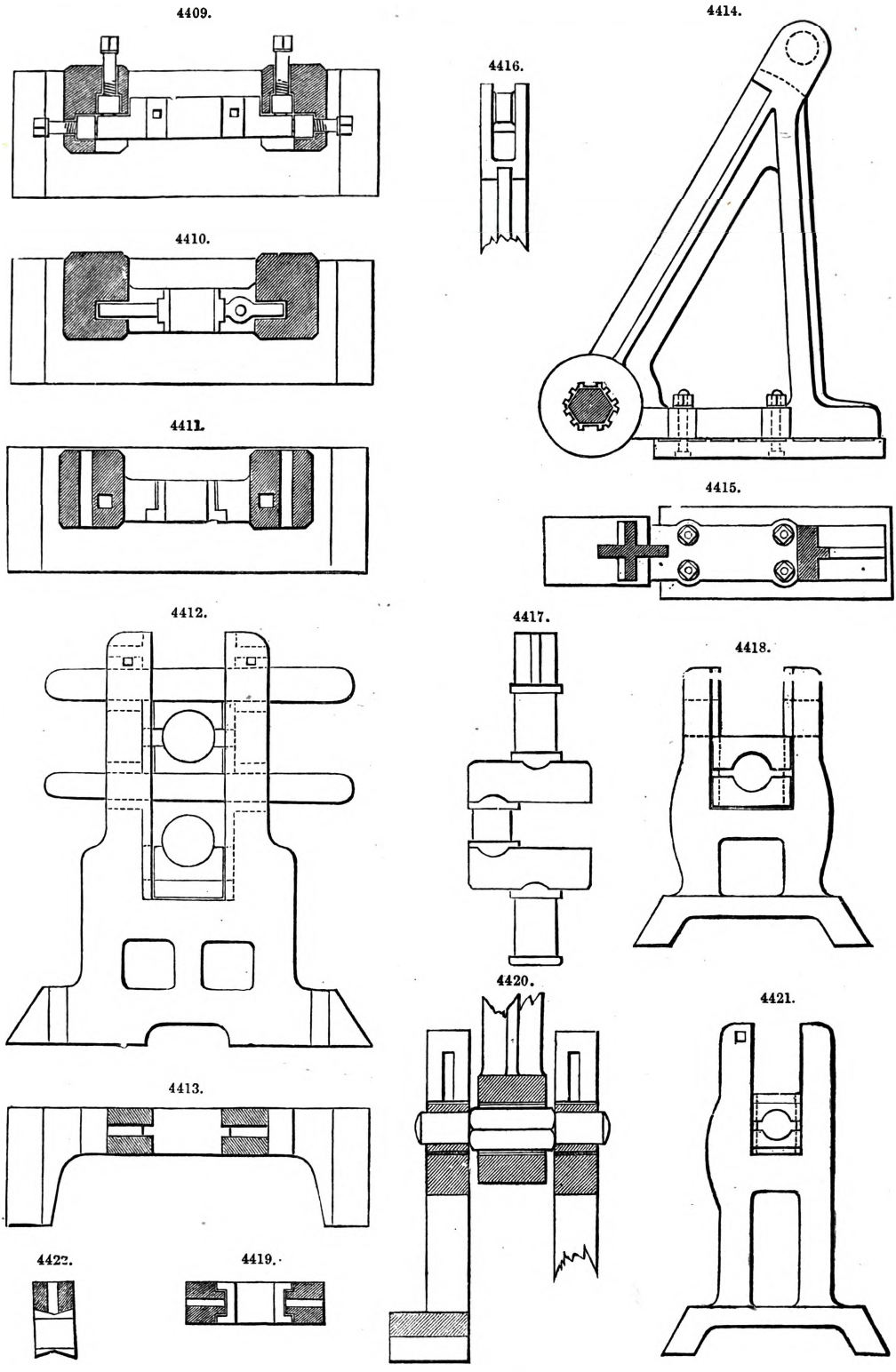

view and cross-section of anvil of squeezer; Figs. 4425, 4426, side and end view of roughing roll to the train; Figs. 4427 to 4429, side and end views of connecting spindle; Figs. 4430 to 4433, section of side and end view of pinion on roll end, with crab for driving squeezer; Figs. 4434, 4435, butt-ends of

squeezer connecting rod; Figs. 4436, 4437, side and end view of coupling box; Figs. 4438, 4439, end of squeezer-anvil; Figs. 4440, 4441, section of rolls, showing loose guides and guides cottered down to rest; Fig. 4442, cinder-plate to go between rolls to keep the cinders out of the bearings.

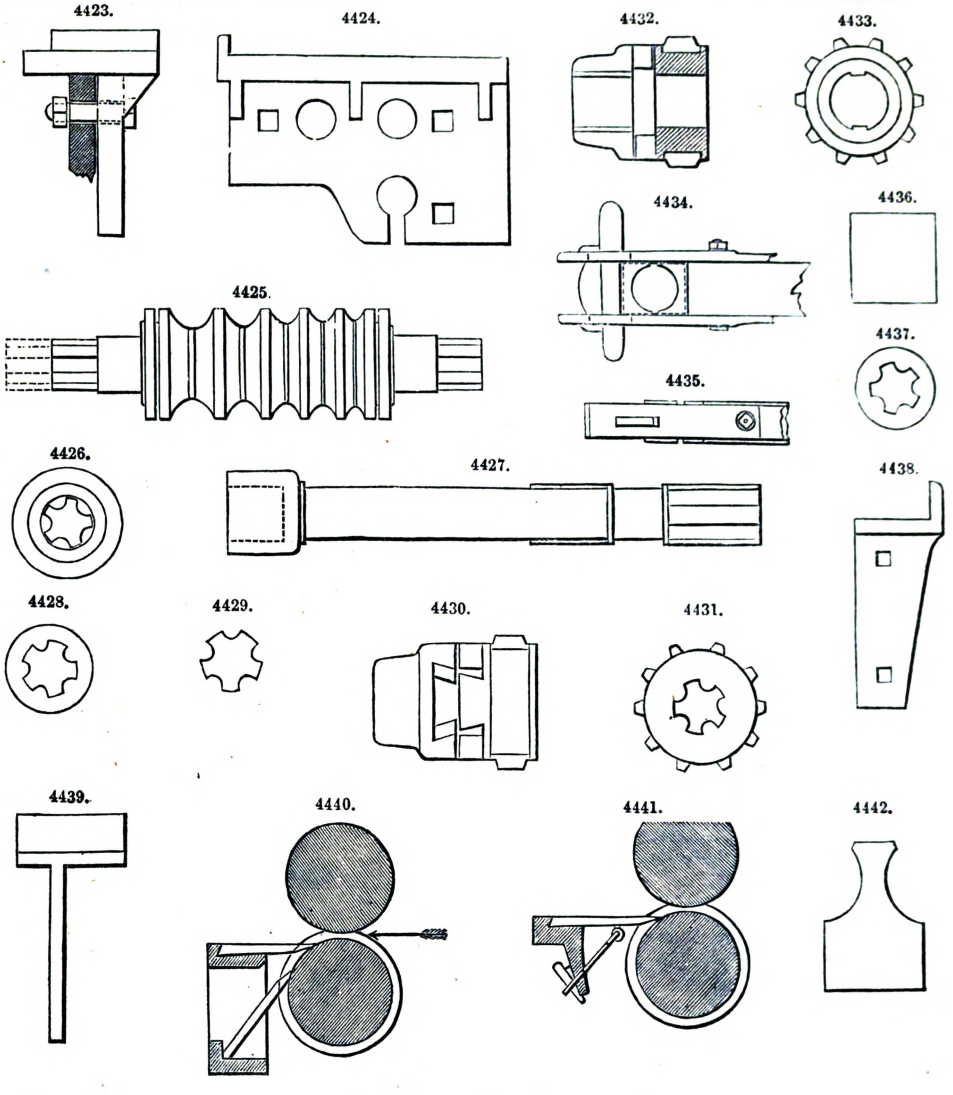

Two pair of rolls form the puddling train, Fig. 4398, one pair for roughing down the bloom, the other for finishing it into a bar. The grooves used in the roughing pair are either oval, Gothic, or diamond-shaped; generally the first two or three grooves are Gothic and the other diamond. The finishing rolls are usually turned with grooves to produce flat bars from 3 to 7 in. wide by ½ in. to 1½ in. thick. For the narrow bars a pair of finishing rolls will contain a sufficient number of grooves to work iron of two widths; but for the wide bars a pair of rolls are required for each width.

In small forges, and where room is an object, the roughing and finishing grooves are sometimes seen in the pair of rolls, which are then made proportionately longer. This arrangement may be advantageous under certain circumstances, but the greater weight of rolls required to be kept in stock, and the necessity for changing such heavy rolls for every alteration of width, are objections to this plan.

The durability of the necks and brasses is greatly increased by using cinder-plates. A narrow groove is sunk in the body of each roll close to the ends, and a thin wrought-iron plate inserted before lowering the top roll, Figs. 4425, 4442. By this means the cinders, which otherwise get into the bearings, and grind away both iron and brass, are excluded.

The bottom roughing roll is provided with a serrated fore-plate and rest, the bottom finishing with rest and wrought-iron top and false guides. Where water-power is employed, and there is no danger of the guides being drawn in, single guides cottered down to the rest may be used, Fig. 4441, With loose guides, Fig. 4440, the catches of the coupling crabs are constructed so that if the motion of the engine be reversed, the train of rolls is disconnected. Unless this provision were made, the entrance of the cold iron guides on the backward motion would be followed by a breakage.

The puddling rolls are generally 18 in. diameter by 3 ft. 6 in. long between bearings; necks, 10 in. diameter; length of roll over necks, 6 ft. 6 in. A pair will work about a month without

cleaning, and will be worn out, body and flutes, in four or five months. The immense strain on the standards when rolling comparatively cold iron requires them to be of great strength. The aggregate area of metal in the two standards to each pair of rolls should be in the weakest place not less than 230 in.; and the pinion-standards should be of nearly equal strength.

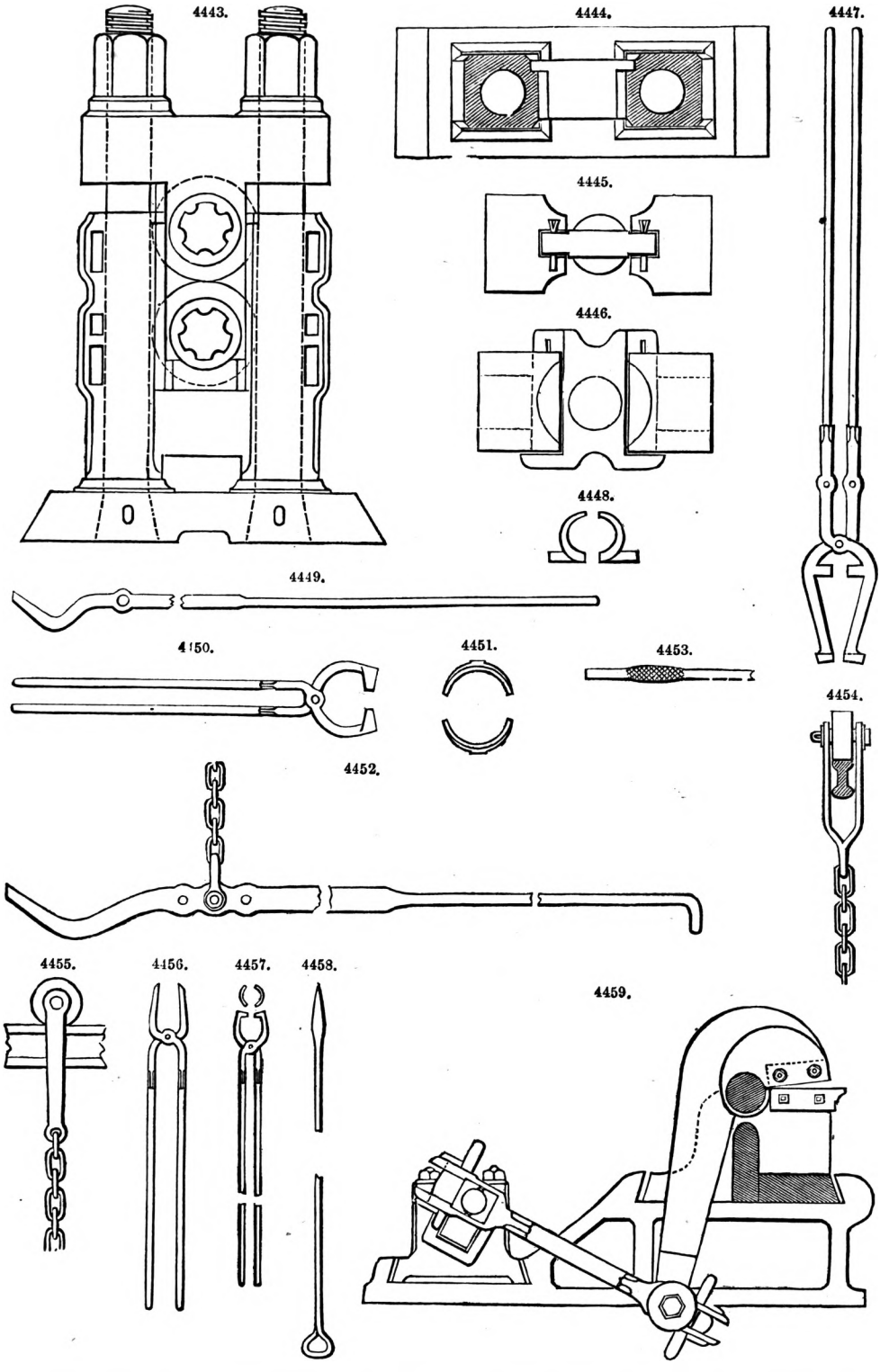

Figs. 4443, 4444, are an elevation and plan of housings for a plate-mill; Figs. 4445 to 4458 show the various hooks, tongs, and other appliances used to manipulate iron at the rolling mill.

The puddle-bar after leaving the rolls is taken by boys to the cutting shears, which in well-arranged forges are placed opposite the finishing rolls. The general practice is to shear the bar hot; but when the lengths and sizes for the mill-piles are not known, the old plan of dragging them out to the bank and shearing cold is followed. Stronger shears are then required, and the labour is performed by men.

Figs. 4459, 4460, show an elevation and plan of a shears for mill-bars; Fig. 4461, part cross-section and Fig. 4462 end of shear-bar; Figs. 4463, 4464, shears for puddled bars; Figs. 4465, 4466,

4460.

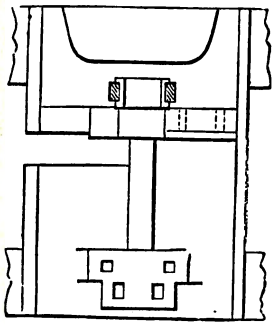

4462.

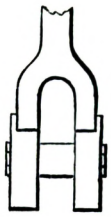

4461.

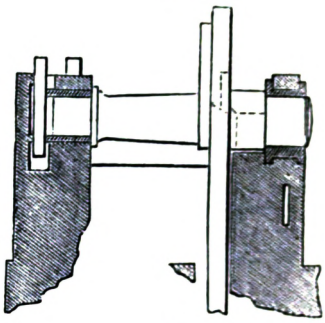

4464.

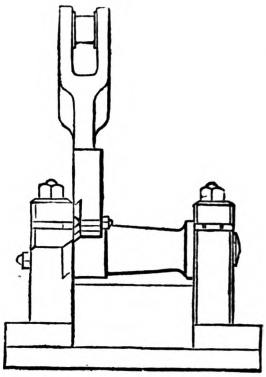

4463.

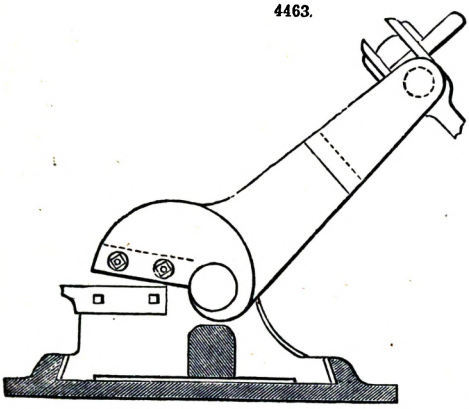

4465.

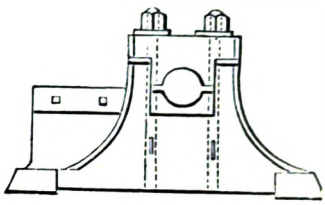

4467.

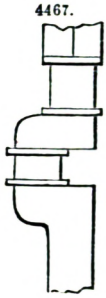

4466.

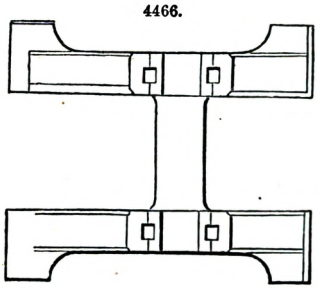

4469.

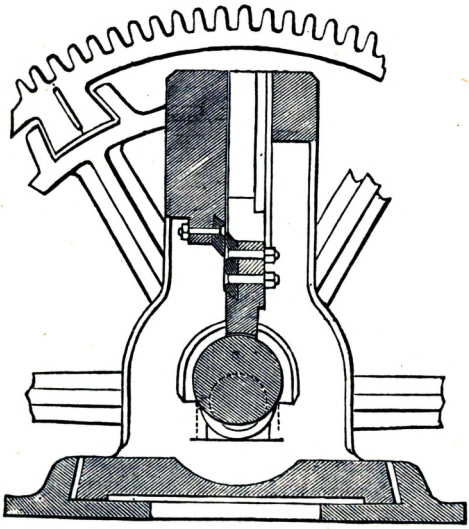

4468.

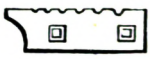

4470.

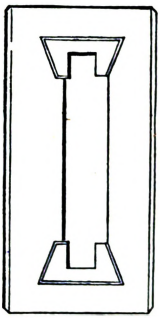

4471.

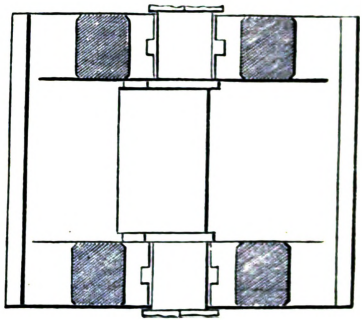

elevation and plan of framing for shears; Fig. 4467, shears-crank; Fig. 4468, knife for cutting bars; Figs. 4469 to 4471, cross-section, plan of frame, and sectional plan of an eccentric shears.

The speed of the puddling rolls ranges from thirty-five to eighty revolutions a minute. The Staffordshire and Derbyshire forges probably work at the lowest speed of any in this country. The Welsh forges are driven from fifty to eighty. The speed preferred by the workmen, and which

is found most advantageous with all but very red short metal, may be placed at fifty-six. But if the iron be very red short, a higher speed is attended with less waste. The shears may be driven at the same rate as the rolls when the latter do not exceed fifty-six revolutions a minute; but when they run faster, the shears should be geared, so as not to exceed this number of cuts a minute.

4472.

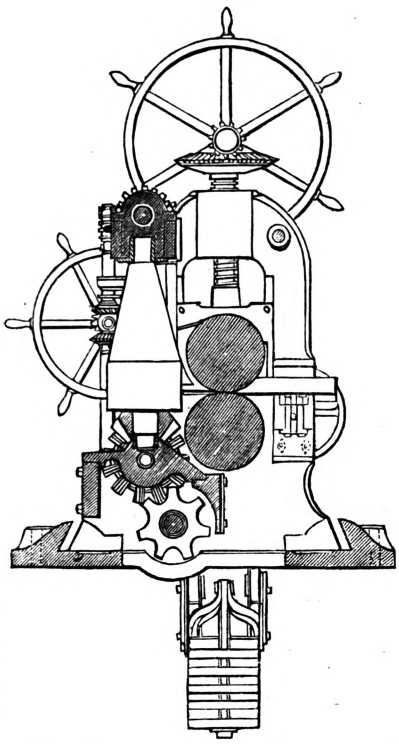

4473.

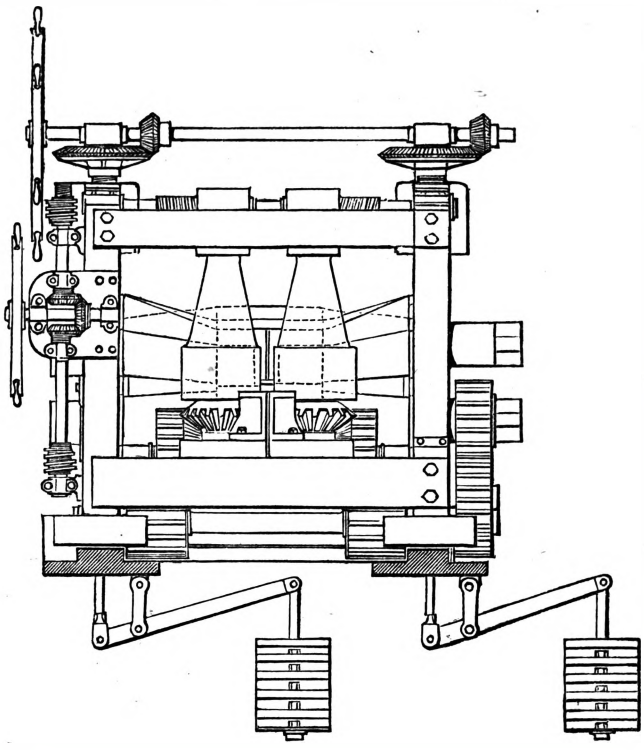

4474.

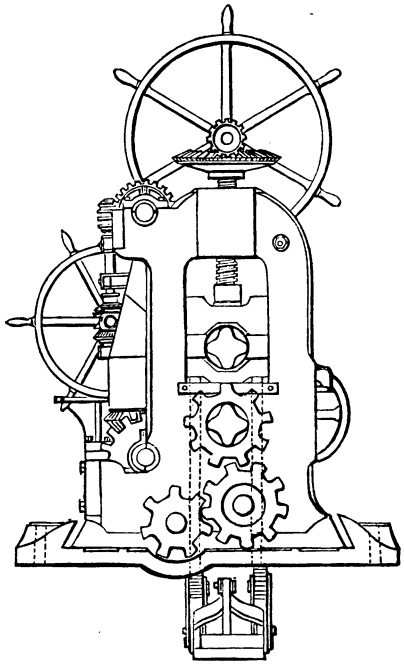

4475.

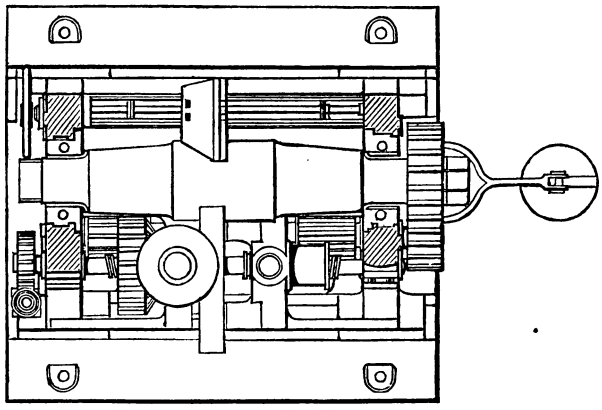

At a speed of eighty revolutions a minute, the bar travels at the rate of four and a quarter miles an hour, and at this rate the workman must follow; at a speed of fifty-six a minute, the bar travels at the rate of three miles an hour.

Universal Rolling Mill.—Figs. 4472 to 4475 illustrate C. Wagner's rolling mill for bars and flats of variable sizes, which has attained the name of a universal mill on account of the facility which it affords for rolling different widths and thicknesses with the same set of rolls. The mill consists of two horizontal rolls mounted and geared in the usual way. To these is added a pair of vertical rolls, fixed in bearings which can be traversed on slides, in a horizontal direction, by means of a pair of right and left screws. The simultaneous movement of the two screws is obtained by a hand-wheel geared to a vertical spindle carrying two worms. These worms act upon wheels, shown as keyed

on to the screw-spindles. By turning these spindles the two vertical rolls are brought closer together or removed from each other, and by these means the width of the bars to be produced in the mill can be fixed at will. The vertical rolls obtain their revolving motion from the driving pinion by means of a pair of bevel-wheels geared into other bevel-wheels which slide on their shaft following the movements of the vertical rolls. The horizontal top roll is held up in its bearings by a pair of counterweights, and its distance from the bottom roll is regulated in the usual way by a pair of screws. Several rolling mills of this kind are in operation in Austria, and have proved very useful and convenient in practice.

Ramsbottom's Reversing Rolling Mill.—The special point in the arrangement of the rolling mill designed by John Ramsbottom is that the rolls are driven direct by the engine, without the intervention of a fly-wheel; and the engine and rolls together are reversed each time that a heat is passed through, the rolling being alternately in opposite directions. The idea of reversing a train of rolls by reversing the engine at each passage of the heat through the rolls was first suggested by Nasmyth, but was, we believe, first applied in this mill.

4476.

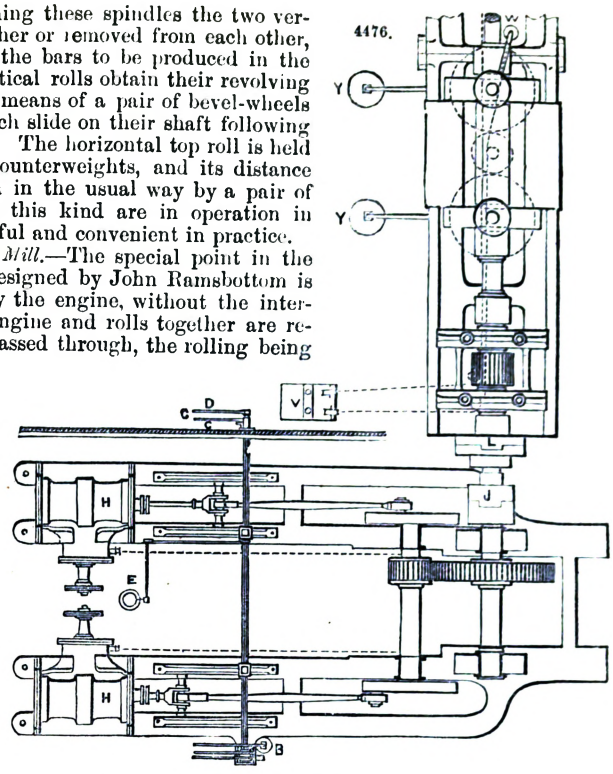

Fig. 4476 is a general plan of the rolling mill and engines; Fig. 4477 an enlarged plan of the engines; Fig. 4478 a side elevation of the engines; and Fig. 4479 a transverse section. They are a pair of direct-acting horizontal engines coupled at right angles, Fig. 4477, and are reversed by hydraulic power without shutting off steam, by means of the arrangement shown in plan, Fig. 4477, and in elevation to a larger scale in Fig. 4480. The reversing shaft A is connected by links to a piston working in a small cylinder B of 4 in. diameter and 10½ in. stroke, the water-pressure being 300 lbs. the square inch. The admission of the water to the cylinder is regulated by a slide-valve worked by the shaft and hand-lever C C. This shaft is prolonged and carried outside the engine-house, as shown in Fig. 4477, in order to place the attendant in a position where he may be able more easily to seize the right moment for reversing. The shaft C is made hollow, as shown enlarged in Fig. 4481; and through it runs a second shaft with hand-lever D D, which regulates the main steam-valve E of the engines by the lever and connecting rod F. By this means the attendant standing outside the engine-house at G and in full view of the rolls has complete command over the engines by the two handles C and D. A hand-lever is also fixed on the reversing shaft A, as a provision for reversing the engines in the event of any accident occurring to the hydraulic gear or any deficiency in the water supply.

4477.

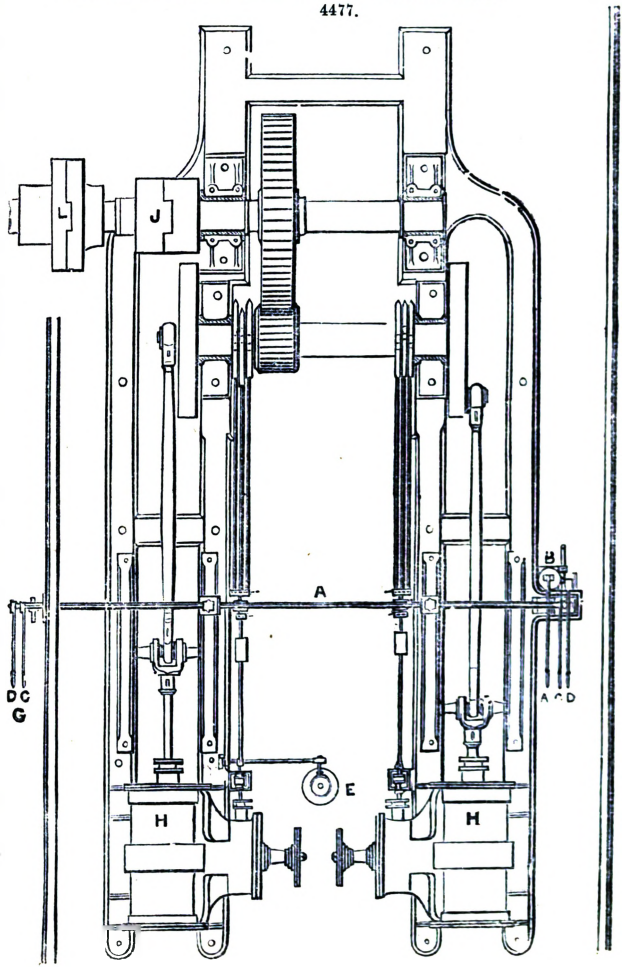

The engines make 3¼ revolutions for one revolution of the rolls, and the speed of piston is about four times (4·14) that of the circumference of the rolls. The cylinders H H, Fig. 4477, are 28 in. diameter with 4 ft. stroke. The expansion link K, Fig. 4478, shown to a larger scale in Fig. 4482,

is the straight link devised by Alexander Allan, and is driven by three eccentrics and rods, two at one end and one at the other, so as to avoid the oblique thrust inevitable with only two eccentric rods.

4478.

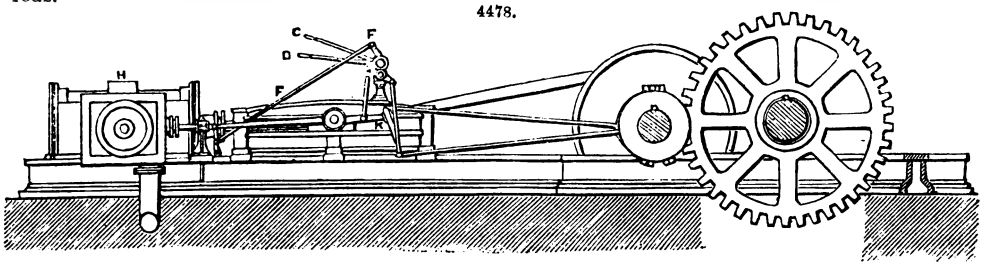

4479.

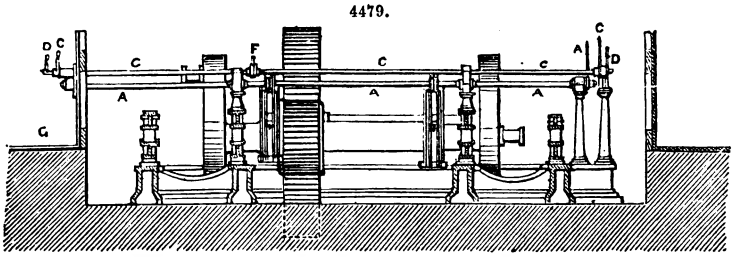

The connection between the engines and the mill train is made, first by means of an ordinary clutch shown at J J in Figs. 4476, 4477, and secondly by a friction coupling designed by Ramsbottom, and shown in position at L L. This friction coupling is shown enlarged in Figs. 4483, 4484. The disc M is keyed on the driver-shaft N, and a smaller disc O is mounted wobbler-fashion on the mill-shaft P, and tightly compressed between the driver-disc and a loose ring I, bolted to the driver-disc. Annular segments of alder-wood packing $\frac{3}{4}$ in. thick are interposed between the discs to increase the bite, and are placed so that the fibres run radially to the shaft.

4481.

4482.

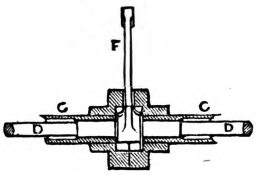

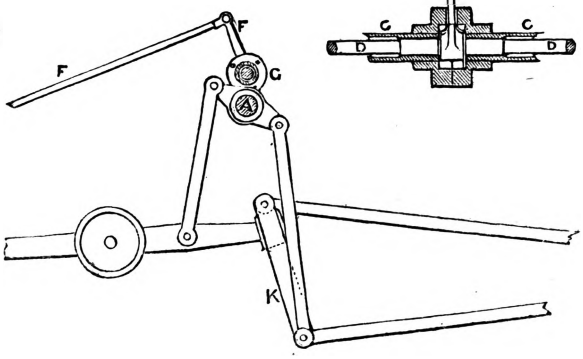

4480.

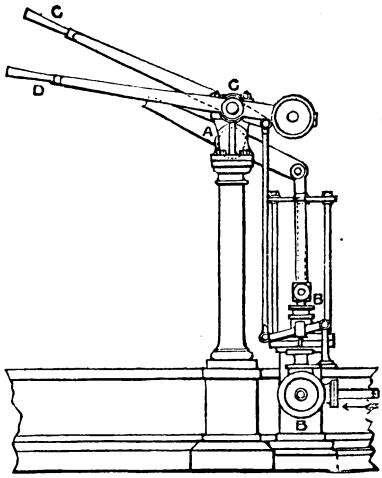

This friction coupling is capable of transmitting the whole power of the engines in regular work; but if from a sudden obstruction the motion of the rolls is arrested, the driver-disc slips round the follower without moving it, and no injury is sustained by any part of the machinery. In ordinary roll trains it has sometimes happened that the breaking spindle has broken, and that the broken end has acted as a lever to shift the engines from their bed; but by the present arrangement the probability of such an occurrence is very much diminished, and many stoppages and breakages are avoided..

The engines are of such power that there is no necessity to do more than just start them before the heat enters the rolls. Thus the heavy fly-wheel usually employed is not required, and consequently the engines are easily reversed; neither is there any expenditure of steam except at the time of rolling. For the same reason the wear and tear of machinery and the necessary lubrication are reduced in this mode of driving the rolls. Instead of the heavy fly-wheel employed in the ordinary arrangement of rolling mills as a reservoir of power, in which the power of the engine is previously accumulated ready to be concentrated upon the work at the time

of rolling, the boiler is made to serve as the reservoir of power in the new rolling mill; and it has this great advantage, that whereas the fly-wheel contains only a limited store of power, which continues diminishing during the time of application, the boiler supply is practically unlimited, so that the rolling power continues constant throughout the time of operation.

In the rolling of puddled slabs for the frame-plates of locomotive engines, which are reduced 3½ in. in thickness at one heat in the rolls, about twenty-one reversals of the rolls are required. These are effected with great ease by the arrangement above described, the shock being transmitted to the elastic cushion of steam in the cylinders of the engines. This handiness allows of either iron or steel plates being passed through both the roughing-down rolls and the finishing rolls at one heat; and the work is thus done with a minimum expenditure of heat and waste of metal. It has been found on trial not at all difficult to reverse the engines together with the whole train of rolls as many as seventy-three times in one minute.

There are two pairs of rolls, one for roughing down and the other for finishing. The roughing-down pair are 24 in. diameter by 6 ft. length; they are shown in elevation and plan, Figs. 4485, 4486; Fig. 4487 is an end elevation; and Figs. 4488, 4489, are transverse sections through the housing and through the rolls.

4485.

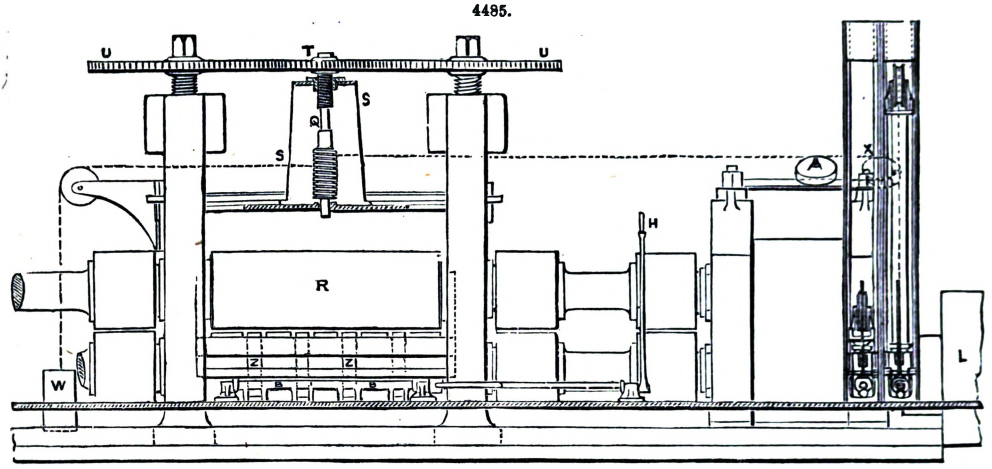

In these rolls a new description of tightening-down gear has been designed, in order to obtain greater facility and accuracy in tightening down the rolls, and to ensure the top roll being at all times perfectly parallel to the bottom roll. This gear is shown in Figs. 4485, 4486, 4489. It consists of a vertical wrought-iron shaft Q, carried by a cast-iron bed-plate and supported at the

4486.

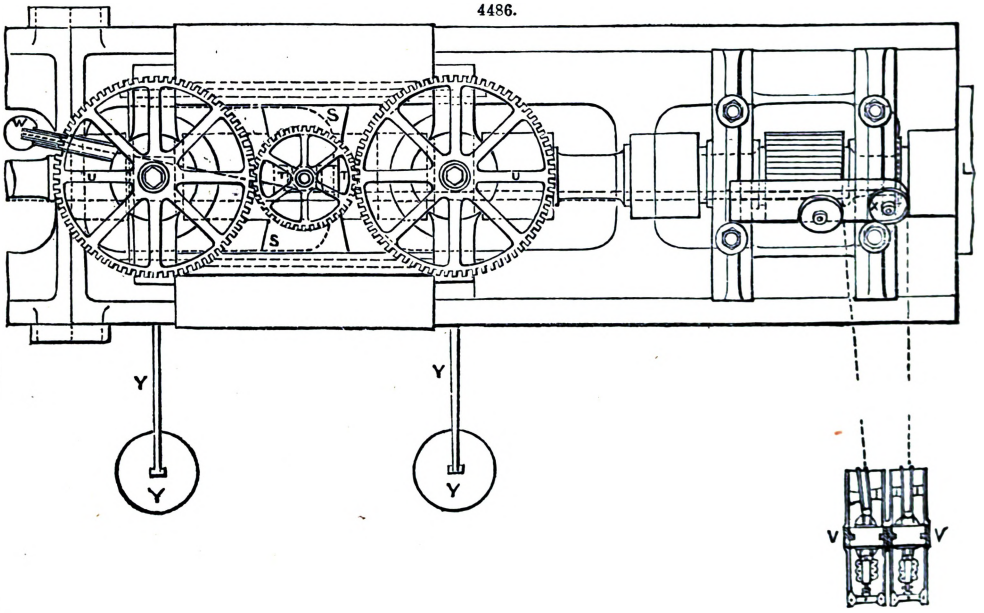

upper end by the wrought-iron standard S, between the housings and in the centre of the length of the rolls. On the top of the shaft is keyed a spur-wheel T, which drives the two spur-wheels U U on the vertical holding-down screws of the top roll R. These screws work in steel

nuts let into the housings, Fig. 4488, and the top bearing of the centre shaft Q is also a corresponding screw working in a brass nut, so that the centre spur-wheel T rises and descends simultaneously with the two outer spur-wheels U U when the gear is in motion. A vertical hydraulic ram V, Fig. 4485, is placed in a convenient position near the rolls; and a chain, shown by the dotted line, is fastened at one end to the barrel of the ram, carried thence over the pulley on the ram-head V, down again to the fixed pulley below, and thence round a guide-pulley X on the nearer roll housing to the spiral chain-barrel upon the lower end of the

4487.

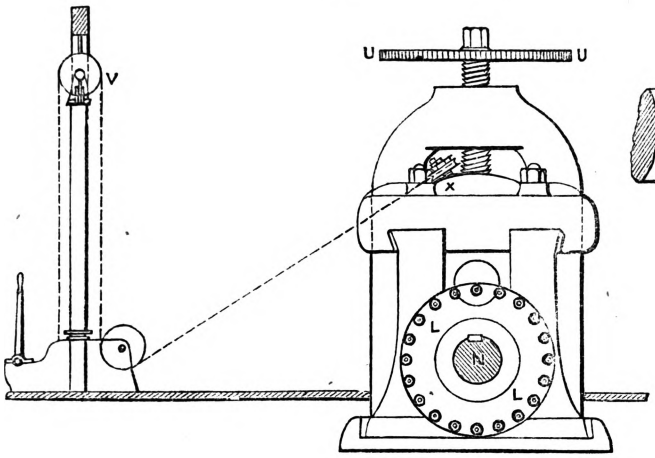

4483.

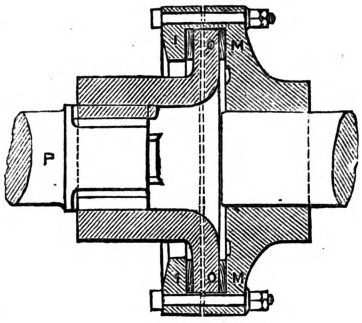

4484.

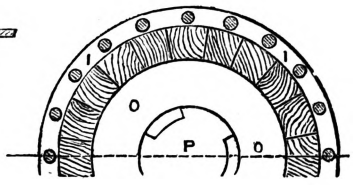

vertical centre shaft Q. The chain makes a few coils round the barrel, and the end is fastened to the barrel near the top. Another chain is fastened to the barrel near the bottom, and after a few coils round the barrel quits it in nearly the same horizontal plane as the first chain, and passes off on the opposite side and over a guide-pulley on the farther housing; a weight W is suspended at the end of this chain, heavy enough to overhaul the other chain and slack back the tightening-down screws of the top roll, when the water-pressure is shut off from the hydraulic ram V.

4488.

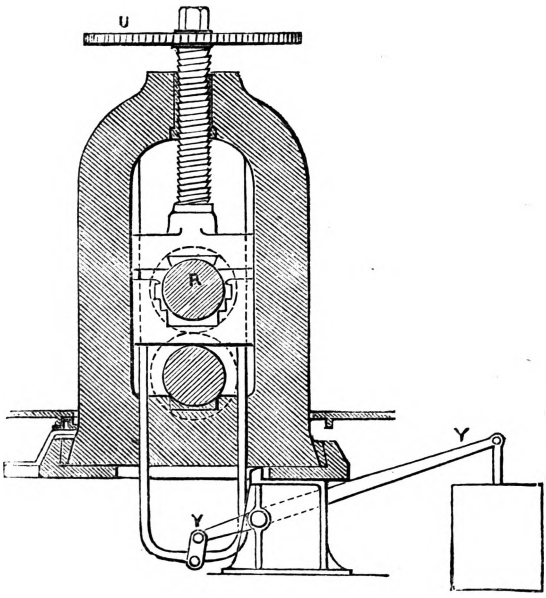

4489.

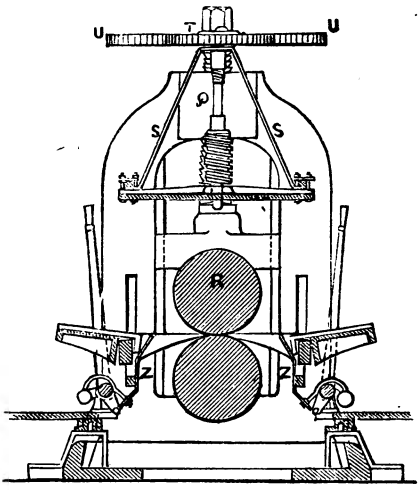

When a slab has entered and passed once through the rolls, the engines are reversed, and the water-valve being opened the ram V rises and hauls in the chain, driving the chain-barrel and causing the tightening-down screws U U to descend and lower both ends of the top roll simultaneously to the required extent. This process is repeated after each passage of the slab through

the rolls. When the rolling is completed, the water is released from the ram, and the ram falls, while the counterbalance weight W on the second chain winds up the tightening-down screws to their original position; and the usual counterbalance apparatus Y, Figs. 4485, 4488, applied to the top roll R, causes it to rise with the upper chocks.

The head V of the hydraulic ram, Figs. 4485, 4487, carries an index finger, which by means of graduations on the guides enables the attendant to give with accuracy the requisite amount of lowering of the top roll at each reversal, and thereby to reduce each slab with certainty to exactly the same thickness. As an additional precaution in rolling a set of slabs all to the same thickness, a chalk mark is made on one of the spur-wheels U, after the final rolling of the first slab; and at the final rolling of each successive slab of the same set a stop is placed in the teeth of the spur-wheel at this mark, stopping the screwing down always at the same point, and thus preventing the possibility of a mistake in the finished thickness of any slabs of that set. The total vertical motion given to the roll by the hydraulic ram is 3½ in., while the stroke of the ram is 6 ft. 2½ in., consequently the movement of the ram is twenty-one times that of the roll, and the indication by which the tightening of the rolls is measured being thus magnified twenty-one times gives great accuracy in the adjustment.

By this system of gearing the two tightening-down screws together by means of the intermediate spur-wheel, the top roll is made to move always truly parallel to the lower roll, and there is no possibility of one end of the roll descending more than the other. Thus the two surfaces of the slabs rolled are made perfectly parallel to each other, with a uniform thickness throughout the entire width of the slab.

4490.

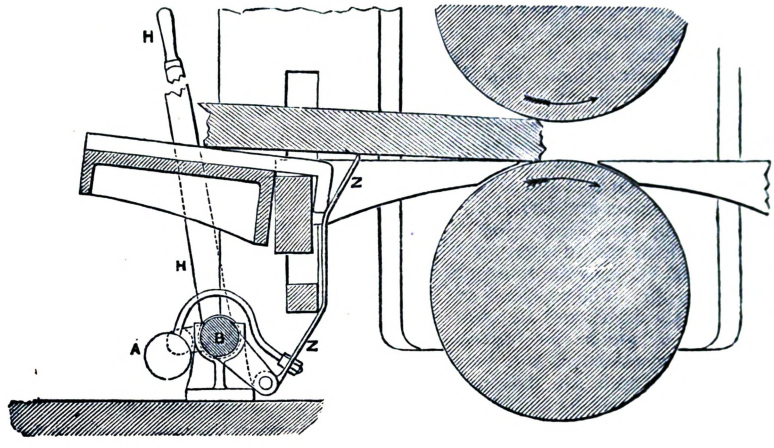

In the finishing rolls the same tightening-down gear is employed. These rolls are of cast iron chilled on the circumference, 24 in. diameter by 7 ft. length; and they differ in no important respect from the roughing-down rolls. As the finishing rolls require only a small vertical motion, no counterbalancing gear is applied to the top roll as in the previous pair, the bottom chocks of the top roll being supported by the ordinary transverse spring beams passed through the housings.

4491.

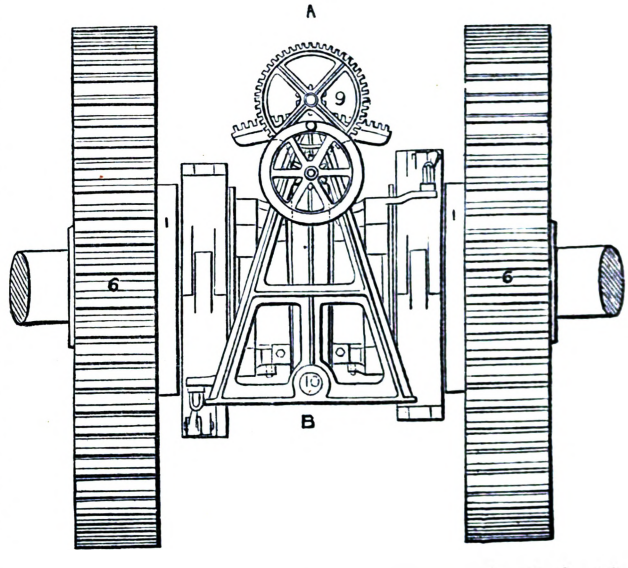

In order to facilitate the introduction of large slabs into the roughing-down rolls, a set of bent levers Z Z, Figs. 4485, 4489, shown to a larger scale in Fig. 4490, are attached to a horizontal shaft B running along the ground parallel to the rolls; and by means of a hand-lever H on the shaft all these levers are simultaneously brought up under the slab, and by a slight movement the slab is then lifted into the rolls. Each of the levers is attached to the shaft B by an arm and pin joint, so that it can yield to any inequality on the surface of the slab; and it is brought up again by the overhanging counterbalance ball A.

From the fact that the train of rolls driven in this manner is only in motion while the heat is being passed through, it is not found necessary to use a stream of water for lubricating the roll bearings in the ordinary manner; but all the journals are truly fitted in the bearings, and are lubricated with oil and tallow.

Napier's Differential Friction-Gear for Reversing Rolling Mills.—Fig. 4491 is an elevation of

Napier's friction-gear; Fig. 4492 a section through A B; Fig. 4493 a plan; and Fig. 4494 a section through C I, with the friction-straps removed. Fig. 4495 a self-acting friction-brake, which is the basis of the differential clutch.

In Fig. 4495, 1 is the friction-wheel, 2 the differential lever, and C D E the friction-strap connected by links to the differential lever; 3 is what is termed a thrust-block, in the exterior concave part of which the differential lever rests, and the hole through the differential lever for the fulcrum-pin is slotted a little on the part farthest from the friction-wheel, by which arrangement all the radial strain which, if there was no thrust-block, would be borne by the fulcrum-pin, is taken off it and transmitted to the friction-wheel, leaving only the tangential strain to be borne by the fulcrum-pin. The principal object of the thrust-block is to relieve the fulcrum-pin of a great part of the strain that it would otherwise have to bear; but it has the secondary result of increasing the brake or clutch by about 50 per cent., for the friction of the thrust-block on the friction-wheel is about the average between that of the two segments C D and D E, of which the friction-strap consists.

4492.

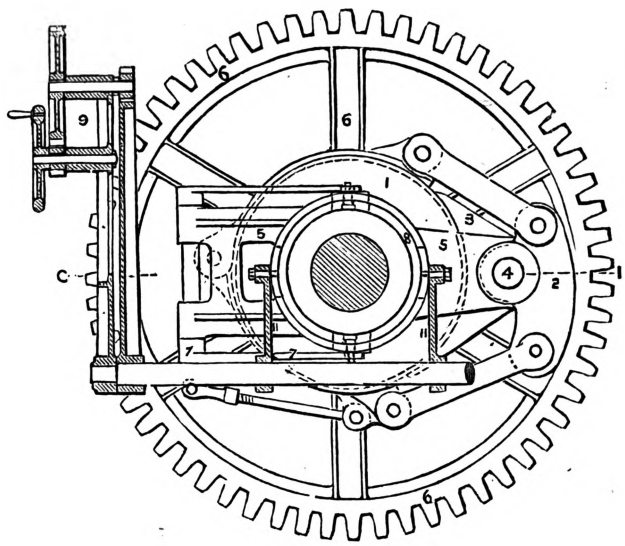

4493.

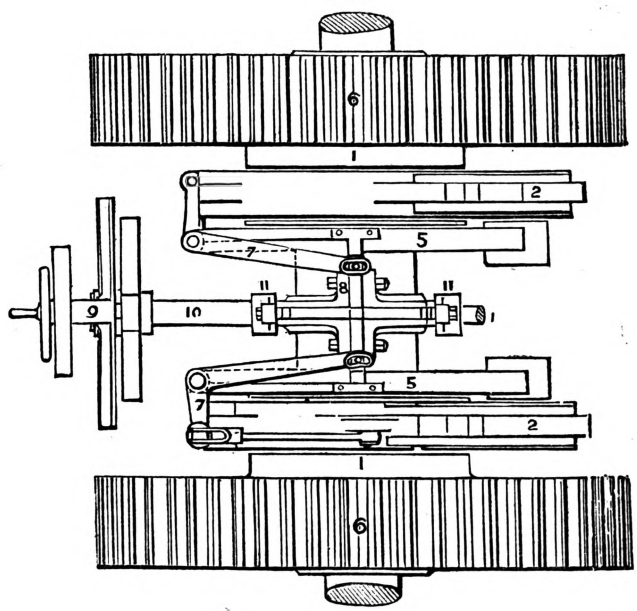

Referring to Figs. 4491 to 4494, in which the fulcrum-pin F of Fig. 4495 becomes the crank-pin or driving pin. The cranks 5 are keyed to the shaft, and the spur-wheels 6, to which the friction-wheels 1 are attached, run loose on the shafts, and are driven in opposite directions by any convenient arrangement.

The friction-straps are alternately made to grip and release their respective friction-wheels by means of the bell-cranks 7, worked by the sliding ring 8, which is worked by the hand-gearing 9 through the axle 10, to which are keyed the two levers 11.

When the sliding ring 8 is in the middle between the two cranks, both clutches are out of gear, and if it is moved towards one or the other crank, the corresponding clutch is put into gear by allowing the friction-strap to grip its friction-wheel, when that wheel drives its friction-strap, and the strap the crank by its crank-pin. Though this plan of clutch may be made self-holding, it may at the same time be thrown into gear when going at great speed without the slightest shock, for the self-holding action does not come into full play till the friction-strap and its respective friction-wheel have acquired the same relative velocity.

In a rolling mill at the Butterley Iron-works, in Yorkshire, where the rolls, which are 22 in. diameter, make the rapid speed of forty-five revolutions a minute, they can be reversed from full speed one way to full speed the opposite way in about three seconds without the slightest shock; and smaller machinery, making two to three hundred revolutions, is reversed in a fraction of a second from full speed one way to full speed the other, without the slightest indication of a shock.

Stevenson's Reversing Gear.—Figs. 4496 to 4499 are sections of a mill-shaft with gear-wheels and conical clutch as arranged by Allan Stevenson. The shaft, 33, carries two spur-wheels, 35 and 36, which, by means of well-known gearing, are continuously driven in opposite directions. The wheels, 35 and 36, are formed with hollow conical rims, 37, to frictionally engage with convexly-coned parts, 38, upon a duplex sliding-piece, 39, between them, and they are fixed on elongated bosses, 40, carried on brass bushes, 41, on the shaft, whilst collar-pieces, 42, are bolted on the shaft

in halves to sustain the end thrust of the coupling action. The position of each brass bush, 41, is such that the plane of the centre of gravity of the wheel, 35 or 36, may be at the middle of its length, or as nearly so as possible, the tendency of the wheels when running loose to wear the bushes conical will be thus avoided. For this purpose the bushes, 41, are elongated at their inner ends; and to admit of this elongation, the clutch-piece, 39, is made bell-shaped. The convexly-coned parts, 38, of the clutch-piece, 39, are made in separate segments, fixed and adjusted by screw-bolts, and on wear taking place they can be readjusted with great facility. The conical surfaces are preferably made as shown, with a very acute inclination to the shaft, and the angle should in no case exceed half a right angle; for as a right angle, that of a plain disc, is approached, not only is a much greater pressure required to give the requisite bite, but the action of getting into contact is also more sudden and liable to produce injurious concussion. The duplex clutch-piece, 39, is moved to put one or other of the wheels, 35 or 36, into gear by a transverse key, 43, of hammered cast-steel working in a slot cut through the shaft, 33, and fixed in a rod or spindle, 44. The spindle, 44, is moved by means of a steam or hydraulic cylinder, but Stevenson prefers steam to hydraulic pressure, as the elasticity of the steam renders the engaging action both more gradual and the reversals more speedy. The contact pressure required is slight, and a very small steam-cylinder working through levers, as in Figs. 4498, 4499, is quite sufficient to give the requisite driving grip.

4494.

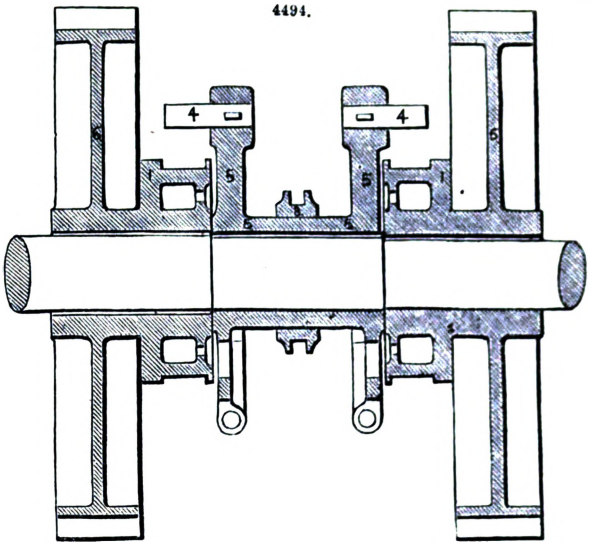

4495.

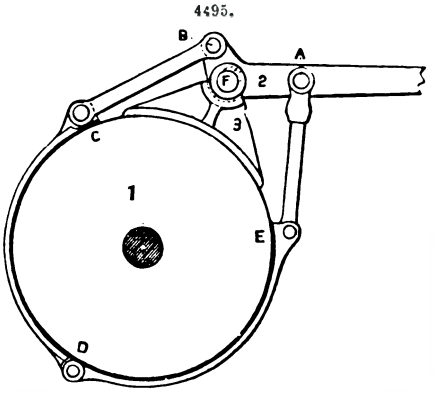

Slitting Mill.—Fig. 4500 is a general view; Figs. 4501, 4502, side and front views; Figs. 4503, 4504, plan and sectional plan of a slitting mill, used for forming rods which are square or rectangular in section; Figs. 4505, 4506, are views of the connecting spindle. The machine consists of a pair of rolls having a series of narrow, sharp-edged, parallel collars, with the intermediate depressions or grooves of the same width. The collars and grooves are produced in the lathe, and the former work between the latter, leaving spaces sufficient for the rods to pass through.

We subjoin, in the following Tables taken from Truran, the principal dimensions of such parts of the machinery as demand special care in their construction; they were taken from forges which had been at work some years.

DIMENSIONS OF ENGINES AND MACHINERY AT PUDDLING FORGES.

Name of Works.	Description of Engine.	Diameter of Cylinder in inches.	Length of Stroke in feet.	Number of Strokes a minute.	Diameter of Crank-shaft Bearing in inches.	Diameter of Crank-pin in inches.	Diameter of Driving Wheel at Pitch-line in feet.	Width of Tooth on Face in inches.
Dowlais, 1	Low-pressure condensing beam	45	7·0	22	13·5	7	12·6	15
„ 2	„ „ „	36	7·0	22	12·0	7	13·6	15
„ 3	High-pressure, beam	42	6·0	20	15·5	8	15·0	19
„ 4	„ horizontal ..	37	7·0	23	13·5	6	13·6	15
„ 5	„ vertical	26	4·0	30	10·0	4	11·5	12
Hirwain ..	Low-pressure	30	6·0	20	11·0	5	15·8	14
Forest ..	Water-power	..	..	..	10·0	..	19·0	14

DIMENSIONS OF ENGINES AND MACHINERY AT PUDDLING FORGES—*continued.*

Name of Works.	Thickness of Rim of Wheel in inches.	Number of Teeth in Driving Wheel.	Pitch of Teeth in Driving Wheel in inches.	Diameter of Spur-wheel at Pitch-line in inches.	Width of Spur-wheel over Flanges in inches.	Thickness of Rim of Spur-wheel in inches.	Diameter of Fly-wheel Shaft-bearings in inches.	Diameter of Fly-wheel in feet.	Section of Metal in Rim of Fly-wheel in square inches.	Number of Teeth in Spur-wheel.	Revolutions of Fly-wheel a minute.
Dowlais, 1	4·3	102	4·6	5·2	21	..	12·0	15·5	144	42	53
,, 2	4·7	102	5·0	4·3	21	..	12·0	16·0	144	33	68
,, 3	5·0	128	4·6	4·9	24	..	12·0	18·0	144	42	61
,, 4	4·7	102	5·0	4·3	21	..	12·0	15·3	144	33	71
,, 5	3·8	96	4·5	..	17	..	8·5	12·0	108	25	114
Hirwain ..	3·0	120	5·0	..	20	3	9·5	16·0	144	26	..
Forest ..	3·0	144	5·0	..	20	3	9·5	16·0	144	26	..

DIMENSIONS OF ENGINES AND MACHINERY AT PUDDLING FORGES—*continued.*

Name of Works.	Number of Trains driven by Engine.	Revolutions of Rolls a minute.	Diameter of Shear-spindles.	Revolutions of Shear-spindle and Cuts of Shears a minute.	Weight of Engine-framing under the level of the Crank-shaft.	Number of Boilers.	Description of Boiler.	Surface of Boiler exposed to the heat of fire.	Area of Fire-grate.	Consumption of Coal every twenty-four hours.	Pressure on Boiler in lbs. a square inch, above atmosphere.
Dowlais, 1	2	53	8	54	46	3	Cylindrical	1200	142	9·5	22
,, 2	2	68	10	22	48	3	,,	1134	156	9·5	28
,, 3	2	61	8	41	216	3	,,	1100	142	10·0	50
,, 4	2	71	8	59	94	4	,,	1296	220	14·0	62
,, 5	2	..	8	57	22	2	,,	648	112	8·0	75
Hirwain ..	1	..	..	..	37	..	..	..	200	9·0	7
Forest ..	1	..	..	..	43	..	..	..	..	..	..

Heating or Balling Furnace.—The conversion of the puddle-bars into the various forms of finished iron met with in commerce is effected by heating them in furnaces, commonly called balling furnaces, Figs. 4507 to 4510—but perhaps heating furnaces, the name by which they are distinguished in some works, is more appropriate—and afterwards rolling them out into bars, or plates, of such sections and dimensions as may be desired.

The heating furnace is very similar to the puddling furnace; it has a chimney of like dimensions, but is generally 8 or 9 in. wider and 2 ft. longer, for working the larger sizes of iron. The area of the fire-place averages 12 ft. The cast-iron bottom is placed 13 or 14 in. below the working door, and on it a sand bottom is laid, falling from the door, both towards the back of the furnace and towards the flue. Between the body of the furnace and the fire-place a bridge, 9 in. thick, is carried up to within 14 in. of the roof; and at the stack end the sand bottom is gradually rounded off to meet the floor of the flue. The iron bottom is not indispensable, though generally used. If the bridge be carried up from the bottom of the ash-pit, the inside space may be filled up with any convenient material to a level for the sand bottom. A stock-hole and working door complete the heating furnace.

A number of puddle-bars of a suitable length, generally from 3 to 4½ ft., are placed together to form a *pile*, the sectional dimension of which varies with the size of iron ordered, from 3 in. to 10 in. square. If the piles are made 3 ft. 6 in. long and 7 in. wide, by 8 in. high—a common size for railway bars and the larger kinds of merchant iron—the baller charges four at a time for a heat, by placing them singly on a flat iron bar, called a *peeler*, and sliding them into the furnace, taking due care not to displace the arrangement of the bars. When charged the four piles will lie nearly across the furnace, radiating from the door, the ends towards the back lying 6 or 8 in. lower than those nearest the door.

Figs. 4511, 4512, are views of piling tables, and Fig. 4513 a rest.

A little fine coal is thrown around the door, to exclude the cold air, and the damper opened to its widest extent. The grate is cleaned, fresh fuel added, and the fire urged to the production of an intense heat. After charging, the baller's chief occupation is watching the piles, and turning them so that they may be heated equally, and be brought to a welding heat in the least time. When this point is approached, a portion of the iron becomes oxidized, and, combining with the earthy matter, it forms a cinder, which flows over the surface of the pile, and protects it for a brief period from the further action of the air. If the operation be prolonged the flow of cinder ceases, and the iron suffers from the oxygen of the air, losing its tenacity and property of welding.

A *heat* such as we have described will be ready in sixty minutes. The piles are then grasped by a pair of heavy tongs, Fig. 4514, and dragged on to a carriage, Figs. 4515 to 4517, for conveyance

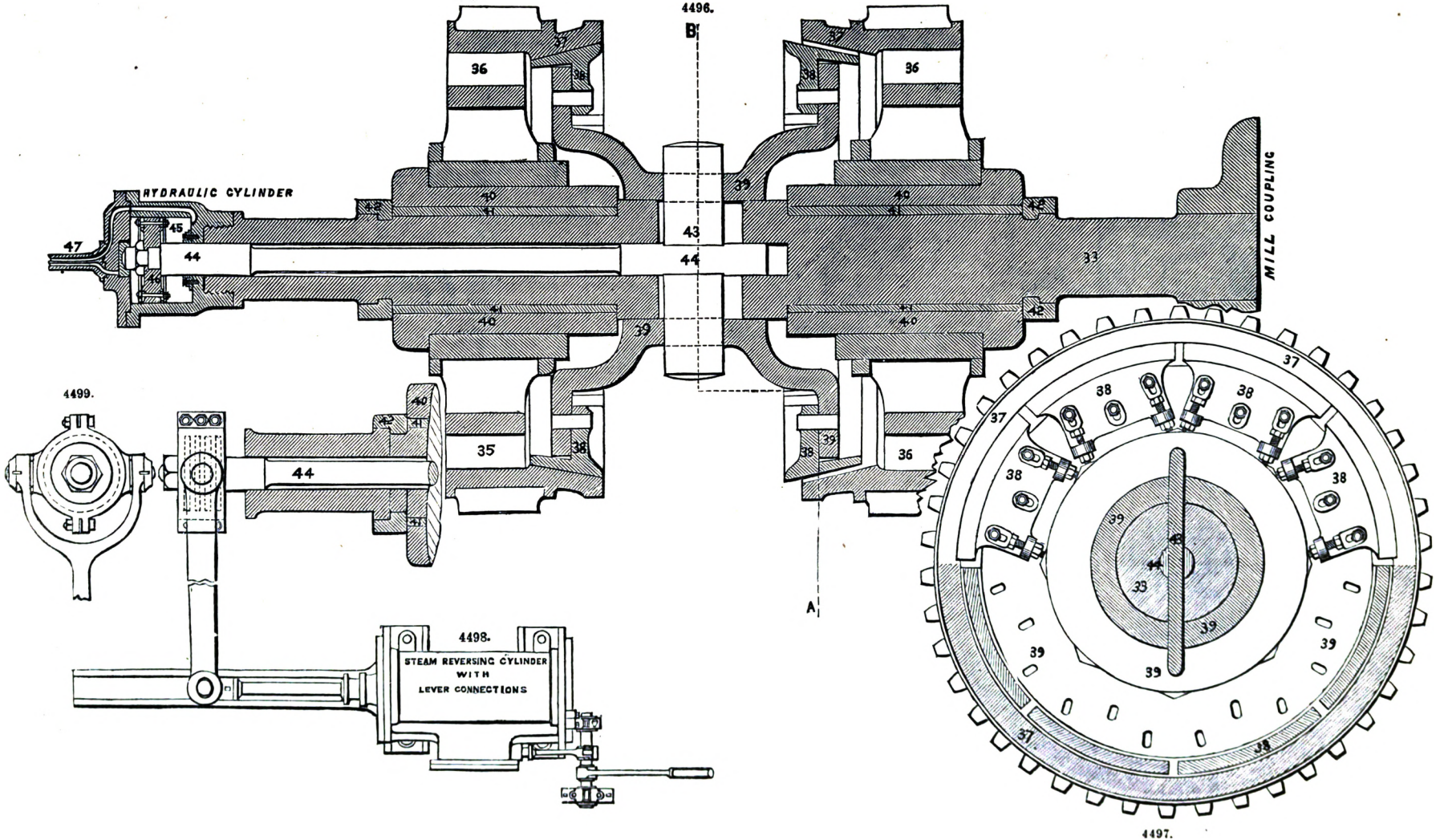

Transverse section on line A B.

4500.

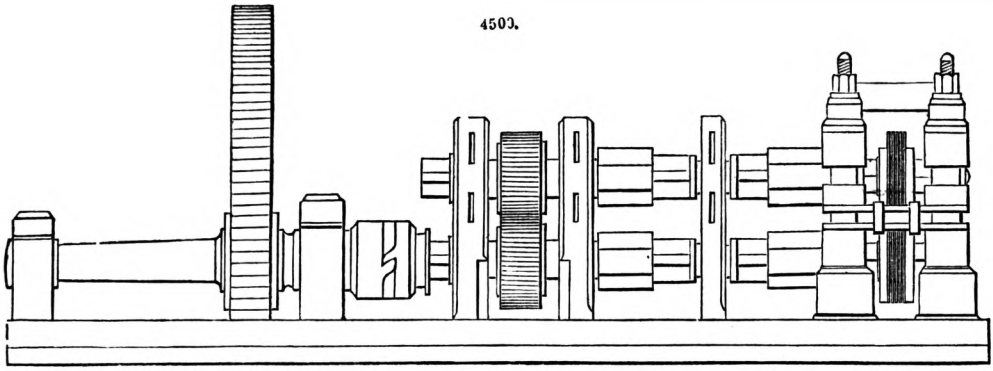

4501.

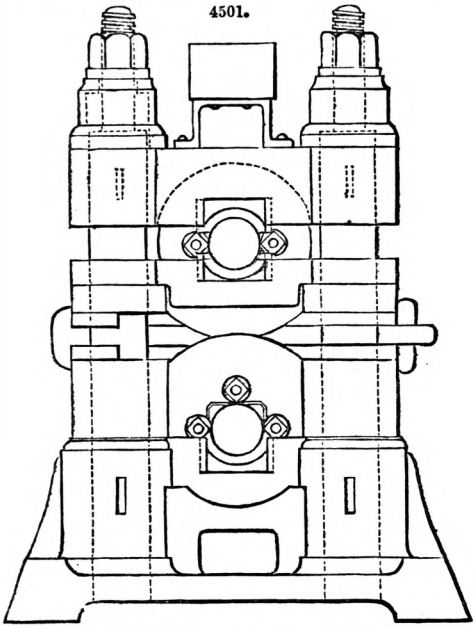

4502.

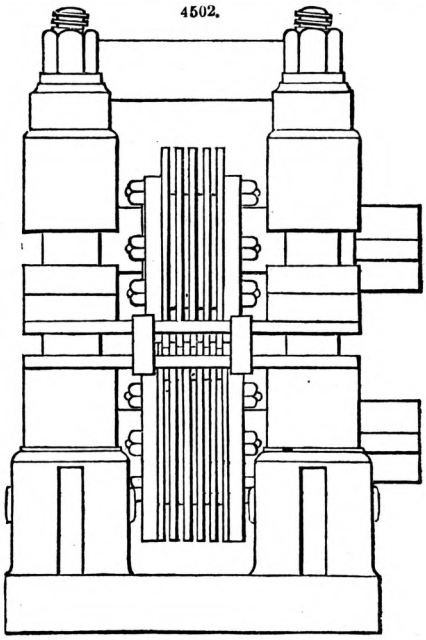

4503.

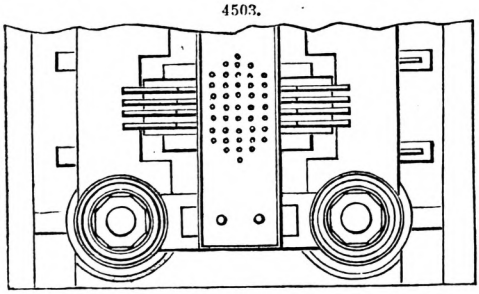

4504.

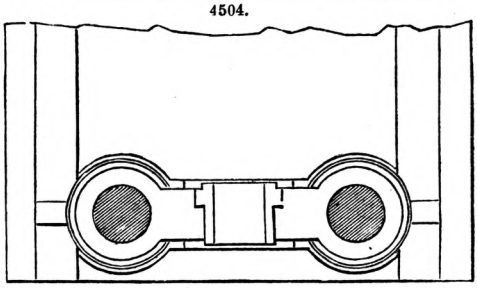

4505.

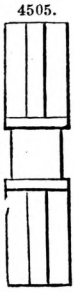

4506.

4507.

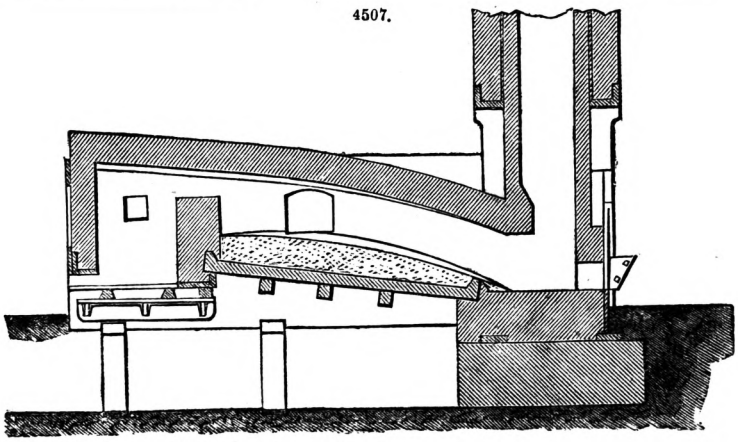

to the rolls. The drawing out, charging a fresh heat, and repairing the bottom, will average sixteen minutes a heat. Piles of this size weigh about 4 cwt. each. At this rate, a heating furnace will work thirty-six piles in the twelve hours, or 83 tons of iron a week.

For the smaller sizes of merchant bars the piles are made about 18 in. long, 3 in. wide, and 2½ to

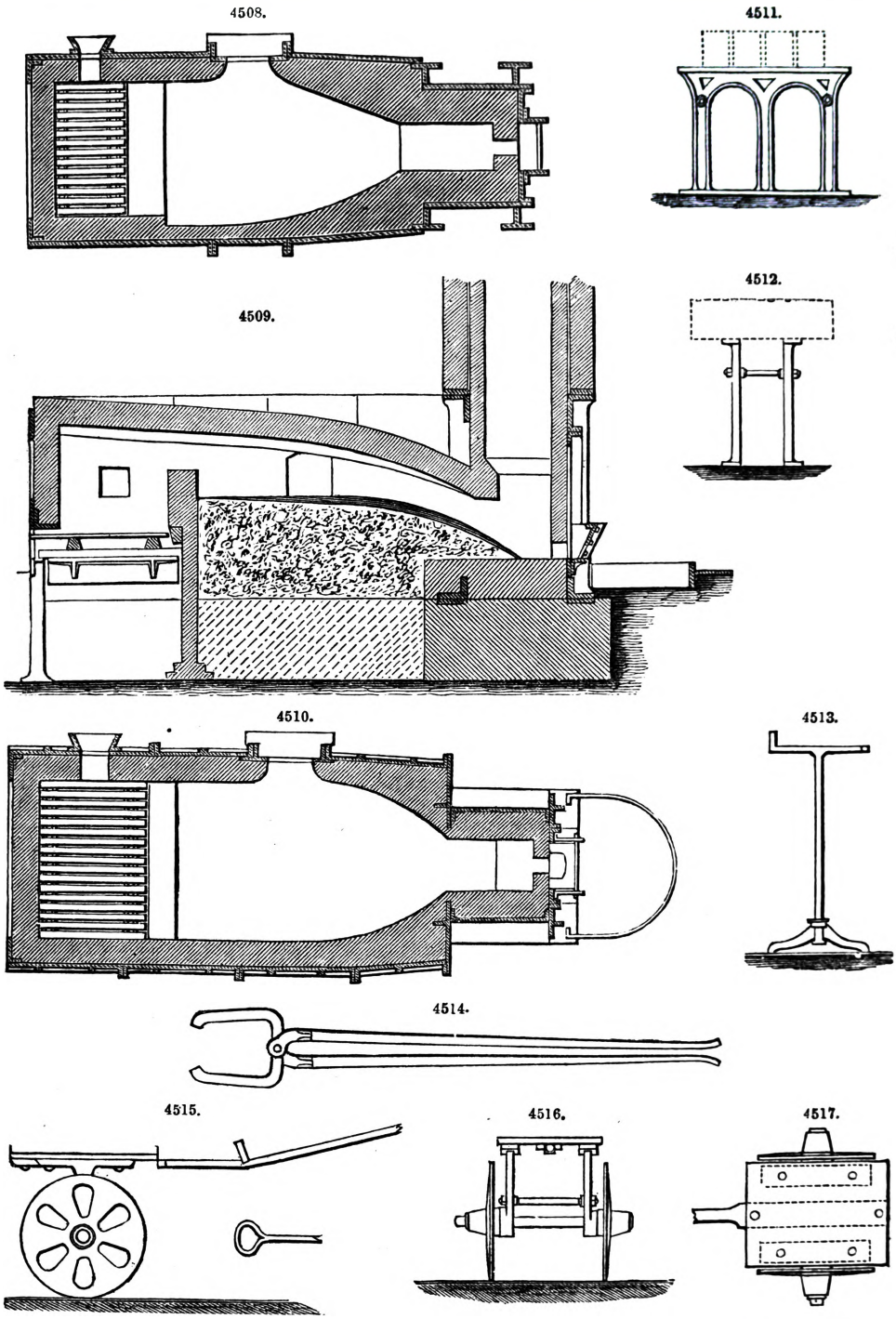

3 in. thick. The heat is composed of sixteen or eighteen piles, which take from twenty-eight to thirty minutes in reaching a welding heat. The time occupied in drawing out the heat, recharging, and repairing, averages twenty-one minutes. A furnace upon piles of such a size working at this rate heats about 31 tons weekly.

The smallest sizes of bars are rolled from solid bolts of manufactured iron, termed *billets*, measuring 12 to 20 in. long by 1¼ to 1¾ in their diameter. Smaller heating furnaces are employed,

and from twenty-five to thirty billets are heated at once. To economize time and reduce the waste of iron, which otherwise would be very great with the smallest sizes, cold billets are charged nearly as fast as the hot ones are withdrawn. Furnaces working on billets for guide iron heat from 15 to 25 tons a week, according to the size of the finished bar.

The loss of weight during the heating process is dependent chiefly on the skill of the baller. With care and a fair average quality of iron the loss will not exceed 80 lbs. a ton on the large piles, 130 lbs. on the smaller sizes, and 210 lbs. on the guide-rolled iron. The yield or consumption of puddle-iron to produce one ton of finished iron is ordinarily much greater than this, but having accurately weighed the iron before and after heating, we find that perfectly sound bars may be produced with a loss no greater than that we have stated.

The consumption of coal in heating the large-size piles averages 7 cwt. to the ton of iron charged; in the smaller sizes, 10 cwt.; and in the smallest merchant bars, 13 cwt.

The formation of the pile, in the arrangement of the pieces, their size, weight, and quality, is a subject of much importance in the manufacture of sound bar-iron. The form of the finished bar, and the purpose to which it is to be applied, require to be carefully attended to in the piling, together with the local character of the iron about to be employed.

A rail pile for the common qualities of rails is usually composed of a bottom piece of No. 2 iron 6 or 7 in. wide by 1 in. thick, on which eighteen or twenty pieces of puddle-iron 3 to 3½ wide by $\frac{5}{8}$ thick are placed, capped by a second piece of No. 2 iron of the same size as the first. If intended for flanch rails, square bars of soft iron are added to the plate of No. 2 to form the flange. The iron for these bars is worked for the purpose from a burden containing little or no red ore or refinery cinder. Thin and broad flanged rails cannot be worked unless attention is paid in the piling to ensure the presence of a very soft tenacious iron in the flange. The greater diameter of the rolls at the body of the rail dragging the thin portion through, throws a strain upon the flanges in the finishing grooves sufficiently great sometimes to tear them off. In heating, also, care is required that the pieces to form the flange are not overheated.

If the rail is large, or the metal unequally distributed, the process of shaping is frequently commenced in the pile, which is made of a diminished width at the head.

For the double-headed, the bridge, and some other varieties of railway iron, a common pile is made, such a proportion of superior iron being used as the specification requires or the manufacturer deems necessary. A portion of the centre is frequently made with pieces of rails cut into short lengths for remanufacture. From their irregular section, however, they do not work in well with flat bars; and to render the pile more solid, puddle-bars are rolled of such a form as will, when combined with the rails, leave the smallest interstices.

In the manufacture of merchant iron of No. 2, or common quality, the pile is composed entirely of puddle-bars laid one on the other. For larger piles, and where the width greatly exceeds the height, a double row of bars is employed; in all cases the pile is rectangular.

The piles for No. 3 iron are made in the same manner, but with No. 2 iron instead of puddle-bars. The superiority of No. 3 to No. 2 is consequently due to the additional reheating and rolling, by which the fibre and general quality of some irons are considerably improved.

In the manufacture of particular varieties, in order to develop the fibre as much as possible, the pile is made short and thick, so that in the subsequent great elongation by rolling the iron may become of a dense fibrous character. For this purpose the short thick pile is evidently superior to any other form, but in consequence of its requiring a longer time to heat, the outside gets burnt before the interior is brought to a welding heat; the manufactured iron consequently is not equal to that produced with a larger pile—it is rarely sound in the centre, and its tensile strength, if tested, will be found to have suffered by the overheating of the external parts.

In the manufacture of large bolts, the pile is sometimes made of a number of bars of a wedge-like section arranged radially around a central bar, forming a cylinder, kept together by thin iron bands. This is heated in the balling furnace and rolled into a bolt of the desired diameter and length. By some mechanical engineers this mode of piling is supposed to ensure a more solid bolt than the ordinary rectangular pile of flat bars. In practice, however, it is found difficult to produce a sound bar from a pile of this kind. Since the centre bar can only receive its heat by conduction from the radial bars, it cannot reach a welding heat till long after the outer parts, and the pile is generally drawn before the centre has arrived at a proper temperature. The result is, that in passing through the rolls the radial bars are firmly welded to each other at their circumference, but very rarely throughout their entire depth; the central bar is elongated with the rest, but is not welded to them.

In piling, care should be taken to have the various pieces forming the pile of the same thickness as nearly as may be practicable. If they differ greatly, both the risk of unsoundness and the loss of iron during the heating will be increased. The thinnest pieces are hot first, and if the pile is drawn at once the weld with the thick bars is rarely sound. On the other hand, if the pile is retained in the furnace until the thick pieces are properly heated, the thinner are overheated, deprived of the protecting cinder, and weld with difficulty. Sufficient attention is seldom paid to this point in the manufacture of railway and other bars.

It has been found that to heat a pile 6 in. thick, composed of two widths and ten thicknesses of puddle-iron, 3 in. by $\frac{5}{8}$ in., in an ordinary balling furnace, so that the whole was brought to a welding heat, required on an average fifty-two minutes. It has been further ascertained that to heat a pile of a single width of puddle-bars in the same furnace, and exposed to a similar temperature, required twenty-seven minutes, and smaller sizes in the same proportion. By these and other experiments, Truran concluded that the time required for heating a pile or mass of iron was nearly in the same ratio as its thickness. Hence the necessity for building the pile of pieces of the same thickness. In a smith's fire, the difference in the thickness of pieces of iron to be welded together is allowed for by partially heating the thicker piece before the other is charged, a mode of working inapplicable to the rapid rate of execution practised in rolling mills.

For some kinds of iron faggoted piles are employed; these are formed in different ways, often by making a box pile of iron plates, and filling the interior with clippings of plates, old chains, or other scraps. They are heated and then rolled, or, what is preferable, hammered well under a heavy hammer, and reheated before being rolled. Hammering improves the quality of scrap-iron.

Angle-iron, tramplates, and T-iron are usually rolled from piles having a portion of the puddle-bars, or No. 2 iron if for best qualities, cut into short lengths, and laid across the pile. If for angle-iron the top and bottom pieces are laid longitudinally, and the centre of the pile built of layers of transverse and longitudinal bars alternately. The power of the iron to resist a lateral strain is increased by cross-piling, and its structure is rendered more homogeneous.

Bars for manufacture into tin plates are required to be of good quality, seldom under best cable; the piles are usually made as for ordinary bars, but some manufacturers require them to be built with layers of bars laid crosswise. Plate-iron which is to be manufactured into hollow ware and Birmingham goods, known by the rollers as *blackplate*, is piled in a similar manner. Large quantities of tinned iron plates have been made from rail ends and mill crops, but such plates cannot be moulded into the more intricate forms of tinware.

Boiler-plates, if manufactured of best iron, were at one time invariably rolled from piles having alternate layers laid crosswise. A cheaper method is extensively adopted. it consists in hammering two blooms together and rolling them direct into a plate. As the blooms are void of fibre, the extension in both directions in rolling results in the production of a plate equally strong in either direction. The quality, however, is no higher than No. 2 iron. For boiler-plate, it is impossible to exercise too much care in the selection of the crude iron, as well as in the subsequent stages of the manufacture.

Ekman's Reheating Furnace, Figs. 4518 to 4522.—Ekman's furnace is a very useful appliance where

4518.

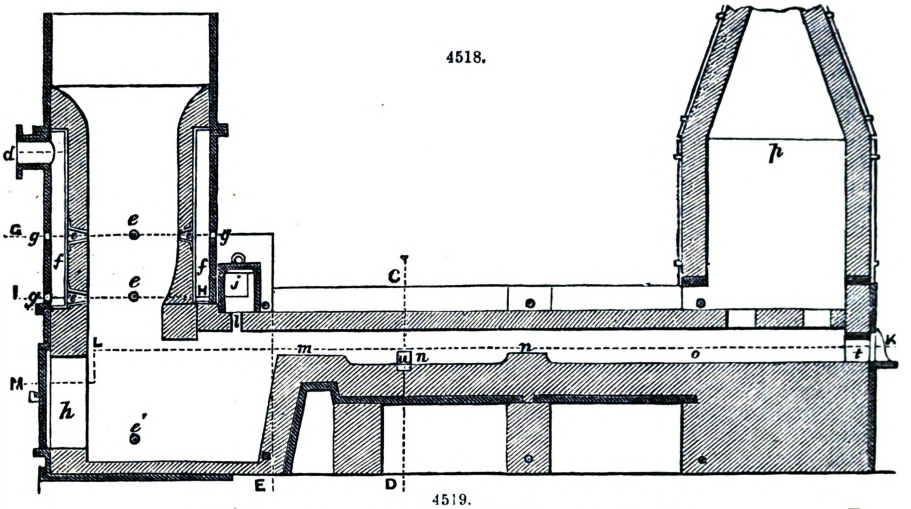

4519.

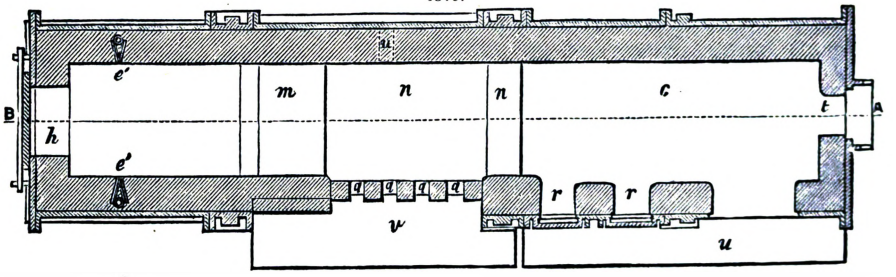

4520.

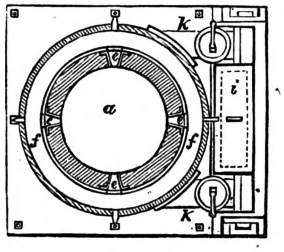

4521.

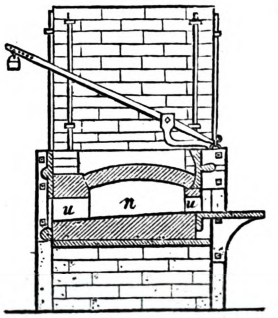

4522.

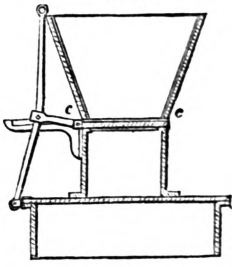

wood charcoal is the fuel employed. Fig. 4518 is a vertical section on the line A B; Fig. 4519. horizontal section on the line K L M; Fig. 4521 vertical section on the line C D; *a* is the gas-

chamber, built of fire-brick, and enclosed within a jacket of cast iron, a free space *f f* being left between the two. In the wall of this chamber are two rows of tuyeres, the upper containing four and the lower three. In the iron jacket is a pipe *d*, through which cold air at a pressure of about 1 in. of mercury is introduced into the space *f f*, the blast in its passage through this space becoming heated to from 90° to 150° C. In the iron jacket, opposite the tuyeres, are corresponding holes *g g*, fitted with movable plugs. On the top of the gas-chamber is fixed a hopper *b*, shown separate Fig. 4522, having a sliding bottom *c c*, through which fuel is supplied, and near the bottom of the chamber are two tuyeres *e' e'*, one on each side. The gas-chamber communicates with the body of the furnace at *m*. In the roof of the furnace, on the right of the fire-bridge, is a series of openings *l l*, connected above with an iron box *i* having an easily movable lid, and communicating with the free space *f f* by two iron pipes *k k* provided with stop-cocks. By this arrangement the air entering through the pipe *d* passes in part into the interior of the gas-chamber and in part into the box *i*, from which it descends through the openings *l l*. When the gas-chamber is filled with ignited fuel, and air is injected through the pipe *d*, carbonic oxide is copiously produced, which in its way towards the fire-bridge *m* is met by currents of heated air from the openings *l l*, and is thus effectually burnt. The iron is heated in the welding chamber included between the fire-bridge *m* and the opposite bridge *n*, and is introduced through the doors *g g*. The heat here is intense. When hot blast is used, the flame scarcely extends beyond the bridge *n*, so complete and rapid is the combustion of the gas. Beyond the welding chamber is a second chamber *o*, where the iron is subjected to a preliminary heating before its introduction into the former; it has two doors *r r* at the side, and a third *t* at the end. In the lower part of the neck *p* any convenient apparatus for heating the blast may be placed. In front of the doors *g g*, *r r* are east-iron plates for convenience of manipulation. The tap-hole through which the cinder flows is shown at *u*.

With respect to the power absorbed in the different operations of iron manufacturing, in the course of experiments having for their object the economical application of power in iron-works, Truran ascertained that the amount absorbed in the various operations was nearly as follows;—

Smelting Lean Argillaceous Ores.—For compressing the blast to a density of 3 lbs. on the square inch, 55 horse-power to 100 tons of iron smelted weekly, or, allowing for friction and leakage in the engine, 66 horse-power. The horse-power being 33,000 lbs. lifted 1 ft. high a minute.

Smelting Carbonaceous Ores.—For compressing the blast to a density of 3 lbs., 22 horse-power to 100 tons smelted weekly, equal to 27 horse-power, including friction and unavoidable loss.

Refinery.—For compressing the blast to a density of 2½ lbs. to the square inch, for refining forge iron in the running-in fire, 13 horse-power for every 100 tons refined weekly, equal to 16 horse-power, including friction and waste.

Puddling Forge.—No. 1. For driving a puddling train, consisting of a pair of 18-in. finishing rolls, a pair of roughing rolls, a double-ended squeezer, and two pairs of cropping shears at 55 revolutions a minute, rolling bars 3 in. by ¾ in., puddled from refined metal. Power expended in keeping the trains and machinery in motion, 41 horse-power. Additional power, when in full work, rolling and squeezing at the rate of 300 tons weekly, representing the mean force exerted in shaping the iron, 34 horse-power. Total power absorbed, 75 horse.

No. 2. For driving puddling train, with rolls and squeezer similar to the above, but running at 82 revolutions a minute, and rolling bars 3 in. by ¾ in. from boiled pigs. Power absorbed by the engine and machinery, 17·5 horse-power. By the roll train running light, 28·5 horse-power. Total power absorbed by engine, machinery, rolls, and squeezer running light, 46 horse-power. Additional power absorbed when rolling and squeezing at the rate of 360 tons weekly, representing the force expended in shaping the iron, 67·5 horse. Total power expended, 113·5 horse-power.

Rolling Mill.—No. 1. For driving rail train, consisting of a pair of 18-in. roughing rolls, a pair of finishing rolls, and intermediate pinions worked by a horizontal high-pressure engine, with cropping shears, eight straightening presses, and saws in connection—the speed of rolls being 85 revolutions a minute, and rolling T-rails. Power absorbed in driving engine, rolls, and all the machinery light, 71 horse-power. Additional power absorbed when rolling, 168 horse-power. Total power driving rail train, capable of making 600 tons of rails weekly, 239 horse-power.

No. 2. For driving 18-in. bar train, consisting of a pair of roughing rolls, a pair of finishing rolls, and cropping shears. Power absorbed by the engine and machinery for three such trains when running light, including power absorbed in driving four rail presses and pair of saws, 52 horse-power. Power absorbed by each train of rolls when running light, 21 horse-power. Additional power absorbed by trains respectively, when rolling 1½-in. bolts, 29·5 horse-power; when rolling 1½-in. squares, 29·5 horse-power; when rolling 4 in. by 1 in. flats, 102 horse-power. Gross power consumed in driving the three trains and machinery loaded, 276 horse-power. Total power, including engine and machinery, absorbed by train of bar rolls rolling flats, 149 horse-power.

No. 3. For driving 12-in. bar mill, a pair of roughing and a pair of finishing rolls, with engine and machinery, at 140 revolutions a minute, light, 26 horse-power. When rolling bolts and squares additional, 23 horse-power.

No. 4. For driving 12-in. train, consisting of a pair of roughing and a pair of finishing rolls, driven at 110 revolutions a minute by independent engine, rolling flats 1½ in. by ⅜ in., 32 horse-power.

No. 5. For driving a train of 8-in. merchant bar rolls, consisting of three roughing, three ovals, and a pair of finishing rolls, working at the rate of 220 revolutions a minute. Power expended in maintaining engine and machinery in motion, 17 horse-power. Power absorbed in running train, light, 24 horse-power. Additional power when rolling ¾-in. flats, 21 horse-power; when rolling ½-in. flats, 14 horse-power. Gross power expended when rolling ½-in. flats, 55 horse-power.

No. 6. For driving 8-in. train similar to the above, with separate engine and machinery, when rolling squares and bolts, 61 horse-power.

No. 7. Power absorbed in driving a pair of rail saws, 4 ft. 6 in. diameter, 820 revolutions a minute, 11 horse-power.

See ATOMIC WEIGHTS. BLAST FURNACE. COAL-WASHING MACHINE. DISTILLING APPARATUS, page 1219. FORGING, *Machinery for.* FURNACE. ORES, *Machinery and Processes employed to Dress.* OVENS. PYROMETER. STEAM-HAMMER. STEEL. TUYERE.

Books upon Iron:—Karsten (C. J.), 'Manuel de la Métallurgie du Fer,' traduit par F. J Culmann, 3 vols., 8vo, Paris, 1830. St. Ange (W. de), 'Métallique Pratique du Fer,' folio and 4to, 1835–8. Dufreynoy (M.), 'On the Use of Hot Air in the Iron Works of Great Britain,' 8vo, 1836. Papers on Iron and Steel, by David Mushet, royal 8vo, 1840. Flachet (E.), Barrault (A.), et Petiet (J.), 'Traité de la Fabrication de la Fonte et du Fer,' 3 vols., 4to, folio atlas of plates, Paris, 1842–46. 'Report of the Commissioners Appointed to Inquire into the Application of Iron to Railway Structures,' 2 vols., small folio, 1849. 'Transactions of the North of England Institute of Mining Engineers,' 1852 to 1871. Bauerman (H.), 'A Treatise on the Metallurgy of Iron and Steel,' 8vo, London, 1856. Rogers (S. B.), 'An Elementary Treatise on Iron Metallurgy,' 8vo, London, 1858. 'The Iron Manufacture of Great Britain,' by W. Truran, 4to, 1862. Percy (Dr. John), 'Metallurgy,' vol. 2; 'Iron and Steel,' 8vo, 1864. Jordan (S.), 'Album du Cours de Métallurgie professé à l'École Centrale des Arts et Manufactures: Fabrication de la Fonte,' 40 plates, folio, 1864–5. Coulthard (H. C.), 'Blast Engines,' folio, London, 1867. "Iron," from 'Watts' Dictionary of Chemistry,' 1868. Crookes and Röhrig, 'Metallurgy,' vol. 2; 'Iron,' 8vo, 1869. 'Iron, its History, Properties, and Process of Manufacture,' by W. Fairbairn, 8vo, 1869. Köhn (F.), 'Iron and Steel Manufacture,' folio, 1869. 'The Metallurgy of Iron and Steel, Theoretical and Practical,' by H. F. Osborne, royal 8vo, Philadelphia, 1869. Schinz (C.), 'Researches on the Action of the Blast Furnace,' translated by W. H. Maw and M. Müller, crown 8vo, 1870. 'A Treatise on Roll Turning for the Manufacture of Iron,' by Peter Tunner, translated and adapted by John B. Pearse, text 8vo, plates, folio, New York, 1870. Jullien, 'Traité Théorique et Pratique de la Métallurgie du Fer,' 4to and folio, Paris. Valerius (M. B.), 'Traité de la Fabrication de la Fonte,' 8vo and folio. 'Chemical Phenomena of Iron Smelting,' by I. Lowthian Bell, 8vo, 1872. 'The Journal of the Iron and Steel Institute,' 8vo, and the admirable 'Treatise on Metallurgy,' by F. Overman, published by D. Appleton and Co., New York.

IRON SHIPBUILDING. FR., *Construction des Navires en fer;* GER., *Kunst des Baues der eisernen Schiffe;* ITAL., *Costruzione delle navi di ferro;* SPAN., *Construccion de buques de hierro.*

The extended and increasing use of iron ships at the present day, after the lapse of about forty years since they were first fairly introduced, renders their construction a subject of importance to the engineer, as well as the naval architect; for the application of iron in place of wood to the structure of ships has necessitated a more careful use of the material employed, and a more correct and perfect application of the mechanical principles that are involved in the construction. It is not intended in the present article to describe novelties of construction in iron ships, so much as to investigate certain systems that are approved and practised.

John Vernon, of Liverpool, in a paper on the construction of iron ships in the Trans. I. M. E., justly remarks that the main points of superiority of iron ships over those built of wood consist in the superior strength, greater durability, and less cost of iron ships, together with their larger carrying capability, greater facility of construction, and the more certain supply of the material.

The greater strength of iron ships is shown in daily practice in numerous ways; and it is also shown by the fact that in many modern wood ships it has been found desirable to introduce the use of iron for bulkheads, beams and stringers, and even for the framework itself of the whole structure. But this arrangement it is considered falls very far short in point of strength of a vessel built entirely of iron; and the only ground upon which such a mixed kind of structure can be advocated is the freedom from fouling possessed by wood vessels when they are coppered, which is an advantage existing in the mixed structure on account of the shell portion being of wood.

The greater comparative durability of iron for the construction of ships arises mainly from its freedom from the decay to which wood is always liable in consequence of its being unavoidably subject to constant and extreme variations of temperature and moisture. Another important source of this greater durability is to be found in the firm and substantial union of the several parts of an iron ship by means of riveting, which effectually prevents that *working* under heavy strains to which all wood ships are more or less liable.

The larger carrying capability of the iron ship arises first from the reduced weight of the structure, and secondly from the increased internal capacity with the same external dimensions and model as the wood ship. This is shown by the following figures of comparison of a 1200-ton ship of the two constructions. First as to weight. The wood ship with rigging and all outfit weighs say 18 cwt. a ton measure, equal to 1080 tons for the whole ship. The iron ship completed in a similar way weighs only say 15 cwt. a ton measure, which would be equal to 900 tons for the whole ship. Hence the 1200-ton iron ship will carry at the same draught 180 tons additional dead weight of cargo; and this will be equal to 11 per cent. addition upon the whole weight of 1600 tons which is actually carried by a nominal 1200-ton wood ship; or if no greater weight be carried, the iron vessel will float at 13 in. less draught of water. Secondly as to capacity. The wood ship has an internal capacity of 93,343 cub. ft., or, at 100 ft. a ton, 933 tons. The iron ship, because of the reduced thickness of the sides and bottom of the hull, has a capacity of 1108 tons. Hence in regard to capacity the gain of the iron ship is 175 tons, or about 19 per cent. over the wood ship; and there will consequently be space enough to contain the increased weight of 11 per cent. which the iron ship is capable of carrying by reason of its lighter hull.

With respect to the actual strength of an iron ship, its capability of bearing strain, and whether the distribution of material is judicious and efficient, considering the strains to which it is

subjected, the case will be taken of a ship of 1200 tons, as shown in side elevation, in Figs. 4523, 4524, the dimensions of which are 205 ft. length, 34½ ft. beam, and 23 ft. depth of hold; and the

4523.

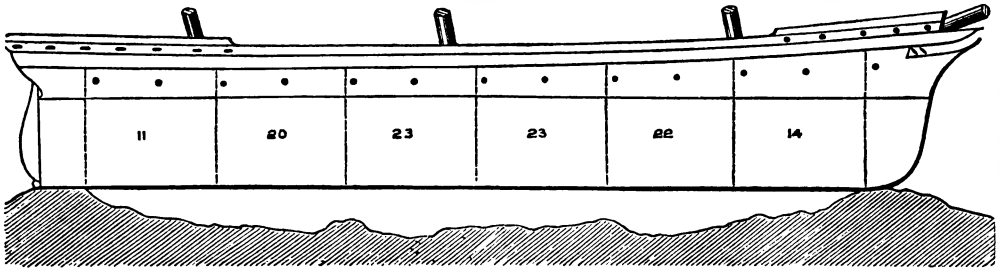

4524.

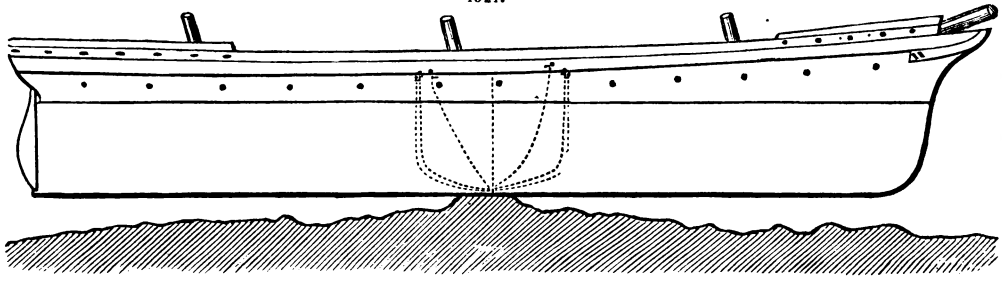

ship is supposed to be built to class A 1 at Lloyd's for twelve years, or for twenty years with the Liverpool Underwriters' Association. The transverse section of such a ship is shown to a larger scale in Fig. 4525, the section of the iron being shown black; and the sectional area of iron is as follows;—

		Sq. Ins.
Stringer-plates, tie-plates, and angle-irons on main deck ..	A	77
,, ,, ,, on lower deck ..	B	55
Sheerstrakes	C	61
Sides down to top of bilge	D	298
Turn of bilges and flat of bottom	E	379
Garboard strakes	F	59
Middle keelson	G	42
Sister keelsons	H	43
Bilge keelsons	I	20
Lower hold stringers	K	41
Keel-piece	L	26
Total		1101

In the above sectional area the deck planks, amounting to 1770 sq. in., have been excluded from the calculation, because although aiding considerably when in compression they are of very little value for tension; and both cases have to be taken into account.

Taking first the extreme case of strain upon the vessel when supported only at the ends, and allowing 10 ft. length at each end for the support, the ship will be as shown in the diagram, Fig. 4523, with a length of 185 ft. between the supports; in this case the bottom of the vessel is in tension and the top in compression. The displacement of such a vessel at her loaded draught of 20 ft. is 2703 tons, and this weight is made up as follows;—

		Tons.
Iron in hull for 1166 tons measurement, at 10½ cwt. a ton ..	612	758
Woodwork ,, ,, at 2½ cwt. a ton ..	146	
Rigging and outfit	108	1945
Water and general stores	35	
Weight of cargo	1802	
Total		2703

The cargo and other load carried is thus seen to amount to 1945 tons, which load is unequally distributed over the length of the ship in consequence of the larger capacity in the midships as compared with that at the two ends; and the proportionate distribution as measured from actual sections of an existing ship is shown approximately by the figures marked upon the side elevation, Fig. 4523. The length unsupported being divided into six equal portions, the respective cargo capacities or loads of these are in the proportions of 11, 20, 23, 23, 22, 14 respectively, proceeding from the stern to the bows. The result obtained by taking the mean effect of these several loads at the centre of the vessel is that the strain produced at the centre by the distributed load

amounts in this case to 74 per cent. of the total load, instead of 50 per cent. or one-half the load as would have been the case if the distribution of the load had been uniform throughout the entire length. Hence the total distributed load carried being 1945 tons, as ascertained above, the equivalent centre load will be in this case 74 per cent. of that amount, or 1440 tons; and the additional weight of the vessel itself, 758 tons, may be considered as equivalent to a load of one-half the amount, or 379 tons at the centre; making together a total load at the centre of 1819 tons, one-half of which, or 909 tons, is acting at each end by tension on the lower part of the vessel, with a leverage of 92½ ft., or half the length of the unsupported portion of the vessel.

As the form in which the material is placed in the sectional area of the ship is necessarily determined by the carrying and floating requirements of the ship, and is consequently not free to be arranged in the manner that would simply give the greatest strength as a girder, this case does not admit of satisfactory comparison with a wrought-iron box-girder for calculation of the transverse strength. It may be convenient consequently to consider the strains on the whole sectional area as if acting upon a solid girder composed of the material that exists at each point in the depth of the vessel, concentrated into a solid girder of the same sectional area and depth. The diagram, Fig. 4526, shows the total sectional area of the vessel drawn to double the scale of Fig. 4525 in area, or $\frac{1}{5000}$ of the actual area of section. The metal is here condensed into the form of a flanged girder for comparison of the areas of resistance in the several portions, in order to deduce an approximate neutral axis for the whole section; and the positions of the several portions of the girder are made to correspond with the exact positions in the general section of the vessel itself, Fig. 4525. The sectional areas of iron at the main deck, lower deck, and bottom,

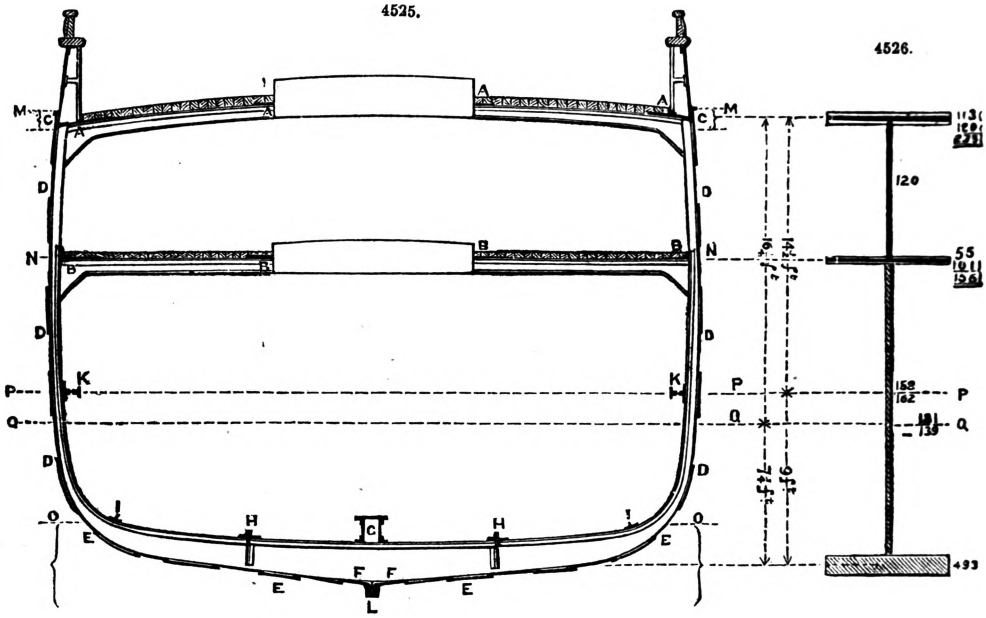

are 113, 55, and 493 sq. in. respectively. The top flange of 113 sq. in. area is made up of the main deck plates and angle-irons A of 77 sq. in., and 36 sq. in. of the sheerstrakes C from the top M downwards; the bottom flange is taken to include the entire section of iron in the bottom E E of the vessel, from the keel L up to the points O O at turn of bilge on either side, together with the five keelsons G, H H, and I I. The intermediate areas of the sides are 120 sq. in. between the upper and lower decks, from the sheerstrakes C down to the lower deck N; and 320 sq. in. from the lower deck N down to the point O, at which the bottom is considered to begin; the latter area being divided into two portions of 158 and 162 sq. in. respectively above and below the neutral axis P P. Then these several areas multiplied into their respective vertical distances or leverages give the upper dotted line P P as the approximate neutral axis, about which the moments of the areas above and below are equal; taking the total compression resistance of the upper portion as $\frac{5}{6}$ of the tensile resistance of the lower portion, since the ultimate strength a square inch of wrought iron to resist compression is $\frac{5}{6}$ of its strength for tension.

In this case the decks being in compression, and the 4 and 3 in. planks of which they are composed being fixed tight and solid together, the timber will contribute materially to the strength of the ship. The resistance of the pinewood to compression may be taken at 3 tons a square inch: and the compression strength of wrought iron being 17 tons a square inch, or $\frac{5}{6}$ of its tensile strength of 20 tons, the strength of the wood is about $\frac{1}{6}$ that of wrought iron; the value of the timber may therefore be safely taken at $\frac{1}{8}$ of the strength of wrought iron a square inch. Hence the sectional area of the main deck planking being 960 sq. in., $\frac{1}{8}$ of this, or 120 sq. in., has been added in the above calculation to the area of the top flange of the girder in Fig. 4526, as shown by the outer lines surrounding the shaded portion, making the total area of the top flange 233 sq. in. For the lower deck of 810 sq. in. sectional area, $\frac{1}{8}$ of this, or 101 sq. in., has similarly been added, making a total area of 156 sq. in.

The neutral axis P P thus found is situated 9 ft. above the centre line of the bottom portion,

Figs. 4525, 4526; and the strain tending to produce fracture at the centre of the vessel will therefore be 909 tons × 92½ ÷ 9 = 9343 tons. Then, assuming this strain to be resisted by all the portions in tension in proportion to their respective distances from the neutral axis P, the effective area resisting by tension will be 493 sq. in. for the bottom portion, and ⅓ of 162, or 54 sq. in., for the lower sides, since the centre of gravity of the lower sides, from the neutral axis P down to the point O in Fig. 4525, is only a little more than one-third of the way down from the neutral axis P to the centre line of the bottom portion, as seen in Fig. 4525. Hence the total effective area-resisting tension is 547 sq. in., on which the above load of 9343 tons gives a strain of 17 tons a square inch upon the iron.

This calculation is on the extreme supposition of the vessel being entirely out of the water, and supported only at the two extremities; but practically the vessel, when carrying her cargo, is supported from end to end by the water, excepting to the extent that this support may be partially withdrawn by the waves and other causes, producing an inequality of immersion. It has to be observed that, although the weight of the whole vessel is balanced by its displacement, the extreme ends are very much heavier than their own displacements, and consequently a larger weight is left unsupported at the ends; and the effect of this imperfect support of the ends of the vessel while afloat, inasmuch as it throws a strain of compression on the bottom, will to that extent reduce the strain of tension to which the bottom of the vessel is exposed in the case under consideration, when she is supported at the ends only.

Considering the opposite case of the vessel being supported only at the centre, as in Fig. 4524, the strains on the vessel will then be reversed: the top will be in tension and the bottom in compression. In this case the effect of the unequal distribution of the load, taken from the same data as before, will be to produce a strain corresponding to a load at the ends of the vessel amounting to only 44 per cent. of the total load, instead of 50 per cent., or one-half, as would have been the case if the load had been uniformly distributed throughout the entire length. The total distributed load carried being 1945 tons, as before, the equivalent load at the ends will in this case be 44 per cent. of that amount, or 856 tons, acting at the two ends; and the additional weight of the vessel itself—758 tons—being taken, as before, to be equivalent to one-half that amount, or 379 tons at the two ends, these make together a total load at the two ends of 1235 tons, one-half of which or 617 tons, is acting at each end by tension on the upper part of the vessel, with a leverage of half the unsupported length of the vessel, or 92½ ft., as before.

The neutral axis in this case, found in the same manner as before, but omitting from the calculation the sectional area of the decks which are now in tension, is shown by the lower dotted line Q Q, Figs. 4525, 4526; it is situated at a depth of 16¼ ft. below the centre of the upper portion, or 21 in. below the previous neutral axis P, thus dividing afresh the 320 sq. in. area of the lower sides from N to O, Fig. 4525, into two portions of 181 and 139 sq. in. respectively above and below the neutral axis Q, as seen in Fig. 4526. The strain tending to produce fracture at the centre of the vessel will therefore be 617 tons × 92½ ÷ 16¼ = 3512 tons. Then the effective area resisting by tension, found in the same manner as before, will be 113 sq. in. for the main deck portion, together with ¾ of 120, or 90 sq. in., for the top sides between the decks, ½ of 55, or 27 sq. in., for the lower deck portion, and ¼ of 181, or 45 sq. in., for the sides below the lower deck; making a total effective area of 275 sq. in. resisting by tension. Hence the strain produced by the above load of 3512 tons will be 13 tons a square inch upon the iron.

It may be observed that, although this is an extreme case, it is by no means imaginary as regards the strain which a vessel has to bear continually when floating in the water. For the effect of the imperfect support of the ends of the vessel while afloat, which was previously referred to, is to cause a strain on the transverse area of the midship section similar in action to that caused by the vessel being supported in the middle alone, entirely out of the water, and differing only in degree.

In order to ascertain the comparative strength of iron and wood ships under the two extreme conditions of strain, the same calculation will now be applied to a wood ship of the first class of the same size—1200 tons—of which a transverse midship section is shown in Fig. 4527, to the same scale as the section of the iron ship in Fig. 4525. In Fig. 4528 is shown as before, condensed into the form of a solid girder, the area of section of the wood ship, drawn to double the scale in area of Fig. 4527, or $\frac{1}{5000}$ of the actual area of section. The bottom flange of the girder, Fig. 4528, is taken to include all the section of material in the bottom of the vessel, from the keel up to the points R R on either side in Fig. 4527. The actual areas of each portion of the section are as marked upon the drawing, Fig. 4528, namely, 1011 and 1074 sq. in. in the main deck and lower deck portions respectively, exclusive of the decks themselves; 764 sq. in. in the sides between the upper and lower decks; 1736 sq. in. in the lower sides from the lower deck down to the point R, where the bottom is considered to begin; and 5216 sq. in. in the bottom. In these areas the ceiling or lining of the hold, being constructed of 4-in. planking secured to the frames of the ship, has been included as acting efficiently both in compression and tension.

When the vessel is supported only at the ends, having the bottom in tension, the main and lower decks, of 944 and 920 sq. in. area respectively, have to be included in the compression resistance, as in the iron ship; thus the areas of the main and lower deck portions are here increased to 1955 and 1994 sq. in. respectively, as shown by the outer lines surrounding the shaded portion in Fig. 4528. The neutral axis in this case is shown by the lower dotted line P P; it is obtained in the same manner as before in the iron ship, by multiplying the several portions of the section, Fig. 4528, into their respective leverages or vertical distances from the line P P, so as to make the moments equal above and below that line; the only difference for the wood ship is that here the ultimate resistance of the timber to compression is taken as three-fourths of its resistance to tension. This gives the neutral axis P at 6¾ ft. above the centre line of the bottom flange of the girder in Fig. 4528, dividing the lower sides into two portions of 1041 and 695 sq. in. respectively above and below the neutral axis.

The weight of the 1200-ton wood vessel without cargo is 18 cwt. a ton measure, or 1080 tons

total, as previously stated. Deducting 143 tons for the weight of the rigging, outfit, water, and stores, the same as in the iron vessel, the weight of the hull is 937 tons; half of which, or 468 tons, is therefore taken at the equivalent load at the centre. The internal capacity of the wood ship having been already stated to be only 933 tons as compared with 1108 tons capacity of the iron ship, the total distributed load of 1945 tons carried by the iron ship will be reduced in the same proportion, amounting to 1638 tons; and the equivalent centre load being 74 per cent. of the distributed load, as before, amounts in this case to 1212 tons. The total centre load is therefore 1680 tons, or 840 tons at each end of the ship, with a leverage of half the unsupported length of the vessel, or 92½ ft.

Hence the strain tending to produce fracture at the centre of the vessel will be 840 tons × 92½ ÷ 6¾ = 11511 tons tension upon the portions of the section below the neutral axis, Fig. 4528. The effective area resisting this strain is 5216 sq. in. for the bottom portion, and ¼ of 695, or 174 sq. in., for the sides below the neutral axis, since the centre of gravity of the sides, from the neutral axis P down to the point R in Fig. 4527, is only one-fourth of the way down from the neutral axis P to

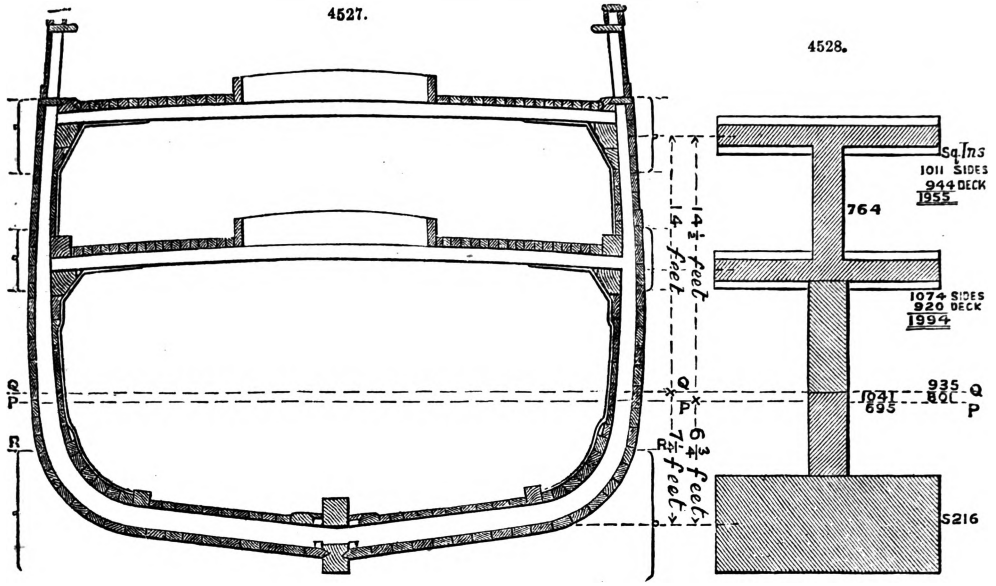

the centre line of the bottom portion, as seen in Fig. 4527. The total effective area-resisting tension is therefore 5390 sq. in., on which the above load of 11,511 tons produces a strain of 2⅛ tons a square inch.

In the opposite case of the vessel supported only at the centre, the top is in tension, and the decks are therefore not included in the resistance. The neutral axis, found as before, is shown by the upper dotted line Q Q, Figs. 4527, 4528, which is situated 14 ft. below the centre line of the upper portion, Fig. 4228, 6 in. above the previous neutral axis P; thus dividing afresh the 1736 sq. in. area of the lower sides into two portions of 935 and 801 sq. in. respectively above and below the neutral axis Q, as in Fig. 4528. The weight of the hull—937 tons—is equivalent to half that amount, or 468 tons at the two ends; while the distributed load of 1638 tons in the wood ship is equivalent to 44 per cent. of that amount, or 721 tons at the two ends. Hence the total load at the two ends is 1189 tons, one-half of which, or 594 tons, is acting at each end by tension on the upper part of the vessel, at the leverage of 92½ ft. as before.

The strain tending to produce fracture at the centre of the vessel is therefore 594 tons × 92½ ÷ 14 = 3925 tons tension upon the portions of the section above the neutral axis Q, Fig. 4528. The effective area to resist this strain is 1011 sq. in. for the main deck portion, together with ¾ of 764, or 573 sq. in., for the top sides between the decks, ⅜ of 1074, or 403 sq. in., for the lower deck portion, and ⅐ of 935, or 134 sq. in., for the sides below the lower deck. This gives a total effective area of 2121 sq. in. resisting by tension, upon which the above load of 3925 tons produces a strain of 1⅞ ton a square inch.

Thus if the average tensile strength of all the wood employed in the longitudinal timbers and decks of the ship, namely, teak, greenheart, elm, and pine, be taken at 6 tons a square inch in the solid material, and the effective strength be taken at one-third of that amount, or 2 tons a square inch, in order to allow for the joints, the result obtained is that the greatest possible strain to which it could be exposed, namely, in the case of the vessel being supported at the ends only, is 2⅛ tons a square inch, or 6 per cent. in excess of the tensile strength of the material; while in the other case of the vessel being supported only at the centre, the strain of 1⅞ ton a square inch is 6 per cent. less than the strength of the material. In the iron ship, if the tensile strength of the material be taken at 20 tons a square inch, and the effective strength at three-fourths of that amount, or 15 tons a square inch, the greatest strain to which it can be exposed, namely, 17 tons a square inch in the case of the vessel being supported at the ends, exceeds the strength of the material by 13 per cent.; and in the opposite case of the vessel supported at the centre, the strain of 13 tons a square inch is 13 per cent. less than the strength of the material.

The general result therefore as regards the comparative strength of the iron and wood ships appears to be that in the position causing the greatest possible strain in each case, namely, when the ship is supported at the ends only, the strength of the material is deficient for resisting the strain by about one-eighth in the iron ship and one-sixteenth in the wood ship; and in the other position of strain, namely, when the ship is supported in the middle, there is an excess of strength in the material of about one-eighth in the iron ship and one-sixteenth in the wood ship.

The iron used in the framework of iron vessels is applied in various forms of section of single or compound structure. Those which are frequently employed are shown in the sections, Figs. 4529 to 4550.

For keels, the section shown, Fig. 4529, is in common use, as seen at L, Fig. 4525. It consists of a plain parallel bar about 8½ in. deep by 3 in. thick for a 1200-ton ship. This is forged in lengths of about 20 ft., and then pieced up by welds into two or three lengths for the entire ship, having scarfed joints of a length of eight times the thickness of the keel, which gives room for as many rivets as are required to correspond with the section of the keel. Fig. 4530 is a deep keel of plate-iron, made by putting two or more plates side by side, breaking joints in every way. The plates are 1 to 1½ in. thick and from 3 to 4 ft. deep; they are adopted when a forging of the required size would be too large and heavy, say for vessels of 2000 tons and upwards; and where the scarfing would also be comparatively imperfect. This arrangement is specially adopted in order to be made to serve as a keelson as well. The floor angle-irons T T have to be turned up at the foot so as to be riveted through and through the keel-plates; and the floor-plates U U are thus made in two pieces, one on each side of the keel. The keelson angle-irons V V are put on the top of the floor-plates and riveted through and through the top edge of the keel-plates. Fig. 4531 is the dished keel, specially suited to flat-bottomed vessels, in which it forms an excellent trough for drawing off the last drop of bilge water. It is made of plates about 1 in. thick, bent or rolled to the required section. The trough is made of a shape to suit the circumstances, from 6 to 8 in. wide and 2 to 4 in. deep. Fig. 4532 shows an arrangement with a flat plate as a substitute for a keel for flat-bottomed vessels, where the draught is limited to the smallest possible amount; and a water-course is obtained by an opening W in the bottom edge of the floor-plate U and by cranking up the angle-iron to correspond.

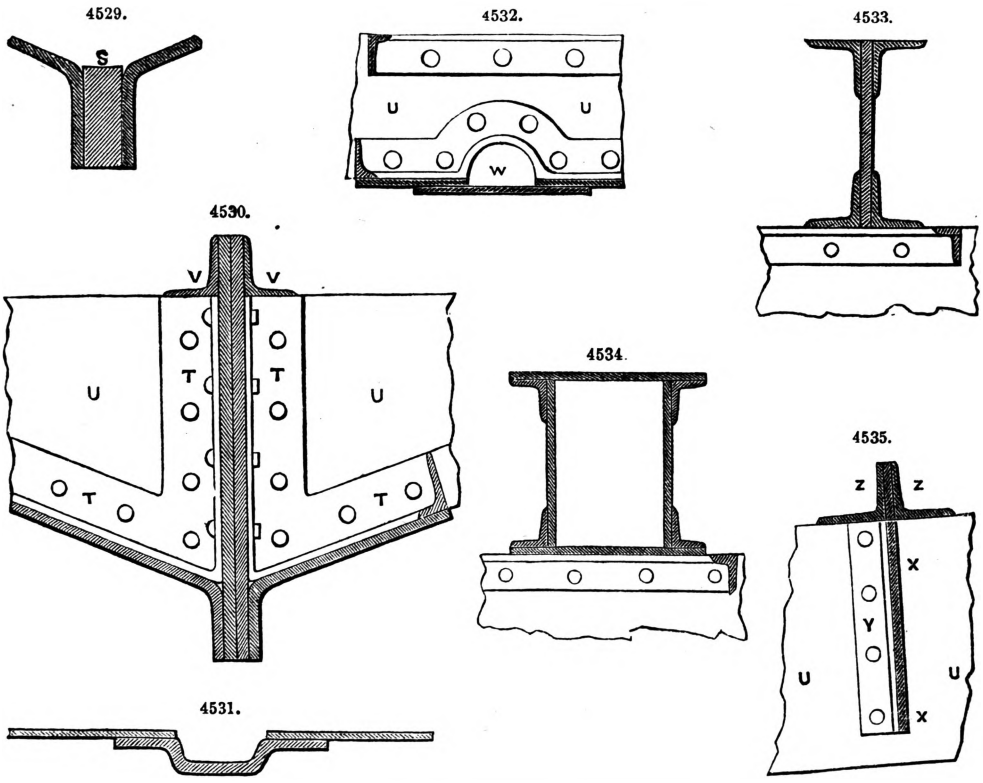

For keelsons, the section, Fig. 4533, is that required by Lloyd's rules, and is two-thirds the depth of the floor-plates. Fig. 4534 shows the box keelson, seen at G, Fig. 4525, which is recommended as superior to the preceding, its advantages being the larger section of the top member and the lateral stiffness obtained by the box form. Fig. 4535 is what is called the *intercostal* keelson, seen at H H in Fig. 4525, which is of great value in keeping the floor-plates in a vertical position, so as to retain their best strength. It consists of short pieces of plate X, introduced between the floor-plates U, and riveted with angle-irons Y to each of them; thus forming a continuous line fore and aft, with double angle-irons Z back to back, riveted through the top edge of all the intercostal plates. Fig. 4536 shows a box keelson which is also intercostal; this is made either with double intercostal lines of plates X X, as shown in the section, or with a single line, by one side only of the keelson being let down between the floor-plates, instead of both sides.

Figs. 4537 to 4542 show sections of different forms of stringers. Fig. 4537 is a gunwale stringer, such as is usually adopted, as seen at A in Fig. 4525. The word gunwale is employed to designate the group of iron used along the edge of the main deck at the sheerstrake C; and the horizontal flat plate A, Figs. 4537 to 4539, is called the gunwale stringer, and the angle-iron B

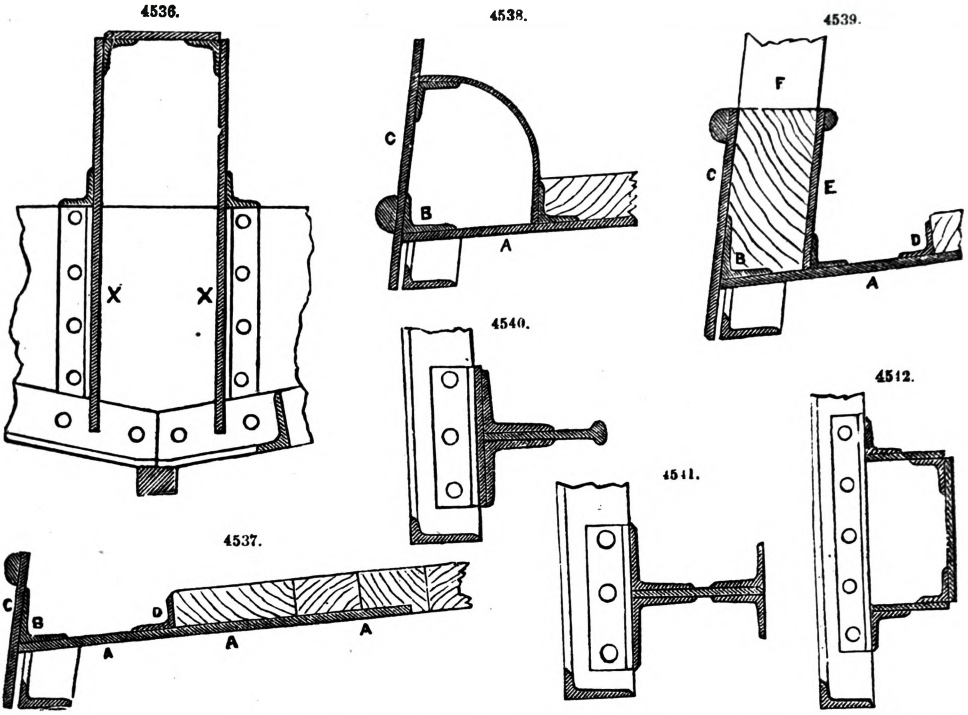

the gunwale angle-iron. The size of the gunwale stringer A is 36 in. wide by $\frac{5}{8}$ in. thick in the midships for a vessel of 1200 tons. The inner angle-iron D is specially valuable as forming an abutment for the edges of the deck-planks. Fig. 4538 is a box form of gunwale, which has special stiffness and solidity. Fig. 4539 shows a form of gunwale with a vertical stringer E, consisting of an inner plate set up on edge; the groove between this stringer and the sheerstrake C is made to receive the wood stanchions F for the bulwarks, and between the stanchions the groove is filled up solid with wood. Figs. 4540, 4541, are two forms of stringer specially suited for lower hold stringers, or for any position where they cannot have the advantage of being connected to the end of deck-beams; Fig. 4541 is seen in position at K K in Fig. 4525. Fig. 4542 is a box form of lower hold stringer, suited for similar positions to Figs. 4540, 4541, but capable of being made of much greater strength and stiffness.

Figs. 4543 to 4548 are sections of different forms of deck-beams; amongst which may be specially noticed Fig. 4544, because with this section the largest amount of strength is obtained

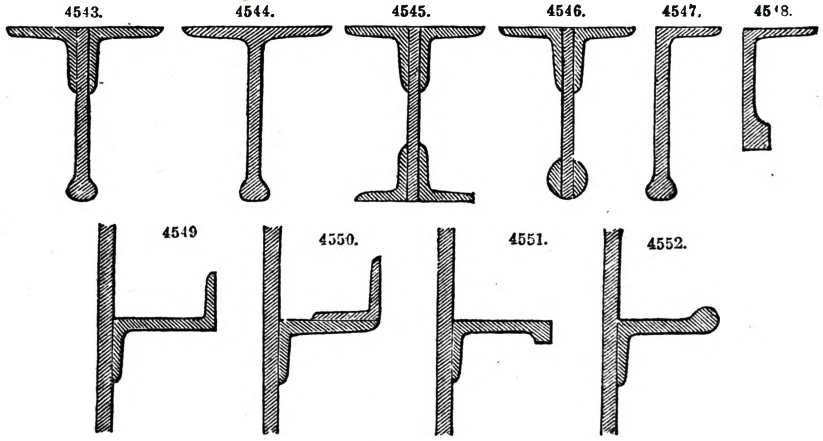

with the least weight of material, since the iron is in the form best suited for bearing a superincumbent weight, and there is no loss of material by laps of riveted joints.

Figs. 4549 to 4552 are sections of different forms of frame iron. Of these, Fig. 4550 is commonly

used; and it possesses the advantage of the reversed angle-iron, being curved off at the bilges across the bottom of the vessel, to form the top of the floor-plates. The three other sections, Figs. 4549, 4551, 4552, are decidedly better, so far as the side frames are concerned, but are not so well adapted to combine in the formation of the top of the floorings.

The use of iron in the construction of vessels affords great facility for obtaining the necessary strength in keels, stem and stern posts, screw port frames, and other parts, by the introduction of large forgings. An illustration of this is afforded by the stern-post and screw port frame of the 'Great Britain,' shown in Figs. 4553 to 4555.

4553.

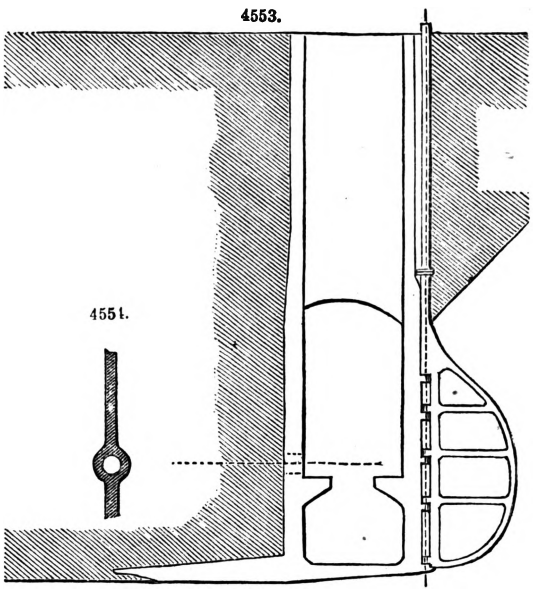

4554.

4555.

The application of iron for building vessels is peculiarly advantageous in the special class of screw colliers with hollow bottoms for carrying water ballast. The traffic in which these vessels are engaged does not usually provide any return freight, and a great commercial advantage is obtained by this method of water ballasting for the return voyage, which is accomplished without any delay and with but little cost. Figs. 4556, 4557, show transverse and longitudinal sections of

4556.

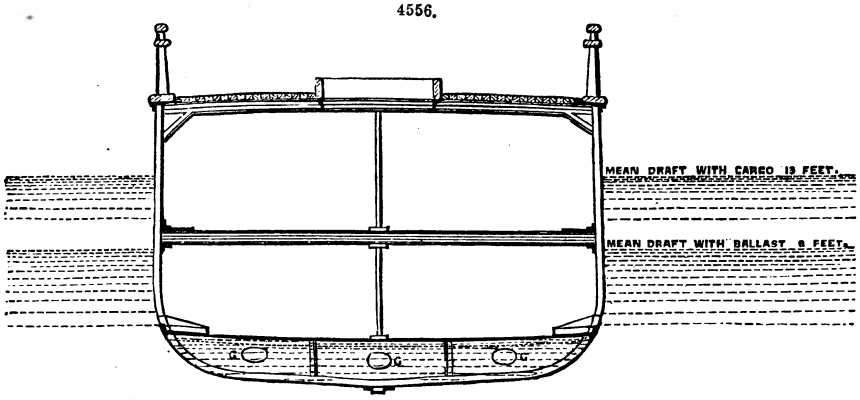

4557.

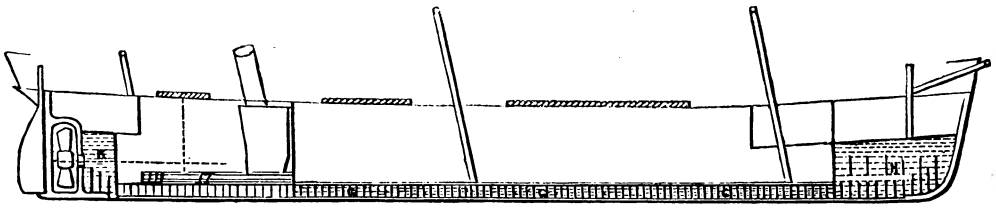

an iron screw collier with water ballast, in which it will be seen that a water-chamber is formed by the hollow space of the double bottom G G, and a chamber is also obtained in each of the extreme fore and aft compartments H and K, Fig. 4557. When the vessel is required to be ballasted, the large sea-cocks are opened and water is admitted into the hollow bottom G and the aft compartment K, so as to fill these two portions; and then the water is also admitted into the fore compartment H, to such an extent as may be found necessary for adjusting the draught of water and the due immersion of the screw. When the vessel has arrived in port, the steam-pumps are set in action for pumping out the ballast water; or in a dry harbour at low water the large sea-cocks are opened, and then the water is easily and quickly got rid of within the short time of the cargo being taken on board; and the vessel is thus got ready for sea again without having experienced any delay on account of discharging ballast. Figs. 4556, 4557, represent the iron screw steamer 'Annie Vernon,' which is of 518 tons gross register, and 70 horse-power. The weight of water ballast contained in the hollow bottom chamber G is 120 tons, in the aft compartment K 20 tons, and in the fore compartment H 30 tons, making a total of 170 tons of water ballast; and the

cargo of coal or iron ore which the vessel carries is about 700 tons. The mean draught when in ballast is 8 ft., and when fully loaded with cargo 13 ft., as shown in the transverse section, Fig. 4556.

There is perhaps no branch of iron shipbuilding in which more special advantages are obtained from the use of iron than in the construction of flat-bottomed boats for river navigation. The extremely small draught of water thereby obtained is a matter of great difficulty except by the use of iron as the material of construction. A specimen of vessels of this class is shown in Figs. 4558 to 4560, which represent an iron paddle steamer, 226 ft. long, 30 ft. beam, and 7 ft. depth of hold,

4558.

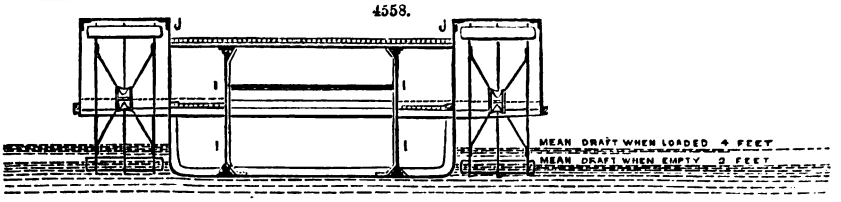

4559.

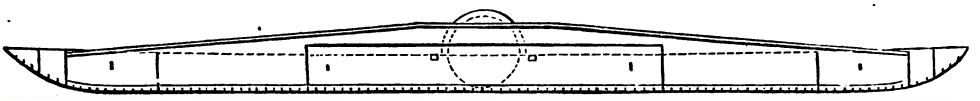

4560.

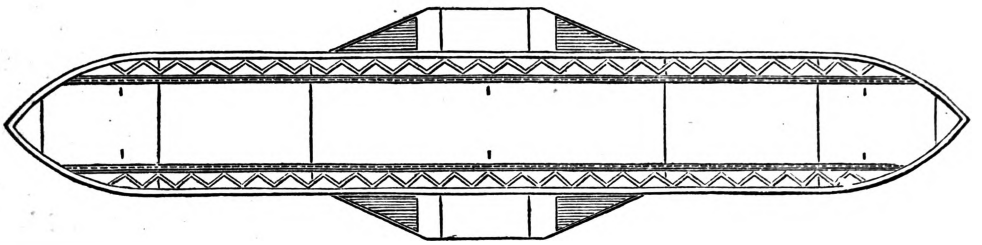

fitted with engines of 170 horse-power. This steamer draws only about 2 ft. of water when light, and can be loaded with coal and cargo to a depth of 4 ft.; it maintains a speed of 14 statute miles an hour when steaming alone, and 11 miles an hour with one barge in tow, 200 ft. long and 30 ft. wide, with 370 tons of cargo on board, having a draught of 4 ft. In this construction of vessel two longitudinal iron girders I I are introduced, rising considerably above the level of the deck, in addition to the sides of the vessel being raised as girders to the height of the paddle-boxes, as at J J, Fig. 4558. The girders I I are required in order to obtain the necessary longitudinal strength as a girder for carrying the weight of the engines and coal, the hull of the vessel being totally insufficient for this on account of its necessary shallowness and lightness. This vessel is made without a keel, Fig. 4558, and with a spoon bow, Fig. 4559, which is found to be a very advantageous form for facilitating getting the vessel off the sandbanks that are so frequently met with in such rivers as the Ganges and Indus where these vessels are worked, in which it is found impossible to avoid at times going aground on the sandbanks.

The mode of riveting adopted in large first-class vessels is principally what is termed chain-riveting, both in the longitudinal and vertical joints; but in addition the principal stringer-plates in the upper part of the vessel, and the sheerstrakes in the midships, have further rows of rivets with increased lap of the joint-plates, making the joints in these cases treble or quadruple riveted.

The joints for the plating have now become more perfect than formerly, by the use of the planing machine. The edges of the plates for the butt-joints are planed perfectly straight and smooth, and they are thus brought into accurate contact with each other, so as to form a true and close joint, which could not previously be attained by shearing and the too common practice of hammering up the edges of the plates. All necessity for undue calking and the use of lining strips is thus avoided, and the best strength of the material is imparted to the ship. The quality of iron employed for shipbuilding should in all cases be equal to a tensile strength of at least 20 tons the square inch, and a direct and habitual system of testing should be constantly carried out.

We are indebted to Thomas Smith, M.I.N.A., of Dublin, for the following practical instructions in iron shipbuilding;—

Keels.—In boring keel-bars, be particular to have the top row of rivet-holes marked no lower down than is necessary to make a good and close fit of the garboard strake at the top row of holes, and on no account weaken the keel-bar by having the lower row of holes bored too low down; at the same time care must be taken to have a distance equal to the diameter of rivets between the lower edge of upper row and upper edge of bottom row; a distance of two diameters between the centre lines of the top and bottom rows, Fig. 4561. In marking off the holes, attention should be paid to having them properly divided; that is to say, having the upper rivet exactly between the two lower rivets. Make the length of scarfs of keel-bars at least ten times the thickness of keel-bar. Lloyd's Rules give only eight times, but this is too little to make a substantial connection.

4561.

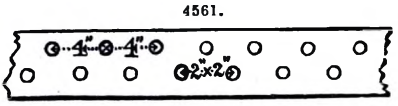

Before commencing to drill the scarfs, have them drawn perfectly close, and see that the ends are brought together, and are a good fit.

It is not necessary to drill more than three holes in scarfs for stitching, and these should be on top part, so as not to weaken the keel-bar more than necessary.

The upper side of scarf should be calked before the frames are laid across keel, and the under side after the keel-plates are riveted.

The butts of the garboard strake must be spaced so as to be well clear of the butts of keel-bar; say at least 30 in. when practicable, and with care this distance can generally be given.

Have the position of all frames marked on the keel with a centre punch before any of the frames are laid across; this will save a deal of unnecessary trouble.

See that the keel-bars are properly shored, straightened on top edge, and got quite fair previous to laying any frames over them. Attention must also be paid to fairing the keel fore and aft by a line, after the frames are up in place, before commencing to fit any of the garboard strake on. In Fig. 4562, *a* is the keel; *b*, cap-piece of oak; *c*, gluts or wedges; *d*, redpine; *e*, redpine; *f*, redpine; *g*, slabs.

It is important to keep the keel a reasonable height from the ground, so as to allow room for the workmen to get under the vessel's bottom without being too much confined; otherwise they cannot make good work of the riveting and calking. In settling this point, bear in mind that if the vessel has a flat floor the blocks must be laid higher.

Let the keel-blocks be spaced about 7 ft. 6 in. apart, and have a double block between, say every second and third block alternately. This will allow for shifting any blocks that may be necessary to get at the work without fear of the vessel settling down. Have the three or four last blocks laid on fore and aft logs, as the vessel will be certain to sink at after end, if anywhere.

Fig. 4562 shows height and dimension for keel-blocks, suitable for vessels of the usual run.

It is well to have the keel riveted as soon as possible, to prevent dirt or any rubbish getting down between the keel and garboard strake.

4562.

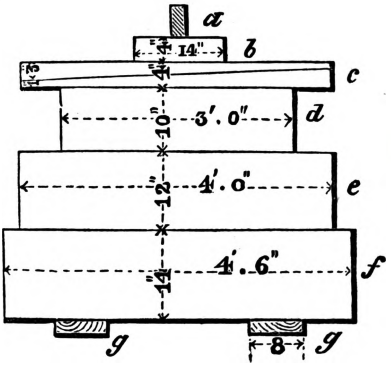

Flat-plate Keels.—If for a vessel building to class at Lloyd's, the breadth and thickness must be as follows;—In vessels of 500 tons and under, 2 ft. wide; from 500 to 1000 tons, 2 ft. 6 in. wide; 1000 tons and upwards, 3 ft. wide. The thickness of plates in all cases to be not less than one and a half times the thickness of the garboard strake.

It is desirable in flat-plate keels that the butts of the garboard strake should be clear of the butts of keel-plates at least two spaces of frames on both the port and starboard sides; and for this reason the keel-plates should be made in such lengths as will suit this; also see that the butts of the keel-plates are fair between two frames, as this is necessary to facilitate the putting on of the butt-straps.

In all cases it is recommended to treble-rivet the butts of keel-plate, making the butt-straps as wide as can be got in between the flange of the frame angle-irons and heel-pieces on next frame.

Stern-posts and Stern-frames.—In a screw steamer, care must be taken in boring any holes about the boss that may be required, and this should be done previous to putting the frame up in place. Mark off the lead of these holes so that they may be bored in the proper direction, and thereby have a proper divide on the inside of the boss.

Particular attention should be paid to taking out any twist that may be in the stern-frame when it comes from the forge, and be careful to see that the bosses on both outer and inner post lead fair fore and aft.

In the upper portion of stern-posts it is only necessary to have one row of rivets for the rudder-trunk. Some builders and inspectors prefer to put two rows, but it is only waste of time doing so.

In the riveting of bosses, it is absolutely necessary to have the countersink bored out a sufficient depth, so that when the engineers have done boring and fitting in the stern-tube, there will be plenty of countersink left to hold the rivets secure.

In putting in the boss-rivets it is a good plan to cool them at the points, so that the heads may thereby be well tightened up.

Bear in mind that it will save trouble, and make better workmanship, if you arrange the plating so that a strake will cover the boss.

Make the scarf of your stern-post always on the port side, and do not have the length of the knee or keel portion to exceed 10 ft. 6 in., as that length is about as great as can be conveniently taken on ordinary trucks, if the post has to come by railway from the forge.

Stems.—The mould for bending the stem too should be made off the inside line of stem, and if it is not turned before the scarfs of keel-bars are cut and finished, it is well to measure the total length of the keel on the blocks, and contract or increase the length of the stem-bar, as the case may require, to make up the exact length. Do not drill any holes in stem until it is turned to shape, and be careful to have the scarf on the right side to agree with forward length of keel-bar.

In forging stem-bars, have the fore side shaped to a flat half-round, and see that there is no twist in the bar.

Rudder-frames.—Should you make the rudder forging in scantling, according to Lloyd's, bear in mind that if for a spar-deck ship, or vessel with full poop and forecastle, the diameter of the rudder-head must be in accordance with the dimension given for the gross tonnage, and not the tonnage under main deck.

Attention should be paid to having the rudder-pintles all in a fair line. Have a steel washer for the pintle at heel of rudder to work on. It is always the best plan to make the rudder to unship, and the space for unshipping at each pintle should be about 1 in. deeper than the length of the pintle.

In a screw vessel attention should be paid to keeping the pintles clear of the bracket on the after-post for outside shaft bearing.

In rudder forging for vessels of from 200 to 500 tons, have a stay across centre of rudder from rudder-post to bow; and in vessels over that tonnage, two stays; width of stays about 3½ in. The stays may either be made with the forging or of cast iron fitted in. The space between the plates of rudder should be filled in with either wood or Portland cement. Thickness of rudder-plates need in no case exceed ¼ in.; and it makes the most substantial work to have the rudder-plates snap-riveted.

Rudder-bands.—Pay particular attention to see that the centre of pintles are correctly set off before boring same, by striking a line up centres, to see if these are in a line, and that the back is straight and fair; this applies also to the stern-post. See that the rudder-trunk is made of sufficient size to allow the rudder-stock to be got up easily, say from 8 to 9 in. internal diameter for a 4 to 5 in. rudder-post; other diameters to be in like proportion. Attention should be paid to having the rudder-trunk and angle-iron binding the foot of trunk to outside plating a good fit, and the bottom carefully calked.

Rudder-stops.—The proper angle for a rudder to travel is 42 degrees on each side of centre line of ship, and the stoppers should be made to suit this. Be particular to have the stops made strong enough and well secured to stern-post. The rudder working easily is a matter of great importance, and requires particular attention in the lining-off and putting in place.

Angle-iron Frames.—Previous to putting any work on the bars, have them examined to see that there are no cracks or blemishes, as angle-bars are constantly sent from the iron-works without care being taken to see if they are sound.

In punching the frames, see that the holes are properly divided; and as an example, for double-riveted laps with ¾-in. rivets, have the top hole 4½ in. from upper edge of lap, or 6½ in. from centre of lap, and the lower hole 3¾ in. from lower edge of lap, or 6 in from centre of lap, on plate mark on the mould on board. Fig. 4563 shows the proper spacing of rivets for double-riveted laps with ¾-in. rivets. *a*, is the frame; *b*, rivets to be as close to frame as head of rivet will permit; *c c c*, chain-riveting at butts to have the holes punched opposite each other; *d d*, butt-straps to be fitted as close as possible between laps of outside strakes.

In single laps have a hole punched 5½ in. each side of centre of lap, the lap being 2¾ in. Divide the spacing of holes for rivets between one lap of plates and the next, as near to eight times the diameter of the rivet as you possibly can arrange.

4563.

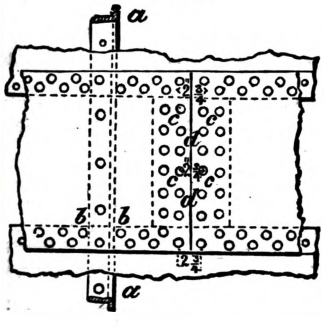

4564.

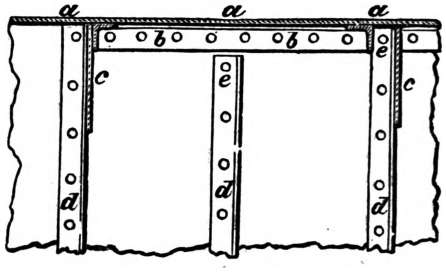

In frames that run up to form sides of poop, forecastle, or bridge, have those with no beam on, cut off low enough to allow the lug-pieces for securing stringer-plate to shell to run from beam to beam, as Fig. 4564, where *a a a* is the poop-deck stringer-plate; *b b*, lug; *c c*, beam-knees; *d d d*, frames; *e e*, this hole to be made after the plating is on. A hole should be punched in head of the frames that are cut short for lug-pieces passing, about 3 in. down; but it is best not to put this in until the vessel is framed and faired.

In frames that step on the knee of stern-post or stem, do not neglect to have them cut to the proper thickness to allow the plating to come on.

The heel of frames bearing on keel should be carefully cut and finished, so as to butt close together, and the bearance not to be greater in width than the thickness of keel, otherwise a proper job will not be made of the garboard strake.

The inside flange of angle-iron frame should be punched so as to suit size of the reverse frame, and care should be taken to see that the holes are so punched as to take the centre of flange of reverse frame.

It is necessary to see that the heel-pieces are quite fair with under side of frames, and that they bear true on the keel. One or two holes only should be punched in the frames, for the beam-knee, prior to putting up the frames.

Length of beam-knee is measured square off, and the holes should be divided round the sweep, the centre of lower hole placed about 2 in. from lower edge of knee, Fig. 4565, in which *a* is the reverse iron; *b*, hole punched to take reverse bar on beam; *c d*, measurement at right angles to top of beam—not obliquely. Do not have the upper hole in head of frame for upper

rivet in beam-knee punched until the frames of vessels are all faired and sheered, as in case the beam requires to be lifted or lowered, it spoils the hole, and as this rivet passes through the angle-iron on beam it is necessary the hole should be true to make good work. The same rule applies to the bottom hole in beam-knee, as it looks very unworkmanlike to see a blind hole there.

4565.

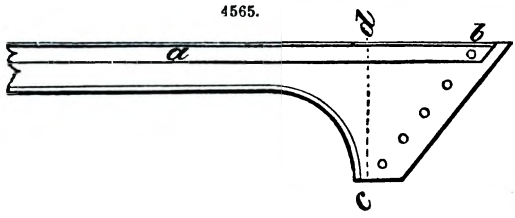

The double frames at the bulkheads should be punched for rivets 4 in. centre to centre, and should be chipped at both edges previous to hoisting up in place, otherwise difficulty will be found in making a tight job of the calking.

If the vessel has a sheerstrake with jump joints, see that the holes punched in frames are clear of the lap of both the inside and outside sheerstrake.

Reverse Frames.—The frames with no beams on to have the reverse bars running up to main-deck height, and these to butt in centre of floor, having heel-pieces of angle-iron on opposite side of floor-top, of sufficient size to form top flange for keelson fastenings.

Short reverse frames to run up to upper turn of bilge; but if there is a spirketting plate on 'tween-deck stringer, then the short reverse frames should run up to top of said plate.

Butts of the short reverse frames should be about 4 ft. each side of centre-line, alternately on the starboard and port side; but should these butts come in the way of boiler or other keelsons, the distance must be altered to suit.

Holes should not be punched in reverse frames in way of floor-ends, unless there is a clear space of $\frac{3}{4}$ of an inch from outside of rivet-hole to lower edge of reverse frame, as in Fig. 4566, where *a* is the reverse bar; *b*, floor; *c*, frame; at *d* rivet this flush, and let reverse bar lie over it

4566.

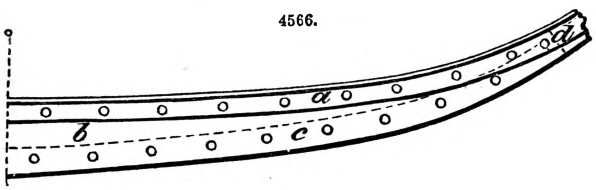

The reverse frames across the floor-tops at ends of vessel will require to be bevelled to suit the rise of floors and make a fair seat for the centre keelson. These bevels can best be taken when the vessel is ribanded and shored up.

See that the butts of the reverse frames are quite close and fair to each other. Accuracy of the workmanship adds greatly to the strength in all parts of an iron vessel.

The reverse frames must fit well over the floor-ends, and see that the floor-ends are thinned down to suit this.

The double reverse frame on floor-top should be neatly fitted on. Get a straight-edge, to see that it is fair, and attend to having all the scarfing or lug-pieces riveted close to floor-plates.

Angle-irons on Beams.—The holes must be punched to suit width of deck-planks; the centre should be marked on the beam, and have two template battens made for marking the holes for punching in the angle-irons, so that they are equally spaced and divided. The holes for the fore-and-aft tie-plates and stringer-plates should also be set off on these battens and the holes marked and punched accordingly. Holes for tie-plates and stringer must be punched to suit the diameter of rivets intended to be used, and those for the deck-plank to suit size of deck screws or bolts.

Holes should not be punched nearer to beam-ends on top flange of angle-iron on beam than about 6 or 7 in., in case they should not come fair with the stringer angle-iron holes. These holes are best drilled through top flange of beam angle-iron, after the stringer is put on, the holes being previously punched in the stringer-plate.

One angle-iron only on beam to run out to beam-end, and to take a rivet through angle-iron on beam-knee and frame, Fig. 4567. *a* is the reverse bar on beam; *b b*, frame; *c*, beam; *d d d*, rivets for stringer-plate, 6 in. or 7 in. apart; *e e e*, ditto for deck-plank twice the width of plank; *f*, stringer-plate.

4567.

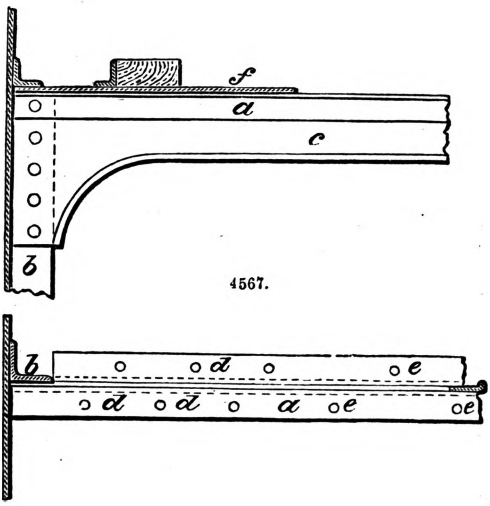

The holes for riveting stringer-plate to angle-iron on beams should be about eight times the diameter of the rivets apart

See that the angle-irons on beams are properly levelled at each end, so as to give a true seat on which to rivet the stringer-plates.

Floor-plates.—Floors should be twice the height above keel at floor-ends that they are at centre-line, and should be parallel to base-line athwartships, as far as practicable. Floor-plates at ends to be the width of inside flange of angle-iron frames.

See that the floor-ends are neatly thinned down, so that the reverse frames fit over fair and close.

Floor-plates should be sheered ½ in. less than the shape of frames.

The floor-ends where they have been thinned down for reverse frames should be chipped flush with the frame, both inside and out, previous to keelson or shell plating going on.

Limber-holes should be cut so as to clear frames, heel-pieces, lug-pieces for keelsons, intercostals, and so on.

At the extreme ends of vessel, the floor-plates should be increased in depth to say twice the depth of floors amidships, or until they measure say 2 ft. across the top, from outside to outside of frame.

Floor-plate for the transom-frame should be put on the depth of the knuckle, so that the stern timbers are sufficiently secured.

Main-deck Stringer.—In the case of an inside sheerstrake going up only to under side of main-deck stringer-plate, the holes in said stringer for the angle-iron bar will require punching the thickness of the inside sheerstrake nearer the outer edge of stringer-plate, so as to catch the centre of the bar, Fig. 4568. *a*, reverse bar; *b*, beam; *c*, inside sheerstrake; *d*, outside sheerstrake.

Should the inside sheerstrake not run up above the main-deck stringer-plate, see that the stringer projects over the frames the full thickness of the inside sheerstrake.

Attention should be paid to punching the holes in stringer-plate for the angle-iron bar, to see that they are not punched with the same die as is used for the outside plating, no more countersink being required than is sufficient to keep the punch from choking, and the stringer-plates should be well sheered to form of side of vessel, or a bad bearing will be left for the gunwale angle-iron bars.

It is advisable to have the stringer-plates riveted to the beams, also the butt-straps riveted as soon as possible, and see that the butts come well clear of butts of sheerstrake.

Previous to commencing with main-deck stringer, see that the heads of frames and reverse frames are not higher than the beams.

Have all holes for the diagonal tie-plates in main-deck stringer-plates punched before putting in place. It is well in all cases to have the butts of main-deck stringers treble-chain riveted.

4568.

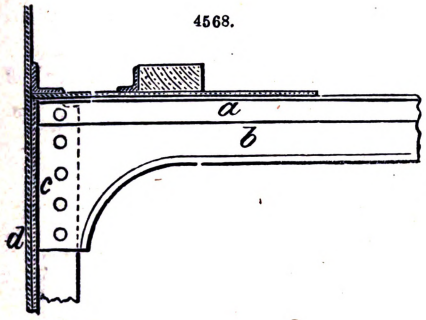

4569.

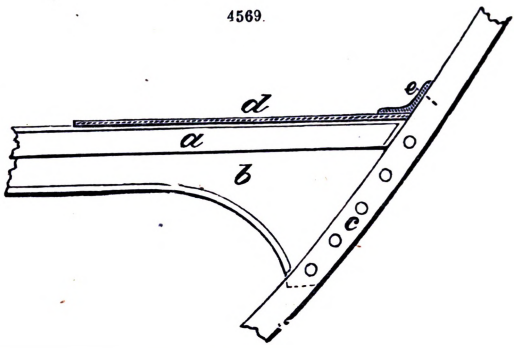

Tween-deck Stringer.—Have all beams in and riveted before commencing to put in 'tween-deck stringers.

In vessels where the alternate reverse frames do not run up to height of hold-beams, see that holes are not punched in the vertical flange of stringer angle-iron, unless it is intended to rivet a lug-piece on the frame, for fastening the stringer angle-iron to the frames with no reverse bar running to that height.

In the after-peake, where there is a considerable flare in the sides of vessel, it is advisable to use a bar of larger dimensions for the stringer angle-iron, so as to get a good hole in the bar, not too near the edge, and thereby weaken it considerably. In Fig. 4569, *a* is reverse bar; *b*, beam; *c*, frame; *d*, stringer-plate; *e*, rivet must not be too near edge of angle-iron, nor too far down in its bosom.

Poop-deck Stringer.—In putting on poop and forecastle deck stringers, have the stringer-plate sheered to come out to the outside edge of frames; so that when the forecastle or poop plating goes on it will butt up against it.

Holes should be punched in edge of centre stringer-plate aft for fastening plate, for taking rudder-trunk, and fixing stuffing box round rudder-head to.

4570.

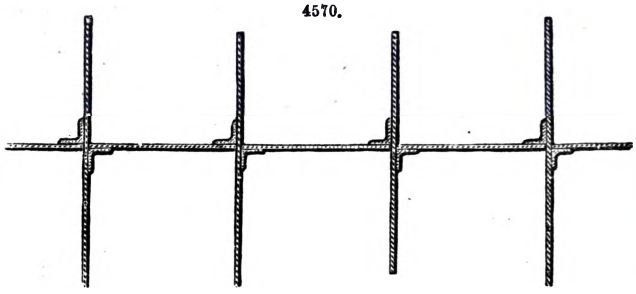

Wash-plates. — Do not put wash-plates between bulkheads and floor-plate on adjoining frames, so as to allow the water to get freely to the pumps.

Fitting-in wash-plates between floors may be done as shown in Fig. 4570; but if they are required to serve as intercostal keelsons, four angle-irons at each floor will be necessary, and they must be made to fit close on.

Bilge-keelsons, &c.—In putting on the lug-pieces for keelsons, see that they are quite fair with the edge of inside flange of angle-iron frame, and the fore-and-aft flange of reverse frame.

The lug-pieces should fit close against the frame angle-iron, and be well riveted thereto.

In keelsons formed of two angle-irons with a bulb-iron between, allow between the angle-irons a $\frac{1}{4}$ in. extra, beyond the thickness of the bulb-iron, in marking off the holes for rivets in reverse frames and lug-pieces so far as the bulb-iron extends.

The lug-pieces for three frames forward and aft of the finish of bulb-iron between angles should not be punched, but drilled to suit a tapered slip neatly fitted between the two keelson angle-bars.

The butts of angle-iron bars of keelsons should be so shifted as to be at least two spaces of frames clear of butts of other keelsons, and as far as practicable clear of butts of outside plating.

If the angle-irons for keelsons are 4 in. or more, the holes for rivets should be punched each side of the centre-line, Fig 4571. *a*, in some cases, 5″.

Athwartship flanges of bilge-keelson angle-irons in way of breasthooks should not be riveted till the breasthook-plate is in.

See that the breasthooks are got in as soon as possible, and that they are well fitted and securely riveted in place. A man-hole should be cut in breasthooks where necessary.

Should the breasthooks or pointers aft in a screw vessel not be high enough above the stern-tube, they should not be riveted until the boss for shaft is bored and finished, on account of leaving room for men fastening bolts, and so on.

Have the position of bilge-keelsons carefully marked off on frames, and see that they are sheered fair.

It is advisable to keep the bilge-keelsons clear of ribbons as far as possible, in case the lug-pieces or reverse frames want any setting up.

When practicable, have the height of lower bilge-keelsons at aft-peake bulkhead made to correspond with the height of top plate of centre keelson, so as to get a breasthook-plate riveted between the bilge-keelson angle-irons and top of centre keelson, Fig. 4572, where *a a* show bilge-keelsons; *b*, breasthook; *c*, centre keelson; *d*, frame; *e*, floor; *f*, garboard strake; *g*, keel. This makes a good finish and a very secure fastening.

4571.

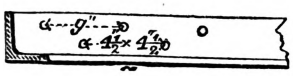

4573.

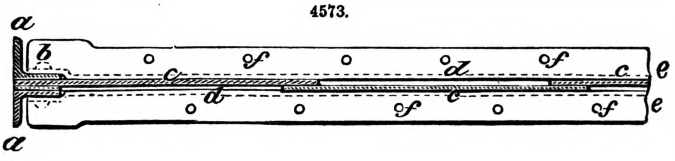

4572.

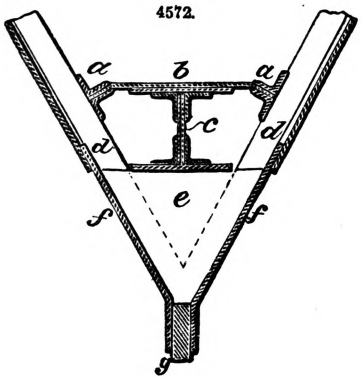

4574.

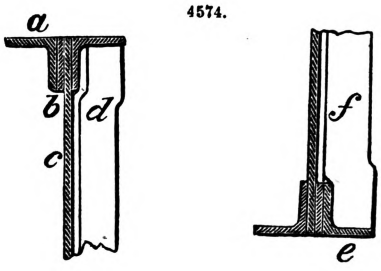

Bulkheads.—See that the bulkhead-frames are all chipped fair on edges, prior to putting up in place, so that the bulkhead plates can be properly calked under the shelf-plates, stringers, and so on.

The bulkhead-plates should be calked outside between the frames, as well as both sides inside, and round the edges of the gravit-plates, for keelsons passing through, see that the gravit-plates are a good fit and neatly put on. The plates for gravits should be $\frac{1}{8}$ in. thicker than the bulkhead-plates.

The beam angle-bars should be cut short on bulkheads, so that they lie in the bosom of the bar, Fig. 4573, and the angle-irons forming the beam on bulkhead should be not less than 3 in. deep, so that a good rivet may be got in through the head of the vertical angle-iron bar. *a*, Fig. 4573, is the side frame; *b*, holes to be left blind, and riveted after the rest of bulkhead; *c c*, bulkhead-plates; *d d*, slip to be set to curve of beam, and to equal angle-iron in depth; *e e*, the vertical flanges of these bars not to be less than 3 ft. to get a good rivet in head of vertical bar; *f f f*, holes to suit deck-planks. The vertical bars should have a hole for a rivet punched through both side frames and should be neatly joggled for it at foot. The same applies to both the reverse angle-irons on the top edge, Fig. 4574. *a*, beam's reverse bar; *b*, slip; *c*, bulkhead-plate; *d*, vertical bar, to be properly joggled over; *e*, side frames; *f*, vertical bar.

In plating bulkheads, attention should be paid to see that the first plate is at right angles with the keel; also see that the reverse angles forming the beam are not sagged down in centre or standing too high at centre or ends.

The fore and after peake bulkheads should be plated in the vessel, after the frames are faired, not from the mould, or board, in case the frames may not be the proper fit at the bottom. This applies more especially to vessels with flat-plate keels.

Attention should be paid to the fitting and punching of the gravit-plates, to see that the holes are sufficiently close and regular, and that the plates are not made larger than necessary; as, if so, they cannot be calked tight. It is also advisable to have a rivet as close as practicable to the hole for keelson-bars passing through the bulkhead, Fig. 4575. *a* in this figure indicates the position of boiler-keelsons in engine-room.

4575.

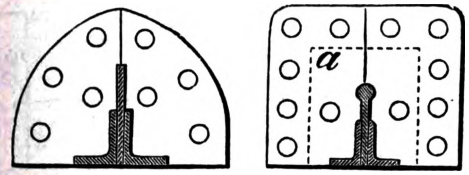

4576.

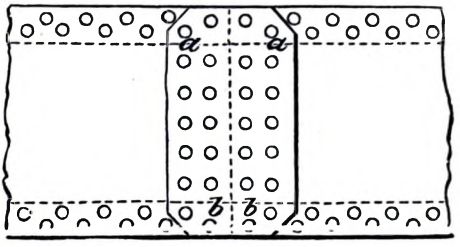

Inside Sheerstrakes.—The butts of inside sheerstrake should be double-riveted through inside sheerstrake and butt-strap; the row of rivets next butt of plate to be riveted flush before the outside sheerstrake is put on, Fig. 4576. *a a*, these two rows, through inside and outside sheerstrakes and butt-strap, and so on; *b b*, these two rows through inside sheerstrake, and butt-straps, and riveted flush, before outside plate is put on.

If there is only one frame between the butts of outside and inside sheerstrake, see that the plates are butted fair in the centre, between frames. Same rule applies to the outside sheerstrake, so that there is a full frame space of shift between the butts of outside and inside sheerstrakes.

The holes for rivets in the gunwale angle-iron bars should not be punched with the same die as used for outside plating, on account of giving too much countersink.

In inside or ordinary sheerstrakes attention should be paid to seeing that the holes for the vertical flange of gunwale angle-irons are punched the proper height, so that the holes may be fair in the centre of bar.

Outside Sheerstrakes.—In outside sheerstrakes, make sure that the gunwale angle-iron bars on the top edge of sheerstrake are properly faired all fore and aft, as also the top edge of the sheerstrake itself. If possible, it is well that the gunwale angle-bar should be not less than 4 in. by 4 in., as this width will give a better chance of making all fair holes.

Beams.—The beam-mould should be made the full breadth of the vessel, so that the total length of beam can be taken off and the correct bevel taken at both sides. The mould should be made the full depth of the beam-knees.

Have the bottom hole for rivet in the beam-knee punched, so as to allow 1½ in. of iron from the under side of rivet to bottom of knee.

Poop-beams.—Have the poop-beams put up and bolted to the frames, but do not have them riveted until after the stringer-plates and tie-plates are all faired and riveted. This should be specially attended to, as it frequently occurs that if the beams are riveted first the knees get twisted, and set the beams up or down, as the case may be, making bad and unfair work of the stringer and tie plates.

To keep the poop-beams the proper spacing, it is a good plan to have a long plank, say in scantling, about 8 in. by 3 in. or 2½ in., and have marked off on this plank the spacing of the beams, cutting out a notch for each beam; and when the beams are put up, let them go into the notches, and have the plank shored up from main deck. By attending to this, you will have all your beams equal distant and to one curve, which will add considerably to the appearance of the cabin ceiling, and so on.

Framing of Hatches, &c.—In making hatches, put in the fore and aft angle-iron bars first; have them made a good and neat fit; see that they are straight fore and aft, and then put in the bulb-iron or plate for fore-and-aft carlings; seeing this is also a good fit.

An angle-iron bar, about 5 in. by 5 in. by ½ in., cut in lengths to suit, and fitted in the corners of the hatches, makes a much better finish than to knee the bulb-iron or bend the plate-knee.

The beams that form the fore-and-aft ends of hatchways should have reverse angle-irons, not less than 3 in. deep, so that the holes in plate-knees may be punched to allow ¾ of an inch of iron from top of rivet-hole to top of knee-plate, Fig. 4577. In the figure, *a* is the beam; *b*, reverse bar on beam; *c*, fore and after; *d*, plate-knee, in corner of hatch, inside; *e*, this rivet to be not less than ¾ from edge.

4577.

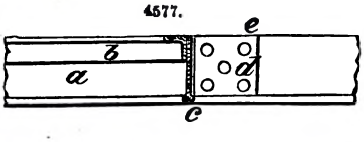

Outside Plating.—Attention should be paid to having the butts of the garboard strake clear of the scarfs in keel, and that the butts of the garboard plates should have three frames between them from the starboard to the port side throughout, Fig. 4578. *a a*, the butts of these go a frame farther forward on starboard side (see *f f*); *b b*, the butts of these do the same (see *e e e*); *c c*, butts (see *f f*); *d d*, garboard-strake butts (see *e e e*).

In order to have the butts of the outside plating a clear two spaces from the bulkheads, have the plates that come in wake of bulkheads a space of frames more in length than the average length of plating.

Have the sides of plates, with the maker's stamp on, put to the outside of ship, so that the surveyor may see it, on account of the classification.

In the butts of bilge strakes, if the bilge is at all quick, the edges of the plates should be sheered with a slight curve.

In plating vessels, attention should be paid not to put too much weight of plating on the top sides until the garboard bilge and bottom is all plated and riveted.

The holes for rivets in the lower edge of double riveting should be punched as near as possible to the edge of frame, Fig. 4579, and spaced, say, for a 3-in. flange and $\frac{3}{4}$-in. rivets, not more than 8 in. pitch. *a a* are the frames; *b b*, rivets next frames to be as shown.

4578.

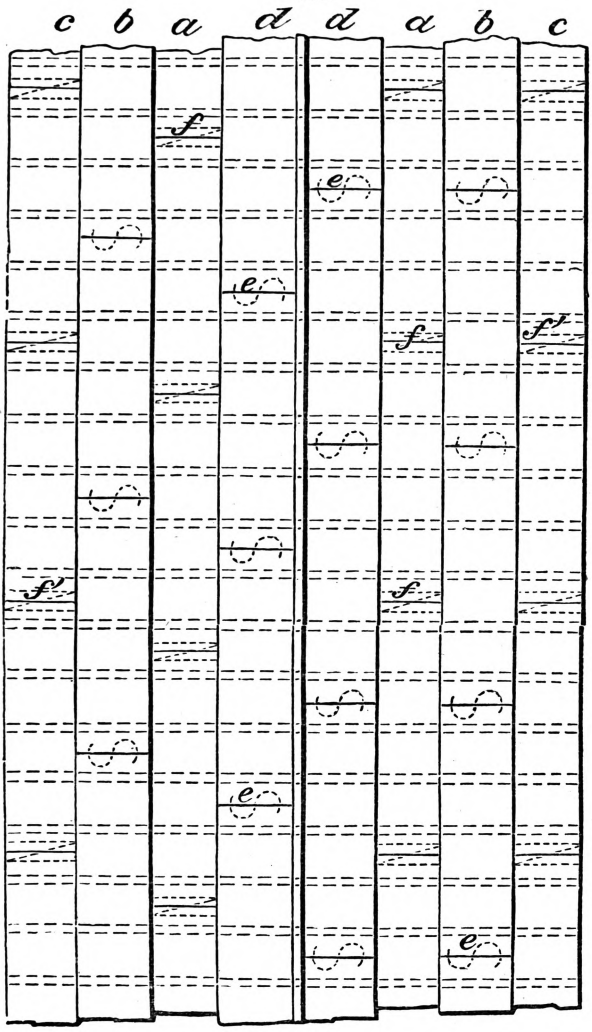

4579.

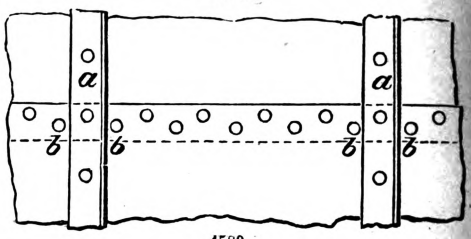

4580.

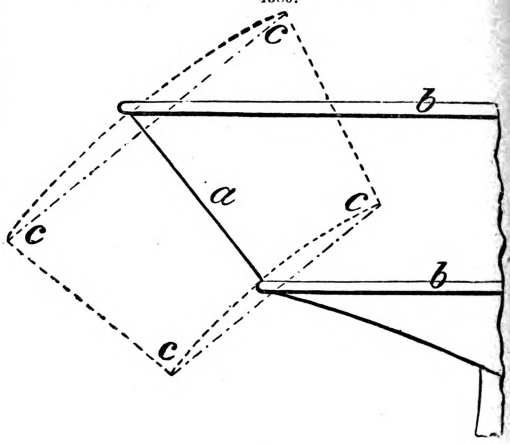

4581.

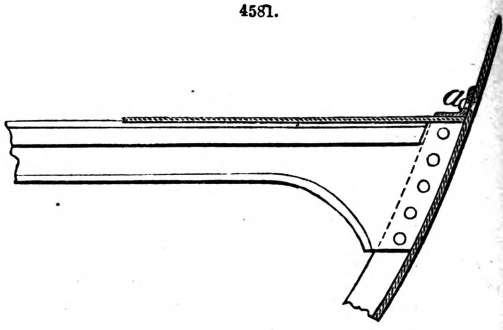

Have the inside strakes stitched at the butt-straps and frames, say about six rivets in each butt-strap and two in each frame, before putting on the outside strakes.

The filling-plates at the bulkheads at back of shell-plates should be at least the width of the fore-and-aft flange of the frame angle-iron longer than two spaces of frames, in the fore-and-aft peake bulkheads the filling-plates will be about 3 in. longer on account of the set and bend.

In the plating round the knuckle of stern, see that the plates are kept up to the sheer-marks, and on no account have them below, and allow a clear $1\frac{1}{4}$ in. from top of rivet-hole to the edge of plate.

In taking off the dimensions to order plates for going round the stern, supposing them to be of average size, an allowance of about 5 in. should be made beyond what the plate measures in the depth of the stern. In Fig. 4580, *a* is the centre of plate; *b b*, mouldings; *c c c*, development of plate, showing allowance.

In marking the rivet-holes for sheerstrakes aft, attention should be paid to having the holes for connecting the stringer-plate to the shell of the vessel high enough up for the rivet-hole to come in the centre of the flange of the angle-iron, Fig. 4581. *a*, see that this rivet is not too low in bosom of angle-iron.

In the plating of topgallant forecastles, the plate that is cut for the knightheads should project, say, about 3 in. beyond the knighthead bulkhead, and the rivets through the bulkhead should be flush on the forward side. The projection is to allow for bolting on the knee-brackets, and so on.

Fig. 4582 is a sketch showing a good arrangement of rivets in frames, heel-pieces, and butt-straps of garboard strake.

4582.

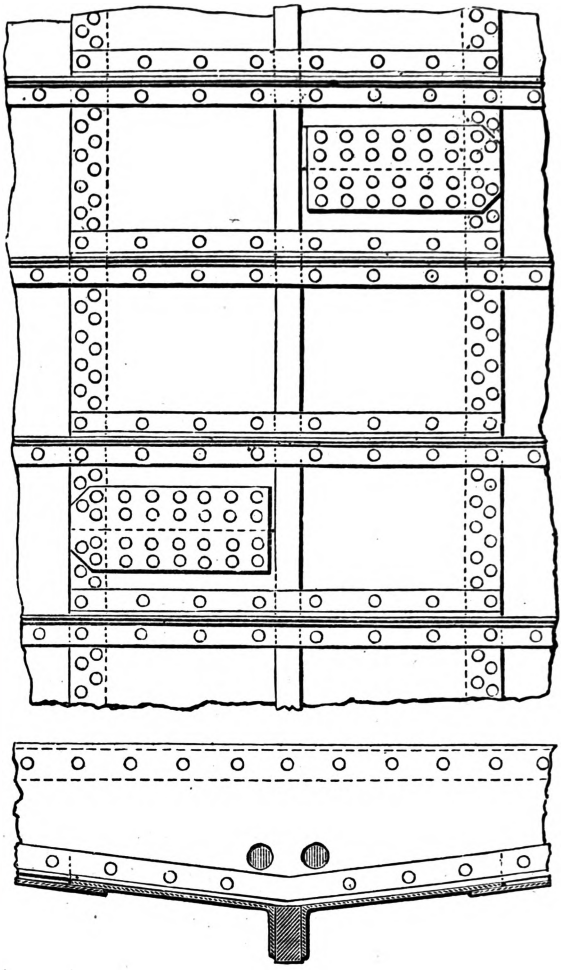

Books upon Iron Shipbuilding:—Taylerson (R.) 'On Building Iron Ships,' 8vo, 1854. Russell (J. Scott), 'The Modern System of Naval Architecture,' 3 vols., folio, 1865. Fairbairn (W.), 'Treatise on Iron Shipbuilding,' 8vo, 1865. Freminville (A.), 'Traité Pratique de Construction Navale,' royal 8vo, and plates in folio, Paris, 1865. Rankine (Professor), 'Shipbuilding—Theoretical and Practical,' folio, 1866. Lissignol (E.), 'Navires en Fer à Voiles,' royal 8vo, Paris, 1866. Grantham (J.), 'Iron Shipbuilding, with Practical Illustrations,' 12mo, with plates in 4to, 1868. Reed (E. J.), 'Shipbuilding in Iron and Steel,' 8vo, 1869. Smith (T.), 'Handbook of Iron Shipbuilding,' 12mo, 1869. 'Transactions of the Institution of Naval Architects,' edited by E. J. Reed, 4to, 1860 to 1872. 'Lloyd's Rules for Building Ships,' 4to, 1872.

IRRIGATION. Fr., *Irrigation;* Ger., *Berieselung-Bewässerung;* Ital., *Irrigazione;* Span. *Riego.*

Irrigation is either natural or artificial. The former depends upon rain, upon wells, and upon the flooding of rivers. The latter is conducted by means of canals and tanks.

Canals are divided into two great classes, those of irrigation and navigation. The conditions required to develop one of the former class successfully are, that it should be carried at as high a level as possible, so as to have sufficient fall to irrigate the land for a considerable distance on both sides of it; and that it should be a running stream so as to be fed by continuous supplies of water from the parent river, to compensate for that consumed in irrigating the lands.

The conditions of the latter are, on the contrary, that it should be a still-water canal, so that navigation may be equally easy in both directions; and as no water is consumed except by evaporation or absorption, and at points of transfer from a higher to a lower level, the required quantity of fresh supply is comparatively small, and it is thus most economically constructed at a low level. An irrigation canal, however, may and should be laid out so as to serve for navigation as well; the velocity of the stream being made as gentle as is consistent with its primary uses, so as to afford facilities for boats ascending against it as easily as possible.

There may be said to be two distinct systems of canal irrigation pursued at present in the north and south of India, which may be called the Bengal and Madras systems, respectively. The difference between the two arises from the physical peculiarities of each country.

The Madras system has been confined to the Deltas of the great rivers, such as the Godavery and Kistnah, and consists in throwing a dam across the bed of the river to raise the surface level of the water, which is then conducted along canals, whose mouths are in rear of the dam, to the lands requiring it. This system is not applicable to lands at a high level above the surface of the river, as it would be impossible to raise the water sufficiently to overflow them. It is therefore confined to alluvial tracts, which have been formed by deposits from rivers in a state of flood.

Nearly all great rivers are thus charged with silt during the rains. In the upper part of their course, where the natural fall of the country is great, and the velocity of the stream high, this silt is carried forward by the water holding it in suspense, and the action of the stream is generally erosive, and tends to lower the bed; but as the river reaches the plains below, the velocity gradually diminishes, and at last falls below that necessary to carry on the silt, which thus becomes deposited. The effect of this is to raise their beds and cause them to be constantly shifting their course, and also to raise the ground on both sides of their banks often for a considerable width by successive deposits of silt when they overflow their banks. Thus, such rivers will

not run in the lowest lines of the valleys, as in ordinary cases, but there will often be a considerable fall from their banks outwards. It is evident this gives great facilities for such irrigation works as are above described.

But in the rivers of Northern India, although there is a certain width of land on each side which has been formed as above, yet it is, in general, a very narrow strip. The greater portion consists of a high table land occupying nearly the whole extent of the country between the two rivers, and, in general, rising very abruptly from the land on each side. It is impossible to irrigate this high land by a short cut from the river; the depth of digging would be too great, and the water would never stand at a sufficiently high level to be brought on to the land except by expensive apparatus for raising it. It is necessary to go back to a point high up in the river's course, whence the water can be brought on to the high land by excavation of a moderate depth, and by which sufficient command of level may be obtained to overflow the surface.

The simplest kinds of canals used in India are known as inundation canals. Cuts are made from the river inland, for a certain distance, and are then carried in a direction generally parallel to the fall of the country, or the course of the river. By these, when the latter is in flood, the autumn crop is watered. But in the cold season, when the water is low, the levels do not admit of the land being irrigated, and the spring crop thus derives no benefit from these canals, which have then run dry as the river is low. During that time of year labourers are employed to clear the canal beds of the silt which was left by the waters in the summer; in India often as much as 6 ft. in depth will accumulate at the mouth in one season. The irrigation is usually carried on by means of branch canals leading from the main one, whence the water is carried by minor channels on to the fields. But sometimes, when the levels do not admit of surface irrigation, the water is raised from the canal itself by the Persian wheel, or a temporary dam is placed across the channel to raise the level.

The weirs in use for canals in the river Ebro are usually from 6 to 9 ft. high, and are very primitively constructed, being formed of rough blocks of stone thrown loosely together. Often as much as 50 per cent. of all the water coming down the river filters through them, and the expense of keeping them in order is very great, for in times of flood they always get damaged. In the small Spanish rivers the weirs are of small height; they are formed by driving two rows of piles or strong stakes from 3 to 4 ft. apart, and filling the space between them with sods, brushwood, and stones from the bed of the river; and, despite their temporary nature, they resist with great tenacity the floods which come down with considerable velocity in these rapid streams.

On the river Ganges weirs of a simple character are adopted which answer their purpose well. The work is carried on by means of a barge attached to a strong hawser, stretched across the river, and firmly fixed at both ends. On this barge a derrick and windlass is fitted up, and by these the materials are lowered into position. Triangular frames formed of poles about 18 ft. long, firmly spiked together, are placed vertically, with the apex down-stream, about 15 ft. apart. The poles lying on the bed of the river are crossed by rough poles and boulder-stones thrown upon them; by these they are kept in place. Again poles are spiked across the upper part of the frames, and the whole filled with boulders. The water is thus dammed back, though a great deal escapes, and the difference of level between the water on the upper and the lower sides of the weir is about 3 ft.; the depth of water being about 12 ft. above the weir, and 9 ft. below it. At a short distance lower down a similar weir is erected.

There are no works at the head to control the supply of water, for the course of the river is so uncertain, that it may completely desert the head, and the water may have to be brought in by a new mouth excavated for that season, which, again, may be useless in the next, or the bank of the river may be cut away to such an extent as to involve the head works in its fall. Under any circumstance, there is always a considerable deposit of silt at the head, which would naturally be increased by anything in the shape of a dam.

The silt excavated from the bed during the cold season is usually heaped up close to the edge in rough spoil banks, and is constantly falling in, while the tortuous course of the channel also causes large deposits of silt at the bends. The accumulation is still further increased by the water having no exit at the tail of the canal, which usually terminates in a series of small channels in the middle of the district. The labour of clearance thus becomes a heavy annual charge or drawback on the benefits received from the water, and the numerous deserted channels in various parts of the country show that without such labour these canals would soon silt up and become useless.

Canals of Permanent Supply.—The source is generally a river carrying a perennial stream, and the head of the canal must be located high up on the river's course, so as to obtain plenty of command of level, and get on to the high ground without much heavy digging; generally for this purpose it is necessary to go either to the spot at which the river finally leaves the hills, or to a point not far below that spot. At this point the water, except in freshets, is pure and free from silt, the great enemy of canals, and the course of the river is restricted within narrow limits, so that by dams thrown across the river bed, the water can be easily diverted into the new channel.

The quantity of water required is determined partly by the area of land to be irrigated, and partly by the quantity of water that can be obtained from the river when at its lowest.

It is evident that the effective work of a cubic foot of water discharged from the canal, for irrigating the land, must depend upon variable data, such as the nature of the soil, and the crop, the distance the water has to be carried on to the land from the main channel, the humidity of the atmosphere, &c.

The average assumed for drawing out the projects for the Baree Doab and Ganges canals, derived from data afforded by the Jumna canals, was, that each cubic foot a second of discharge was capable of actually irrigating 218 acres; and reckoning that for each acre actually watered there would be two other acres either lying fallow or being watered from wells or rain, then each cubic foot would represent 654 acres (say one square mile) of culturable land more or less dependent

on the canal. In the Soane Canal project (1861) Colonel Dickens reckoned three-fourths of a cubic foot of water a second for every square mile of gross area.

If the canal is to be a navigable one, a certain minimum depth must be assumed everywhere, so that the amount of water required for that minimum must be allowed over and above the quantity to be expended on irrigation.

A large area of the land through which the canal takes its course may be unfit for cultivation. The soil may be bad or swampy, or it may be reserved for forest or grass preserves, or occupied by towns or cantonments. All this has to be taken into consideration in fixing the area actually available for irrigation, whence the amount of water required must be determined.

The proportion of depth to width on the Western Jumna Canal, being that which the stream has in course of years formed for itself, was found by a series of trials to be about 1 in 13. On the Baree Doab Canal, the proportion fixed in construction was 1 in 15; for the Sutlej Canal, 1 in 14. It is evident, if the canal is to be navigable, that the minimum of width must always be sufficient to allow of two boats passing each other, while a minimum of depth, usually 2½ ft., must also be allowed to float the boats.

The side slopes of the canal channel will be arranged generally according to facilities for excavation, for unless the slopes are made very flat, or are turfed at a great expense, the action of the water will in ordinary soil quickly cut them to the shape at which they will ultimately stand firm.

Having determined the quantity of water, and fixed the proportion of depth to width, and a minimum for both, chiefly with reference to navigation facilities, there remains to be determined the slope of the bed. If this slope is too great, the bed of the canal will be torn up, and the foundations of all bridges and other works will be endangered. Besides which, the difficulties of navigation against the stream will be largely increased. If, on the other hand, it is too small, a larger section of channel will be required to discharge a given quantity of water, and many additional works, such as falls or locks, will be required; there will also be danger of silt being deposited in the bed, or of the stream being choked by the growth of aquatic plants.

It is therefore necessary to avoid both extremes; but it is not always easy to do so, and in general a compromise has to be made. Moreover, as the velocity increases very rapidly with the depth, it is evident that a slope of bed which might be a very proper one for water of a certain depth, would be too great if it were necessary to increase that depth so as to throw an extra supply into the canal.

The minimum velocity required to prevent the deposit of silt or the growth of aquatic plants is about 1½ ft. a second, so that if a minimum of depth be fixed, we can find the minimum of slope necessary to secure any given discharge. Under ordinary circumstances this may be fixed at 6 in. a mile, though it is occasionally even lower than that.

The maximum is not, however, so easily fixed. It must in the first place vary with the nature of the soil of the bed. A stony bed will stand a velocity of 3 ft. a second, while sand will be disturbed by a velocity of 6 in. Again, the maximum velocity at which a boat can be navigated against the current at a profit is evidently a very intricate problem, depending on such varying data as the moving power employed, whether steam, animals, or men, the description of boat, value of the cargo, and so on. In some experiments made on the Ganges Canal it was found that at a velocity of 3·76 ft. a second the water just ceased to cut away the bank, and slightly deposited silt. With the ordinary soil of the plains, and taking everything into consideration, 3 ft. a second may be taken in India as a safe maximum velocity for these canals.

The upper part of the Baree Doab Canal has a fall of 4·2 ft. a mile over a bed of shingle and clay, but navigation at that point was not required.

The Ganges Canal starts with a fall of 2 ft. a mile, which soon diminishes to 1·25 ft., and this latter may be said to be its ruling gradient. With a depth of water not exceeding 5 ft., this gives a very manageable velocity both as regards the safety of the works and the navigation down stream. For up-stream navigation it would be advantageous to reduce it. But when 6, 7, or 8 ft. of water are thrown into this canal, the velocity due to the above fall is doubtless too high.

In the Sutlej Canal project, Captain Crofton fixed upon 2½ ft. as his minimum depth of water at full supply, and arranged his declivities of bed so that the calculated mean velocity of current should in no case much exceed 3 ft. a second.

For the Soane canals, the velocity has also been fixed at about 3 ft. a second (two miles an hour), the side slopes being 1½ to 1, and a bottom width equal to the depth plus one, squared, in feet.

From the above considerations, therefore, we can determine the section of the canal channel by the help of proper formulas. See CANAL.

The section of the water-channel and slope of the bed being determined, it is evident that the surface of the water may either be within soil, that is, below the natural surface of the ground, or above soil, when it will have to be retained by artificial embankments. If not merely the surface level, but the whole body of water is above soil, the embankments must be very massive, and may require to be puddled to render them water-tight. In the great Solani embankment the water is retained within a solid masonry revetment on each side backed up by an earthen bank averaging 16 ft. high and 40 ft. thick.

Although the water being thus raised above soil greatly increases the facility of irrigation by its command of level, the construction of such embankments involves great expense, and if any breach occurs, the damage done will be very great.

The most favourable conditions are when the canal water is partly within and partly above soil, that the earth excavated from the channel just suffices to build up the banks, while there is sufficient command of level for all irrigating purposes; and the nearer this can be approximated to, the more perfect will the canal be.

For sanitary reasons it may be desirable to keep the water, as a general rule, within soil; but the effect of this will be to increase greatly the cost of the canal; and if, as is often the case,

a sandy stratum underlies the superficial clay, it is very undesirable to dig down to the former, as much water may thus be wasted by leakage and absorption.

Alignment of the Canal.—The steps to be taken in fixing the line of the projected canal, and in marking it out when approved of, are similar to those described in the article on ROADS. The gradients have to be duly considered in both cases, though much more carefully in the former. The requirements of the different towns and villages, which, in the case of a road, have to be considered with reference to traffic, will have chiefly to be viewed in regard to irrigation, and secondarily only for traffic in the case of a canal.

The obstacles to be avoided, whether mountain torrents, swamps, or hills, are much the same, and the more elaborate methods of overcoming them required for canals will be described farther on.

If no good map of the country exist, one must be made. The next step will be to get a series of cross-sections of the country to be irrigated, from river to river, by means of lines of levels, from one to five miles apart, and having a direction at right angles to the watershed or supposed watershed; these are connected by lines carried along the river banks. The country being thus covered with a network of levels all reduced to the same datum line, and marked down on the map, the general line of watershed along which it is desirable as far as possible to carry the canal will at once be evident. This line, cutting the cross-sections nearly at right angles, should then be carefully levelled as a trial line, as well as any other alternative line that may present itself; and on this the general project will be based. The actual construction of the line will be similar to that of a road, but the curves must be made as flat as possible and very carefully rounded, or the action of the water will cut away the banks on one side and cause a deposit of silt on the other.

The cuttings are laid out and made like road cuttings, but the embankments must be different, as they have to retain within them a large body of water. Their thickness must therefore be very great on both sides of the water channel, and they vary in mean width from 30 to 100 ft., according to the depth of water. If leakage occurs, they must have a wall of puddle, or be otherwise rendered water-tight.

The considerations which determine the site of the canal-head have already been noticed. The canal should be made to tail into a river or reservoir, into which the surplus water unexpended will be discharged; and in order to secure an efficient scour, it will be advisable slightly to increase the velocity at the end. A fall into the river is generally the best way of effecting this.

The points at which branches should be taken off from the main line, as well as the general course of these branches, will be fixed from a due consideration of the levels of the country and the extent of culturable land requiring irrigation. If the main canal has been carried on or close to the watershed or backbone of the district, then the branches should be lined out as far as possible on the minor ridges which lie on both sides of the main ridge, the object in every case being to keep a sufficient command of level for surface irrigation. There is a further reason for carrying the canal channels on watersheds wherever possible, namely, to ensure the minimum of interference with the country drainage, and to ensure an efficient scour at the tail of the channel. The size of the branch channels and slope of their beds will be dependent on the same principles as those already noted in the case of the main line, and the same remark applies to the village water-courses which are led off from the main and branch lines, and from which it is now the most approved practice to deliver the water for the actual irrigation, its further employment being left to the cultivators.

4583.

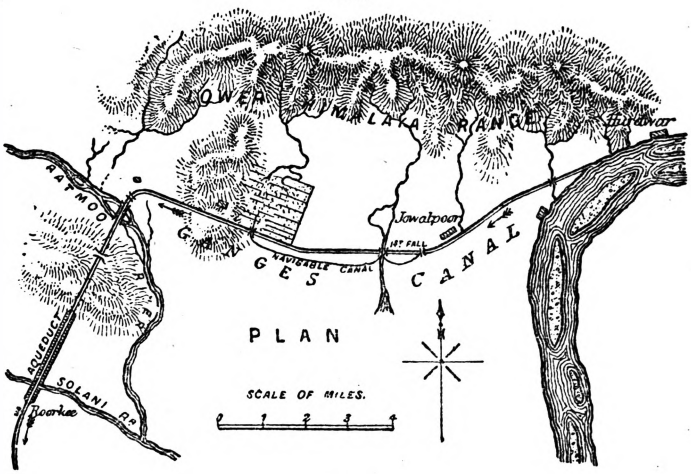

4584.

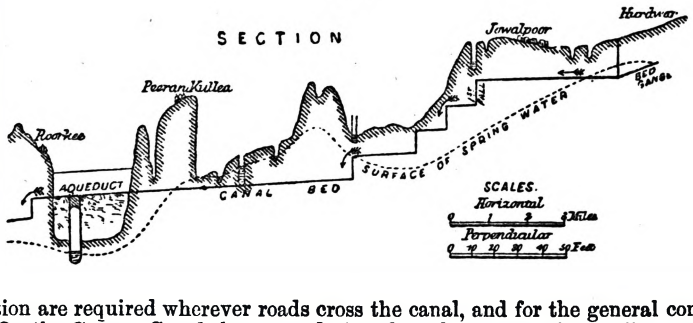

Bridges of communication are required wherever roads cross the canal, and for the general convenience of the country. On the Ganges Canal they were designed at about every three miles, and

when in the vicinity of large villages are provided with ghâts or steps for convenience of bathing. Care should be taken to provide sufficient headway under the arches or openings for laden boats to pass easily when the canal has its full supply. On the Soane canals 13 ft. are allowed for this purpose; and it is also desirable that the obstruction to the stream presented by the piers should be as small as possible. For this reason it will generally be advisable to widen the canal slightly at these points, so as to allow a full water-way for the stream through the bridge. Otherwise expensive precautions have to be taken to secure the foundations; and the increased velocity under the arches will render navigation dangerous or at least difficult.

A tow-path should be provided on at least one side of the canal at a constant level of 1 to 2 ft. above the water surface. It may be from 12 to 15 ft. wide in earthen section, and not less than 6 ft. under bridges; the tow-paths should be carried under the side arches of bridges, in no case through the abutments or wing-walls, the latter arrangement being an obstacle to free navigation.

A road is also desirable on one side of the canal for convenience of inspection. It may be 20 ft. wide and planted with trees. Tree plantations are also general along the canals of the N.W. provinces. No trees should, however, be allowed within 30 ft. of the water's edge, as their proximity interferes with the stability of the embankments.

Stations for the engineers and overseers employed on the line are also provided at intervals, and are generally fixed at the sites of the most important works.

Falls, Rapids, and Locks.—So long as the slope given to the bed of the canal is the same as the natural fall of the country through which the canal is excavated, the level of its bed will remain at a uniform depth below the surface of the ground. But although this can generally be managed in flat plains, throughout the greater portion of their length, yet in the upper portion of the canal the slope of the ground is very much greater than that which it would be proper to give to the canal bed, and peculiar arrangements have to be made to compensate for this difference of slope. Figs. 4583, 4584, illustrate the northern division of the Ganges Canal. The section, Fig. 4584, will show how this excess of fall has to be overcome, by laying out the canal bed in a series of steps, so as to keep it at a tolerably uniform level below the surface of the country, until the flat country is reached, where the slope is the same as that proper for the canal.

The points where the bed is let down from a higher to a lower step are called falls. Their

4585.

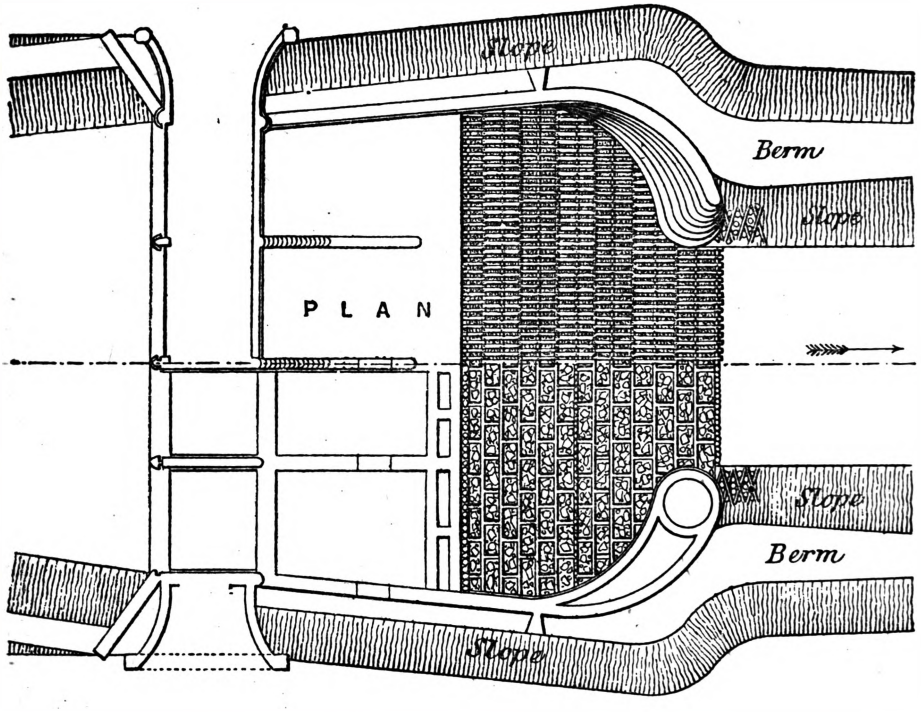

4586.

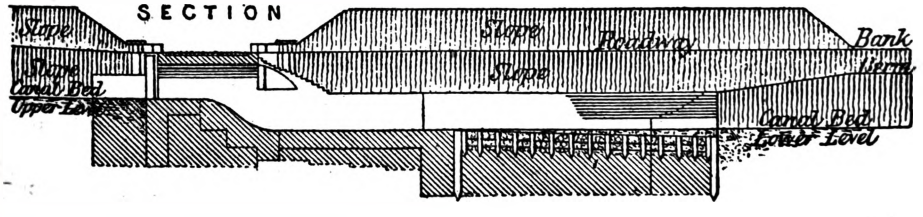

location should be near the places where the canal bed, if continued without a break, would have to be carried in embankment above the surface of the country; their exact position is generally made to coincide with the requirements of a bridge or some other masonry work.

It is evident that the fall must be of some more durable material than earth to resist the action of the water tumbling down the height of the step, and masonry is therefore employed. The bed of the canal has also to be protected by a masonry flooring from the plunging action of the water, and the banks must be revetted for a considerable distance below. The exact shape of the fall itself is a point on which there is much difference of opinion. Ogee falls, Figs. 4585, 4586, were employed by Sir P. Cautley, on the Ganges Canal, with the idea of delivering the water at the foot of the fall as quietly as possible. On the Baree Doab Canal, vertical falls, Figs. 4587 to 4589, are used, the water being received at the bottom into a cistern sunk below the level of the flooring, which thus forms an elastic cushion to receive the shock, instead of opposing a dead resistance to its force, while the accelerated velocity of the falling water in a forward direction is also checked. The action of the water is still further lessened by making it play over a wooden grating, by which it is divided into a number of filaments or threads, on the same principle as the rose of a common watering pot.

4587.

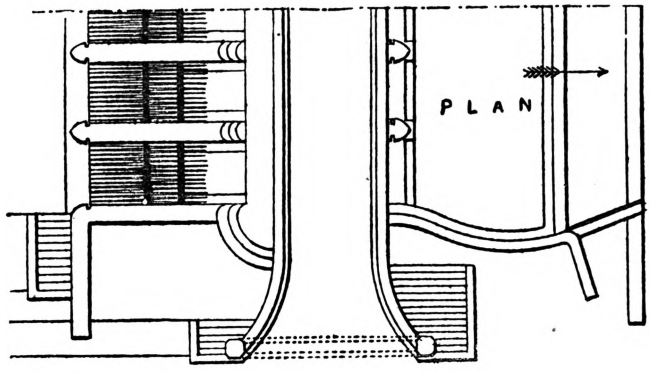

4588.

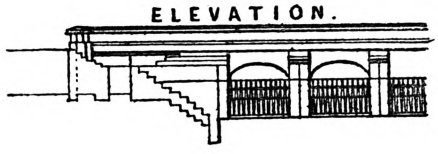

4589.

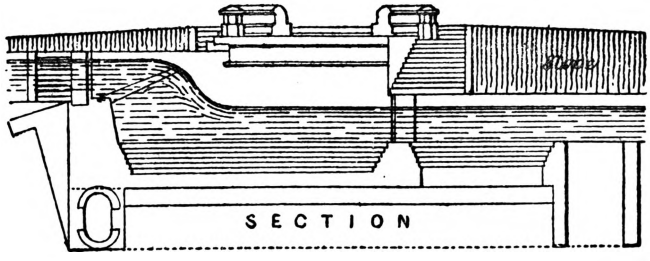

The very dangerous scouring and cutting action of a large body of water falling over a height of even a few feet, must be seen to be fully appreciated. The greater the height of the falls and the depth of water, the more violent, of course, will be the action; those on the Ganges Canal are not higher than 8 ft.; but with 6 ft. or more of water going over, the action is most severe, and nothing but the very best masonry is capable of resisting it. If stone can be obtained, it should always be used: if not, none but the hardest bricks must be employed, laid in an unyielding foundation with fine mortar joints; the banks must be revetted with masonry for a considerable distance down stream, and the bed of the canal protected by a solid masonry flooring, the tail of which is defended by a row of sheet piling. The fall should be divided into distinct chambers, which can be laid dry, one by one, for the sake of repairs, without stopping the canal. On the Ganges Canal the masonry flooring is continued to the end of the chamber, beyond which crib-work of dry boulders is employed as far as the end of the revetment walls.

The effect of a fall occurring at the end of a canal reach, is to increase the velocity and diminish the depth of the water for a considerable distance above the fall. This increase and diminution are gradual from the point where this action commences down to the fall itself, where they attain a maximum, so that the depth of water passing over the fall is very much less, as the velocity is very much greater, than the normal depth and velocity above. This increase of velocity before the water reaches the fall produces a dangerous scour on the bed and banks of the canal; and in order to guard against this, it has been found necessary to head up the water at the falls on the Ganges Canal by means of sleepers dropped in the grooves of the piers. It has also been proposed to narrow the falls, so as to produce the same effect. Either of these ways is probably cheaper, though less effective, than protecting the beds and banks of the canal channel by artificial means a sufficient distance above the fall; but without thus raising the crest of the fall this protection would have to be extended for something like a mile above in order to be efficient.

The violent action of the water at the foot of the fall, having a momentum due not only to its vertical height, but also to the depth of water going over it, can only be guarded against by employing the best and hardest materials available to receive the shock of the water, and by the efficiency of the tail revetments.

The wearing action of a large body of water under the above circumstances falling incessantly upon masonry, however strong and well built, is so constant a source of anxiety and danger in spite

of all precautions, that many methods have been devised for accomplishing the necessary change of level in other ways.

Rapids, Figs. 4590 to 4592, have been employed with success on the Baree Doab Canal; the fall is laid out on a long slope, 15 to 1, instead of by a single drop; the slope being paved with boulders, laid without cement, and confined by walls of masonry in cement, at intervals of 40 ft. both longitudinally and across stream. The longer the slope the more gentle is, of course, the action of the water, but the greater also is the quantity of masonry employed. In general, the choice between the two is a mere question of expense and material available. On the above-mentioned canal rapids were adopted wherever boulders were procurable at moderate cost.

4590.

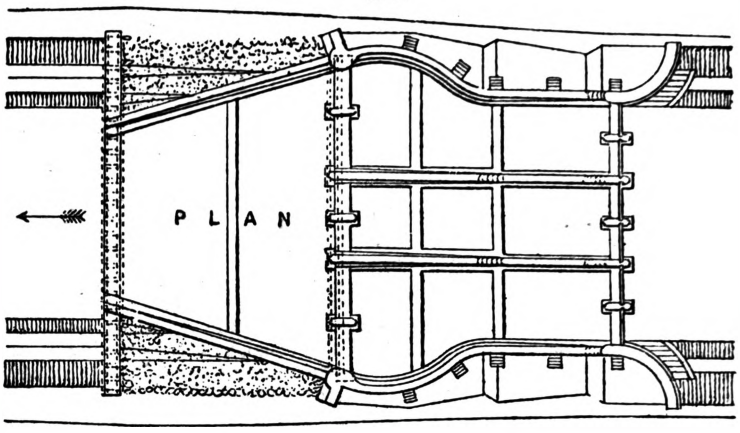

4591.

LONGITUDINAL SECTION

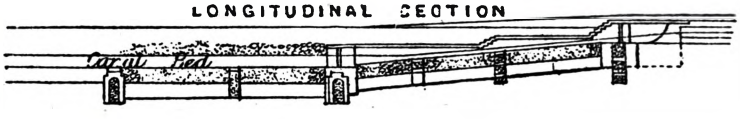

4592.

TRANSVERSE SECTION.

Rapids and falls interfere with navigation, and where this must be uninterrupted a system of *barrage* or of *locks* must be provided.

Headworks, Dams, and Regulators.—The works at the head consist essentially of a dam across the river, by which the water is held up and checked in its onward flow, and a regulator across the head of the canal channel by which the proper quantity of water is admitted.

In most cases the canal is taken out of a branch of the main river, and the permanent dam is thrown across the branch only, the water being diverted from the main stream into the branch by temporary dams constructed of boulders, which are swept away on the rise of the river, and are annually replaced.

Dams are either made solid, when they are called weirs, or they may be provided with openings.

The advantage of the weir is that it is self-acting, requiring no establishment to work it, and if properly made ought to cost little for repair. It is also a stronger construction, better able to withstand shocks from floating timbers and other obstructions. Its disadvantages are that its first cost is generally greater, and that it causes a great accumulation of silt above it, and interferes far more than an open dam with the normal regimen of river. It is possible that in certain cases this might result in forcing the whole or part of the river water to seek another channel, and the possibility of this should always be taken into account; but if the river has no other channel down which it could force its way, the accumulation of material above the weir would be an advantage rather than otherwise, as adding to its strength. The advantage claimed for the open dam is that the interference with the normal action of the river is reduced to a minimum, the strong scour obtained by opening its gates effectually preventing any accumulation of silt above; its first cost too is generally smaller than that of a weir.

A dam consists of a series of piers at regular intervals apart, on a masonry flooring carried right across and flush with the river bed, protected from erosive action by curtain walls of masonry up and down stream.

The piers are grooved for the reception of sleepers or stout planks, by lowering or raising which the water passing down the river is kept under control. The intervals between the piers are generally 10 ft., which is a manageable length for the sleepers. If the river is navigable at the head one or two 20-ft. openings fitted with gates must be provided to enable boats to pass.

The flooring must be carried well into the banks of the river on both sides, to prevent the ends of the dam being turned; and the banks and bed of the river will generally require to be artificially protected for some distance, above and below the dam, to stand the violent action of the water when the gates are partially closed.

The two flanks of the dam for some length are generally built as weirs, that is, instead of piers and gates the masonry is carried up solid to a certain height, so that when the water rises above that height it may flow over the top of it. The advantage of this arrangement is that it affords an escape for water in case of a sudden flood when the dam may be closed, while when the water is low it is kept in the centre of the river and away from the flanks, and thereby causes a more perfect scour.

When the river is subject to sudden and violent floods, damage might be done before the sleepers could be all raised one by one; it is better therefore to employ flood or drop gates, Figs. 4593, 4594, in such a case, that is, gates which turn upon hinges in the piers at the level of the flooring, and which when shut are held up by chains against the force of the water. In case of flood the chains are loosened, the gates drop down, and the water flows over them. Should the intervals between the piers be over 10 ft. there would be a difficulty in hauling the gates up again.

4593.

4594.

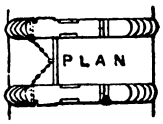

4595.

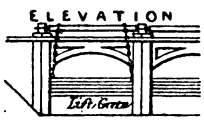

4596.

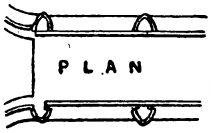

A bridge of communication may be made between the piers of the dam if required. But as it is not desirable to have it obstructed with traffic, it may be merely a light foot-bridge, or the intervals may be spanned temporarily with spare sleepers.

The dam and regulator are generally close together and connected by a line of revetment wall.

The regulator, Figs. 4595, 4596, like the dam consists of grooved piers resting on a firm foundation carried across the canal bed. As floods are made to escape down the river, and are shut out from the canal, drop-gates will not be necessary for the regulator, and the water may be admitted and controlled either by planks alone or, as is usual, by a gate moving up and down in the grooves, on to which planks can be dropped when necessary one by one. The gates are raised or lowered by a windlass and chains; the windlass may be movable, or one may be fixed between every two piers and worked by handspikes.

The piers of the regulator are generally connected by arches, so as to form a regular bridge of communication across the canal.

The bed and banks must be defended by masonry, as in the case of the dam, so as to be safe from the water's action when the gates are partially closed.

The flooring of the regulator at the head of a canal is a convenient datum for all the canal levels. A water-gauge should be fixed on it at one of the piers, so that the amount of water passing into the canal may be accurately known.

The above description may be understood to apply to all regulators employed on the canal, as well as to the one at the head. Thus there will be a double regulating head where each branch is taken off, one regulator being fixed across the head of the branch line to admit the necessary amount of water which the branch is calculated to hold, and the other being built across the main channel at the same spot. By the simultaneous working of the two it is evident that the water will be thoroughly controlled.

4597.

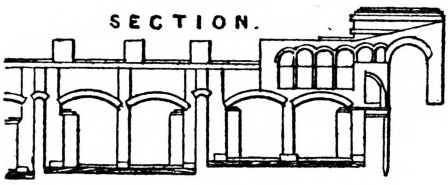

4598.

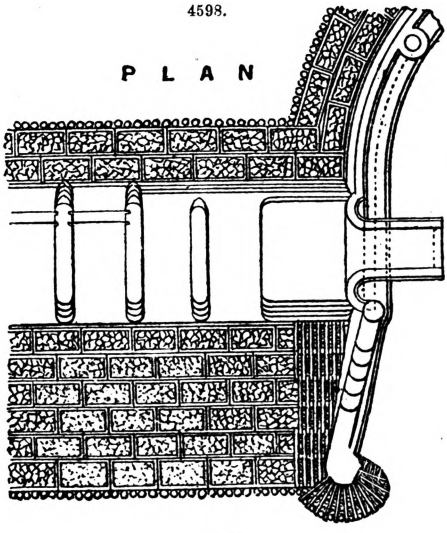

4599.

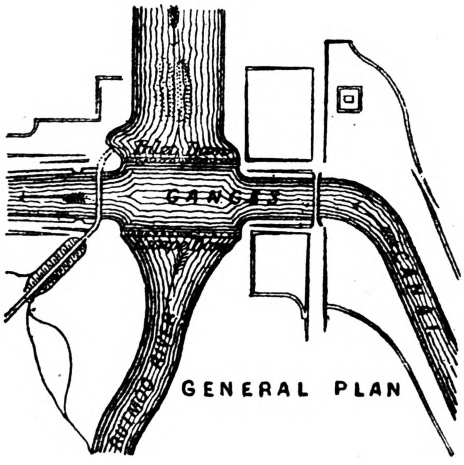

4600.

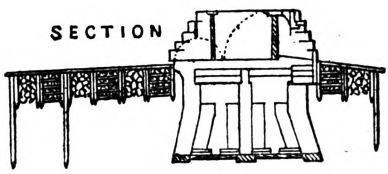

Regulators of smaller size will also be required at the head of each principal water-course, where it is taken off from the main line for irrigating purposes. A single opening will generally

be enough, and gates sliding up and down in the grooves of the abutments may be worked by a ratchet and lever or a windlass with spokes.

But in order to establish a complete control over the water in the canal channel, provision must be made for any excess which may arise from sudden rain floods or from the water not being always required for irrigation. This is effected by means of escapes, which are short cuts from the canal to a river or other natural water-course into which the excess of water can be discharged. Figs. 4597 to 4600 are sections and plans of the escape dam, flank, and works at Dhunowree, on the line of the Ganges Canal; the number of openings in the dam is forty-seven, of which five on each flank are arranged as ogee falls, and the remainder are provided with drop-gates. Escapes should be provided at certain intervals all the way down the line, and a double regulating head should be built at the point where the escape is taken off, as in the case of a branch canal. On the Ganges Canal they were projected at about every forty miles, but much must depend on the convenience with which they can be made, that is, on the proximity of the canal to the river or water-course into which the escape is to be conducted. They should also, if possible, be provided at all dangerous points, such as above a long line of heavy embankment, where, in case of the bank bursting, great damage would ensue. The cut should be made large enough, and with sufficient fall, to carry off the whole body of water that can reach that point, so that, if necessary, the canal below the escape may be at any time laid dry for repairs, without stopping its running above, by opening the escape regulator and shutting down the corresponding one across the canal. By this means also that part of the canal above the escape may be opened when completed, while work on the lower portion can proceed.

Drainage Works, Aqueducts, Inlets, and Superpassages.—These are an important class of works by which the canal is carried over the various obstacles to be met with in its course.

If the line of a torrent cannot be diverted, there are three cases under which it may have to be crossed. 1st, when it is on a lower level than the canal; 2nd, when on the same level; 3rd, when it is on a higher.

In the first case, when the torrent or drainage line is on a lower level, the canal is carried over it on an aqueduct. The valley drained by the torrent will be embanked across in the usual way, care being taken that sufficient water-way is provided under the aqueduct for the torrent to pass when in flood.

The second case is where the torrent is crossed on the same level. It may be a small drainage channel only occasionally filled, or at least never bringing down but a small body of water. In that case it simply becomes an inlet, and is provided for by an arched opening through the embankment by which the water can be passed into the canal. In this way all mere surface drainage is provided for at various convenient points, though as the course of the canal when once clear of the difficult ground above lies close to the watershed of the country, the amount of intercepted drainage is small.

But if the torrent is of large dimensions and bringing down a great volume of water at a high velocity, the above method will not answer; the water loaded with silt would choke up the canal bed, and its force would destroy the embankments and do irretrievable damage. More elaborate arrangements have therefore to be made.

A regulating bridge is placed across the canal channel provided with the usual sluice-gates. A dam is built across the channel of the torrent provided with flood-gates. Under ordinary circumstances the dam is closed and the regulating bridge is open, so that the canal water flows along as usual. But when the torrent is in flood, then the dam must be open and the bridge closed, so that the flood water may cross the canal and run down its own channel. The bed of the torrent below the dam must be paved for a certain length to prevent erosion, and the sides of canal and torrent have to be revetted for a considerable length to prevent their being cut away by the water.

The third case is where the torrent crosses on a higher level, when it has to be carried over on an aqueduct, generally called in that case a superpassage, to distinguish it from the first case, where the canal flows over the torrent. This becomes a very expensive and troublesome work, as a large water channel has to be allowed to carry any extraordinary flood over the canal in safety, and sufficient headway must be allowed under the superpassage so as not to interrupt the navigation.

It possesses, however, the great advantage of keeping the canal completely free from any influx of flood water from the torrents, which is always more or less heavily charged with silt. It has the additional recommendation of not requiring the maintenance of a large establishment every rainy season, as in the case of a level crossing, where the regulating apparatus must be worked by manual labour; and lastly, the canal supply can thus be kept up uninterruptedly, there being no necessity to shut it off at the crossing to keep the silt-laden flood water out of the channel below. These recommendations apply equally to passage by aqueduct, and render them both generally preferable to a dam when the levels will admit of the substitution.

The distribution of the water in India is effected by means of principal water-courses, which

are small branch canals with a masonry regulator at the head, from which the cultivators make their own water-courses to their fields. Figs. 4601, 4602, are of water-courses, termed in India

Rajbuhas, in excavation and in embankment, and Figs. 4603, 4604, general arrangement of canal and water-courses. On the older canals irrigation is carried on from the main channel itself, but the inconveniences arising from this practice were found in India to be so great that it has been generally discontinued.

The water-courses, constructed on the most approved system, form a continuous line of irrigating channel on each side of the main canal, and generally parallel to it. This line is fed by cuts from the main canal at regular intervals, say three miles apart, and in these cuts are fixed the heads of irrigation of all the village water-courses which are made by the villagers themselves.

The canals recently constructed in Spain under the superintendence of J. F. Bateman and George Higgin, one to irrigate the valley of the Henares, in the provinces of Madrid and Guadalajara, the other to irrigate the valley of the Esla, in the provinces of Leon and Zamora, are instructive examples of the modern system of irrigation. From Higgin's account of the construction of these canals, recorded in the Trans. Inst. C. E., vol. xxvii., we extract the following particulars;—

4603.

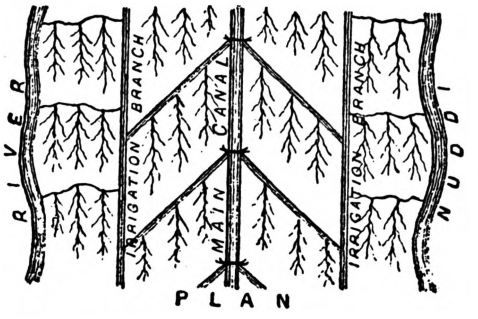

4604.

The river Henares takes its rise amongst the mountains of the Somo Sierra, and after running for a length of ninety-six miles falls into the Jarama not far from Madrid. Its course is extremely steep, and the current very rapid. The total fall of the river from the weir of the new canal to Alcalá, a distance of thirty-six miles, is 407 ft., giving a mean fall a mile of 11·3 ft. The geological formation of the valley is the upper tertiary. It forms a portion of a vast hollow basin, the edges of which are cretacean. The total length of the new canal is 46½ kilomètres, or twenty-eight miles. It takes its water from the river at a point sixteen miles above Guadalajara, just below the junction of the Sorbe and Henares, and ends at Alcalá. The total area of ground embraced by the canal is 12,400 hectares, = 30,628 acres. Of this amount, however, some portion cannot be irrigated, and after deducting this, and that due to roads, streams, towns, &c., there remain about 11,000 hectares, say 27,170 acres of ground capable of irrigation. For this purpose the volume of water conceded by Government is 5 cubic mètres a second, = 175 cub. ft., for nine months, from October to June inclusive, and 3 cubic mètres a second, or 105 cub. ft., for the remaining three months. From accurate measurements made near the new weir since the commencement of the works, it appears that during the months of July, August, and September, the average quantity of water carried by the river is 210 cub. ft. a second, the lowest point which it has touched being 140 cub. ft. a second. During the remainder of the year it carries an average of 300 or 400 cub. ft. a second. It is subject, however, to enormous floods, which come down with great rapidity; and in designing the new weir it was necessary to provide for the floods. Several came down during the progress of the works, some of which were estimated to be carrying 8000 cub. ft. a second. The weir, it is calculated, will discharge 20,000 cub. ft. a second, which is more than in all likelihood it can ever be called upon to do.

The preliminary operations were commenced on the 1st January, 1863. The most difficult portion of the canal is comprised in the first ten kilomètres. Immediately after leaving the river, the canal runs into a heavy rock cutting, 2500 mètres long, and with an average depth of 16 ft. At 2780 mètres from its commencement the canal reached the most difficult portion of its course, a high limestone cliff, which overhangs the river. In the original plans it had been proposed to carry the canal in a covered way along the débris in front of this cliff, but a slight examination showed that it would be impossible to do this with safety, and it was at once decided to tunnel the cliff. This tunnel has a total length of 2900 mètres, = 3171 yds., and at its exit a further length of 300 mètres of deep cutting in gravel had to be carried between walls. At the ninth kilomètre the canal crosses the Madrid and Saragossa Railway, and at the tenth kilomètre a wide torrent bed, known in the country as an arroyo, had to be crossed. This and the railway crossing were the binding points in this section of the canal; and it was with reference to them that the height of the new weir was fixed.

The site chosen for the new weir was the only one where a good foundation could be expected. Fig. 4605 shows a cross-section on the axis of the weir. The bed of the river was composed of compact clay rock, very impermeable, mixed with strata of excessively hard conglomerate. The crest of the weir was at an average of 6 mètres above the river bed; but on the right bank, where the river channel ran, it was considerably deeper. Fig. 4606, a cross-section of the weir as constructed. The front wall, to a height of $2^{m} \cdot 50$ below the crest of the weir, was built of rubble in hydraulic mortar, the foundation being benched into the rock, which was blasted for the purpose. The main body of the weir was of hydraulic concrete, the apron being faced with cut stone blocks, 2 ft. deep and 1 ft. thick, every fifth row being a bond 3 ft. deep and 1 ft. thick. The toe of the weir was formed by two stones, 3 ft. 6 in. deep and 1 ft. thick, let 3 ft. into the solid rock, and from this sprang the apron. From the top of the rubble wall to the crest the weir was entirely of cut stone. Three courses 2 ft. high, and one course 2 ft. 4 in. high, carried it up to the due level. The lower course of stones were immense blocks, measuring 5 ft. on the bed, 2 ft. high, and never less than 3 ft. 3 in. on the face. They were cut with a check, upon which the succeeding course rested, and V joints were cut in every face, and were run in with pure cement after the

stone was in its place. The back portion of these stones was filled with cut stone, carefully jointed to fit exactly into the places, and the whole when completed formed a perfectly impermeable mass of cut stone. For the purpose of guarding against filtration, a continuous line of cut stone was let into the rock in the centre of the concrete. These stones were 2 ft. deep, one half being sunk in the rock and one half rising up into the concrete. They were all bedded in pure cement, and were cut with V joints, also run in with cement. Fig. 4607 shows the form of the weir on plan. It is composed of two curves, one of 121 mètres radius, and the smaller one of 60½ mètres radius. The abutments were founded upon the rock in a similar manner to the weir, and were built of large blocks of rock-faced ashlar in courses 50 centimètres high.

4605.

4606.

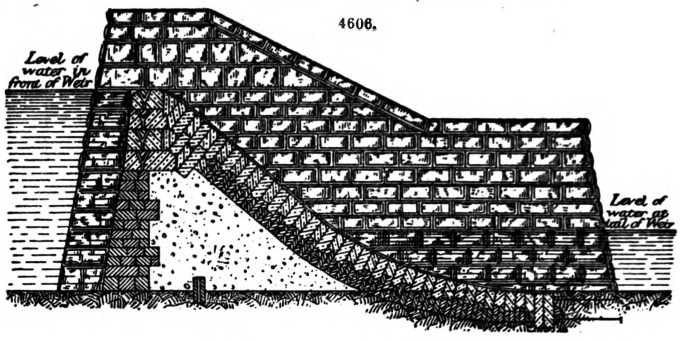

4607.

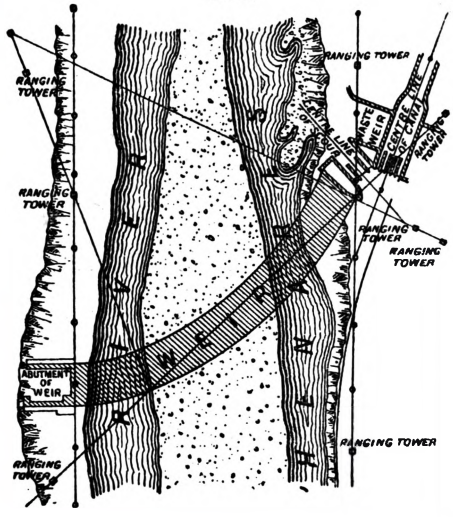

4608.

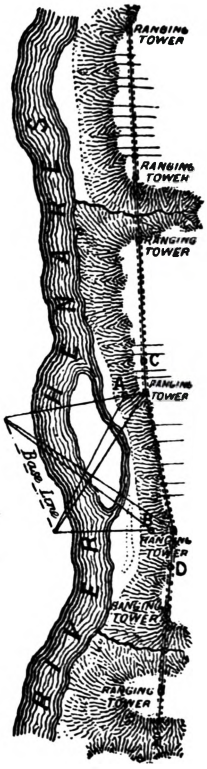
RANGING TOWER
RANGING TOWER
RANGING TOWER
RANGING TOWER
RANGING TOWER
RANGING TOWER

this was not done, it being determined to run these in by triangulation. For this purpose a base line was selected on the opposite side of the river, and being carefully measured, the distances by triangulation were obtained from the centres of the two towers fixed on the top of the cliff over the line of the tunnel. The direction of the galleries was then given from the measured base, and a stone, with an iron centre let into it, was sunk at the entrance of each gallery, and the distance of these points being again found by another measurement, the distance between this and the first calculated distance gave the length of the gallery to the centre of the tunnel. When this point was reached, the measured angle upon the base was set off, and the work was commenced upon all four faces. About 70 or 80 mètres were driven in this way, the tunnel being taken out for its full width. As, however, a long distance had to be driven before meeting the next faces, and it was considered inadvisable to drive a heading on account of the small size of the tunnel and consequent extra cost, it was thought that the risk of going on upon the calculated lines was too great, as a slight error, either in the measured base or in the angles, would have created a large error in the lines of the work. A couple of shafts were accordingly sunk at the points marked C and D, when, to the satisfaction of all concerned, the new lines dropped from the surface were found to coincide almost exactly with those given by the triangulation.

The section of the tunnel and the different thicknesses of arching are shown in Figs. 4609 to 4611. The whole of the brickwork was set in hydraulic mortar. As it was found, however that

4609.

4610.

4611.

the pure lime and sand set too quickly, the custom of the country was followed, and a percentage of white lime was mixed with the hydraulic, the proportion being 1 part of hydraulic, 1 part of white lime, and 4 parts of sand. This mortar was longer in setting than the pure mortar, and gave much better results. It cannot be used where the work is liable to be immediately covered with water; in the tunnel this was not the case.

The clear diameter of the tunnel inside is $3^{m}\cdot40$, and its height $2^{m}\cdot22$. It was finished on the 30th May, 1866, a year before the weir. Air-shafts were left at three of the faces where the tunnel came out near the surface, and four of the galleries were bricked in, so that easy admission might be had to the tunnel at any time, Figs. 4612 to 4614. The remainder of the galleries and shafts were filled in.

The only other works of importance on this canal are an aqueduct over the Arroyo Tejada at the entrance of the tunnel, the bridge under the railway, and the bridge over the Arroyo Majanar.

4612.

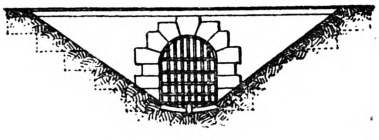

4613.

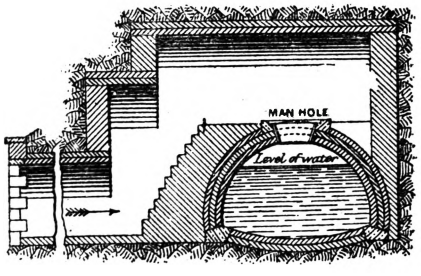

4614.

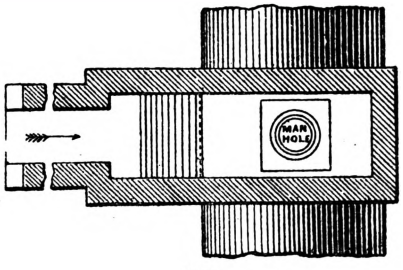

4615.

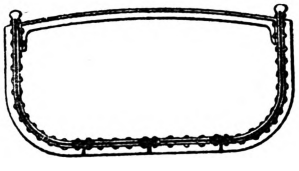

The difficulties presented by the bridge under the railway were simply those caused by the work having to be carried on without disturbing the passage of the trains. This was done by shifting the line and building one-half of the abutments at a time. The railway was carried on wrought-iron girders sent out from England. In consequence of the little headway which could be obtained over the Torrent Majanar, it became necessary either to carry the canal over by a tube or under by a siphon. It was resolved to adopt the former plan, and the canal is carried over in a wrought-iron tube of 20 mètres, say 65·6 ft. span, Fig. 4615. The joint of this tube with the masonry was made as follows;—A strip of 7 lb. lead was bolted securely to the end flange. The lower end of this lead was fixed in a channel cut in the stone, and run with a mixture of pitch, tar, and sand. The sides were completed in the same way. By this means the tube can change slightly by contraction or expansion without risk of leakage. In addition to this joint, the tube rests on a flannel pillow soaked in tallow, and the side flange was packed with oakum and tallow.

There was thus a double joint. This tube was the last thing done. It was immediately filled with water to the depth of 5 ft., and has since been kept full. It is perfectly tight, both at the joints with the masonry and in the other parts. With a load of 93 tons of water it sank ¼ in. in the centre. At the side of this tube are three sluices for discharging the canal if necessary.

The remaining works on this canal are not of much importance, the only considerable one being an aqueduct over the Arroyo Dueñas, consisting of two arches 20 ft. span each, with a height from the bed of the Arroyo to the coping of the canal of 26 ft. The approach to this bridge is rather heavy, the bank containing 32,000 cub. yds. A good deal of difficulty is experienced in Spain in works of this class, from the exceptional character of the streams and water-ways. The rainfall in most parts of Spain is irregular, and large quantities fall within a few hours. Thus, in the month of May, showers will frequently fall in Madrid almost tropical in volume, to be succeeded by three or four months of nearly perfect dryness. From the denuded nature of the country, and the absence of any species of herbage, the rain runs off with great rapidity: every depression becomes for the time being a torrent, and it is necessary to provide for their discharge. As they all bring down large quantities of gravel, it is not possible to pass them into the canal; and for the same reason it is dangerous to pass them under the canal, unless a free discharge can be made for them at the lower side. In cases where this was difficult, and the nature of the ground permitted it, these streams are carried over the canal by means of small iron tubes, Fig. 4615. In the Esla Valley, where the extreme flatness of the ground, and the absence of any defined water-courses, render it difficult to pass the streams under, the greater portion of them are passed over the canal in this manner. In many cases the country roads become torrent-beds in time of rain, and provision has to be made for both kinds of passes. These were variously treated, according to circumstances. In some instances headway was obtained by altering the canal section to a wide, shallow bed; in others, the canal itself was passed under by means of a masonry siphon. In all the works of the canal economy was sought, as far as was compatible with good workmanship. The greater portion of the ordinary roads were passed over by small timber bridges. Where the roads were of more importance, brick bridges were constructed. All works under the water-line were built in hydraulic mortar; above that line, in white mortar. All arches, both above and below the water-line, were turned in cement. At all the mill-falls sluice-gates are provided on the main line of the canal, the fall having a slope of 2 to 1; it is paved with cut stone 9 in. deep, laid in hydraulic mortar on a bed of concrete 18 in. thick. The water is measured out to the mills over an iron weir similar to the system adopted for the measuring of the irrigation water. One hundred litres a second, falling 1 mètre, is taken as an effective horse-power. This is equivalent to about 44,000 lbs. lifted 1 foot high in a minute. The banks where the canal ran above the ground were made of well-selected earth, rammed in layers about 6 in. thick, and each layer thoroughly soaked with water.

The sections adopted for the first division of the canal are shown in Figs. 4616, 4617. The inside and outside slopes are 1½ to 1, and the banks are $1^{m}\cdot80$, = 6 ft., wide on the top.

4616.

4617.

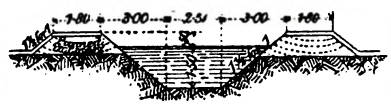

The depth of water in the first few divisions is $1^{m}\cdot50$, = 5 ft., and the velocity adopted was 70 centimètres, say 2 ft. 4 in. a second. This is rather high, but it is a matter of importance in Spain to avoid exposing the water in wide shallow channels; as with a less velocity weeds grow freely. Many of the old canals and water-courses of Spain have a mean velocity of 90 centimètres, or 3 ft. a second.

As to the best method of measuring the water to be supplied to the landowners. In the old Moorish works no actual measure of water was attempted in the sense at present understood. The quantity of water in the river or canal was divided proportionally over the lands irrigated: if the river brought more water, each canal received more; if less, less. Some of their systems for dividing the water were sufficiently ingenious. The system adopted at Elche was that used by the Moors before their expulsion from the country. The quantity of water in the river is divided into twelve equal portions, each of these portions being called a hilo de agua, the "hilo" being the twelfth portion of the river running for twenty-four hours. These are sold every morning by public auction, and the prices they fetch are almost incredible. The system by which the proper proportion of water is taken off for each canal is shown on Figs. 4618, 4619. The water is conducted along a level masonry channel with a very slow velocity, till it falls over a drop. At a distance of 1 mètre farther on it falls over another drop. In the intermediate space between these two drops is fixed a little pier, which divides the breadth of the channel into two portions, the smaller one being more or less that belonging to

4618.

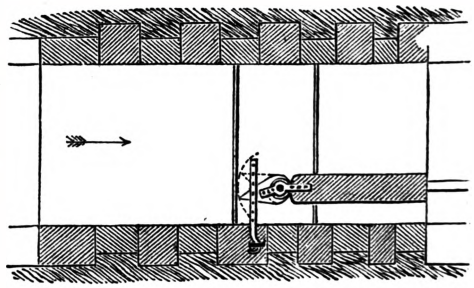

4619.

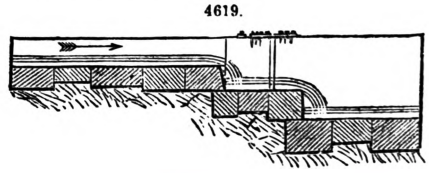

the canal for which the water has to be taken. The point of this pier consists of a movable vane, terminating in a sharp edge, which, when it is in a straight line with the pier, almost touches the first drop. It is evident that by moving this arm, the sheet of water flowing over the drop can be divided within certain limits with considerable accuracy. After every sale the person in charge of the distribution goes round and fixes these arms, allowing to each channel the proportion of water which corresponds to it; and thus they remain for twenty-four hours, until the next sale takes place, and a new division becomes necessary.

Figs. 4620 to 4622 show the method of dividing the waters in Lorca. In this case the space through which the water passes is divided into the number of proportional parts or hilos supposed

4620.

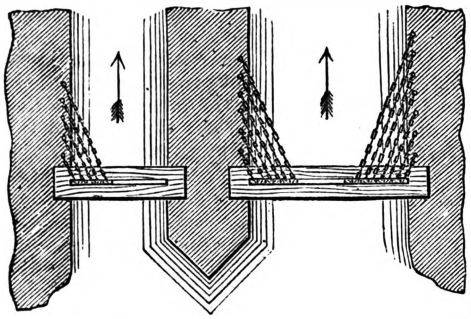

4621.

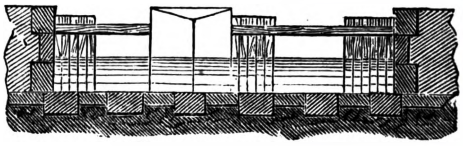

4622.

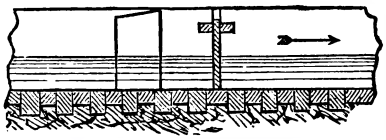

to be in the river. At the left-hand side is the opening through which flows the water which it is proposed to take off for the secondary channel. Both these openings are capable of being closed by small vertical bars of wood, which drop into a channel cut into the masonry below, and are held at the top by two iron bars. There are exactly as many of these wooden bars as there are hilos in the stream; if, for instance, the main stream carries twenty-four hilos, and it is necessary to take ten off for the secondary channel, fourteen of the wooden bars are taken out of the principal channel and ten out of the side one. It is manifest that as a measure of water this is open to many objections, but it is ingenious and interesting when it is considered that it has been in use probably upwards of eight hundred years.

The principal objects to be sought in a module are, simplicity of arrangement of the different parts, freedom from friction or any similar deranging cause, constant discharge under varying heads, and, of course, an exact measure of quantity. It is of great importance that there should be no concealed machinery, not only from its liability to derangement, but because there is then so much more liability to an alteration in the discharge, without its being noticed by the guard. It is also of importance to have, if possible, such a measure as can be easily inspected by the land-holders, in order that each man may, if he pleases, satisfy himself that the proper quantity of water is flowing into his channel.

The Milanese module, Figs. 4623, 4624, is perhaps the one best known. The principle of this module is that of discharging the water through a certain opening under a constant head. For this purpose a unit of measure was fixed on, called the "oncia magistrale," which is that quantity of water which flows freely under the sole influence of pressure through a rectangular opening having a uniform height of 7·86 English inches, a breadth of 4·12 English inches, and a constant head above the upper edge of the outlet of 3·93 English inches. The water is admitted from the main canal by a sluice into the first chamber, which, according to law, ought to have a length of at least 20 ft., in order to deaden the flow of the water. The floor of this chamber is inclined from the sluice up to the outlet, and in some cases a covering of planks or slabs, called the cielo morto, is placed across the chamber at the regulation height. It is the guard's duty to see that the water in this chamber does not rise above the height; and for this purpose he is charged with the key of the sluice. The outlet is cut in a slab of stone, edged frequently with iron. It is evident that if this aperture were cut in a thin plate, if the head of water were constant, and if it arrived at the aperture in a state of stillness, a result as nearly exact as possible could be obtained. In practice, however, it is not very accurate; the outlet given above being assumed as a unit, any number of "oncias" are supposed to be given by merely increasing the width of the opening by the required number of oncias; and it is supposed that this will give a simple multiple of the first unit.

4623.

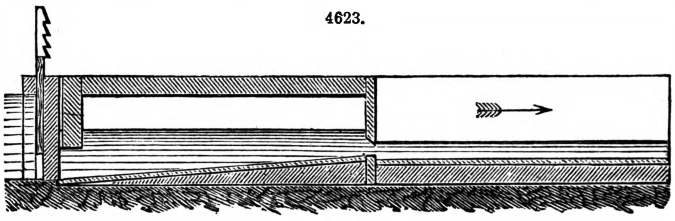

4624.

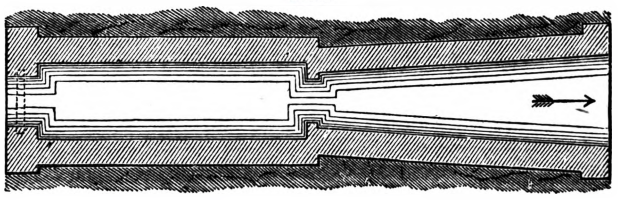

This is not, however, the case. By the addition to the width of the opening, the discharge increases more than a certain number of units; thus, an opening of the width of six oncias discharges much more than six separate openings of one oncia each. The water arrives also with too much velocity at the aperture, as the dimensions required to diminish it and the other points are never strictly observed; and the result is, that while the Milanese module possesses some of the elements required in a good module—simplicity of arrangement and facility for examination both by the guard and by the people interested in the irrigation—it is erroneous in its construction, and does not give unvarying discharges.

4625.

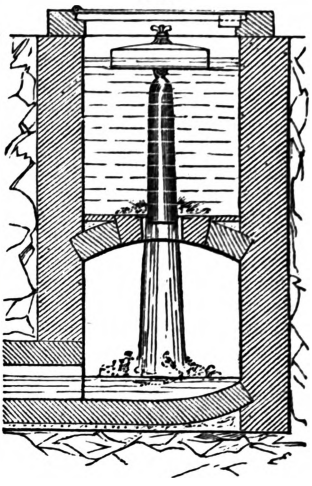

On the Marseilles Canal, water is measured by being allowed to fall into a tube which passes through the bottom of the water-chamber. This tube, being attached to a float, rises and falls with the water, and preserves the mouth of the tube at a fixed level below the surface. In practice this does not work well, as it is almost impossible to preserve free working of the tube in the bottom plate, and at the same time to avoid leakages. This plan, however, has suggested to Ribera the most ingenious module which has perhaps yet been devised, Fig. 4625. A chamber is constructed at one side of the canal, into which the water is admitted through a screen. In the floor of this chamber is fixed a wrought-iron plate, having in it a circular hole of a given diameter. Into this hole hangs a pendulum of parabolic form suspended by a float, the water escaping in the space left between the pendulum and the orifice. The dimensions of the pendulum being accurately calculated, it is evident that with the rise or fall of the water a greater or less opening is left for the discharge, which can therefore be kept constant under all heads. This module is entirely free from most of the objections that the others are open to. There is no friction of parts, no liability to derangement, and the discharge is made under one of the few conditions in which it is believed water can be accurately measured. The only objections to it are, the loss of head and the disturbance that might result from the deposit of mud on the floor of the chamber, in which case the orifice would assume a trumpet form. As most of the rivers in Spain bring down large quantities of mud in suspension, this objection might have some force.

The module adopted on the Henares and the Esla canals, Figs. 4626 to 4629, cannot lay claim to novelty; but it is believed it will fulfil its purpose practically. The water is merely measured by

4626.

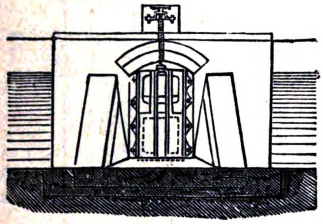

4627.

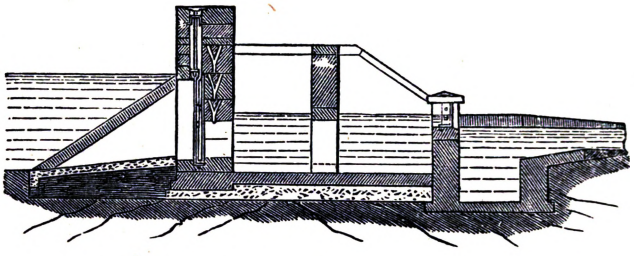

4628.

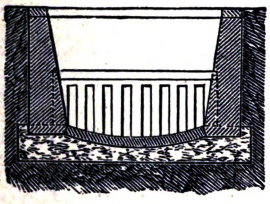

4629.

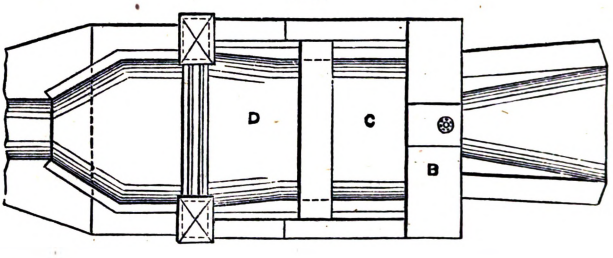

being discharged over a knife-edged iron weir. The water is admitted from the main canal by a sluice working in the division wall B. After entering from the canal, the water passes into the first chamber C, and from thence into the second chamber D, where the weir is fixed. The communication between the two chambers is made through narrow slits, and the water arrives at the weir without any perceptible velocity, and perfectly still. The weirs vary from 1 mètre to 2 mètres in breadth, according to the quantity of water required to be passed over. On the wall of the outer chamber is fixed a scale, with its zero point at the level of the weir edge, and by means of this scale any person can satisfy himself that the proper dotation of water is flowing into the distribution channel. By managing the sluice, the guard can regulate to a nicety the height of water to be passed over the weir. This module has several good points. The system of measurement is that which possesses the most fixed rules in hydraulics, and gives the most constant results; it is simple, and almost incapable of derangement; it will serve equally well for turbid waters as for clear

ones; it can take off the waters with the least possible loss of head, a most important point in canals such as the Esla, where the loss of a few feet of headway would prevent the irrigation of many thousand acres. The guard can see at a glance whether the proper amount of water is passing into the course, and the irrigators can satisfy themselves on the same point. The only reasonable objection to this module is that any sudden variation in the head of water in the canal will affect the discharge, which will continue to be greater or less than it ought to be according to circumstances, until the guard comes round again. This is undoubtedly true; and to meet this objection it was at one time proposed to use a movable weir suspended from floats working inside the pillars, which would rise and fall with the water, and preserve the crest of the weir at an invariable level below, Figs. 4630 to 4632. On reconsideration, however, it was determined not to put this in, as in most well-regulated canals there is never likely to be any perceptible variation in the head of water. There is generally a guard in charge of the head-works, whose special duty it is to see that a constant body of water is admitted into the canal. If the river is flooded, he must close the gates; if it diminishes, he must open them. The water taken off from the canal for the different water-courses is a fixed quantity, and that passed on to the lower portion is therefore likewise invariable. The only cause of a sudden change of head would be in the case of a sudden and heavy fall of rain; but to provide against this, at every two or three kilomètres there is a waste weir, which would immediately carry off the surplus waters; and even if a little more was discharged through the module for a short time, no inconvenience would result from this. On the whole, as a practical working module, that adopted for the Henares and the Esla canals is probably as good as can be wished for. Experiments are now being made to ascertain the proper coefficient for these weirs under varying heads.

4630.

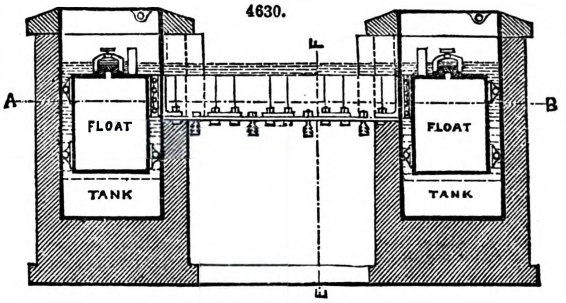

4631.

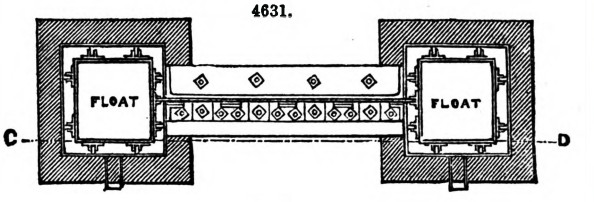

4632.

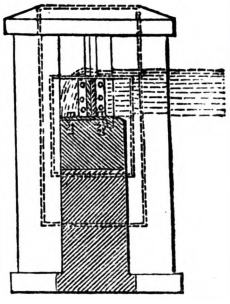

As regards the probable losses by filtration and evaporation, it is difficult to arrive at any reliable calculation. Ribera estimates, from experiments made on the Isabel II. Canal, that the total loss from both causes will be only 2 per cent. of the whole body of water carried. This appears low, but it must be borne in mind that the whole of this canal is to be lined with masonry. Nadault de Buffon gives the average percentage on canals as 15 per cent. of the total volume carried. He does not mention under what circumstances such a percentage may be expected. Now, it is quite evident that any estimate for filtration must be expressed in terms of the wetted border and depth or pressure of water, and no general rule can be arrived at that will apply to all kinds of canals. Experiments are being made on the Henares Canal to ascertain the loss by filtration in ordinary earth under varying depths, with a view to obtain more precise data. The evaporation in Madrid, according to the returns of the Royal Observatory for the year 1867, was as follows;—

	Inches.
January	1½
February	2
March	3
April	5¼
May	6¾
June	10¼
Carried over	28¾

	Inches.
Brought over	28¾
July	13½
August	11
September	6
October	3¾
November	1½
December	½
Total	65

The total amount of water evaporated from the Henares Canal during the month of July would be 99,042 cubic mètres, which would be equivalent to nearly ¾ per cent. on the total amount of water carried.

Another important point to the irrigation engineer is the principle to be followed in the distribution of the waters. Fig. 4633 represents a portion of the valley of the Henares now under irrigation. The system of distribution is shown by the dotted lines. It is divided into portions of about 300 or 350 hectares, say 750 to 850 acres, each of these plots being served by one of the primary channels, taken off direct from the main canal. On this primary channel at its point of departure from the main canal is fixed one of the modules before described, and by this module the dotation of water necessary for that area of ground is measured. Thus, for 300 hectares the dotation would be $300 \times \cdot 45 = 135$ litres a second. In cases where the water is distributed by

the company amongst a number of small proprietors, it is done in this way: the total amount of water is passed into each of the secondary channels, and irrigation begins on the plot at either end of the channel. By means of the company's survey and register, the acreage of every plot in the valley is known; it is only necessary therefore to calculate the number of minutes or hours the stream must run to give a certain quantity of water, and give the distributor his book with the names of the proprietors in their order and the hours that each must have the water. After the stream has run for the time allotted to it, it is shut off and turned on to the next field; and so on until all the fields depending on that secondary channel are irrigated. The stream is then shut off that secondary channel and turned on to the next in turn; and so on until all are irrigated, and the first is commenced again. In some instances the larger proprietors have wished to take into their own hands the distribution of the water upon their estates; and in these cases the module, Figs. 4634, 4635, has been used. Its mode of

4633.

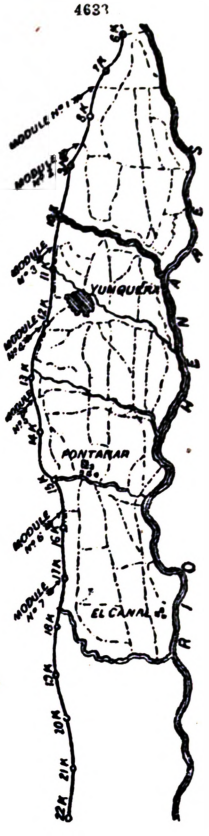

4634.

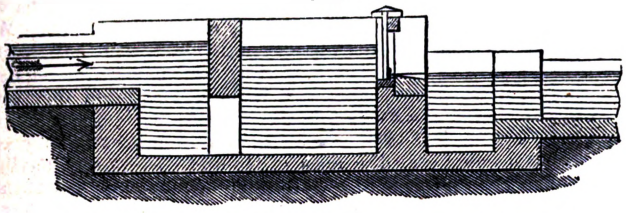

4635.

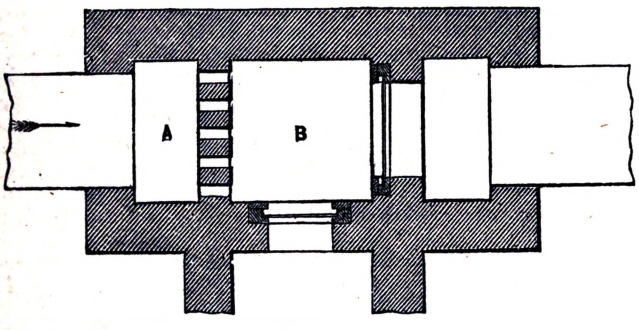

working is as follows;—Suppose the primary channel to be conveying 150 litres a second, and that one of the larger proprietors wishes for a dotation of 50 litres a second into his own channel. The water of the primary channel is passed into the chamber A, from whence it passes through divisions in the party-wall into B, where it arrives in a state of almost perfect stillness. This chamber has two openings—one which is a continuation of the main primary channel, and the other which leads to the secondary channel. These openings are provided with weirs of sheet iron, and over these the water discharges. It is only necessary to proportion the width of the weirs to the amount they have each to discharge, and as the head is the same for both, they will each discharge their proportionate parts. Thus, roughly speaking, in the case under consideration, the weir on the secondary channel would require to be one-half the width of that on the primary channel. See AQUEDUCT. BARRAGE. CANAL. LOCKS AND LOCK-GATES. WEIRS.

List of Books on Irrigation:—Keelhoff (J.), 'Traité Pratique de l'Irrigation des Prairies.' 2 vols., 8vo, Bruxelles, 1856. Moncrieff (C. C. Scott), 'Irrigation in Southern Europe,' 8vo, 1868. 'Memoria sobre el Reigo de los campos de Madrid con las Aguas del Rio Loxoya,' por Don Juan de Ribera, royal 8vo, Madrid, 1866. Roberts (J. P.), 'Irrigation in Spain,' 8vo, 1867. Parato (R.), 'Irrigation et Assainissement de Terres,' 4 vols., 12mo, and 4to Atlas, Paris, 1851. 'Madras Irrigation Reports,' folio, 1866 to 1872. Gibbs (J.), 'Cotton Cultivation,' crown 8vo, 1862. R. Baird Smith, 'Italian Irrigation,' 2 vols., 8vo, and Atlas in folio, 1855; 'Irrigation in the Madras Provinces,' 8vo, 1856. Nadault de Buffon, 'Des Canaux d'Irrigation de l'Italie Septentrionale,' 2 vols., 8vo, and Atlas in 4to, Paris, 1861. Maurice Aymard, 'Irrigations du Midi de l'Espagne,' 8vo and folio, Paris, 1864. See also Belidor, 'Architecture Hydraulique;' Sganzin, 'Cours de Construction;' Sir P. T. Cautley's 'Report on the Ganges Canal,' and numerous Papers in the Minutes of the Institution of Civil Engineers; 'L'Annals des Ponts et Chaussées,' and the 'Professional Papers on Indian Engineering,' edited by Col. Medley, R.E., Roorkee, 1863 to 1872.

ISOMORPHISM. FR., *Isomorphisme;* GER., *Isomorphismus.*

Certain substances possess the property of crystallizing in identical or nearly identical forms, and of giving, when they together assume the solid state, homogeneous crystals in which these substances are contained in any proportions. This property received from Mitscherlich the name of *isomorphism.*

The labours of Haüy had already shown that every substance susceptible of crystallization possesses a particular form distinct from those of all others; the only exception being the forms of the cubic type which Haüy considered as *limiting* forms beyond the influence of the general law. This proposition, in its geometrical rigour, remains true even now, for *isomorphous* substances, often showing the greatest similarity in the most minute particulars of their crystallization, are derived

from primitive forms, the angles of which are not identical, and which angles may differ by several degrees. But at the time when Mitscherlich made his important discovery, the crystalline forms of various substances chemically different were regarded as absolutely identical. It was supposed that these substances were compounds in which one of the components possessed such energy to crystallize that it impressed its own form upon all the others. Mitscherlich began by attributing to isomorphous substances angles absolutely equal. Wollaston, however, had shown by exact measurements that calcite, sidero-calcite, and dolomite do not possess the same angles. Mitscherlich's experiments, made upon the phosphates and arseniates, led him to the conclusion that it is not identity, but extreme similarity of form, and especially that physico-chemical property of crystallizing together in indefinite proportions, that constitutes isomorphism. Isomorphism, governed by analogies in properties and formula, that is, in constitution, is therefore above all a physical property. From this point of view especially it offers deep interest to the chemist, who many a time has been able to infer, from a reason dependent on isomorphism, a similarity of constitution, and not only to correct certain formulas, but to enrich science with new substances, such, for example, as the compounds of vanadium.

The researches of Mitscherlich had been preceded by a number of isolated observations which, one would think, ought to have attracted more notice from chemists and mineralogists. Werner had already pointed out the resemblance in form between pyromorphite and apatite. Leblanc had discovered that a solution of ferrous sulphate, to which sulphate of copper has been added, deposits crystals which, with the form of the sulphate of copper, contain variable and often very considerable quantities of sulphate of iron. A similar observation had been made by Beudant and others respecting the sulphates of iron and zinc. Vauquelin had shown that ammonia may replace potassa in any proportion in alum without changing the form of it; and Gay-Lussac, having suspended a crystal of alum of potassa in a solution saturated with alum of ammonia, saw it increase regularly as if it had been placed in its mother-lye. These facts remained isolated in science until Mitscherlich, profoundly struck with the idea that an identical crystalline form must correspond to a similar atomic grouping, studied from this point of view various series of salts. He soon discovered that the sulphates of the different metals of the magnesian series were capable of crystallizing with the same number of molecules of water and presenting similar forms, that they could combine with the sulphates of ammonia or potassa and give identical crystals, that the arseniates and the phosphates, corresponding to the sulphates, offered the same analogy of crystallization, and that in general the nature of the constituent atoms seems to have infinitely less influence upon the crystalline form than their grouping. Still he was obliged to attribute to the chemical nature of isomorphous substances the cause of the slight difference in angle, which an accurate measurement of the crystals compelled him to acknowledge. From the time of Mitscherlich's labours the notion of isomorphism became an exact one; and later researches have not modified it in any important degree.

A remarkable character of isomorphous substances has recently been discovered by Gernez. He has shown that a sursaturated solution crystallizes equally well when touched with a crystal of the substance dissolved or with an isomorphous crystal. Lecoq de Boisbaudran has even succeeded by this artifice in obtaining crystallized hydrates which do not form in the ordinary conditions of crystallization.

Certain natural and artificial crystallized substances have very nearly the same angles and great similarity of form, though belonging to two different types. Such are albite and felspar, the group of the mesotypes, augite and bronzite, augite and rhodonite, bitartrate of potassa and that of ammonia. Laurent was the first to regard these substances as isomorphous, and to this particular isomorphism he gave the name of *paramorphism*. This chemist remarked this curious fact, namely, that in two crystals of different but similar composition certain angles may correspond exactly with each other and present nearly the same value, whilst others are wholly different. These substances he calls *hemimorphous*. The most striking example of hemimorphism has been given by Pasteur. He noticed in all the orthorhombic, clinorhombic, and anorthic tartrates a prism of about 100°, surmounted by variable summits.

In certain cases we are compelled to admit isomorphism between substances that do not contain the same number of atoms, as, for example, the alums of ammonia and potassa, and most of the salts furnished by the alkalies and ammonia. The same thing happens, but more rarely, when we see two monatomic atoms play the part and hold the place of one diatomic atom; this is the polymeric isomorphism of Scherer, which seems real within the limits we have just pointed out, but which we can hardly admit as true to the extent given it by its author. According to him, 3 $Al_2 O_3$ might replace 2 $Si O_3$, and even 3 H O replace Mg O (old equivalents).

The following are the best known examples of isomorphism;—

Cubic Type;—

1.	Chloride of potassium	K Cl.
	„ of sodium	Na Cl
	„ of lithium	Li Cl.
	„ of ammonium	$N H_4$ Cl.
	„ of cæsium	Cs Cl.
	„ of rubidium	Rb Cl.
	„ of thallium	Tl Cl.
	Bromide of potassium	K Br.
	„ of sodium	Na Br.
	„ of ammonium	$N H_4$ Br.
	Iodide of potassium	K I.
	„ of sodium	Na I.
	„ of ammonium	$N H_4$ I.

Cyanide of potassium	KCN.
„ of ammonium	NH_4CN.
Fluoride of potassium	KFl.
„ of sodium	$NaFl$.
2. Sulphuret of lead	PbS.
Seleniuret of lead	$PbSe$.
3. Bisulphide of iron	FeS_2 (pyrites).
„ of manganese	MnS_2 (haüerite).
4. Oxide of magnesium	MgO.
„ of nickel	NiO.
5. The group of the spinelles;—	
Alumino-magnesian oxide	$MgAl_2O_4$ (spinelle).
„ ferrous oxide	$FeAl_2O_4$ (pleonaste).
„ zincic oxide	$ZnAl_2O_4$ (gahnite).
Ferrico-magnesian oxide	$MgFe_2O_4$ (magnoferrite).
„ zincic oxide	$ZnFe_2O_4$ (franklinite).
„ ferrous oxide	$FeFe_2O_4$ (magnetite).
Chromico-ferrous oxide	$FeCr_2O_4$ (chromite).
Oxide of titanium and iron	$TiFe_2O_4$ (iserine).
6. Nitrate of barium	$Ba(NO_3)^2$.
„ of strontium	$Sr(NO_3)^2$.
„ of lead	$Pb(NO_3)^2$.
7. Chlorate of sodium	$NaClO_3$.
Bromate of sodium	$NaBrO_3$.
Iodate of ammonium	NH_4IO_3.
8. Chlorate of nickel	$Ni(ClO_3)^2 + 6H_2O$.
„ of cobalt	$Co(ClO_3)^2 + 6H_2O$.
„ of copper	$Cu(ClO_3)^2 + 6H_2O$.
Bromate of magnesium	$Mg(BrO_3)^2 + 6H_2O$.
„ of zinc	$Zn(BrO_3)^2 + 6H_2O$.
„ of nickel	$Ni(BrO_3)^2 + 6H_2O$.
„ of cobalt	$Co(BrO_3)^2 + 6H_2O$.
9. The group of the garnets, as;—	
$CaAl_2Si_3O_{10}$ (grossular); $MgAl_2Si_3O_{10}$ (pyrope), &c., &c.	
10. Chloroplatinate of potassium	K_2PtCl_6.
„ of ammonium	$(NH_4)^2PtCl_6$.
Chloro-iridiate of potassium	K_2IrCl_6.
„ of ammonium	$(NH_4)^2IrCl_6$.
Chlorostannate of potassium	K_2SnCl_6.
„ of ammonium	$(NH_4)^2SnCl_6$.
Chloropalladate of potassium	K_2PdCl_6.
„ of ammonium	$(NH_4)PdCl_6$.
11. The group of the alums;—	
Alumino-ammonic	$Al_2(NH_4)^2(SO_4)^4 + 24H_2O$.
Alumino-potassic	$Al_2K_2(SO_4)^4 + 24H_2O$.
Alumino-lithic	$Al_2Li_2(SO_4)^4 + 24H_2O$.
Alumino-thallic	$Al_2Tl_2(SO_4)^4 + 24H_2O$.
Ferrico-potassic	$Fe_2K_2(SO_4)^4 + 24H_2O$.
Ferrico-ammonic	$Fe_2(NH_4)^2(SO_4) + 24H_2O$.
Manganico-potassic	$Mn_2K_2(SO_4)^4 + 24H_2O$.
Manganico-ammonic	$Mn_2(NH_4)^2(SO_4)^4 + 24H_2O$.
Chromico-potassic	$Cr_2K_2(SO_4)^4 + 24H_2O$.
Chromico-ammonic	$Cr_2(NH_4)^2(SO_4)^4 + 24H_2O$.

Quadratic Type;—

1. Stannic oxide	SnO_2.
Titanic oxide	TiO_2.
2. Sulphate of nickel	$NiSO_4 + 7H_2O$.
Seleniate of nickel	$NiSeO_4 + 7H_2O$.
„ of zinc	$ZnSeO_4 + 7H_2O$.
3. Phosphate of potassa	KH_2PO_4.
„ of ammonia	$NH_4H_2PO_4$.
Arseniate of potassa	KH_2AsO_4.
„ of ammonia	$NH_4H_2AsO_4$.
4. Ammoniacal sulphate of silver	$Ag_2SO_4 . 2NH_3$.
„ seleniate of silver	$Ag_2SeO_4 . 2NH_3$.
„ chromate of silver	$Ag_2CrO_4 . 2NH_3$.
5. Sulphate of copper	$CuSO_4 + 6H_2O$.
„ of magnesia	$MgSO_4 + 6H_2O$.
„ of zinc	$ZnSo_4 + 6H_2O$.
„ of nickel	$NiSO_4 + 6H_2O$.
6. Tungstate of lime	$CaWO_4$.
„ of lead	$PbWO_4$.
Molybdate of lead	$PbMoO_4$.

Orthorhombic Type ;—

1. Arsenious acid	As_2O_3.
Antimonious acid	Sb_2O_3.
2. Hydrate of alumina	$Al_2H_2O_4$.
Ferric hydrate	$Fe_2H_2O_4$.
Manganic hydrate	$Mn_2H_2O_4$.
3. Carbonate of lime	$CaCO_3$ (arragonite).
„ of barytes	$BaCO_3$.
„ of strontia	$SrCO_3$.
„ of lead	$PbSO_3$.
4. Sulphate of lime	$CaSO_4$.
„ of barytes	$BaSO_4$.
„ of strontia	$SrSO_4$.
„ of lead	$PbSO_4$.
5. Perchlorate of potassa	$KClO_4$.
„ of ammonia	NH_4ClO_4.
Permanganate of potassa	$KMnO_4$.
„ of ammonia	NH_4MnO_4.
6. Sulphate of soda	Na_2SO_4.
„ of silver	Ag_2SO_4.
Seleniate of soda	Na_2SeO_4.
„ of silver	Ag_2SeO_4.
7. Sulphate of potassa	K_2SO_4.
„ of ammonia	NH_4SO_4.
„ of thallium	Tl_2SO_4.
Seleniate of potassa	K_2SeO_4.
Chromate of potassa	K_2CrO_4.
Manganate of potassa	K_2MnO_4.
8. Sulphate of magnesia	$MgSO_4 + 7H_2O$.
„ of zinc	$ZnSO_4 + 7H_2O$.
„ of nickel	$NiSO_4 + 7H_2O$.
„ of iron	$FeSO_4 + 7H_2O$.
„ of cobalt	$CoSO_4 + 7H_2O$.
9. Sulphuret of antimony	Sb_2S_3.
„ of arsenic	As_2S_3.
10. Nitrate of potassa	KNO_3.
„ of ammonia	NH_4NO_3.
„ of silver	$AgNO_3$.
11. Phosphate of soda	$NaH_2PO_4 + H_2O$.
Arseniate of soda	$NaH_2AsO_4 + H_2O$.
12. Hydrophosphate of copper	$Cu_2(PO_4)OH$.
Hydroarseniate of copper	$Cu_2(AsO_4)OH$.
„ of zinc	$Zn_2(AsO_4)OH$.
13. Bitartrate of potassa	$C_4H_5KO_6$.
„ of thallium	$C_4H_5TlO_6$.
14. Sodico-potassic tartrate	$C_4H_4KNaO_6 + 4H_2O$.
Sodico-thallous tartrate	$C_4H_4TlNaO_6 + 4H_2O$.

Rhombohedral Type ;—

1. Arsenic.	
Antimony.	
Bismuth.	
2. Alumina	Al_2O_3 (corundum).
Ferric oxide	Fe_2O_3.
Ferrico-titanic oxide	$FeTiO_3$.
Chromic oxide	Cr_2O_3.
3. Carbonate of lime	$CaCO_3$ (calcite).
„ of magnesia	$MgCO_3$.
Dolomite	$Mg\frac{1}{2}Ca\frac{1}{2}CO_3$.
Carbonate of manganese	$MnCO_3$.
„ of zinc	$ZnCO_3$.
„ of iron	FCO_3.
4. Sulphuret of cadmium	CdS.
„ of zinc	ZnS.
5. Nitrate of soda	$NaNO_3$.
„ of potassa	KNO_3.
6. Hyposulphate of lime	$CaS_2O_6 + 4H_2O$.
„ of strontia	$SrS_2O_6 + 4H_2O$.
„ of lead	$PbS_2O_6 + 4H_2O$.
7. Chlorphosphate of lime	$Ca_5(PO_4)^3Cl$.
„ of strontia	$Sr_5(PO_4)^3Cl$.
„ of lead	$Pb_5(PO_4)^3Cl$.
8. Fluozirconate of nickel	$NiZrFl_6 + 6H_2O$.
Fluosilicate of nickel	$NiSiFl_6 + 6H_2O$.
Fluostannate of nickel	$NiSnFl_6 + 6H_2O$.
Fluozirconate of zinc	$ZnZrFl_6 + 6H_2O$.

Clinorhombic Type ;—

1.	Acid sulphate of potassa	$K H S O_4$.
	Acid seleniate of potassa	$K H Se O_4$.
2.	Sulphate of lime	$Ca S O_4 + 2 H_2 O$ (gypsum).
	Seleniate of lime	$Ca Se O_4 + 2 H_2 O$.
3.	Seleniate of magnesia	$Mg Se O_4 + 7 H_2 O$
	„ of cobalt	$Co Se O_4 + 7 H_2 O$.
4.	Sulphate of iron	$Fe S O_4 + 6 H_2 O$.
	„ of cobalt	$Co S O_4 + 6 H_2 O$.
	„ of manganese	$Mn S O_4 + 6 H_2 O$.
	Seleniate of cobalt	$Co Se O_4 + 6 H_2 O$.
5.	Double sulphates	$K_2 S O_4 + R S O_4 + 6 H_2 O$.
	Double sulphates	$(N H_4)^2 S O_4 + R S O_4 + 6 H_2 O$.
	With R = Ca, Ni, Co, Fe, Mn, Zn, Cu.	
	Zinco-thallous sulphate	$Tl_2 S O_4 + Zn S O_4 + 6 H_2 O$.
6.	Sulphate of soda	$Na_2 S O_4 + 10 H_2 O$.
	Seleniate of soda	$Na_2 Se O_4 + 10 H_2 O$.
	Chromate of soda	$Na_2 Cr O_4 + 10 H_2 O$.
7.	Phosphate of ammonia	$(N H_4)^2 H P O_4$.
	Arseniate of ammonia	$(N H_4)^2 H As O_4$.
8.	Fluostannate of copper	$Cu Sn Fl_6 + 4 H_2 O$.
	Fluosilicate of copper	$Cu Si Fl_6 + 4 H_2 O$.
	Fluotitanate of copper	$Cu Ti Fl_6 + 4 H_2 O$.
	Fluoxytungstate of copper	$Cu W Fl_4 O_2 + 4 H_2 O$.
9.	Fluoxyniobate of potassa	$K_3 H Nb O Fl_7$.
	Fluostannate of potassa	$K_3 H Sn Fl_8$.

Anorthic type ;—

1.	Sulphate of copper	$Cu S O_4 + 5 H_2 O$.
	„ of manganese	$Mn S O_4 + 5 H_2 O$.
	„ of iron	$Fe S O_4 + 5 H_2 O$.
	Seleniate of copper	$Cu Se O_4 + 5 H_2 O$.
	„ of manganese	$Mn Se O_4 + 5 H_2 O$.
2.	Bichromate of potassa	$K_2 Cr_2 O_7$.
	„ of silver	$Ag_2 Cr_2 O_7$.

JACK. Fr., *Cric à crémaillère ;* Ger., *Winde mit gezahnter Stange ;* Ital., *Cricco ;* Span., *Gato.*

The word *jack* is used in an engineering sense to designate a portable machine, variously constructed, for raising great weights through a small space, as by means of a pedestal or support, Figs. 3855 to 3857, in which works a screw, lever, rack and pinion, or some combination of simple mechanical powers; it is also generally applied to any appendage of a machine, rendering convenient service, as the vibrating levers of a stocking frame.

The *Hydraulic Lifting Jack*, Figs. 4636 to 4639, was introduced by James Tangye. It consists of an inverted hydraulic press A, the ram of which C forms the foot upon which the jack stands, and the pump G and reservoir of water F are fixed on the opposite end of the press-cylinder, and form the head of the jack. The ram C is of wrought

4636.

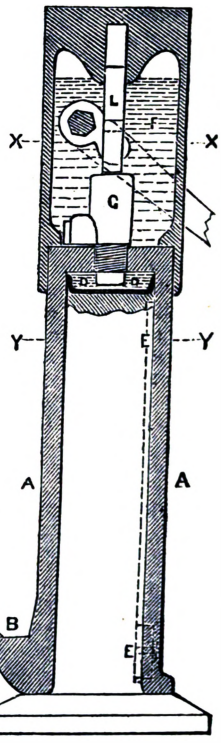

4637.

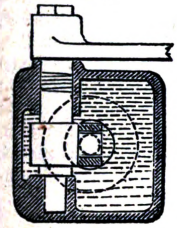

4639

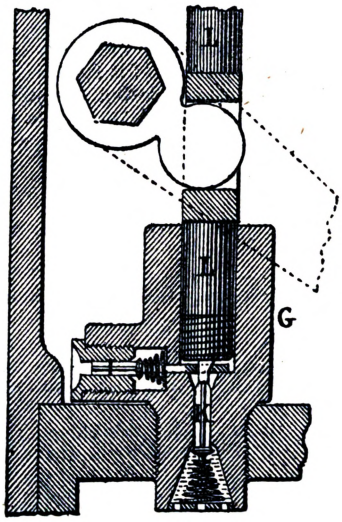

4638.

iron, 3½ in. diameter and 12 in. length of stroke, with the foot forged upon it; and the press-cylinder A is formed of a hammered wrought-iron bar, bored out of the solid, leaving ⅝ in. thickness

of metal for the sides of the cylinder. A claw B is forged on one side of the cylinder at the bottom, for the purpose of using the jack to lift from the bottom when required. The head F forming the reservoir of water is of malleable cast iron, fixed upon the top end of the cylinder by being bored out a tight fit and pressed on up to a shoulder.

The jack is lowered by means of a self-acting motion connected with the force-pump lever. The length of stroke of the lever is limited in ordinary working, by a stop-pin fixed on the side of the cistern, which catches the lever at the bottom of its stroke; but by shifting the lever $\frac{3}{8}$ in. outwards upon the squared end of the shaft, it is made to clear this stop-pin, and is pushed down into a lower position. The suction-valve I, Fig. 4639, is forced open by the same movement that presses open the delivery-valve K by means of a small inclined plane upon the prolonged end of the plunger L, which passes through an eye in the stalk of the suction-valve I, and draws back the valve from its seat directly after the delivery-valve K has been pressed open, allowing the water to flow back into the reservoir in the contrary direction to the ordinary working.

The ram of the jack is packed with a cupped leather D, shown black in Fig. 4636, resting in a hollow $\frac{3}{16}$ in. deep turned in the top of the ram. These leathers have been found successful in standing the pressure and wear, the same leathers having been in regular work for several years without requiring renewal. The force-pump plunger L in the lifting jack and also in the shears and punch is packed with a narrow strip of leather $\frac{3}{16}$ in. wide, coiled round spirally in a groove turned near the bottom of the plunger, as in Figs. 4636 and 4639, with the ends of the strip bevelled off to fill up the groove close.

The hydraulic jack in Fig. 4636 is for lifting 30 tons, and different sizes are made for weights from 4 to 60 tons. The head of the jack is prevented from turning round by a sliding block working in a longitudinal groove E in the ram; but by withdrawing the screw that fixes the block the head is allowed to turn freely with the load upon it. The hydraulic jack is convenient for use with heavy weights, from the great power obtained, one man being able to lift readily 30 tons and upwards; and from the lightness of construction, the 30-ton jack weighing about $1\frac{1}{2}$ cwt. At the same time the loss of power from friction is comparatively small; and the small extent of wear to which the working parts are subjected gives great durability and freedom from risk of derangement.

JACK-SCREW. Fr., *Vérin;* Ger., *Schraubenwinde.*

See Jack.

JACKET, STEAM. Fr., *Chemise du cylindre;* Ger., *Dampfmantel;* Ital., *Camicia.*

A jacket is an annular casing enveloping the cylinder of a steam-engine, and is filled with hot steam from the boiler, to prevent the liquefaction of the steam in the cylinder. That liquefaction does not, when it first takes place, directly constitute a waste of heat or of energy, for it is accompanied by a corresponding performance of work. It does, however, afterwards indirectly diminish the efficiency of the engine; for the water which becomes liquid in the cylinder, probably in the form of mist and spray, acts as a distributor of heat and equalizer of temperature, abstracting heat from the hot and dense steam during its admission into the cylinder, and communicating that heat of the cool and rarefied steam which is on the point of being discharged, thus lowering the initial pressure and increasing the final pressure of the steam, but lowering the initial pressure much more than the final pressure is increased, and so producing a less energy which cannot be estimated theoretically. Accordingly, in all cases in which steam is expanded to more than three or four times its initial volume, it has in practice been the custom to envelop the cylinder in a steam-jacket. The liquefaction which would otherwise have taken place in the cylinder, takes place in the jacket instead, where the presence of the liquid water produces no bad effect; and that water is returned to the boiler.

In double-cylinder engines it is usual to have steam-jackets round both cylinders; but in a few examples in which the smaller cylinder is jacketed, the liquefaction is found to be prevented, showing that the steam during its passage from the small into the large cylinder receives sufficient heat either directly from the small cylinder, or indirectly by conduction from the small to the large cylinder, to prevent any appreciable portion of it from condensing. It is desirable that a small quantity of the steam, not appreciable in calculating the efficiency of the engine, should be liquefied, in order to lubricate the packing of the piston. This generally does take place in jacketed engines, and is probably the effect of attraction between the particles of water and the metal.

Spite, however, of the above considerations, many engineers now consider the use of a steam-jacket a doubtful advantage.

See Boiler. Details of Engines, p. 1195.

JACQUARD LOOM. Fr., *Machine jacquarde;* Ger., *Jacquardmaschine;* Ital., *Telaio alla, Jacquard;* Span., *Telar de Jacquard.*

See Loom.

JENNY. Fr., *Machine à filer en fin, Jeannette;* Ger., *Feinspinnmaschine, Jenny;* Ital., *Mulinello da filare;* Span., *Máquina de hilar.*

See Cotton Machinery.

JETTY. Fr., *Jetée de port, Muelle;* Ger., *Kafendamm;* Ital., *Molo;* Span., *Muelle.*

An erection projecting into the sea, of the nature of a pier, with open spaces for the sea to play in, mostly constructed of timber. See Piers.

JOGGLE. Fr., *Entaille à crémaillère;* Ger., *Zahneinschnitt.*

A joggle is a joint between two bodies, so constructed by means of jogs or notches as to prevent their sliding past each other. See Joints.

JOINTS. Fr., *Joints;* Ger., *Stoss, Fuge;* Ital., *Guintura;* Span., *Juntas.*

The places or parts in which any two pieces of material meet are called joints, as the joints between two pieces of timber. Figs. 4640 to 4677 show various arrangements of joints used in joinery for panels, interior and exterior angles, and similar purposes.

Fig. 4640 is of a joint formed by planing the edges of a board perfectly true, and inserting

wooden or iron pins at intervals into the edge of both boards. The pin is called a dowel, and the joint is said to be doweled.

Fig. 4641, a joint formed by grooving and tonguing, or, as it is otherwise termed, grooving and feathering, ploughing and tonguing or feathering.

These two last joints are commonly used for floors. The first is used without the dowels in ordinary folded floors. The shrinking of the boards in this case causes the joint to open, and the air and dust to pass through. The grooved and tongued joint is used in the better kind of floors. The tongue or feather prevents the passage of air or dust.

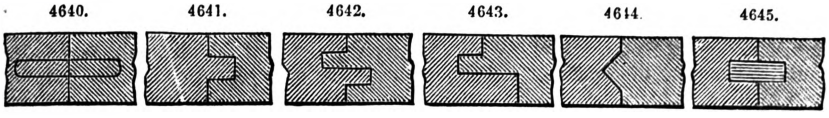

Fig. 4642, a double-tongued or feathered joint. Fig. 4643, a combination of a rebate with a groove and tongue. It affords in flooring a better means of nailing. In Fig. 4644 the groove and tongue are angular.

Fig. 4645, a kind of grooving and tonguing resorted to when the timber is thick, or when the tongue requires to be stronger than it would be if formed in the wood itself. In this mode of jointing corresponding grooves are formed in the edges of the boards, and the tongue or feather is formed of a slip of harder or stronger wood, called a slip-feather.

Figs. 4646 to 4648 are slip-feather joints. The feather in Fig. 4648 is wrought iron.

Fig. 4649 shows dovetail grooves, with a slip-feather of corresponding form, which must be inserted endways.

Fig. 4650 is a simple rebated joint. One-half of the thickness of each board is cut away to the same extent, and when the edges are lapped the surfaces lie in the same plane.

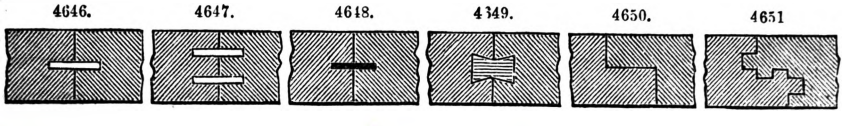

Fig. 4651, a complex mode of grooving and tonguing. The joint is in this case put together by sliding the one edge with its grooves and tongues endways into the corresponding projections and recesses of the other. The boards, when thus jointed together, cannot be drawn asunder laterally or to their surface without rending; but in the event of shrinking there is great risk of the wood being rent.

Where a great surface has to be covered with boarding not framed, the deals are cut into narrow widths, and jointed at their edges by some of the joints just described. Fig. 4641 shows the simple groove-and-tongue joint, which shrinkage of the wood will cause to open and disfigure the work. To prevent this disfigurement, a small moulding, termed a bead, is sometimes run on the edge of each board.

The joint thus forms one of the quirks of the bead, and prevents any slight opening being observed. This is termed a grooved tongued and beaded joint. So also in the case of the rebated joint, a bead is run on the edges of the board, and this is termed a rebated and beaded joint.

In joining angles formed by the meeting of two boards various joints are used, among which are;—

Fig. 4652, the mitre-joint, used in joining two boards at right angles to each other. Each edge is planed to an angle of 45°.

Fig. 4653, a mitre-joint keyed by a slip-feather.

Fig. 4654, a mitre-joint when the boards are of different thickness. The mitre on the thicker piece is only formed to the same extent as that on the edge of the thinner piece; hence there is a combination of the mitre and simple butt joint.

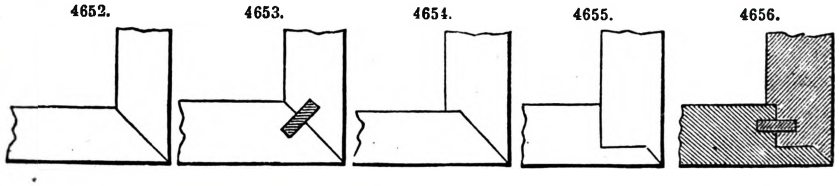

Fig. 4655 shows a different mode of joining two boards of either the same or different thicknesses. One of the boards is rebated, and only a small portion at the angle of each board is mitred. This joint may be nailed both ways.

In Fig. 4656 both boards are rebated, and a slip-feather is inserted as a key. This also may be nailed through from both faces.

Figs. 4657, 4658, are combinations of grooving and tonguing with the last described modes. These can be fitted with accuracy and joined with certainty.

Fig. 4659 is a joint formed by the combination of mitring with double grooving and tonguing, Fig. 4651. The boards must in this case be slipped together endways, and cannot be separated by a force applied at right angles to the planes of their surfaces.

In all these mitre-joints the faces of the boards meet at the angle, and the slight opening which

might be caused by shrinkage would be scarcely observable. In the butt-joints which follow, the face of the one board abuts against the face of the other, the edge of which is consequently in

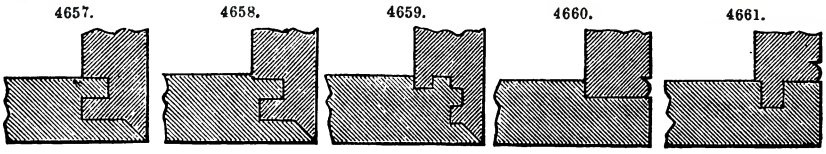

the plane of the surface of the first board, and the shrinkage of which would cause an opening at the joint. To make this opening less apparent, is the object of forming the bead-moulding, Figs. 4660 to 4664.

In Fig. 4660 the thicker board is rebated from the face, and a small bead formed on the external angle of the abutting board.

Fig. 4661, a groove is formed in the inner face of the one board and a tongue on the edge of the other.

Fig. 4662, the boards are grooved and tongued as in the last figure. A cavetto is run on the external angle of the abutting board, and the bead and a cavetto on the internal angle of the other board.

Fig. 4663, a quirked bead run on the edge of one board, and the edge of the abutting board forms the double quirk.

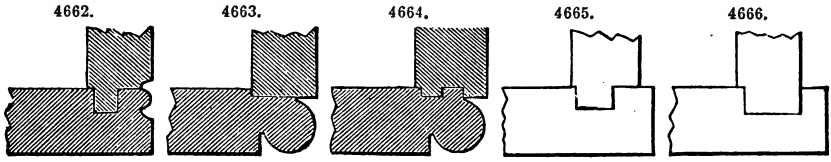

Fig. 4664, a double quirk bead is formed at the external angle, and the boards are grooved and tongued. The external bead is attended with this advantage, that it is not so liable to injure as the sharp arris.

In Figs. 4665, 4666, the joints used in putting together cisterns are shown. Figs. 4667, 4668, are joints for the same purpose. They are of the dovetail form, and require to be slipped together endways.

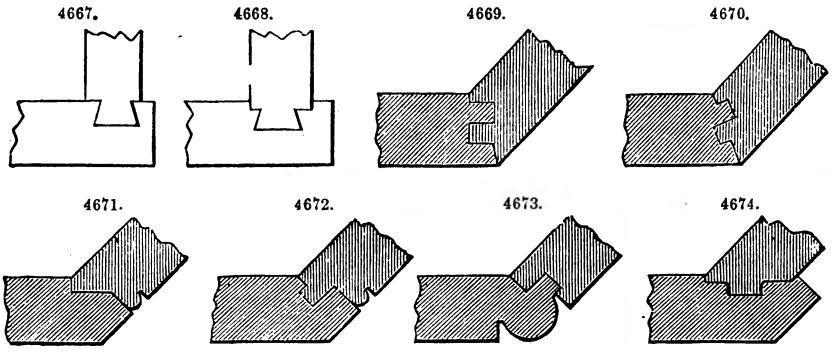

Figs. 4669 to 4674 show the same kind of joints as have been described, applied to the framing together of boards meeting in an obtuse angle.

Figs. 4675, 4676, show methods of joining boards together laterally by keys in the manner of scarfing; and Fig. 4677, another method of securing two pieces, such as those of a circular window fram-head by keys.

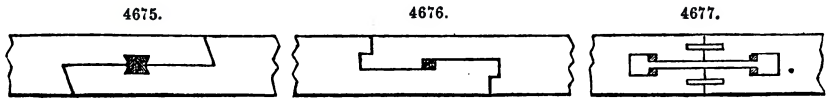

Dovetail Joint.—This joint has three varieties;—the common dovetail, where the dovetails are seen on each side of the angle alternately; the lapped dovetail, in which the dovetails are seen only on one side of the angle; and the lapped and mitred dovetail, in which the joint appears externally as a common mitre-joint. The lapped and mitred joint is useful in salient angles, in finished work, but it is not so strong as the common dovetail, and therefore in all re-entrant angles the latter should be used.

The three varieties of dovetail-joint above enumerated are illustrated in Figs. 4678 to 4691.

Fig. 4678 is an elevation; Fig. 4679 a view in perspective; and Fig. 4680 a plan of the

common dovetail-joint. In all the figures, the pins or dovetails of the one side are marked A, and those of the other side are marked B.

Lap-joint is represented in plan, elevation, and perspective projections, Figs. 4681 to 4683.

Figs. 4684 to 4686 are a plan, elevation, and perspective projection of the mitred dovetail-joint. The dovetails of the adjoining sides are marked respectively B and C in all the figures.

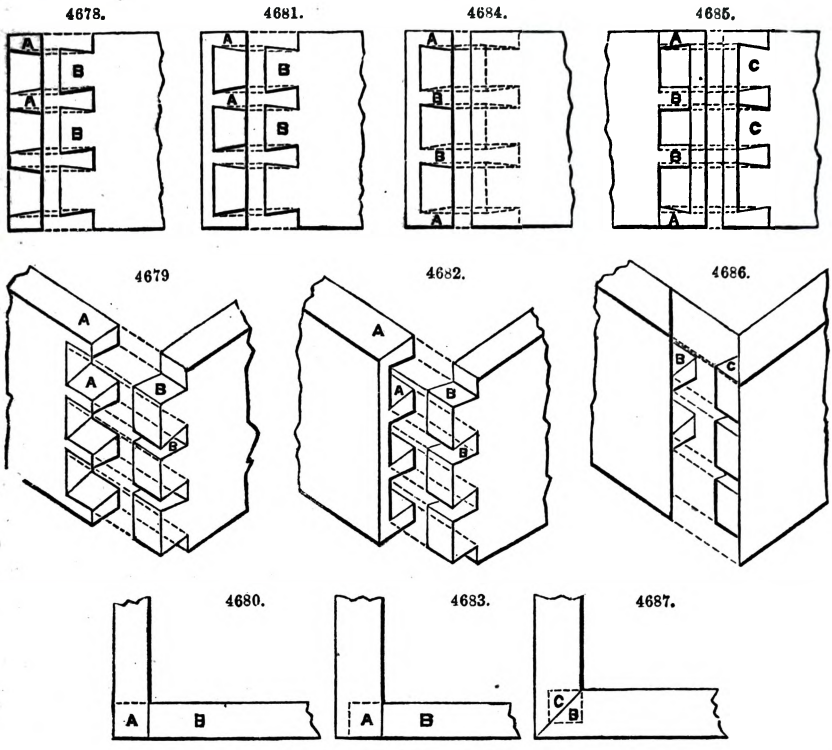

Figs. 4688 to 4691 show the modes of dovetailing an angle, when the sides are inclined to the horizon, as in a hopper. The pins of the one side are marked A, and those of the other side B.

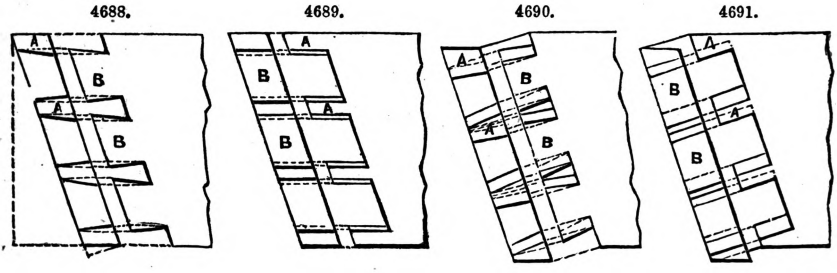

The meeting of two pieces of wood is called in carpentry the joint, which is circumscribed by the lines which mark the intersection of the faces of one piece with the other. The end of a piece of wood properly cut to be adjusted in contact with another piece is called its abutment. That a joint may be at the same time simple and easy of execution, it is necessary that the bearing faces should be planed of the same size and shape in relation to the planes of the axes. This can only take place when two faces of each piece are perpendicular to the same plane, and the other two faces parallel. This consideration will show that the two pieces of wood must necessarily be square.

When two pieces of wood are joined by the simple contact of the end of one piece with its bed on the other, they are said to abut or are joined by a plain-joint. This mode of joining does not prevent the one piece sliding on the other, unless it is fastened with nails or bolts.

The putting together of two pieces of wood may be effected in various ways—say that they meet and form an angle; then this mode has three cases;—

1. The end of one piece may bear upon a point in the length of the other. This case is the most frequent, and gives rise to the mortise-and-tenon joint, the joggle-joint, and to all those which are modifications of these two.

2. The two pieces can be joined mutually by their extremities under any angle whatever. This forms the angle-joint.

3. They may cross each other; and this result is the notch-joint.

Two pieces of wood may be joined in a right line by lapping and indenting the meeting ends on each other. This is called scarfing.

Two pieces of wood may be joined longitudinally end to end, the joint being secured by covering it on opposite sides by pieces of wood bolted to both beams. This process is termed fishing.

It is requisite to consider the joint as formed by two pieces only, because joints formed by more than two pieces can always be resolved into this.

The mortise-and-tenon joint is the principal of the greatest number of the other joints. It is necessary therefore to describe it first at length.

In the simplest case of tenon-and-mortise joint the two pieces of wood meet at right angles, Fig. 2069. The tenon is formed at the extremity of the upper piece in the direction of its fibres and parallel to its axis by two notches, which take from each side a parallelopipedon. The planes of the sides of the tenon are always parallel to the face of the upper piece and the other planes of the notch at right angles to it. The mortise is hollowed in the face of the lower piece, and is of exactly the same size and form as the tenon which therefore fills it. The two sides of the mortise which correspond to the breadth of the tenon should be parallel to the direction of the fibres of the wood. The sides of the mortise are called its cheeks; and the square parts of the timber from which the tenon projects, and which rest on the cheeks of the mortise, are called the shoulders of the tenon; and its springing from these is called its root. As the cheeks of the mortise and the tenon are exposed to the same amount of strain in a system of framing, it follows that each should be equal to one-third of the thickness of the timbers in which they are made. The length of the tenon should be equal to the depth of the mortise, so that its end should press home on the bottom of the mortise when its shoulders bear upon the cheeks; but as perfection in execution is not attainable, the tenon, in practice, is always made a very little shorter than the depth of the mortise, that its shoulders may come close.

When the mortise-and-tenon joint is cut, adjusted, and put together, the pieces are united by a key or treenail. The key is generally round, with a square head, and in diameter is always equal to a fourth part of the tenon. It is generally inserted at the distance of one-third of the length of the tenon from the shoulder; but a key should never be depended upon as a means of securing the joint, for the immobility of a system of framing should result from the balancing of the forces and the precision of the execution. A frame fixed definitely in its place should be stable and solid without the aid of keys, which are to be regarded as mere auxiliaries, useful during its construction.

If the endeavour is made to apply the same manner of forming the mortise and tenon when the timbers are not at right angles, but oblique, several disadvantages arise.

If there were no other inconveniences the impossibility of inserting the tenon in the mortise when the pieces form a portion of a system would preclude its adoption, as it would require to be thrust into the mortise in the direction of the arrow; but added to this there is the difficulty of working the mortise, and the tendency of the thrust of the tenon to rend the lower piece.

All these inconveniences are remedied in a very simple manner by truncating the tenon on the line *a f*, as shown in Fig. 4692, by a plane perpendicular to the axis of the mortise-piece. The execution is thus rendered easy and exact, the evil from the thrust of the tenon obviated, and the pieces can be put together by dropping the tenon-piece vertically into the mortise.

This is the simplest form of the mortise-and-tenon joint for oblique thrusts; but the only resistance offered to the sliding of the tenon-piece along the mortise-piece is offered by the strength of the tenon, which is quite insufficient in large carpentry works, and it is therefore necessary to modify the form so as to bring new bearing surfaces into action.

Fig. 4692 shows the joint formed by the meeting of a principal rafter and tie-beam, *c* being the tenon. The cheeks of th mortise are cut down to the line *d f*, so that an abutment *e d* is formed of

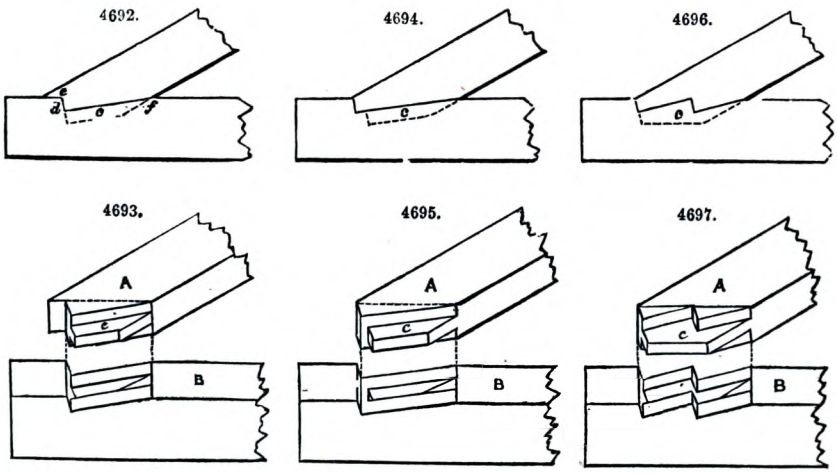

the whole width of the cheeks, in addition to that of the tenon; and the notch so formed is called a joggle. Fig. 4693 shows the parts detached and in perspective. It will be seen that a much larger bearing surface is thus obtained.

Fig. 4693 is a geometrical elevation of a joint, differing from the last by having the anterior part of the rafter truncated, and the shoulder of the tenon returned in front. It is represented in perspective in Fig. 4694.

Figs. 4696, 4697, show the geometrical elevation and perspective representation of an oblique joint, in which a double abutment, as *d e*, Figs. 4692, 4693, should be perpendicular, *d f*; and in execution the joint should be a little free at *f*, in order that it may not be thrown out at *d* by the settling of the framing. The double abutment is a questionable advantage; it increases the difficulty of execution, and of course the evils resulting from bad fitting. It is only allowable where the angle of meeting of the timbers is very acute, and the bearing surfaces are consequently very long.

Figs. 4698, 4699, show a means of obtaining resistance to sliding by inserting the piece *c* in notches formed in the rafter and the tie-beam; *d e* shows the mode of securing the joint by a bolt.

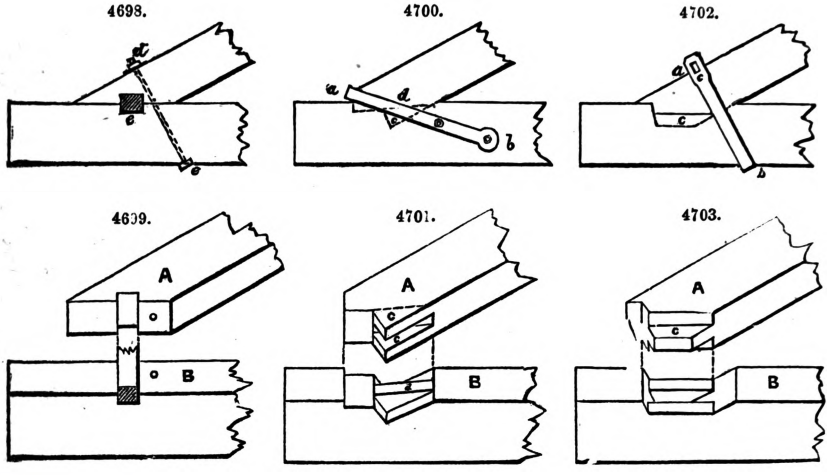

Figs. 4700, 4701, are of a very good form of joint, in which the place of the mortise is supplied by a groove *c* in the rafter, and the place of the tenon by a tongue *d* in the tie-beam. As the parts can be all seen they can be more accurately fitted, which is an advantage in heavy work. In Fig. 4700 the mode of securing the joint by a strap *a b* and bolts is shown.

Figs. 4702, 4703, are another mortise-joint, secured by a strap *a b* and cotter or wedge *a*.

Fig. 4704 shows the several joints which occur in framing the king-post into the tie-beam and the struts into the king-post. A is the tie-beam; B, the king-post; and *c* and D, struts. The joint at the bottom of the king-post has merely a short tenon *e* let into a mortise in the tie-beam. The abutment of the strut D is made square to the back of the strut, as far as width of the king-post admits; and a short tenon *f* is inserted into a mortise in the king-post. The abutment of the joint of *c* is formed as nearly square to the strut as possible.

The term king-post gives quite an erroneous notion of its function, which are those of a suspension-tie. Hence the necessity for the long strap *b a*, bolted at *d d*, secured by wedges at *c*, in the manner more distinctly shown by Fig. 4706.

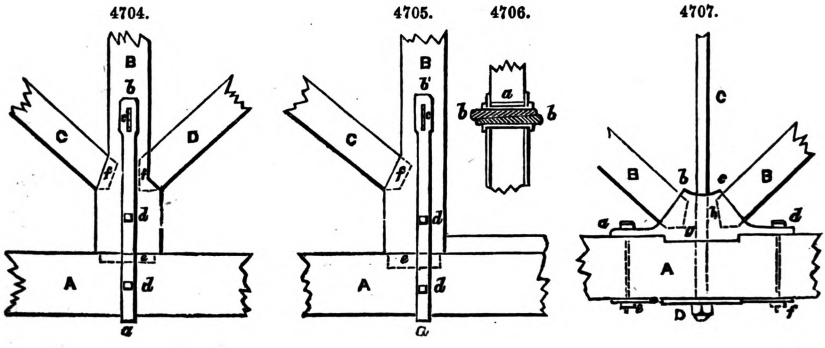

Fig. 4705 shows the queen-post. A is the tie-beam; B the post, tenoned at *e*; *c* the strut; and D the straining-piece; the strap, *b a*; and bolt, *d d*.

Fig. 4707. In this figure a superior construction is shown, in which a king-bolt of iron, C D, is substituted for the king-post. On the tie-beam *a* is bolted, by the bolts *a e d f*, the cast-iron plate and sockets *a b c d*, the inner parts of which, *h g*, *h g*, form solid abutments to the end of the struts B B. The king-bolt passes through a hole in the middle of the cast-iron socket-plate, and is secured below by the nut D. A bottom plate, *e f*, prevents the crushing of the fibres by the bolts.

Figs. 4708 to 4714 show various methods of framing the head of the rafters and king-posts by the aid of straps and bolts. Fig. 4715, the head of the rafters halved and bolted at their junction, and a plate laid over the apex to sustain the bolts which are substituted for the king-post. One bolt necessarily has a link formed in it for the other to pass through.

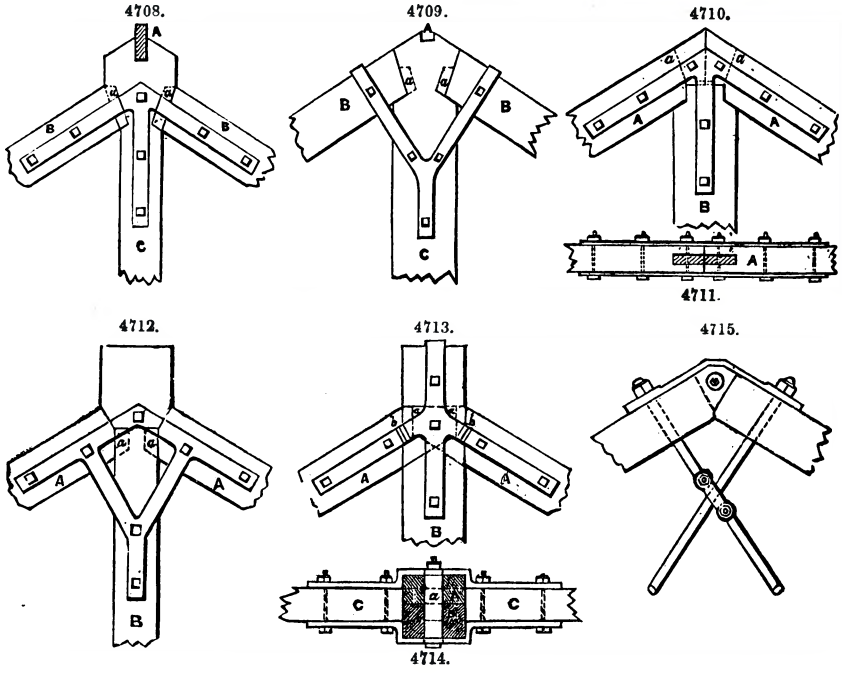

Fig. 4716 shows at D what may be considered the upper part of the same king-bolt, Fig. 4707, with the mode of connecting the rafters. A cast-iron socket-piece *c* receives the tenons *a a* of the rafters A A, and has a hole through it for the bolt, the head of which, *b*, is countersunk. B is the ridge-piece set in a shallow groove in the iron socket-piece. An elevation of the side is given, in which G is the bolt, F the socket-piece, and E the ridge-piece.

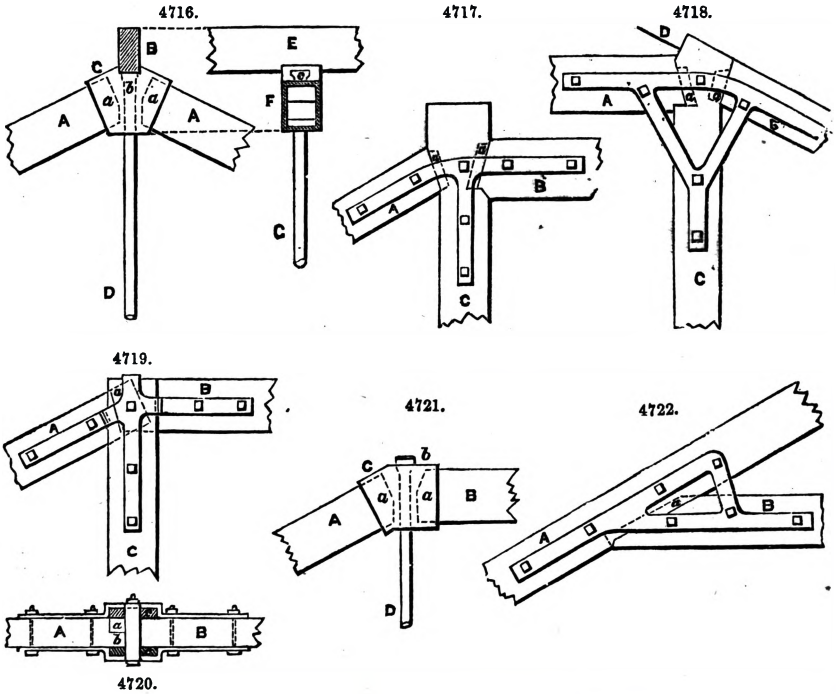

Figs. 4717 to 4721 illustrate the mode of framing together the principal rafter, queen-post, and straining-piece. In the first three examples the joints are secured by straps and bolts, and in the

last example the queen-bolt D passes through a cast-iron socket-piece *c* which receives the ends of the straining-piece and rafter, as those of the two rafters are received in Fig. 4716.

Figs. 4722, 4723, are modes of securing the junction of the collar-beam and rafters by straps; and Figs. 4724, 4725, modes of securing the junction of the strut and the rafter by straps.

4723. 4724. 4725.

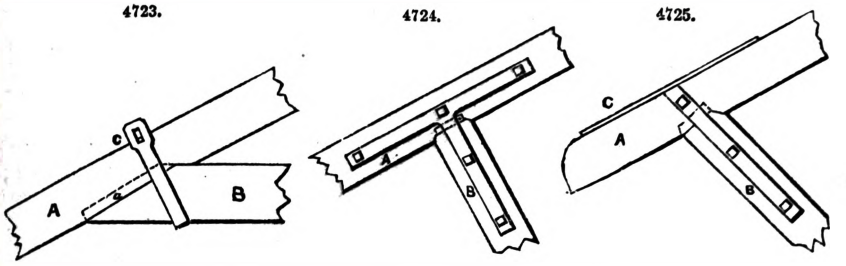

Lengthening Beams.—In large works in carpentry it is often necessary to join timbers in the direction of their length, in order to procure scantlings of sufficient longitudinal dimensions. When it is necessary to maintain the same depth and width in the lengthened beam, the mode of joining called scarfing is employed. Scarfing is performed in a variety of ways, dependent upon whether lengthened beam is to be subjected to a longitudinal or transverse strain. This method of joining is illustrated in Figs. 4726 to 4741.

In Fig. 4726 a part of the thickness is cut obliquely from the end of each piece, and being lapped over each other the joint is secured by bolts. In this case the joint depends entirely on the bolts. Iron plates are interposed between the nuts and the timber, to prevent the screwing up of the nuts injuring the beam.

4726. 4727. 4728.

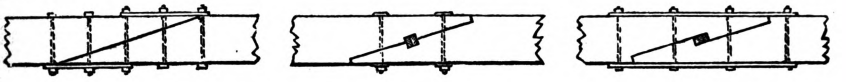

4729. 4730. 4731.

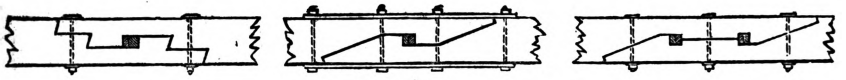

4732. 4733. 4734.

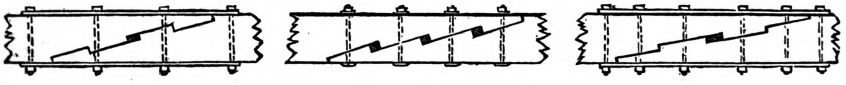

4735. 4738.

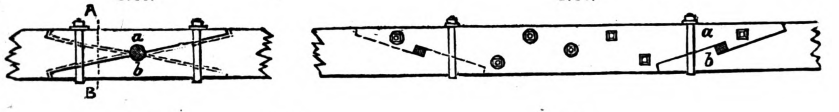

4736. 4737. 4739.

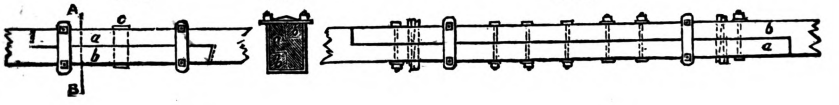

4740. 4741.

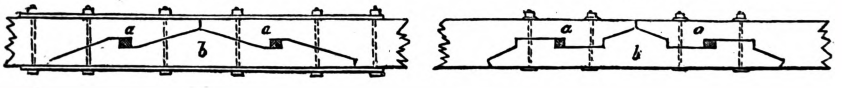

In Fig. 4727 a key is added in the middle of the joint, notched equally into both beams. In Fig. 4728 the joint is improved by its surface being indented on each joint and the key driven between. In this example continuous plates of iron are placed to prevent injury from the bolts. Figs. 4729 to 4734 are all variations of the last figure. In Fig. 4735 the beams are halved together vertically, as in Figs. 4736, 4737. They are keyed at the centre and secured by iron straps. In Figs. 4738, 4739, the joint is made much larger and halved; the end of each beam is scarfed and keyed, as in Fig. 4728; and the joint is secured by two straps and seven bolts. Fig. 4738 is the side, and Fig. 4739 the top of the beam.

Figs. 4740, 4741, are examples of scarfs formed by the interposition of a third piece *b*.

When the beam does not require to be of the same dimensions throughout, it is sometimes

lengthenen by the process termed fishing. The ends of the beams, *a a*, Fig. 4742, are abutted together, and a piece of timber, *b b*, is placed on each side, and secured by bolts and keys.

Fig. 4743 is an example of a fished beam, in which the fishing-pieces *b b* and timbers *a a* are tabled, and indented and keyed together.

4742.

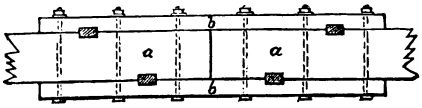

4743.

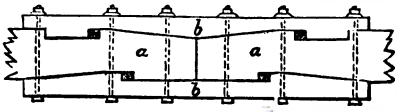

Dovetailing and Halving.—Fig. 4744 shows two pieces of timber joined together at right angles by a dovetailed notch. As to dovetails in general, it is necessary to remark that they should never be depended upon in carpentry for joints exposed to a strain, as a very small degree of shrinkage will allow the joint to draw considerably.

4744.

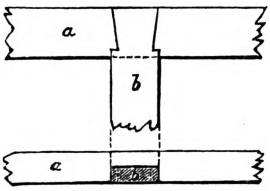

4745.

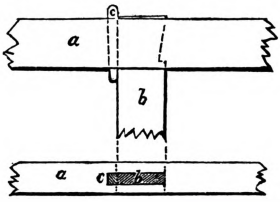

4746.

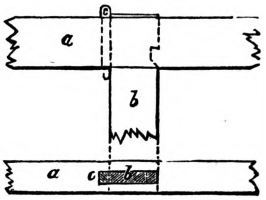

Figs. 4745, 4746, show modes of mortising wherein the tenon has one side dovetailed or notched, and the corresponding side of the mortise also dovetailed or notched. The mortise is made of sufficient width to admit the tenon, and the dovetailed or notched faces are brought in contact by driving home a wedge *c*. Of these, Fig. 4746 is the best.

Fig. 4747 shows the halving of the timbers crossing each other. Fig. 4748 a joint similar to those in Figs. 4745, 4746, but where the one timber *b* is oblique to the other *a*.

4747.

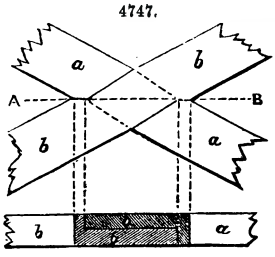

4748.

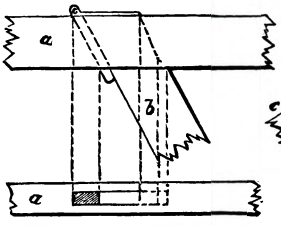

4749.

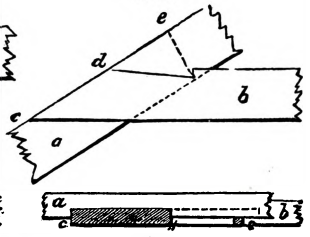

4750.

Figs. 4749, 4750, show the mode of notching a collar-beam tie into the side of a rafter by a dovetailed joint. The general remark as to dovetailed joints applies with especial force to this example.

Joints in Metal.—Figs. 4751 to 4774 indicate the methods of uniting the edges of metals after they have been cut and bent to meet in angles, curves, or plane surfaces.

Figs. 4751, 4752, are for the thinnest metals, which require a drop of soft solder on one or other side. Sheet-lead and tin are thus joined, and both are usually soldered from within.

Figs. 4753, 4754, are the mitre and butt joints used for thicker metals with hard solders. Sometimes Fig. 4754 is dovetailed together, the edges being filled to correspond coarsely; they are also partly riveted before being soldered from within. These joints are weak when united with soft solder.

4751. 4752. 753. 4754. 4755. 4756.

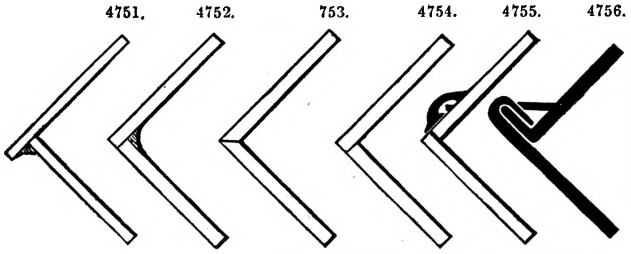

Fig. 4755, a lap-joint; the metal is creased over the hatchet-stake. Tin plate requires an external layer of solder; spelter solder runs the crevice, and need not project.

Fig. 4756 is folded by means of the hatchet-stake; the two are then hammered together, but require a touch of solder to prevent them from sliding asunder.

Fig. 4757, the folded angle-joint, used for cashboxes, and other strong works in which solder

would be inadmissible. It is common in tin and copper works, but less so in iron and zinc, which do not bend so readily.

Fig. 4758, a riveted joint, which is commonly used in strong iron-plate and copper works, as in boilers. Generally a rivet is inserted at each end, then the other holes are punched through the two thicknesses with a punch, on a block of lead. The head of the rivet is put within, the metal is flattened around it by placing the small hole of a riveting set, over the pin of the rivet, and giving a blow; the rivet is then clinched, and it is finished to a circular form by the concave hollow in another riveting set. When the works cannot be laid upon an anvil or stake, a heavy hammer is held against the head of the rivet to receive the blow; in larger works machine tools are used for riveting.

Figs. 4759, 4760, the plates *a a* are punched with long mortises, then *b b* are formed into tenons, which are inserted and riveted; but in Fig. 4760 the tenons have transverse keys to enable the parts to be separated.

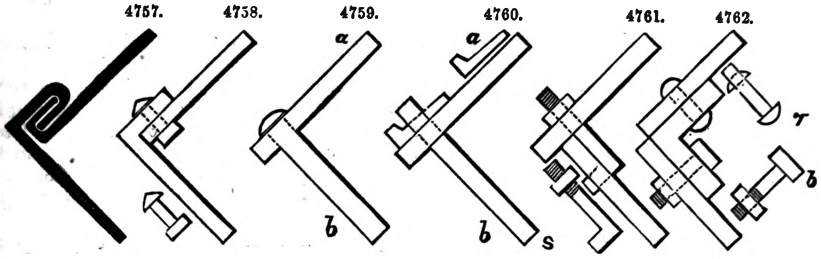

Fig. 4761, the one plate makes a butt-joint with the other, and is fixed by L-formed rivets or screw-bolts *s*; the short ends are generally riveted to the one plate, even when screwed nuts are used. This joint is very common in stovework.

Fig. 4762 is the mode universally adopted for very strong vessels, as for steam-boilers, in which the detached wrought-iron plates are connected by angle-iron. The rivet-holes are punched or drilled. The rivet *r* is made red hot, handed to the workman within the boiler, who drives it in the hole; he then holds a heavy hammer against its head, whilst two operators clench it up from without; between the hammering and the contracting of the metal in cooling the edges are brought together into intimate and powerful contact. Bolts and nuts, *b*, may be used to allow the removal of any part, as the man-hole of the boiler.

For the curved parts of the boilers the angle-iron is bent into corresponding sweeps, and for the corners of square boilers the angle-iron is welded together to form the three tails for the respective angles or edges which constitute the solid corner.

When several plates are required to be joined together to extend their dimensions, or the edges of one plate are united as in forming a tube, the joints are arranged as in Figs. 4763 to 4773, similarly to those for angles, but from which they differ in several respects.

Fig. 4763 is the lap-joint, employed with solder for tin plates, sheet lead, and for tubes bent up in these materials.

Fig. 4764, the butt-joint, used for plates and small tubes of the various metals. United with the hard solders they are moderately strong, but with tin solder the junctions are very weak from the limited measures of the surfaces.

Fig. 4765 is the cramp-joint. The edges are thinned with the hammer, the one is left plain, the other is notched obliquely with shears from $\frac{1}{8}$ to $\frac{3}{8}$ of an inch deep; each alternate cramp is bent up, the others down, for the insertion of the plain edge; they are next hammered together and brazed, after which they may be made nearly flat by the hammer, and quite so by the file. The cramp-joint is used for thin works requiring strength, and, amongst others, for the parts of musical instruments. Sometimes Fig. 4763 is feather-edged: this improves it, but it is still inferior to the cramp-joint in strength.

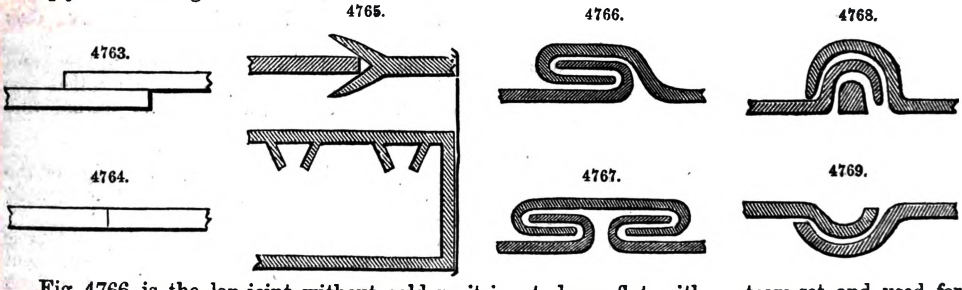

Fig. 4766 is the lap-joint without solder; it is set down flat with a steam-set, and used for smoke-pipes and other arrangements not required to be steam or water tight.

Fig. 4767 is used for zinc works; it saves the double bend of Fig. 4766.

Fig. 4768, the roll-joint employed for lead roofs. The metal is folded over a wooden rib, and requires no solder; the water will not pass through this joint until it exceeds the elevation of the wood. The roll-joint is less bent when used for zinc, as that material is rather brittle; the laps merely extend up the straight sides of the wooden roll, and their edges are covered by a half-round strip of zinc nailed to the wood.

Fig. 4769, a hollow crease used for vessels and chambers for making sulphuric acid; the metal

is scraped perfectly clean, filled with lead heated nearly to redness, and the whole are united by burning, with an iron heated also to redness. This method is, however, nearly superseded by the mode of autogenous soldering.

Figs 4770, 4771, are commonly employed either with rivets or screw-bolts; the latter joint is common in boilers, both of copper and iron, and also in tubes. Copper works are frequently tinned all over the rivets and joints, to stop any minute fissures. Fig. 4770 is the flange-joint for pipes.

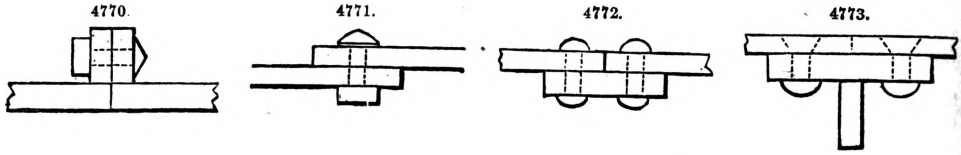

Fig. 4772, with rivets, is a common mode of uniting plates of marine boilers, and other works required to be flush externally.

Fig. 4773, a mode of constructing the largest iron steam-ships. The ribs of the vessels are made of T-iron, varying from about 4 to 8 in. wide, which is bent to the curve by the employment of very large surface-plates cast full of holes, upon which the wood model of the rib is laid down, and a chalk mark is made around its edge. Dogs or pins are wedged at short intervals in all those holes which intersect the curve; the rib, heated to redness in a reverberatory furnace, is wedged fast at one end, and bent round the pins by sets and sledge-hammers, and as it grows or yields to the curve, every part is secured by wedges until the whole is completed.

Fig. 4774 is a bayonet-joint. On turning the part A it is released from the L-shaped slot in the socket B, when it can be withdrawn.

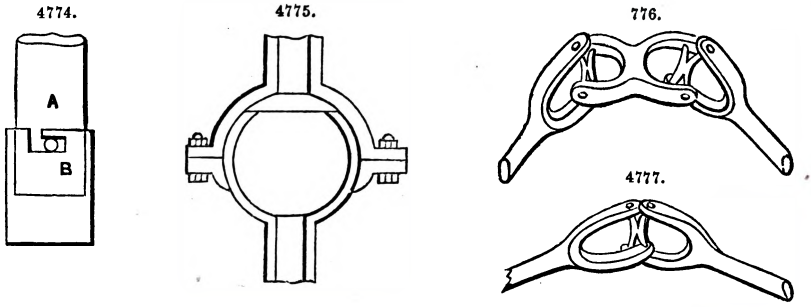

Fig. 4775, a ball-and-socket joint arranged for tubing. Figs. 4776, 4777, two kinds of universal joints.

See CONSTRUCTION. HAND-TOOLS. MACHINE TOOLS.

JOINTS, RIVETED. FR., *Joints rivés;* GER., *Vernieteter Stoss;* ITAL., *Guintura ribadita;* SPAN., *Juntas con roblones.*

See CORROSION. IRON SHIPBUILDING. JOINTS. RIVETING.

JOISTS. FR., *Poutrelle;* GER., *Kleine Balken;* ITAL., *Trave;* SPAN., *Viguetas.*

Joists are small pieces of timber resting on the wall or the girders in a house, and to which the boards of a floor or the laths of a ceiling are nailed. See CONSTRUCTION.

JOURNAL. FR., *Tourillon;* GER., *Drehzapfen.*

The short cylindrical portion of a shaft or other revolving piece, which turns in some other piece, or in a support called a *journal*-box; a bearing. See AXLE.

JOURNAL-BOX. FR., *Boîte de tourillon;* GER., *Zapfenlager;* ITAL., *Bronzina;* SPAN., *Caja donde gira un eje.*

The journal-box is that part of a machine in which the journal of a shaft, axle, or pin bears and moves, strictly a box in two or more parts, so that it can be opened and adjusted; called also simply box. When there is a separate piece enclosed by the box and bearing on the journal, this piece is termed a brass. See JOURNAL.

KEELS AND COAL SHIPPING.

In the early days of English coal shipping, the coals were brought down to the edge of the river in wagons, and there put into keels, which were broad, flat-bottomed barges, each containing a keel of coals, or 8 Newcastle chaldrons = 21 tons 4 cwt.

On the river Tyne there were many collieries having communication by railways to shipping places, where vessels could load, as in the case of the Walls-End Colliery. The mode of shipment was by spouts, in their general principles similar to those adopted by T. E. Harrison at the Tyne Docks, but without, for a long time, any arrangement for meeting the difference in the level of the tide and in the size of the vessel. When keels were used, the coals were brought down in them to where the vessel lay in the river, and they were then cast into the vessel through the porthole by the keelmen.

The first innovation on the spout system took place in the year 1812, when a coal-drop was erected on the river Tyne by Benjamin Thompson, and further improved by him in 1813. The principle of this mode of shipping coals was the invention of W. Chapman, but the credit of bringing the system into practical operation is due to Thompson. The drops, Figs. 4778, 4779, as erected by

him in 1813, have been generally followed, with various modifications. The principle of all these drops is, that the loaded wagon in its descent raises a counterbalance weight; and when the coals

4778.

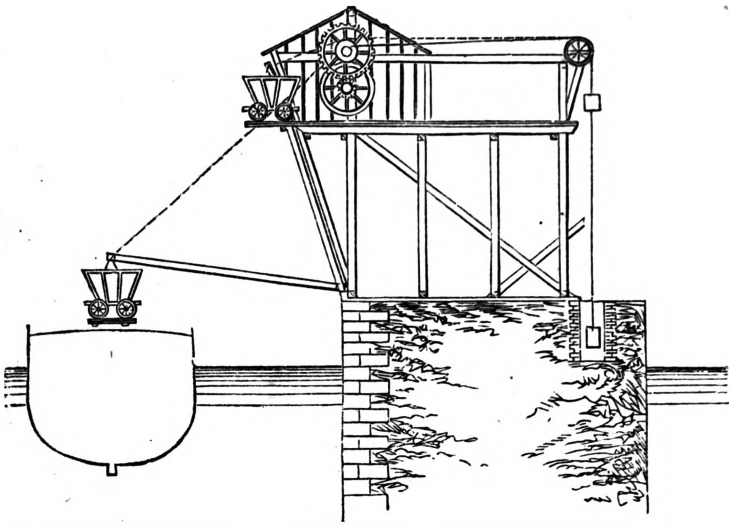

4779.

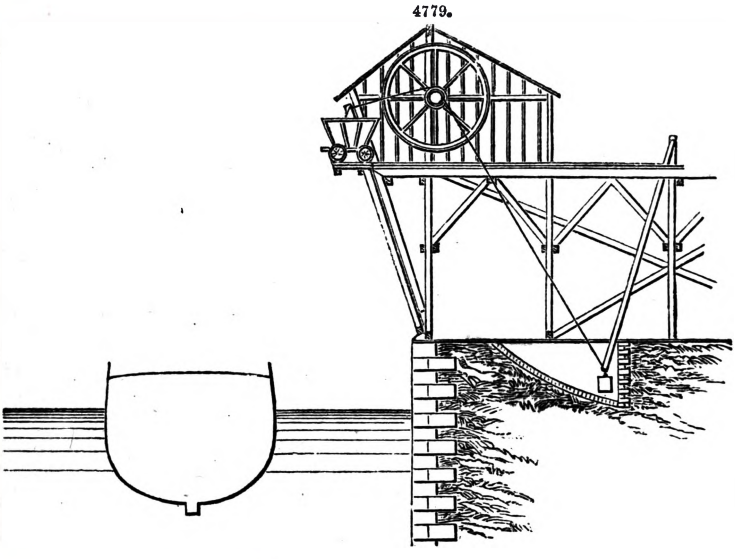

are let out of the wagon, the counterbalance weight brings the wagon back to its previous position, the whole being under the control of powerful brakes.

The first change on the keel system took place on the river Wear in the year 1817, when, in order to avoid the breakage to which the coals were subject by trans-shipment, first to the keel and then from the keel to the ship, a system of tubs, Figs. 4780, 4781, fitted into the keels, was invented by W. Bell. The chaldron wagons were lowered immediately over the keel, and then dropped into the tubs; the tubs were then conveyed in the keels, and transferred by the machinery to the vessel.

Figs. 4786, 4787, are a combination of both Bell and Thompson's plans, the system of tubs and the counterweight being both retained. Another system, Fig. 4782, which is still at work, was introduced in Sunderland about the same time.

In the year 1822, a private line of railway was made to Sunderland for the collieries, since the property of the Earl of Durham. The coals were there loaded direct into the ships by drops, Fig. 4783. These were the first drops erected on the river Wear. Figs. 4784, 4785, are a modification of this plan, which is very generally used.

In determining the system to be adopted in the Tyne Docks, the question lay between drops, by which the wagon would be lowered directly on to the deck of the vessel, and a system of spouts, with more perfect appliances for preventing the breakage of the coals. After mature deliberation, watching carefully the best-constructed spouts, and considering not only what existed, but what might be done, T. E. Harrison, the Engineer to the Docks, decided to adopt the system of shipping by spouts.

4780.

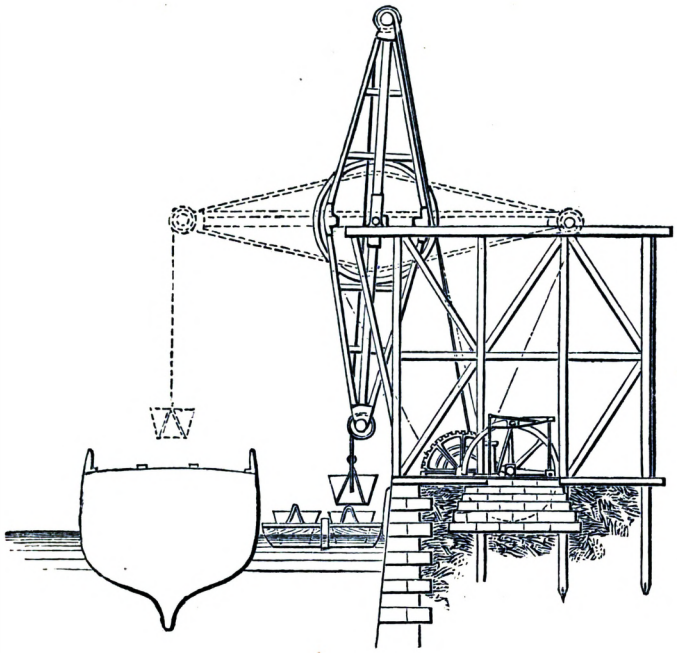

4781.

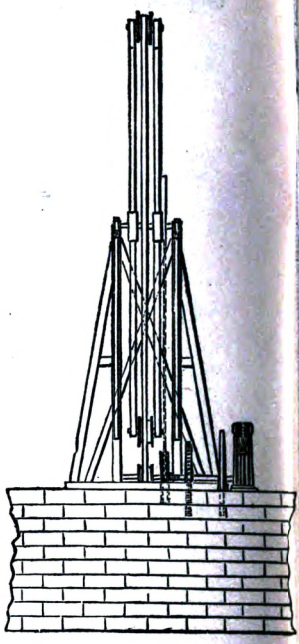

4782.

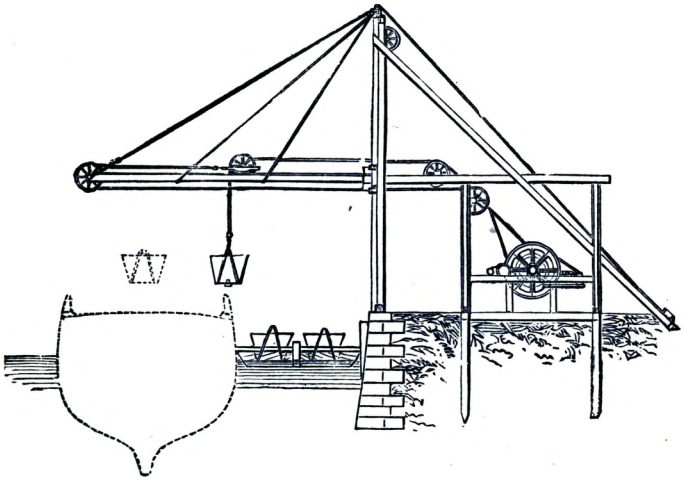

4783.

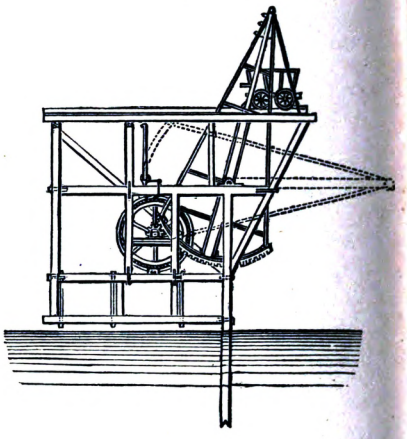

4784.

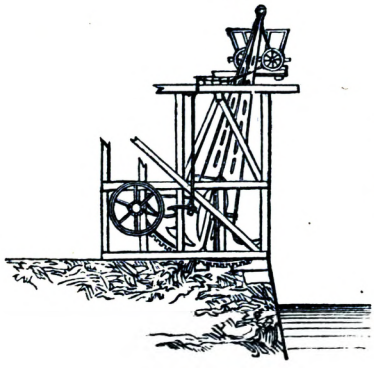

4786.

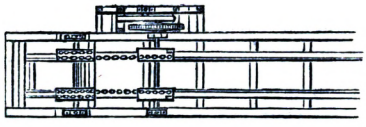

4785.

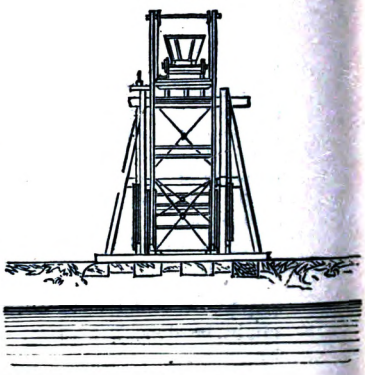

The arrangement of the spouts, and the mode of adjusting them to the level of the vessels, are shown in Figs. 4788, 4789. The variation in the level of the deck of a large ship when light, and at high water of a spring tide, and in the level of the deck of a small vessel, loaded, at a neap tide, is 20 ft., and it was necessary to provide for this difference.

In arranging the inclination of the spouts, it was essential to ascertain the angle at which the coals would slide on smooth iron plates without rolling. This was tested under a great variety of circumstances, and with every description of coal, when it was found that an angle of 50° would meet every circumstance. In order to allow for the varying level of the ship's

4787.

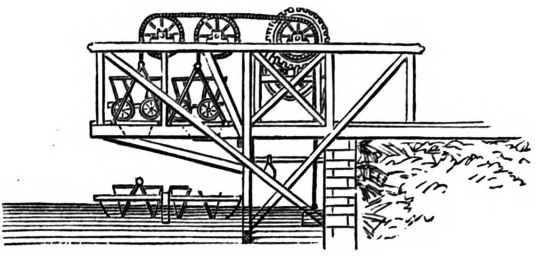

4788

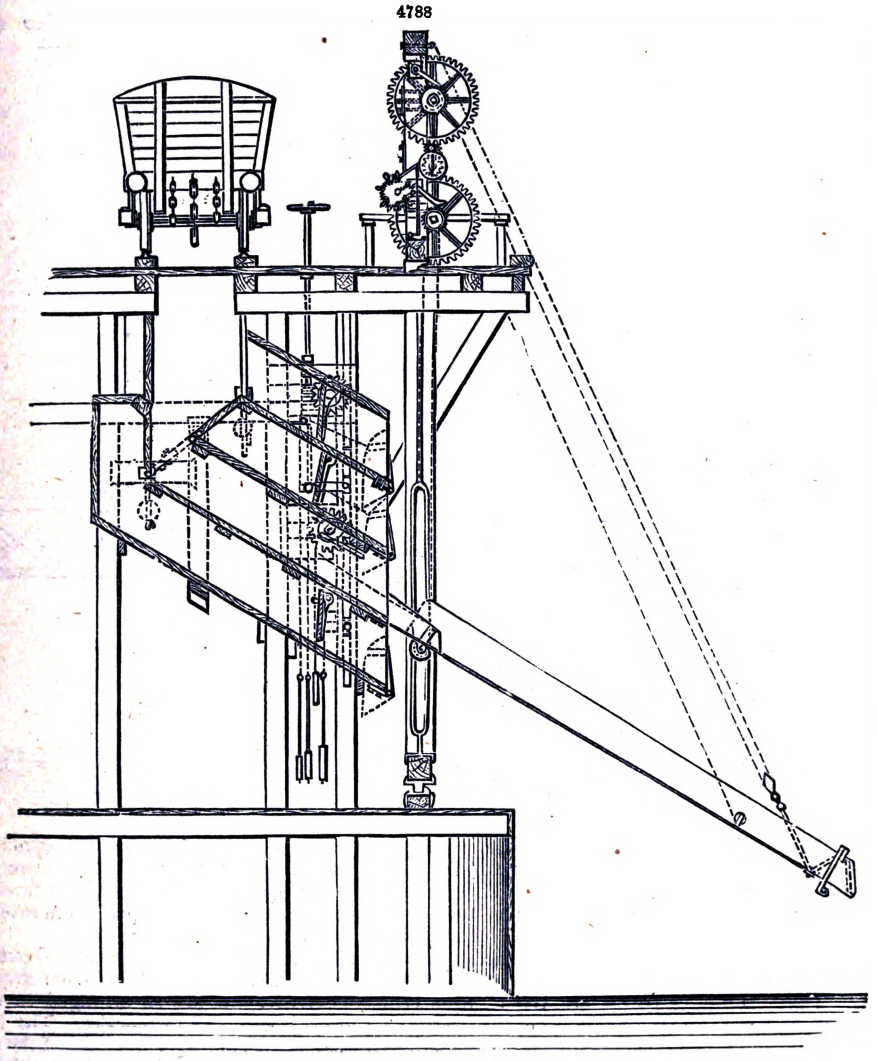

deck, arrangements are made to deliver the coals at four different levels. The difference of level not provided for is made up by giving a greater or less inclination to the spout. For a very large vessel, a special drop is erected at the end; the wagons are brought immediately over a large hopper, sufficiently long for three chaldron wagons, or two 8-ton wagons, to be emptied at once. The coals are directed into any one of these divisions by the opening or shutting of trap-doors turning on hinges and well balanced, so as to be easily moved; the spout is also raised or lowered in guides, and is worked by winches, the men standing on the level at which they work when shipping coals. Traps are provided for regulating the descent of the coals into the ship. In some cases the spouts are made to slide in a frame turning on a pivot, the object being to give a greater range into the ship's hold, particularly with screw colliers, and thus to avoid the necessity of moving the ships. This part of

the arrangement has proved to be very useful. The moving of the spout having been found to be rather a heavy lift for the men, this is now in course of being remedied by the addition of counterbalance weights.

In practical working, when shipping coals, the plan adopted is to keep the spout as nearly full

4789

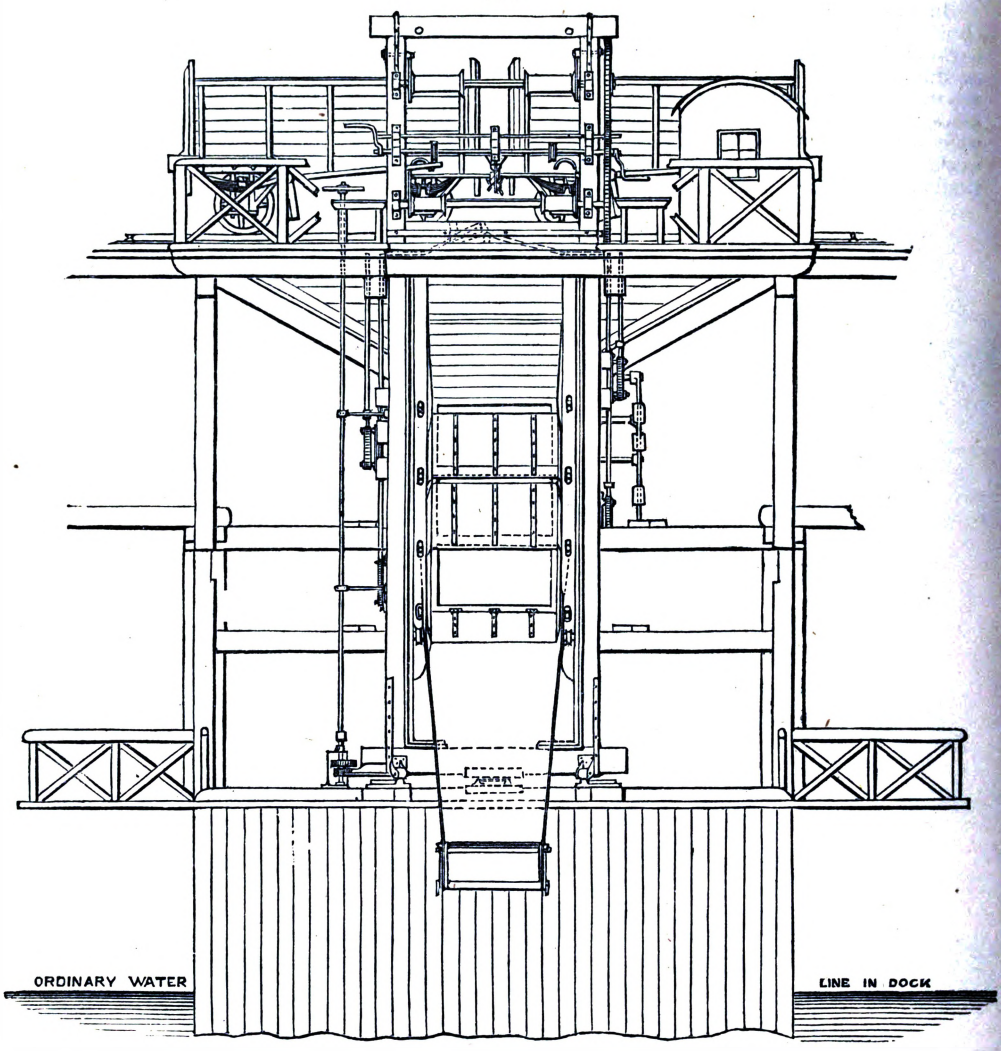

as possible, merely letting the coals slide sufficiently down to allow of the next wagon being teamed; so that though in the first filling of the spout, or on altering the level of the spout, the coals have a few feet to fall, yet this only applies to a small quantity of coal. Afterwards the whole mass descends slowly, and no further breakage takes place. When these points are carefully attended to, as little breakage takes place by this system as by any other.

The jetties on which these shipping places are erected, Figs. 4790 to 4793, are carried out into the dock at the end next to the standage-ground for coals. Each shipping jetty has ten shipping places. These shipping places are 100 ft. from centre to centre, and are so arranged that the vessels overlap each other. This plan has been found to work very well in practice. The lower portion of the timberwork of the jetties is thoroughly creosoted. That above the level of the quay is kyanized. No timber is used in any situation about the dock works which is not either creosoted or kyanized.

In making these different arrangements, the saving of manual labour has been a primary consideration, and gravity has been called into operation to the utmost possible extent. The plan and section of the standage-ground, Figs. 4794, 4795, show the general arrangements, and afford a good idea of the mode by which the working is carried on. The sidings from A to B are those into which the locomotive engines bring their wagons. and are on an inclination of 1 in 132. From these sidings the wagons are sorted by gravity into one or other of the fourteen sidings between B D. The two centre lines are reserved as travelling lines for coals going directly on arrival to the jetty for shipment. This sorting, from the point where the locomotive leaves the

wagons, into the different sidings, is for each jetty attended to by two operatives, one of them also attending to the switches. These general sidings are all on an inclination of 1 in 132, and at the switches and curves of 1 in 66. When the wagons are wanted for shipment, they are brought out of the sidings, and descend by gravity under the charge of men, who deposit them as near as possible to the spout. In order that coals from any one siding may go to any one spout, all the lines from these sidings are brought into one line at E, Figs. 4794, 4795, at which point they pass over a weighing machine. When passing over this machine, at a rate not exceeding two miles an hour, the weights are easily taken. Immediately after passing over the weighing machine, the lines branch out to the various spouts, and the wagons are directed into their proper roads by switches, the working of which is attended to by a man. The handles for working the switches are all brought to one focus, at the weighing machine, by means of rods. There is a considerable amount of standage provided for each spout, the standage being on inclinations varying from 1 in 132 to 1 in 100. Where the wagons descend from this standage to the spouts, the inclination varies from 1 in 20 to 1 in 87. The principle on which these shipping jetties are constructed is, that all the wagons are emptied, and are then returned along two lines, one on each side of the jetty. These lines are on an inclination of 1 in 100. The impetus of the loaded wagons in descending, carries them up this gradient, to or beyond the places where they are to be emptied; and when emptied, gravity takes them away.

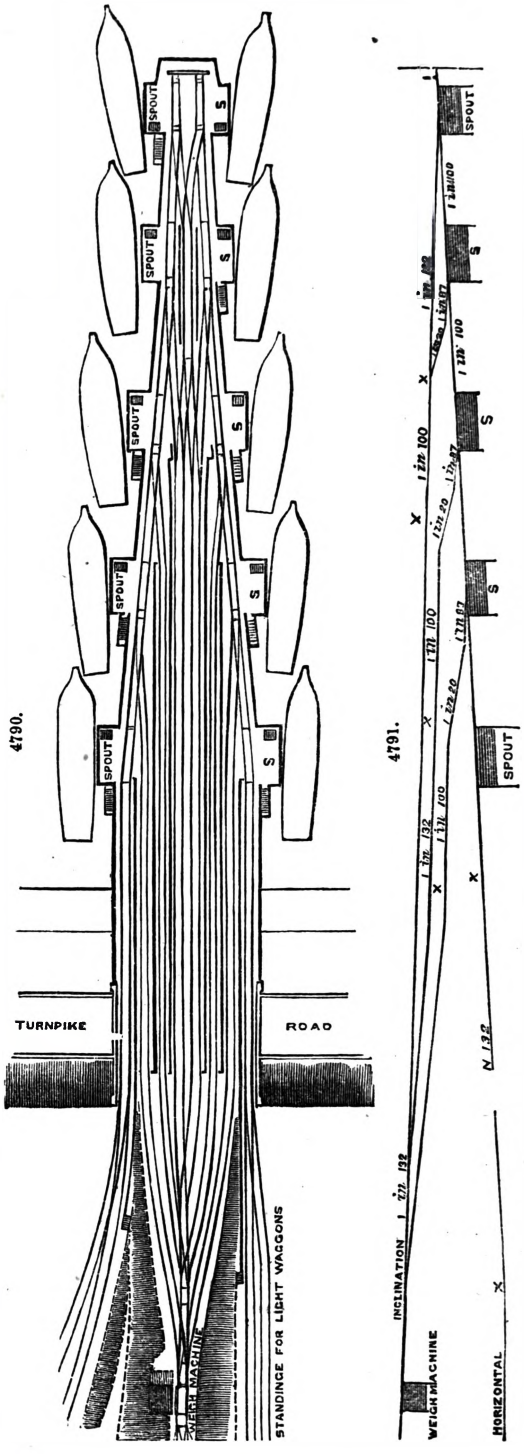

It was originally contemplated only to run three chaldron wagons, or two 8-ton wagons, down at a time; but experience has shown that twelve chaldron wagons, or six 8-ton wagons, may be taken with safety. In this case they are all run past the hopper, then drop back by gravity, and are emptied three, or two, at a time, as they pass over the spout, without being uncoupled. Great expedition results from this arrangement.

When a portion of a train of wagons is run down to the spouts, from the standage immediately adjoining, the remainder of the train follows by gravity; and it is necessary that it should be stopped by a quickly-acting chock. For this purpose a chock has been constructed of a somewhat novel kind, which works very well. The man in charge of the wagons first uncouples the number he intends to run down. He then lifts the lever, and the whole train descends by gravity. The moment the last wheel of the uncoupled set passes the chock, he lets the lever fall, and goes on himself with the uncoupled set, braking it down the steep incline; the remainder of the set being arrested by the chock.

The difference of level also of the crossing rails, between the loaded and light lines, is about 15 in. To meet this a system of sliding rails has been adopted, and is found to work well. The loaded wagons in their descent close the sliding rail, to allow them to pass over, and it is opened again by balance-weights, to admit of the passage of the empty wagons.

Before deciding on the inclinations to be given at different portions of this self-acting system,

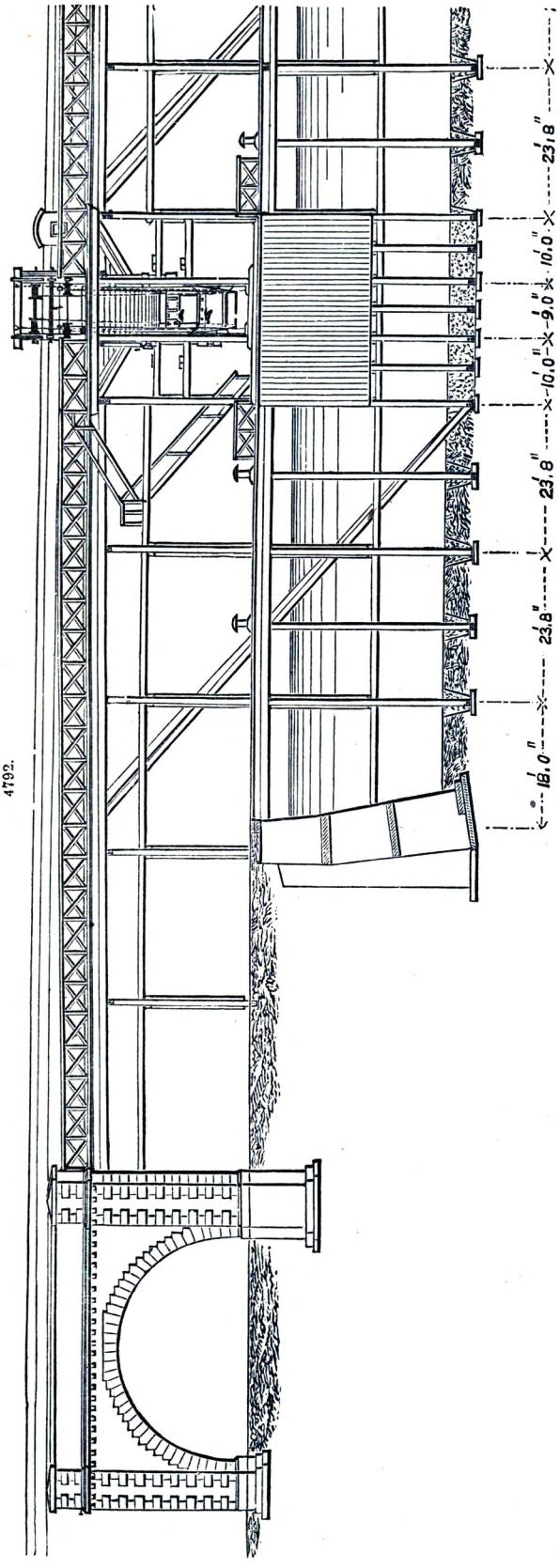

4792.

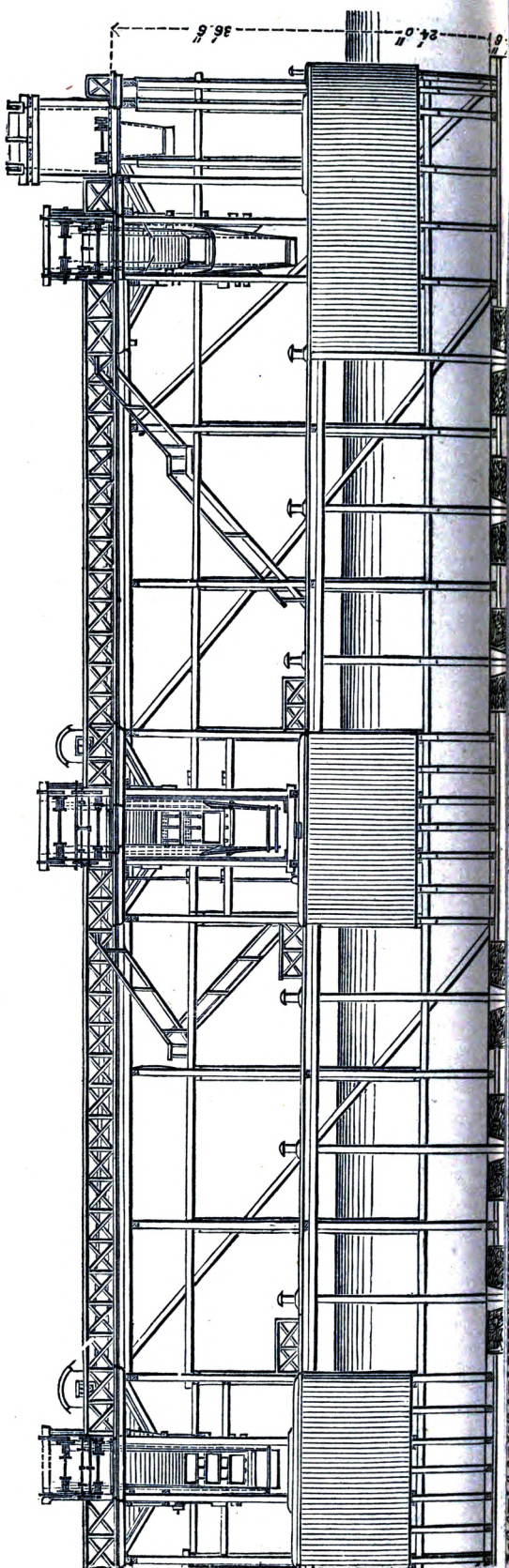

lengthened experiments were made on the ground above, where a complete plan of the proposed arrangement, for one spout, was laid down; and on it, wagons of all classes in use were tried, under different states of weather and circumstances. The result was that the inclinations adopted, which are much steeper than theory would give, were found to be necessary.

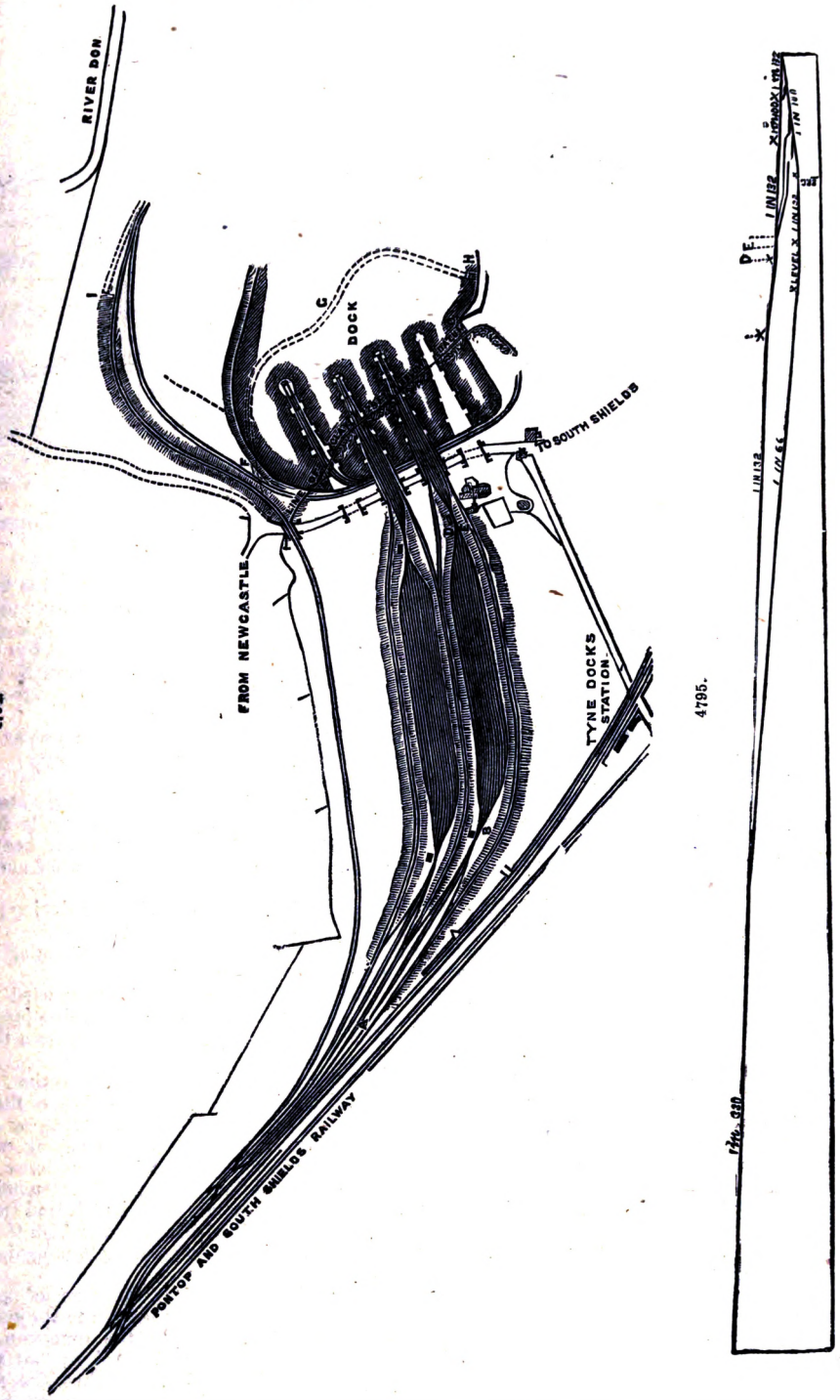

The quantity of coals shipped at South Shields, by the North-Eastern Railway Company, in the year 1858, was 1,203,524 tons. The number of collieries shipping coals to the Tyne Docks at that time was sixty-six. The coals from these collieries were divided into 227 different sorts;

and although these did not all come down at the same time, yet the necessity is at once obvious for the large amount of standage-ground and the number of lines of railway which have

4793.

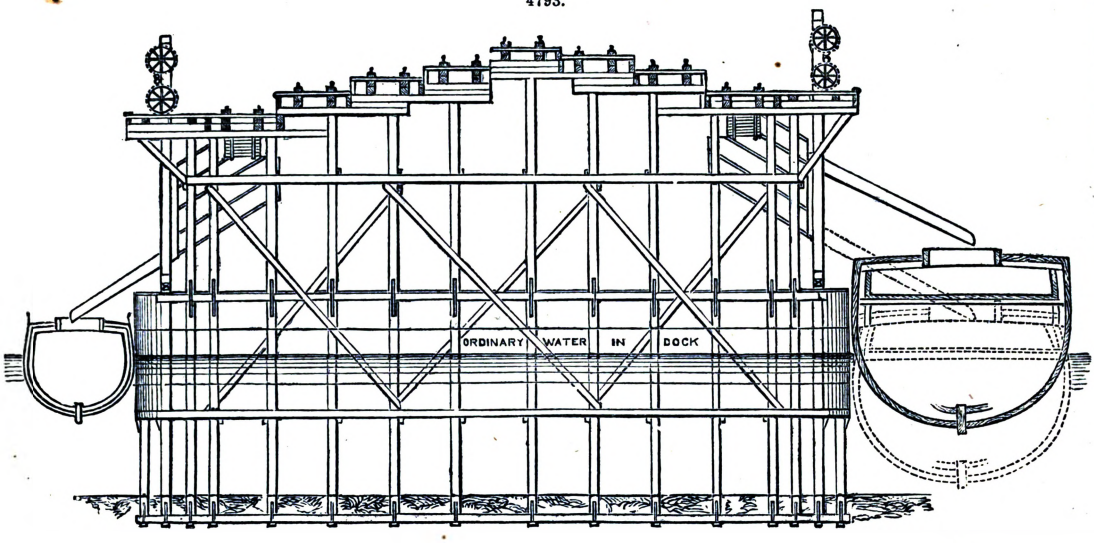

been provided. The length of single line of rails for each jetty is six miles. See Transactions Inst. C. E., vol. xviii.

KEY.

The word key is applied in the arts to anything that fastens, as a piece of wood in the frame of a building, or in a chain. Also any instrument which serves to shut or open a lock by being inserted into it; and made, by turning, to push its bolt one way or the other. In architecture, a piece of wood let in another across the grain to prevent warping, is called a key; so also is a piece of wood used as a wedge; or the last board of a floor when laid down. In masonry, the highest central of an arch is the key-stone. In machinery, a key is a piece of wood, often wedge-shaped, placed in coincident slots or mortises to hold parts together; a cotter, as in Fig. 2361.

A key-seat is a rectangular groove, especially in a wheel and shaft, to receive a key so as to prevent one part from turning on the other; it is frequently called a key-bed or a key-way.

KILN. FR., *Four;* GER., *Ofen;* ITAL., *Fornace;* SPAN., *Horno, Calera.*

The words kiln, oven, and stove, are often used synonymously, but although all three are appliances for the application of heat to certain industrial purposes, they differ essentially in their construction and operation. A kiln is a structure of considerable size, which may be heated for the purpose of roasting, burning, hardening, annealing, or drying anything; as a *kiln* for annealing porcelain, a *kiln* for burning lime.

An *oven*, a place, arched over with brick or stone-work, for baking, heating, or drying; hence any structure, whether fixed or portable, which may be heated for baking or like uses.

A *stove*, an apparatus variously constructed, which is heated by fuel or gas, for warming a room or building, for heating the blast of a furnace, for culinary or other purposes.

Figs. 4796, 4797, show Wm. Goreham's annular kiln for burning cement, constructed with a hollow chamber forming a movable partition across the kiln, the chamber having tubes projecting from it into the kiln, and being also formed to conduct the products of combustion from the flue on one side of the kiln to the other and to the central chimney.

Fig. 4796 a vertical section of part of the kiln, and Fig. 4797 a plan partly in section. *a a* is the body of the kiln; *b b*, horizontal flues carried around the upper part of both sides of the kiln; *c c*, vertical flues leading down from the flues *b*, and communicating with the interior of the kiln; *d d*, the movable hollow chamber forming a partition across the kiln, and having tubes d^1 projecting from it into the kiln. The partition is of wrought iron and is carried by rollers *e*, which run upon rails *f f*, fixed around the top of the side walls of the kiln; *g g* are flues extending from the top of the hollow chamber to connect two or more of the passages, b^1, b^1, which lead from the flues *b*, with the hollow chamber; *h* is a flue from the top of the hollow chamber by which the gases are led away to the central chimney *k*. The extremity of this flue where it abuts against the chimney is supported on rollers running on a fixed rail *l*.

In the arrangement of this kiln the slip is dried by being forced in the form of spray or minutely divided into and amongst the heated gases as they pass from the kiln to the chimney. The slip is fed into the annular trough *m*, from which it is pumped by the pumps *n* which are carried within the flue *h*. The suction-pipes of these pumps are perforated, so that a large amount of heated gas is drawn into the pumps together with the slip, and thus the slip as it is ejected by the pumps through the tubes n^1 will be dispersed in a fine spray, or it might be caused to pass through a number of small orifices. The slip issuing from the tubes n^1 comes against the fixed plate n^2 and drops on to the endless chain or band *o*, by which it is carried forward to the centre of the travelling hollow chamber *d*, and dropped into an inclined trough or shoot down which it slides and falls into the kiln through an opening o^1 at the end of the shoot.

This opening is fitted with a hinged flap, by which it is closed, except at the time when dried material is passing through it.

When the kiln is at work the hollow chamber d is from time to time moved a distance forward and away from the burning material, and the slip or dried material is fed into the kiln just in rear

4796.

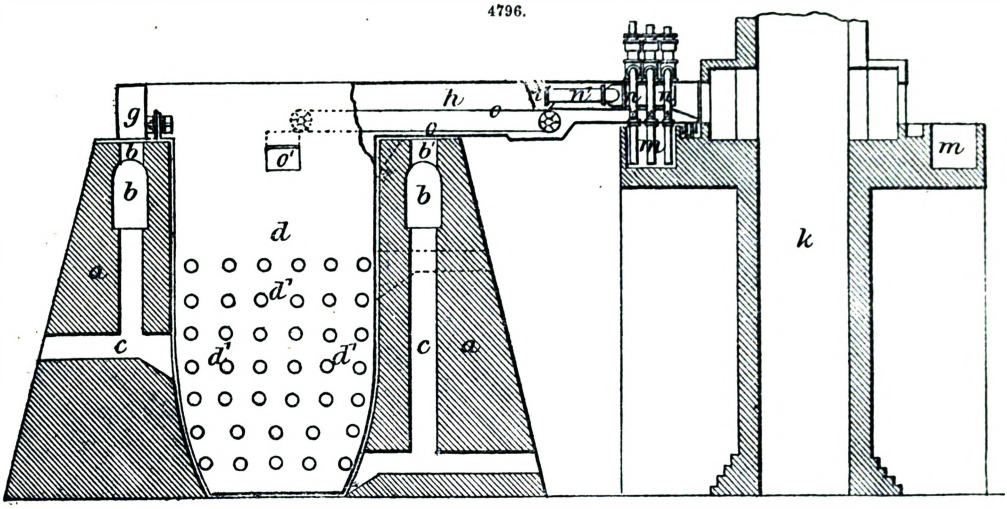

4797.

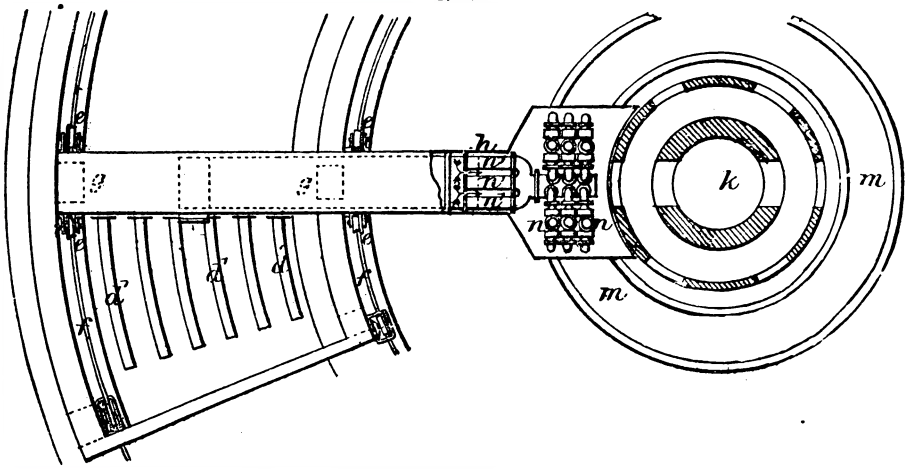

of the hollow chamber and on to and between the tubes d^1 projecting from it, the requisite quantity of fuel being at the same time fed in at top of the kiln. The fire is thus led gradually and continuously around the kiln.

In kilns for burning bricks and similar articles, C. G. Johnson constructs a flue running along the back end of a range of end-firing arched kilns or ovens, known as Newcastle kilns, and instead of placing a chimney on the end farthest from the fire, places it at the end next to the fire. A communication having been formed between the kilns by the flue running along the back of the range, it is so regulated by suitable dampers, that when firing any kiln in the range the heat can be drawn from it through any other kiln from back to front by the chimney placed for that purpose on the front end of that other kiln. The chimney on the kiln which is being fired is closed with a suitable damper.

One large chimney placed in any convenient position may be used in common by all the kilns in the range in place of each kiln having a separate chimney. In this case each kiln is connected with the chimney by means of a suitable flue at the end next to the fire. Each such flue is provided with a damper.

Fig. 4798 is a front elevation, partly in section, of a portion of a range of kilns thus constructed; Fig. 4799 a longitudinal section; and Fig. 4800 a plan, partly in section. In Fig. 4799 the section is taken on the line 1, 2.

a is the body of the kiln, where the bricks are stacked on a plane floor; b, a flue that connects any two or more kilns with each other, the communication being regulated by means of dampers b^1, b^{11}; c, chimneys with dampers c^1; d, an archway for setting and drawing the kilns, made up with bricks daubed with mud or clay, so as to seal it air-tight whilst the bricks are burning; $e\,e\,e\,e$, holes for cooling off the kilns after ceasing to fire, or when the bricks are completely

burnt; these holes are closed up whilst the firing is proceeded with; *f f f*, sight-holes to watch progress of the burning; *g g*, firing holes; *h h* and *j j*, stoke-holes for stoking the fires and breaking

4798.

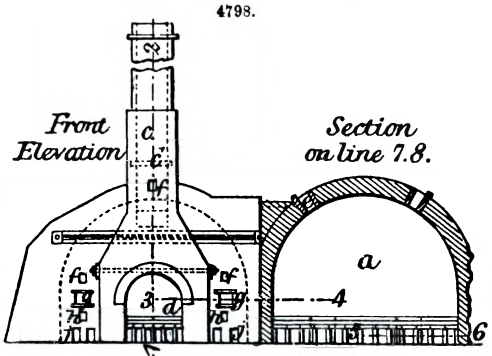

4799.

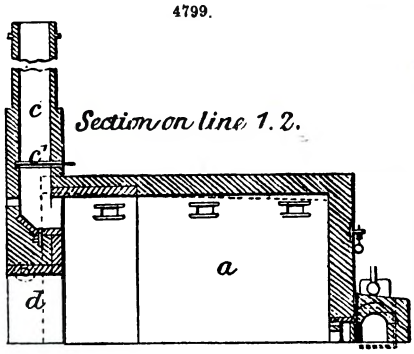

4800.

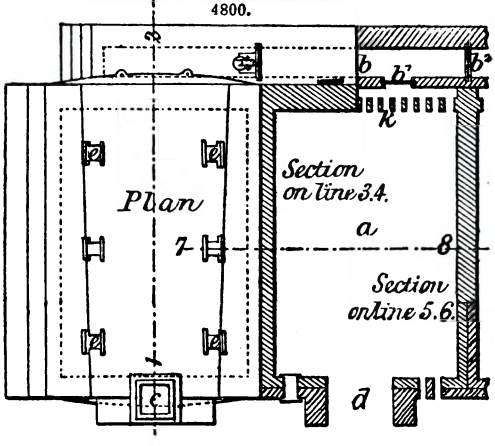

up clinkers; *k k*, flue-holes for spreading the draught, which is carried through dampers b^1 into the flue *b*, thence on to any other kiln as required.

The system of firing is the same as in the ordinary end-firing ovens. The fire is first made up in the bottom holes *j j*, and gradually worked up until it reaches the top of the hole *g*; the heat passes through the bricks, which have been previously dried by the heat from any other kiln, and through the dampers b^1 into the flue *b*, and then it is directed by means of the dampers b^1 and b^{11} to any kiln in the range set with green bricks; the heat traverses this kiln, and thence escapes through the chimney *c* on the same kiln. Care is taken that the damper c^1 in the chimney *c* of any kiln that is being fired is closed.

The mode of working is as follows;—No. 1 kiln upon being fired is put in communication with No. 2, this latter having previously had the opening in front closed up and the damper in the chimney opened. Thus No. 2 kiln acts as a chimney to No. 1 during the time that the moisture is being driven off the bricks in No. 1; whilst this operation is going on No. 3 kiln can be set, and as soon as the moisture is expelled from No. 1, communication with No. 2 kiln can be closed and that with No. 3 opened; the waste heat from No. 1 will then pass into No. 3 and be drawn through the green bricks by the chimney in front, the damper in it being opened; No. 1 is now finished off by firing in the usual way. The moisture in No. 3 kiln having been driven off by the waste heat from No. 1, the damper in its chimney is closed and communication effected with any other kiln in the range set with green bricks. Thus the waste heat is constantly passed forward, and the only coal expended on any kiln is that required to finish off the burning after all the moisture has been expelled, and it is found that about one-half the coal consumed in ordinary end kilns is expended in effecting this.

It will be seen that there is no difficulty in timing the operation so as always to have a kiln ready to receive waste heat, as it is competent to direct the waste heat from any one to the other, or to be firing more than one and passing waste heat through one only, or firing one and passing the heat through more than one, or burning several and passing waste heat through several at once, according to the quantity of work being turned out; it will also be seen that in these kilns there is no danger of driving moisture from the burning bricks to the green ones, as in the case of other designs which have been introduced with the object of economizing waste heat, and that the well-known value of end kilns for producing the soundest articles is therefore unimpaired. The fresh-stacked bricks in these kilns not being immediately exposed to the direct action of the fires are less liable to crack, as the moisture remaining in the bricks when taken from the stoves is gradually expelled by the waste heat from one or more of the other kilns, and consequently the bricks are sounder and there is less waste than in ordinary kilns.

Hoffmann's Kilns.—**Fig. 4801** represents a longitudinal sectional elevation of a kiln on Hoffmann's system, as arranged by Chamberlain, Craven, and Wedekind, constructed in a straight line. *a* is the brickwork of the kiln, *b* the fire-place at one end, the opposite end opening into a chimney *c* by a flue *d*. A number of openings *e e* provided with close-fitting lids or covers are formed at suitable intervals along the roof of the kiln, such openings being intended for the introduction of small fuel. The entire length of the kiln having been filled with bricks in a fit state for burning, a fire is lighted in the fire-place *b*, and air allowed to enter freely through the fire-door. So soon as the heat at this end of the kiln is sufficiently great to

4801.

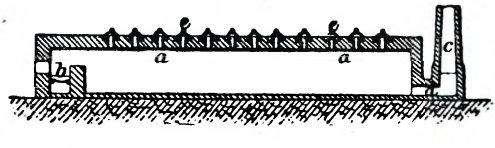

ensure the combustion of fuel introduced from the top, the supply of fuel is then commenced through the openings *e e*, and the heat maintained at the temperature requisite for burning the bricks. The hot air and products of combustion pass along the entire length of the kiln between the goods stacked in it, gradually heating them, and finally pass off by the flue *d* to the chimney *c*. So soon as that portion of the stacked bricks into and amongst which the fuel has been supplied has become sufficiently burnt, the further supply of fuel is stopped, and the supply is then carried on through other openings *e* in advance, so as to mingle the fuel with the adjoining bricks, which by this time will be sufficiently heated to ensure the combustion of such fuel. Those bricks which have been thoroughly burnt are now allowed to cool gradually by the action of the cold air which passes amongst them and takes up caloric, which is transferred to the succeeding bricks on its way to the chimney. In this manner the process of burning is continued until the extreme end of the kiln has been reached, some of the goods having in the meantime been drawn and replaced by fresh ones, so that the kiln will be ready for relighting by the time the last of the goods is withdrawn. These kilns may be provided at intervals with sliding doors which extend across the kiln, and subdivide it into a number of separate compartments; facility is thus afforded for making use of these compartments as drying chambers, whilst the other portion of the kiln is burning. The drying may be facilitated by bringing hot air from the cooling portions of the kiln into the drying chamber for the time being by means of a movable pipe or flue, which may be adjusted to any of the holes *e* in the roof. When the bricks are sufficiently dry, the doors and flue are removed so as to bring them within the direct range of the hot air and products of combustion from the burning bricks preparatory to their being fired from above. In this arrangement flues provided with dampers should be employed leading from each compartment to separate chimneys, or to one common flue leading to a single chimney, and each compartment should have near its upper part a flue for carrying off the steam and vapour evolved during the process of drying.

Fig. 4802 is a section, and Fig. 4803 a plan of a pottery kiln made in two compartments; Fig. 4804 a longitudinal section, and Fig. 4805 a plan of a similar kiln made in three compartments; any number of compartments may be used in these kilns, but they are built in a straight line, and have no continuity of action. *a* is the brickwork of the kilns; *b*, b^1, b^{11}, are fire-places for heating the several compartments 1, 2, and 3; *c*, a chimney common to all the compartments; and *d*, a flue or aperture opening direct into the chimney from the last compartment of the series; *e e* are openings in the roof of the kiln provided with close-fitting lids or covers for the introduction of the fuel into the fire-places b^1, b^{11}, which heat the compartments 2 and 3. The front compartment is heated by the furnace *b*, which is supplied with fuel through the door *f*. The several furnaces or fire-places may be provided or not with grate-bars as required. *g* is an air-flue extending beneath the floors of all the compartments excepting the last of the series, and communicating with the ash-pits of the several furnaces or fire-places; *h h* are openings for the entrance of fresh air into the ash-pits, and thence to the flues *g*. In using these kilns both or all the compartments are filled with the pottery to be burnt; a perforated wall of fire-brick *i* is then constructed between each furnace and its corresponding compartment, to prevent the ashes from coming in contact with the ware. A fire is now lighted in the furnace *b*, and the hot air and products of combustion pass through the several compartments

4802.

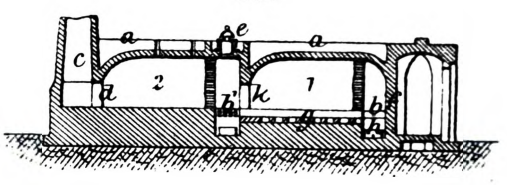

4803.

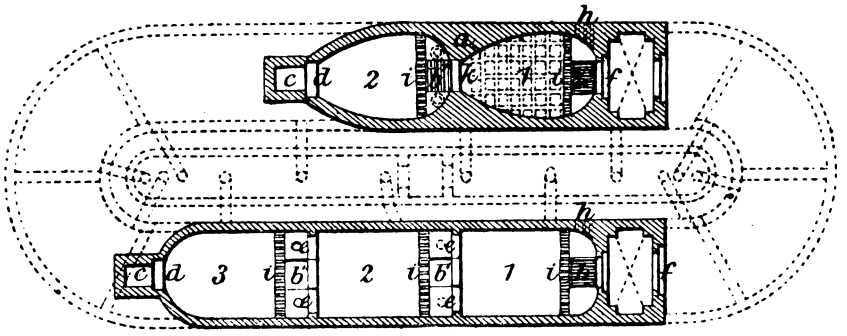

4805.

4804.

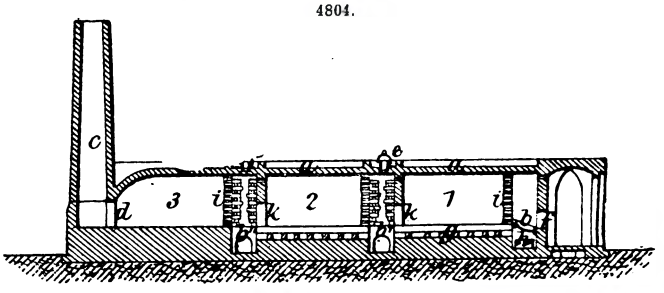

on their way to the chimney, heating the whole of the ware in the compartments which communicate with one another by the openings at *k k*. So soon as the ware in the first compartment 1 is sufficiently burnt, the door of the furnace *b* is closed so as to exclude air, and the fire-bars are carefully covered over with earth. The air-inlets *h h* are now opened so as to admit the air along the flue *g* to the furnace b^1, the heat in which escaping from the compartment 1 is sufficient to effect the combustion of the fuel which is supplied to it through the opening *e* above. The second compartment 2 is fired whilst the ware in the first compartment is gradually cooling. When the wares in the compartment 2 are burnt, the furnace b^{11} is lighted in the same way as the furnace b^1, and air supplied by the flue *g* as before, the process thus continuing step by step until the whole of the compartments have been fired, by which time the goods in the first compartment will be ready to be withdrawn. Above the furnaces b^1, b^{11}, a number of projecting bricks are built in the walls so as to catch the fuel as it is thrown in from the top, and thus ensure a uniformity of heat throughout the full height of the furnace.

Fig. 4806 represents a vertical section, and Fig. 4807 a sectional plan, of a continuous kiln combined with a second or inner annular chamber, by which dry or warm air may be taken from any of the heated chambers of the kiln to any of the other chambers, for the purpose of drying green bricks or other articles from which it is desired to drive off the moisture. *a*, the brickwork of the kiln, a portion of the annular burning and drying space of which may be shut off or separated from the rest by two movable diaphragms *b*, b^1, to form a drying chamber. The entire kiln is capable of being subdivided into a number of compartments, numbered in Fig. 4807 from 1 to 12 inclusive, although any other number may be used. Each compartment is provided with a door at *c c*, through which the goods are introduced and removed. From the upper part of the several compartments extend a series of flues *d*, converging towards and opening into an annular smoke-chamber *e*, which surrounds the chimney *f*, and communicates therewith by the passages or openings *g*. The inner ends of these flues inside the smoke-chamber are closed or left open by means of conical plugs *h*, which, by being elevated, will regulate the amount of opening of the flues. A closed man-hole *i*, Fig. 4806, is made in each of these flues for the facility of cleaning. Valves *k* connect any one of these flues when open with the annular passage *l* for dry or warm air, the bottom of the passage communicating by means of valves *m* with the flues *n*, which lead from the lower portions of the compartments of the kiln to the smoke-chamber *e*, before referred to. These flues *n* are also provided with conical plugs or dampers *o*, similar to those which are fitted on to the inner ends of the flues *d*.

In Fig. 4807 the chambers 3 and 4 are represented as being shut off from the rest by the doors *b*, b^1, and are supposed to contain green bricks; the chamber 5 is being filled whilst the goods are being removed from the chamber 6. The chambers 7, 8, 9, and 10, all contain burnt goods in the act of cooling whilst the chambers 11 and 12 are being fired, the hot air therefrom passing through the goods in the chambers 1 and 2, and being obstructed by the door *b* from entering the drying chambers 3 and 4 direct, it passes off by the bottom flue n^1 of the series direct to the smoke-chamber *e*, and thence to the chimney, the plug or damper o^1 being more or less open for that purpose according to the draught required. The fresh air enters by the open doors c^1, c^1, passes through the heated goods in the chambers 7, 8, and 9, thereby cooling the goods, and at the same time taking up caloric. A portion of this air so heated passes onwards through the chambers 10, 11, 12, 1 and 2, and thence by the flue n^1 to the chimney, whilst another portion enters one of the flues *d* at the mouth thereof d^1; and as the plug or valve h^1 on the inner end of this flue is closed, the heated air enters by the open valve k^1 into the annular chamber or passage *l*. The warm air then traverses the chamber *l*, passes through the only open valve m^1 of the series into the flue n^{11} of the series, the end of which in the smoke-chamber is closed by the valve o^{11}, and thence to the drying chamber 4 and chamber 3, and finally escaping at d^{11} by the flue d^{111} and open plug or valve h^{11} into the smoke-chamber *e* and chimney *f*. The whole of the valves *h*, *o*, *k*, and *m*, are kept closed, except those which are in connection with the flues for the time being, and so soon as the goods in the drying chambers 3 and 4 are sufficiently dry for burning, the doors *b*, b^1, are removed, and replaced at b^{11}, b^{11}, exposing the bricks in the chamber 3 to the direct action of the heat from the kiln fires, whilst the chamber 5, just filled with green bricks, forms with the chamber 4 a drying chamber. A fresh set of valves or dampers is now opened, and the operations of burning and drying proceed in a continuous manner.

Figs. 4808, 4809, are respectively a vertical and horizontal section of a similar kiln provided with a separate collecting flue and chimney for the abduction of the steam evolved during the drying of the green bricks. In drying green bricks, the quantity of steam evolved, which varies periodically, sometimes impedes the draught, more or less, when allowed to mix with the gases of combustion; but the inconvenience is remedied by leading off the steam by separate and distinct passages, so that it does not mix with the gases of combustion until both have ascended some distance up the chimney; this is accomplished by using a separate steam collector *p* communicating by passages *q* with an internal steam-chimney *r* built inside, and extending a convenient height up the chimney, so that the steam and products of combustion are not allowed to mingle with each other till they arrive nearly at the top of the chimney.

In Figs. 4808, 4809, the hot air for drying the bricks enters the chambers 3 and 4 in the manner described in reference to Figs. 4806, 4807, but in place of passing off with the steam into the smoke-chamber *e*, they are conducted by the passage *d* and valve *h* into the steam-chamber *p*, and thence into the internal chimney or tube *r*, whilst the gases and products of combustion pass off by the flue *n* and valve *o* into the smoke-chamber *e*, and thence by the passages *g* into the chimney *f* surrounding the tube *r*; in all other respects this kiln is worked in a similar manner to the kiln shown at Figs. 4806, 4807. If desisred the slits or openings in the arches of the annular burning chamber of these kilns or ovens for the admission of the interrupting doors or dampers *b*, b^1, may be dispensed with by placing the entrance *c* to each compartment at the end next the door or damper instead of in the centre of the compartment, as in the Figs. 4806 to 4817, and by having

4806.

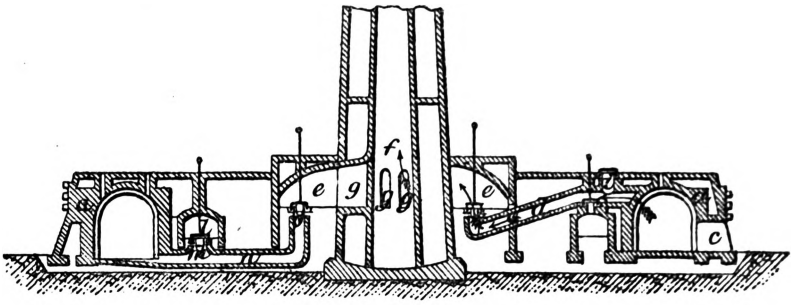

4807.

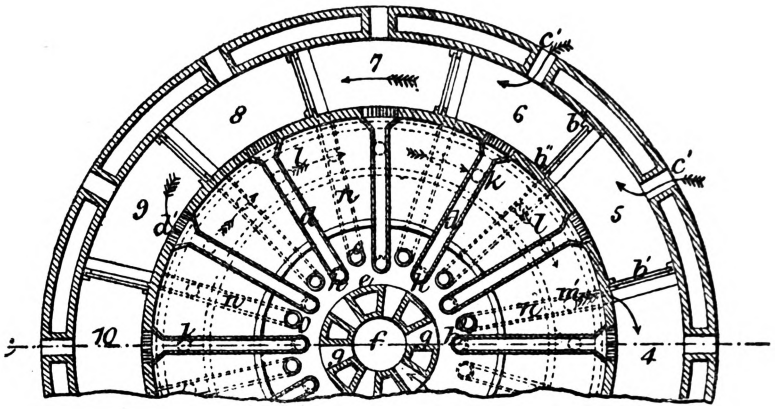

4808.

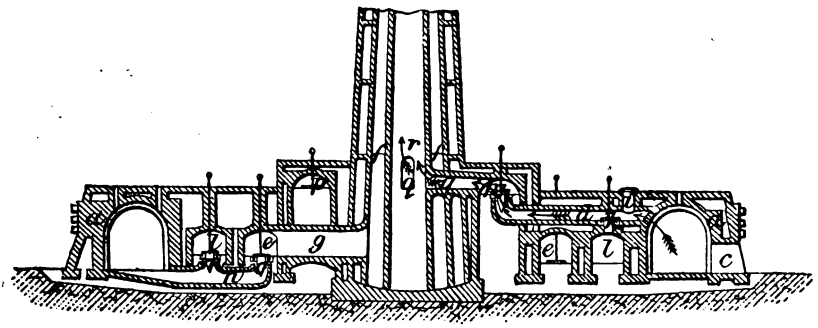

4809.

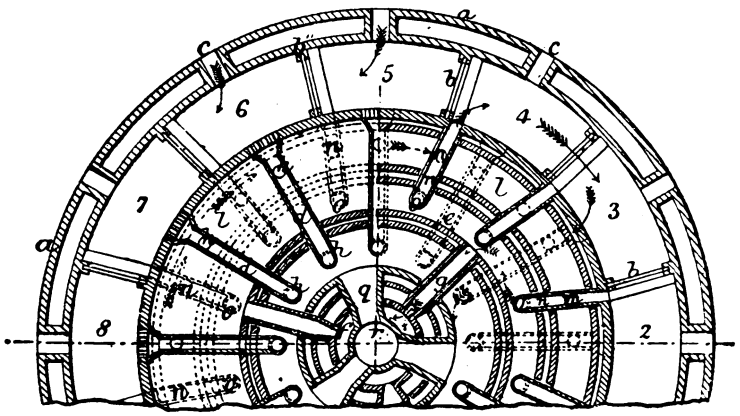

the doors or dampers made up in several parts, each small enough to be introduced through the entrance *c*; by this means the doors *b*, b^1, may be inserted or removed by hand through the same apertures by which the kiln is filled and emptied.

In the burning of pottery and other ware which is required to be protected from direct contact with the fuel and products of combustion, the compartments may be constructed as in Figs. 4810, 4811. In this case a closed chamber *a* is built inside each compartment, but having a free passage *b* along the sides and under the bottom for the circulation of the heat and products of combustion. The fuel is fed in from the top through apertures *c*, and is kept loose and open by falling amongst the projecting bricks built in the sides of the fire-chamber, as shown at *d*. A man-hole *e* is formed on the roof of the chamber *a* for the introduction and removal of the ware, this hole being provided with a close-fitting lid or cover.

4810.

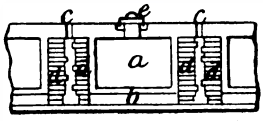

4812. 4813.

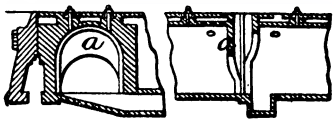

4811.

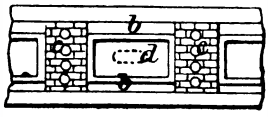

4814. 4815.

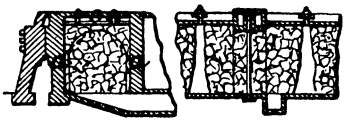

Figs. 4812, 4813, are a transverse and longitudinal section of a portion of a kiln intended for burning limestone and other substances which are liable to shrink considerably during the process of burning. As this shrinkage or falling of the substances would leave a void space between the roof and the surface of the substances, the hot gases or products of combustion would, if not checked, pass over the top of in place of amongst the substances. To obviate this defect, an arch *a* is built so as to extend downwards from the roof between each compartment sufficiently far to present a barrier to the gases passing along the surface of the substances, and compel them to descend into and amongst such substances when passing under each arch. Another mode of accomplishing the same object is shown at Figs. 4814, 4815, where the chamber of the kiln is composed of two side walls *a* only, with arches at intervals, the substances being covered over between these arches by a covering of loam and earth *c*, which descends with the shrinkage of the substances.

In treating those materials which lose altogether their original form, and fuse or melt to a mass when subjected to a great heat, the fire-places of the kiln must be enclosed by an open setting of fire-bricks or tubes *a*, Fig. 4816, the choking up of the fire-places will then be prevented. The doors or openings for introducing the goods or materials to be burnt in the kilns may be made either at the top or sides of the compartments or kiln-chamber; in some cases, as in the burning of limestone, it will be found advantageous to make the discharging holes in the bottom, and to have a tunnel or passage beneath, along which trucks or wagons, Fig. 4817, may be run to receive the contents of the several compartments.

In a recent arrangement of Hoffmann's kilns they are adapted to a system of forced combustion, and the construction so simplified as to render them suitable for contractors or temporary works, while the steam and products are rapidly carried off and greater economy of fuel obtained.

4816.

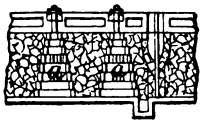

4817.

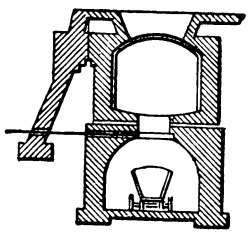

4818.

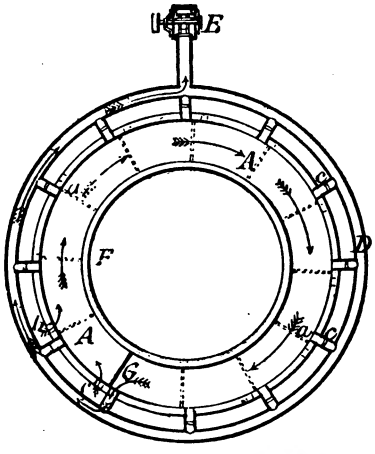

4819.

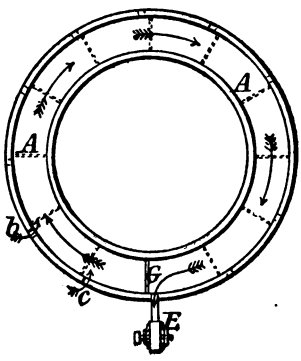

Figs. 4818, 4819, are sectional plans of a cheap construction of kiln intended to be worked on the continuous system, and specially adapted for the temporary use of contractors, or for erection on land containing only a thin seam of clay. In these modifications the construction of chimneys and smoke-chambers is rendered unnecessary, a forced combustion being maintained by the aid either of an exhauster or blower.

Each section of the annular chamber communicates by a branch passage or flue C with one

common annular flue D, leading to the exhaust-fan E, permanently connected with the flue D. Although the flue D and fan E are shown on the outer side of the kiln, they may be disposed in the central or internal space F enclosed by the said annular or continuous chamber, in which case the branch flues C would open from the inner wall of the chamber. Each branch flue C is provided with a damper, in order to guide the draught in the proper direction. In the arrangement shown at Fig. 4819 all flues and dampers are dispensed with, as well as the chimney and smoke-chambers. A is the annular kiln, and E a portable exhaust-fan, which is brought into connection with the different compartments or sections of the annular chamber as the burning proceeds. Special openings are made in the side wall of the kiln for the introduction of the exhaust-pipe, although if necessary each of the doors leading into the kiln may have an opening made for that purpose. G represents a closed partition, and arrows point out the direction of the draught. The fresh air enters by the openings *b c*, and after passing through the kiln A is drawn through the exhauster E along with the products of combustion in both arrangements. If the kiln is of small diameter, or the chamber A too short to completely absorb the heat, arrangements can easily be made for causing the heated air to pass through separate drying chambers or under a drying floor.

Fig. 4820 is a vertical section of a small fire-grate, which is placed over each of the firing holes in the roof of that part of the annular chamber of Hoffmann's kiln in which the wet bricks intended to be dried are deposited. *a*, one of the firing holes in the roof situate above that portion of the kiln which contains wet bricks; *b*, the fire-grate in which a fire is kindled. The down draught into the kiln draws in with it through the firing holes *a* a considerable amount of heated air and gases at numerous points, and as cold air is admitted through side openings *c c* below and surrounding the grate *b* it mixes with the hot air, and thus a series of currents of warm dry air enter through the roof of the kiln, and by circulating amongst the bricks effect their rapid drying.

4820.

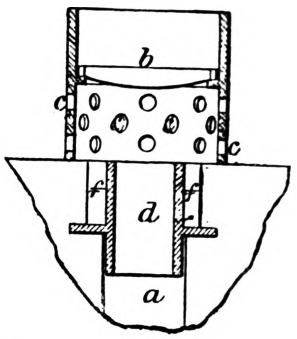

Occasionally a loose or removable cone *b*, Fig. 4821, having a contracted mouth, resting on the top of an iron feed-pipe *d*, is fitted into the firing hole *a*. As the mouth of this cone is contracted to about 1 in. in diameter, it considerably diminishes the volume of cold air, which, when a strong draught is on, rushes down the firing hole so soon as the lid or cover *e* is removed, cooling the bricks, whilst on the other hand it serves to check the outward puff of gas and hot air which is liable to take place when, the draught being weak, a pressure of gas accumulates in the annular chamber of the kiln, involving not only a loss of heat, but a waste of fuel, and occasioning discomfort by causing the fuel to be blown up into the eyes of the stoker. The firing holes sometimes require to be used as air-inlets, as, for example, when they happen to be situate over that section of the kiln containing the bricks that are drying, therefore they cannot be permanently contracted, since the full size of orifice is necessary to afford free ingress of air, with a view to the more effectual drying of the bricks. As the cones *b* are loose, they may be readily removed when the holes *a* are required solely as air-inlets into the section containing fresh bricks. During the intervals of stoking or supplying fuel the firing holes with their cones are kept closed by the cap or cover *e*, which is maintained air-tight, or nearly so, by the joint *f*.

4821.

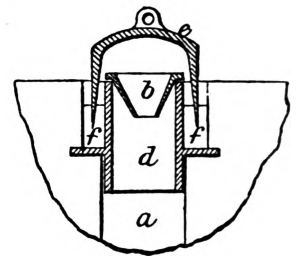

C. E. E. Muller has effected an arrangement of kiln for carrying out a mode of heating ceramic products continuously and progressively, and also utilizes Siemens' system of heating by gas.

Muller's kiln, Figs. 4822, 4823, consists of a number of chambers separated from each other by perforated sides and bottoms, and disposed across the path of the flame. Through these chambers the articles to be burned or baked are passed along by pistons worked by mechanical means, so as to be gradually brought towards and into the hottest part of the chambers, and then by passing onwards to be as gradually conducted to the cooler end of the chambers; a small surface only of the bulk of the articles or substances so traversed through the chambers being exposed to the action of the flame, the process being thus progressive and continuous. The chambers are heated by gas generated in a gas-generating furnace; the flames play freely through the perforations, and after passing transversely through the chambers enter a heat regenerator, which serves to heat the air for supporting the combustion of the gases.

The length of the chambers, and the speed at which the articles or substances are caused to traverse through them, depend on the nature of the substances under treatment.

Figs. 4822 to 4824 show a kiln of this description, with a tubular heat regenerator. A vertical hopper is arranged at the front of the kiln; into this hopper the fuel is charged, and by an arrangement similar to that at p. 2089 is converted into carbonic oxide. The fuel may be supplied at long intervals, which is a considerable advantage. The surface of the fire-grate is so calculated that a slow draught is obtained, and the combustion of the fuel being slow, ashes only are formed instead of scoria; the attention required by the fire is thus reduced to a minimum. The fire-grate is also so arranged as not to admit of the ingress of air into the passage until it has traversed a great thickness of fuel. Carbonic oxide therefore only passes into the conduit marked with an arrow in the section. O are the openings for the outlet of the carbonic oxide from this passage, Figs. 4822 and 4824.

At each side of the passage there is another passage, shown rectangular in Figs. 4822 and 4824, and when heated air passes through oblique conduits *a*, which correspond to the openings O, a

4822.

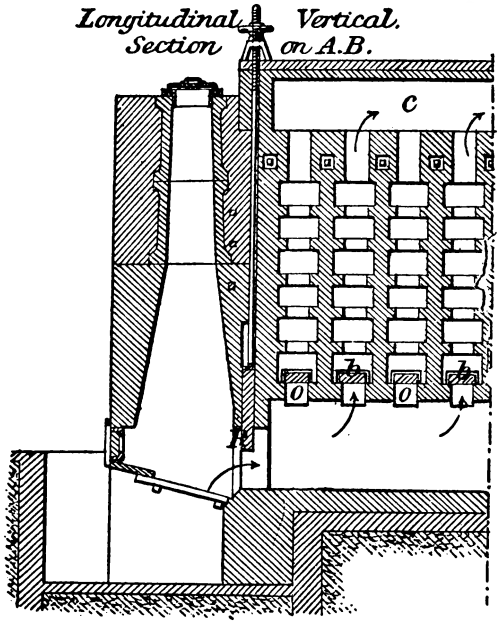

4823.

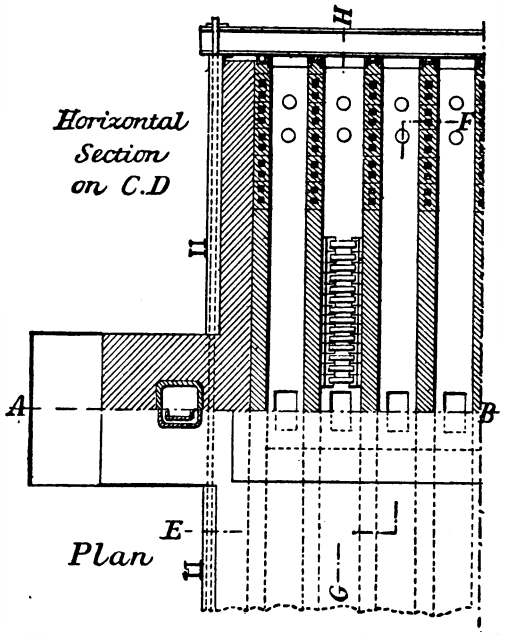

mixture of air and carbonic oxide is produced; the combustion is continuous when once the kiln is in operation, and in order to start it, it may be readily fired. The arrows show the admission of air. The space above serves for the expansion of the flame. *b* are the dampers on each side for regulating the admission of air. The admission of the carbonic oxide from the passage may also be regulated with facility by means of a damper. A damper R^1, either vertical or horizontal, could be readily applied.

4824.

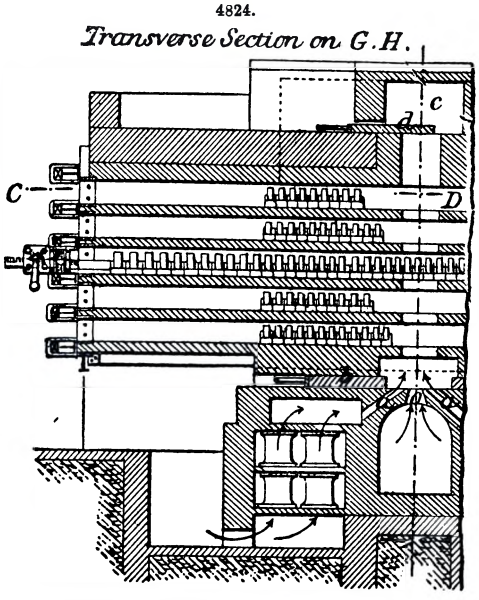

Fig. 4824 illustrates the operation of the kiln. The products to be baked or burned are disposed on small carriers composed of refractory clay, which are in contact with each other, and are propelled by suitable apparatus a distance of 3 to 4 in. at a time. As the products advance towards the centre of the kiln, which is perforated at the centre of the passage, leaving at each side an edge on which the carriers slide, they are prepared to be subjected to the intense heating produced by the flames which are formed at O, *a*, and which traverse the kiln from the bottom to the top by passing through the openings formed immediately above. The flames then pass into the upper flue *c*, which extends along the kiln, dampers *d* being provided for the purpose of regulating the egress of the flames. Each vertical row of passages thus becomes a kiln into which the products to be baked or heated pass, and the flame of which is regulated at will at both its admission and outlet. The time for traversing the passage is varied according to the nature of the materials to be baked. As soon as the zone of flames is traversed, it is required that the cooling should commence, which is only possible on the condition of being able to carry off the caloric radiated from the burnt products. This caloric is transmitted to the partitions and to the soles; and in order to utilize the heat thus absorbed, the latter portion of the partitions is made hollow. The iron flooring carrying the lower sole of the kiln admits of passing beneath, in order to attend to the dampers *b*, Fig. 4824, and of the air being conducted to the heat regenerator. The iron flooring is so arranged as to admit of air readily passing into the partitions. The perforated soles also cause a draught, which, in conjunction with the absorption by means of the current of air in the partitions of the caloric radiated, admits of the successive cooling of the burnt products.

At the end of the upper passage, which receives the flames proceeding from the ovens, the flames are separated into two, and descend through vertical flues. On arriving at the bottom of

the kiln, the flames circulate in two passages at the side of those for the carbonic oxide. These passages are formed in two tiers, in which the circulation is in the downward direction; but through the tubes the air passes upwards to this kiln with the greatest simplicity.

Fig. 4825 is a vertical section, taken at line *a b* of Fig. 4827, of one of A. Batchelar's kilns; Fig. 4826 an elevation of a similar kiln; Fig. 4827 a sectional plan, one half being taken at *c d* through furnaces in Fig. 4825, and the other half at *e f* in the same figure; Fig. 4828 a sectional plan through the horizontal heat flues.

Batchelar usually employs a kiln circular in plan, and having a domed roof, as shown in the drawing; but kilns of other forms may be constructed in accordance with his arrangement.

A A are furnaces constructed in the thickness of the wall with fire-bars in the ordinary manner, each furnace being fed with fuel through the opening A^1, which is closed when the furnace is in

4825.

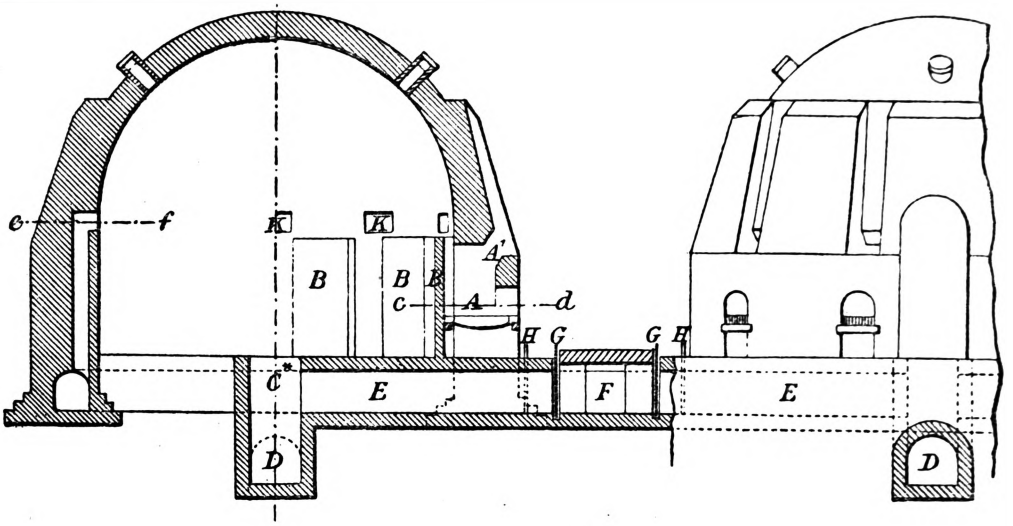

4826.

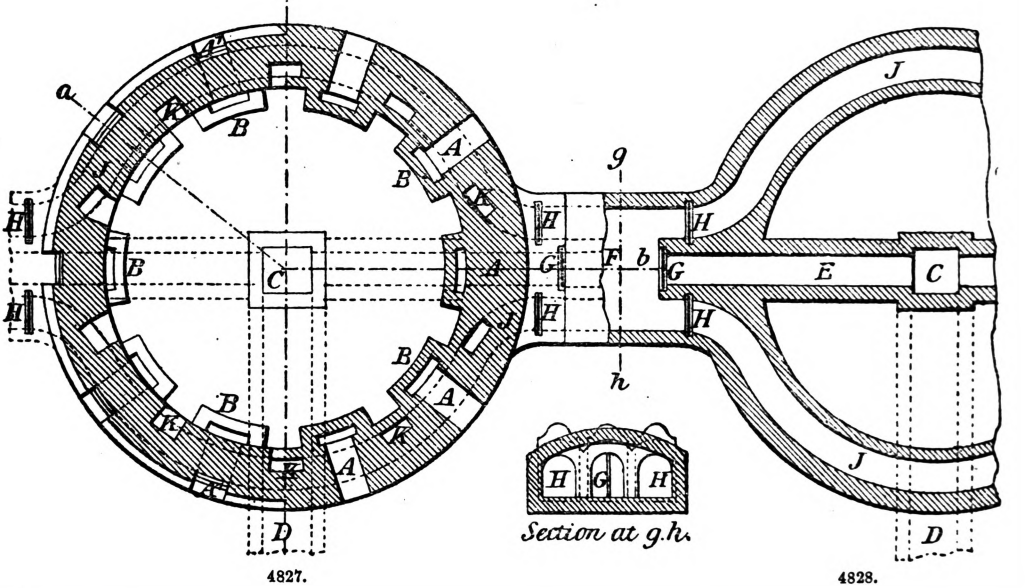

4827.

4828.

operation. The number of furnaces may be varied, according to the size of kiln and quality of material to be operated upon. In the example shown ten are employed. Inside the kiln, and opposite to each furnace, are built short walls B B, forming a casing or pocket round the end of each fire-place, which directs the heat and flame upwards towards the upper part of the goods stacked in the kiln. In the floor of the kiln there is an opening C leading into the main flue D, which conducts the heated products of combustion direct to the chimney, when in the course of burning it is necessary to so dispose of them. There are also formed beneath the floor of the kiln heat flues E E, which each open at one end into the passage C, and at the other end into chambers F, constructed in the space between two adjacent kilns; dampers G G are adapted to close the ends of the heat flues when required. Flues J are constructed in the wall of the kiln near the

bottom. Short vertical heat flues K K are also formed in the wall of the kiln; their lower ends communicate with the flues J, and their upper ends open into the kiln, Figs. 4825 and 4827. The flues J pass half round each kiln, and open at each end into the chambers F by the side of the flues E, the ends of flues J being also closed by dampers H H when required.

Figs. 4829, 830, show the arrangement of these kilns in a series for working them in rotation, so as to utilize the waste heat passing from the kiln in active operation to the purpose of drying

4829.

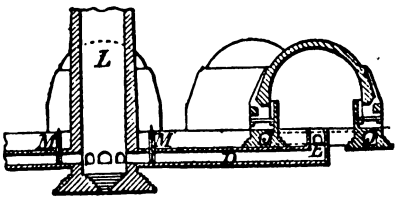

4830.

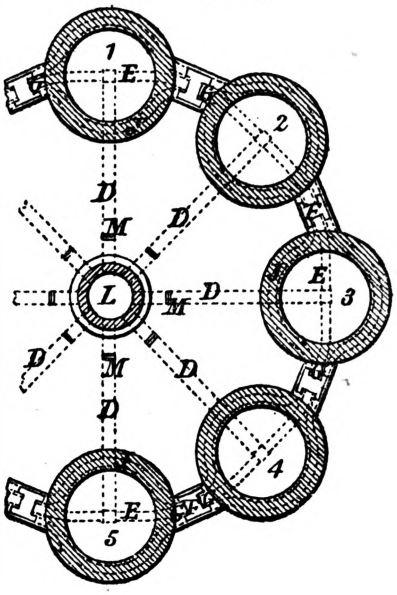

green or unburnt goods stacked in another kiln, in order to prepare them for the final burning. Numbers 1 to 5 represent a series of the above-described kilns grouped round a central chimney L. Main flues D D lead from the centre of each kiln to the chimney shaft, dampers M M being fitted to each flue to open or close communication between the kilns and chimney, as may be desired.

The method of working these kilns in a series is as follows:—Supposing the fires to be lighted in kiln No. 3, Fig. 4830, the dampers H H at end of heat flues J are kept closed, the damper M^3 in the main flue of that kiln leading to the chimney is opened until the fires are well burnt up, when the damper M^3 may be partly closed, and the dampers H^4 H^4 leading from chamber F into heat flues J J of kiln No. 4, in which green goods are stacked, are partly opened, the damper M^4 in main flue leading to chimney of No. 4 kiln being also opened, the damper G^4 being meanwhile kept closed, and G^3 open. By these means one portion of the heated gases generated in kiln No. 3 passes direct to the chimney, and the other portion by the heat flue E into the heat flues J J, and so by flues K K into kiln No. 4, thence through and amongst the green goods, and finally escapes by the main flue D of No. 4 kiln into the chimney. By properly adjusting the dampers in the flues as indicated, the amount of waste gases passed from the kiln in operation to the next may be so regulated as to ensure a proper draught for maintaining the combustion of the fuel at all stages of the operation, and by gradually closing the damper of the kiln in operation leading direct to the chimney, and opening that leading to the next kiln, the whole of the waste gases may be passed through the latter towards the completion of the firing operation of the first kiln; and by that time the goods in the second kiln will have attained a very high temperature. As soon as kiln No. 3 is burnt off, the damper G^3, leading to kiln No. 4, may be closed, as also partially the damper M^3 in main flue, and the kiln left to cool gradually. Kiln No. 5, the next in order, containing green bricks, will be gradually brought into communication with kiln No. 4 by means of the dampers, when its fires are lighted in the same manner as described for Nos. 3 and 4. Kiln No. 2 in the series having been burnt off previously to No. 3, will have been cooling while the latter was burning, and No. 1 having been previously cooled, the fired goods will have been discharged from it, and green goods recharged into it. Whilst No. 3 kiln has been burning, No. 7 has also been burning, and Nos. 5, 6, and 8 have held the same position in relation to it that Nos. 1, 2, and 4 have been described as holding to No. 3. If desired, dampers may be so arranged in the passages C of each kiln, as seen in dotted lines at *, Fig. 4825, that the heat flues E may be shut off entirely from any number of kilns; by this means a communication may be opened between a kiln which is being cooled and another in the series not immediately adjacent containing green goods.

The usual consumption of coal a thousand of ordinary bricks varies in these kilns from 3 to 4 cwt., according to the kind of clay used. Each kiln is usually of sufficient capacity to contain from 20,000 to 30,000 bricks, and the time occupied in burning off a charge after it has been thoroughly dried by the waste heated gases from the kiln last burnt ranges from thirty-six to forty-eight hours. An ordinary Staffordshire kiln, merely heated by the furnaces, and without any provision for the employment of the waste heat, will consume from 6 to 7½ cwt. of coals a thousand. In the burning of bricks made from refractory fire-clay, these kilns have effected a saving of 4 to 5 cwt. of coal a thousand, and a reduction in the time of burning from ninety-six to forty hours, the goods being of excellent quality and the waste very small.

In burning lime the economy of the kilns is as marked as in burning clay objects, the consumption of coal a yard of lime burnt in them being 1½ to 2 cwt., as against 3½ to 4 cwt. a yard in the ordinary lime-kiln.

Fig. 4831 is a transverse section of John Crossley's *annealing* kiln. Fig. 4832, a horizontal section taken on line 1 1, Fig. 4831. *a a*, the bed of the kiln; *b b*, its side walls; *c*, the covering arch over it; d^1 to d^5, longitudinal flues beneath the bed. Extending across the front of the kiln is the door for placing and removing the sheets of glass. At the back of the kiln gas fuel is

admitted past a regulating valve *e* into the centre flue d^3, and passes from this flue by the branch flues $d^3\times$ to the openings *f f*, in the bed of the kiln at its four corners. Each of the openings *f* is fitted with a slide by which the width of the opening can be regulated and the quantity of gas admitted by it adjusted; *g g* are underground passages by which air can enter the flues d^2 and d^4; it passes from these into the flues d^1 and d^5, and then ascends into the body of the kiln by the four openings *h h*, in the bed in close proximity to the openings *f* by which the gas is admitted; the heated gas thus meeting the heated air is burnt within the kiln and the products of combustion pass away

4831.

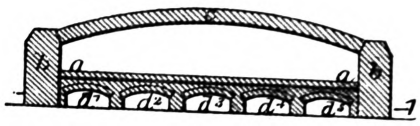

4832.

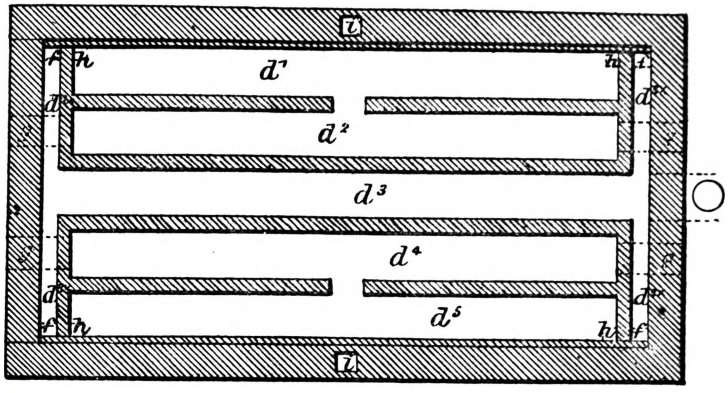

by two side openings regulated by dampers into the flues *i i*, which lead down into an underground passage running beneath the series of kilns to a chimney. Whilst the glass is being placed in the kiln the openings *f* and *h* at the front of the bed are covered with iron gratings, which are afterwards removed. When the kiln is cooling, air is allowed to enter all the flues beneath the bed, and it passes over the bed to the chimney, the rapidity of cooling being controlled by the dampers in connection with the chimney flues *i*, or the air may be allowed to circulate through the flues without passing over the bed of the kiln.

Malt-kilns.—Considerable difference of opinion exists amongst maltsters as to the forms of malt-kilns, and the most suitable material for kiln floors. A good ordinary malt-kiln is shown in Figs. 4833, 4834. The furnace *f* is placed in the centre of the kiln, and is in communication with

4833.

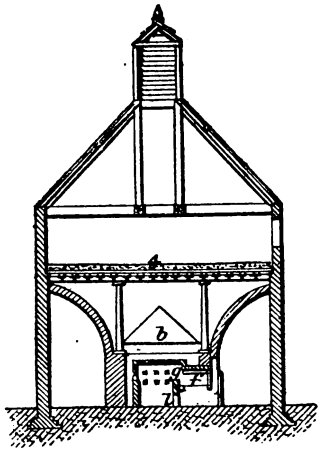

4834.

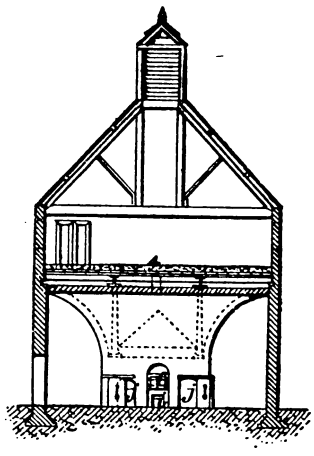

the enclosure or lamp *g*, in the sides and crown of which there are openings for flames and heated air to pass through. The lamp can be cleaned out through the opening *i* communicating with the ash-pit, this opening serving also to admit a portion of the air which it is necessary to apply to the kiln in addition to that which passes through the fire. The opening *i* is, however, of such size that it will admit less than the minimum quantity thus needed, the remainder being supplied through the openings or ventilators J J, which are fitted with sliding dampers, so that the quantity of air allowed to pass through them is under complete control. The furnace is enclosed by walls arched over to the sides of the kiln, and above the lamp is placed the pyramidal distributing plate *b*. This not only serves to equalize the temperature of the various parts of the kiln floor,

but also throws off any coomings or roots which may fall through, and which would otherwise fall upon the lamp and furnace, where they would accumulate and take fire, giving the malt on the kiln a singed taste. The floor of the kiln is formed of cast-iron plates,—the 18-in. square pattern with oblong holes. The pillars, plate-bars, and girders supporting the floor of the kiln are also of cast iron.

Fig. 4835 is a form of kiln which is extensively used. In this kiln the fire is at one side, and the crown of the arch over it is about 3 ft. 6 in. above the highest part of the fire-grate, so that there is ample space for the passage of air. The quantity of air admitted is regulated by a cast-iron sliding plate fitted to the outside opening of the furnace. This plate is not shown in the engraving. In the case of the kiln, Fig. 4835, the fire-grate is about 3 ft. 6 in. long, 2 ft. in width,

4835.

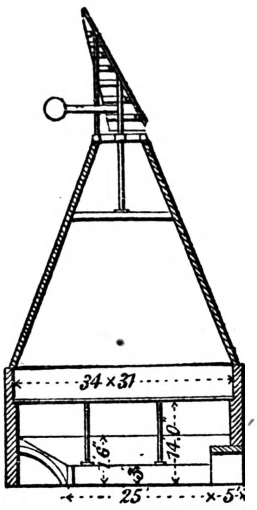

4836.

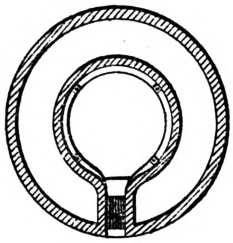

4838.

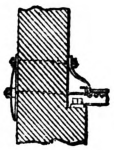

4837.

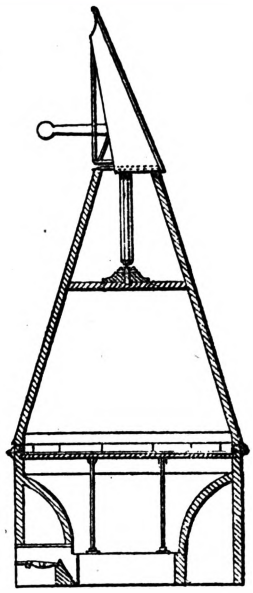

and the bars, the upper sides of which are about 16 in. above the ground level at their highest ends, are laid with a slope of about 4 in. in their length. The heated air from the fire is diffused over the kiln by a disperser plate 15 ft. long and 12 ft. wide, placed 7 ft. 6 in. above the ground level, as indicated by the dotted line. This kiln is for pale malt, and in conjunction with another kiln of the same size, will dry the produce of a 90-quarter malt-house.

Figs. 4836, 4837, are another variety of the circular malt-kiln, as erected by Byran, Corcoran, and Co., of London. It will be seen that in this kiln the lower part as well as the dome is circular, and this form, combined with the arrangements of the fire and the arches enclosing the kiln pit, causes the heated air to pass very equally through all parts of the floor.

In this kiln the dome is of brickwork instead of wood, as usual, being formed by carrying up the sides of the kiln and gradually closing them inwards. In a kiln of this kind for drying off 25 quarters at one time the principal dimensions will be;—

	ft.	in.
Diameter of floor	25	0
„ opening at top of dome	6	0
„ kiln pit	12	6
Height of floor above grate level	12	6
„ dome	38	0
„ cowl	19	0

The floor of a malt-kiln should have an area of not less than 20 sq. ft. for every quarter of malt to be dried on it at one time; but this area, which would require the grain to be spread upon the floor to a depth of a little over 10 in., will have to be considerably increased in many instances where a good draught is not available.

Formerly floors used to be largely made of hair-cloth; but this material is now out of date. At present the floors most in use are made of tiles. The tiles for kiln floors are generally cored out or recessed on the under side, so that the small perforations which pass through the tiles extend through a slight thickness of material only. The coring out also greatly reduces the weight of the tiles. The perforations for the passage of air should be clearly formed and perfectly free from any burrs, which would cut the grain. In Scotch kilns the floors are generally made of perforated cast-iron plates, usually 18 in. square, and having the stobs cast in them. The plates are carried by cast-iron bearers having dovetail-shaped ends, which fit into jaws cast on the sides of the main girders, as in Fig. 4839. The main girders are supported by columns at intermediate points, Figs. 4840, 4841. These plates have the advantage of being less brittle than the tiles, whilst, like them, they absorb a considerable quantity of heat, and cause the drying of the malt laid on them to be, to a great extent, completed by a radiant heat only.

Tile floors are very safe floors, as from the limited area of their perforations they render it

almost impossible to merely air-dry the malt; but on the other hand they retain so much heat that if the fire is allowed to get too high, there is a danger of the malt becoming scorched. Another

4839.

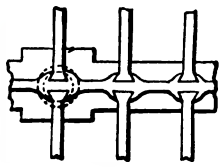

4840.

4841.

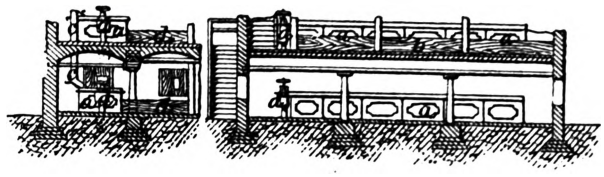

material which has been largely used for kiln floors is wove wire, and, if properly applied, floors made of this material are very durable. To fix the wove-wire floo , the edges of the wire are laced or sewn to straining bars, and these bars are taken hold of by hooked bolts which pass through the wall of the kiln, as in Fig. 4838, each bolt being provided with a large washer-plate bearing on four courses of bricks. The straining bars are covered by a cast-iron skirting plate. The plate or wire is supported by round bars placed at 2½ in. pitch, these bars resting in half-round holes formed in the upper edges of the longitudinal beams, which are of wrought iron 4 in. deep by 1 in. thick. These beams are carried partly by the walls of the kiln and partly by cast-iron cross-girders, in their turn supported at intermediate points by columns. The use of the round bars immediately beneath the wove wire leaves almost the whole area of the latter clear for the passage of air, and there is less chance of dust or dirt lodging on the round bars than there would be on bars flat on their upper edges. Wire floors require to be well protected from rust, and probably the best method of preserving them is to cover them, when not in use, to a depth of about 8 in., with oat husks or with dry straw to a depth of about 18 in. A peculiar kind of wire gauze for kiln floors has recently been introduced by Morton and Wilson, of London. This gauze, after being wove, is passed between smooth steel rollers, which have the effect of indenting the intersecting wires into each other, and thus producing a perfectly level surface, on which the shovelling and turning of the malt can be very readily performed.

Wire gauze can sometimes be advantageously employed for equalizing the draught at different portions of a kiln. For this purpose sheets of the gauze must be suspended beneath the floor at those points at which the draught is strongest, the size of the gauze being regulated according to the amount of checking effect which it is desired to produce. Punched wrought-iron plates are sometimes used as a substitute for wove wire for kiln floors, and on the Continent large quantities of such plates are employed.

In considering the qualifications of different kinds of kiln floors it must be borne in mind that the advantages or disadvantages of any particular kind of floor may be materially modified by the nature of the draught available, and the means provided for regulating it. If the ventilation of a kiln is under thorough control, good malt may be produced on any of the floors we have mentioned. The opening at the top of a malt-kiln is provided either with a revolving cowl, as in the case of the kiln, Fig. 4835, or with a short shaft or cupola, fitted with louvre boards, as in Figs. 4833, 4834. This latter plan is the cheaper of the two; but the cowl, if properly constructed, is probably the most effective in excluding down draughts of cold air. If, however, the cowl is not made so as to move freely it may cause the very effects that it is used to prevent. Cowls are generally made of wood; but a great many copper cowls have been erected, and from their lightness and cheapness they are to be recommended. Cowls may also be made of galvanized iron or of zinc, but these materials are far less durable than copper.

The opening at the top of the kiln should be of sufficient size to carry off freely the moisture arising from the malt, and the area of opening necessary to do this will depend to some extent upon the draught available. To improve this draught as much as possible all apertures opening into the dome should be well fitted, so that they may be closed perfectly, and the dome itself should be of good height. Generally, with a fair draught, an opening equal to from one-thirtieth to one-thirty-fifth of the area of the kiln floor will be found sufficient; but Corcoran and Co. give a much larger opening, that of the kiln, Fig. 4835 being about one-eighteenth of the area of the floor.

The fuel used in a malt-kiln should be free from sulphur, as although the sulphurous acid generated by the combustion of such sulphur may, by its bleaching action, sometimes improve the appearance of the malt, yet it decidedly injures its quality, and lessens its value to the brewer. Well-made coke and good anthracite both make excellent fuel for malt-kilns; a ton of the former dried off in a well-constructed kiln about 50 quarters, and a ton of the latter, 55 quarters of malt.

As we have stated, the heat at which malt should be dried depends upon the character of the malt; the lower the temperature of the heated air the malt is dried with, the plumper and more productive is the malt, but for fulness of flavour a higher temperature is required. The important point in properly kiln-drying malt is to pass a volume of heated air through the malt to convey away the vapour through the cowl or cupola at the top of the kiln. This is well effected by Thos. Bright's kiln and hot-air apparatus, Figs. 4842 to 4846, which prevents cold and unequal currents, and supplies an unlimited quantity of pure heated air.

Fig. 4842, a plan of cold-air flues under the chambers. Fig. 4843, a plan showing grate-bars and smoke-pipes. Fig. 4844, sectional elevation, with side wall and slope removed. Fig. 4845, cross-sectional elevation. Fig. 4846, transverse sectional elevation.

The heat in the kiln pit, until the steam is well off, should not exceed 100. If a high heat be

applied when the malt is moist, it impairs the flavour and soluble properties of the malt, and that portion of the gluten unconverted becomes so fixed as to render the otherwise friable matter, hard and difficult of solution in the mash tub. Bright's kiln prevents overheating by being supplied

4842.

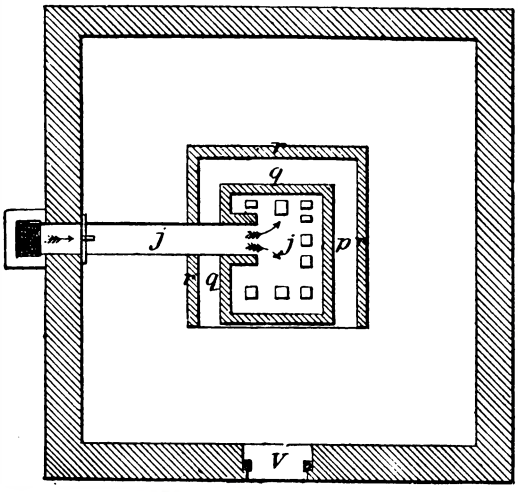

4843.

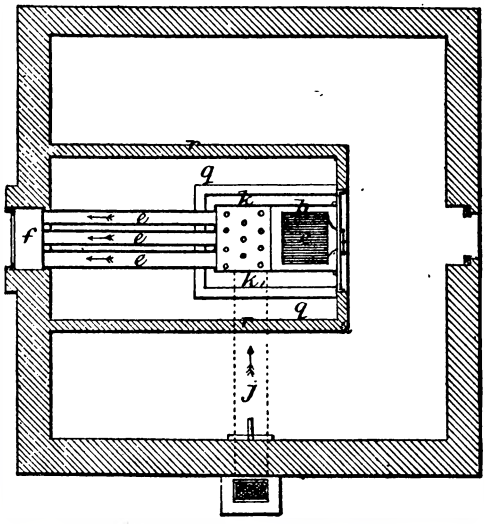

4844.

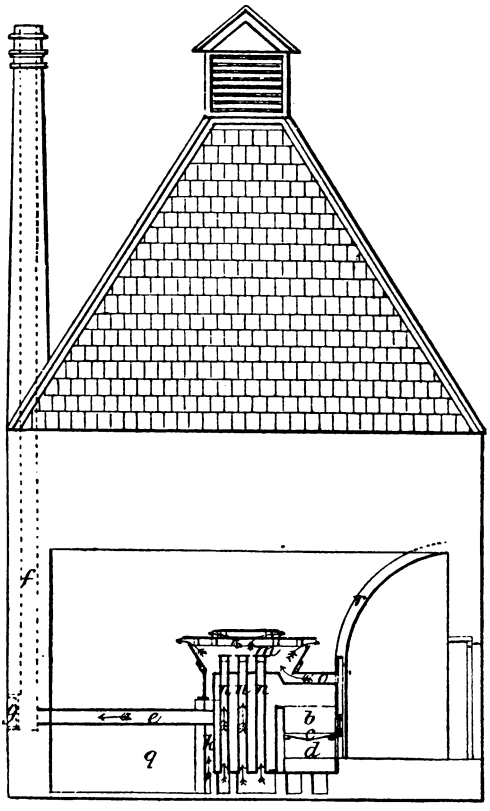

4845.

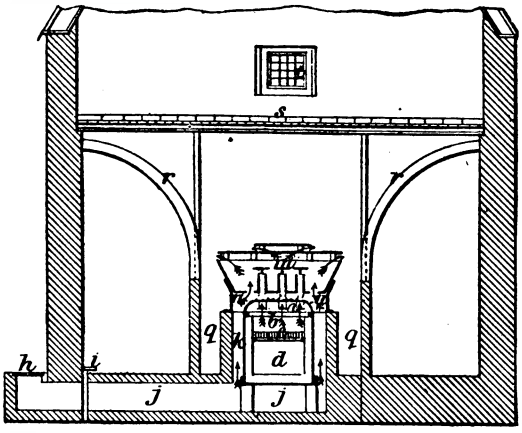

4846.

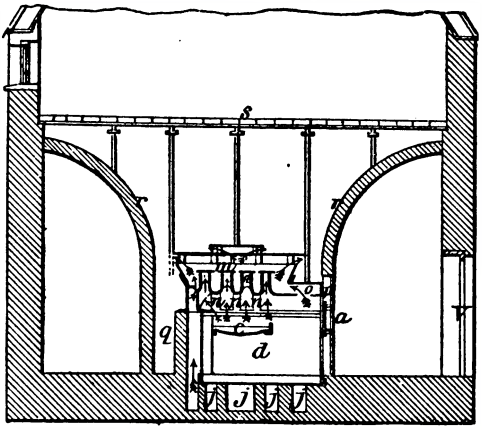

with air heated to the temperature required, which can be regulated at the will of the maltster. Pale malt requires but once turning on this kiln, and the difficulty of drying it is considerably decreased.

The kiln is not affected by rough weather; and will always ensure a regular and well-dried sample of malt or hops.

a, doors on fire-place; *b*, fire-place; *c*, grate bars; *d*, ash-pit; *e*, pipes or smoke flues for bituminous coal; *f*, chimney stack; *g*, doors to open for cleaning smoke pipes or flues; *h*, grating on cold-air flues; *i*, damper on cold-air flues, to regulate the air admitted into the flue; *j*, cold-air flue to chambers; *k*, chamber on the sides and back of fire-place; *l*, doors on openings into chamber round fire-place; *m*, chamber over the fire-place for generating hot air which passes through the openings in and under the covers in the direction shown by the arrows to the space under the kiln floor; *n*, connecting pipes from chamber *k* at the sides and back of fire-place to the chamber *m* over the fire-place; *o*, opening over fire-doors to admit cold air into chamber *m*; *p*, slide to regulate the air admitted to chamber *m*; *q*, square for malt dust; *r*, slopes under kiln floor; *s*, perforated kiln floor; *t*, window; *u*, cupola on top of kiln for the discharge of the vapour arising from the goods drying; *v*, doors into bottom of kiln.

Figs. 4847 to 4849 are of Don, Smith, and Horsfield's kiln, for drying grain seeds and similar products.

The peculiar feature in this kiln consists in the employment of a number of steam-pipes fixed one above another, round which the grain is constantly moving in a thin layer. It is by this means dried rapidly and with evenness; and the possibility of burning or scorching, which on the old system of drying could scarcely be avoided, is prevented.

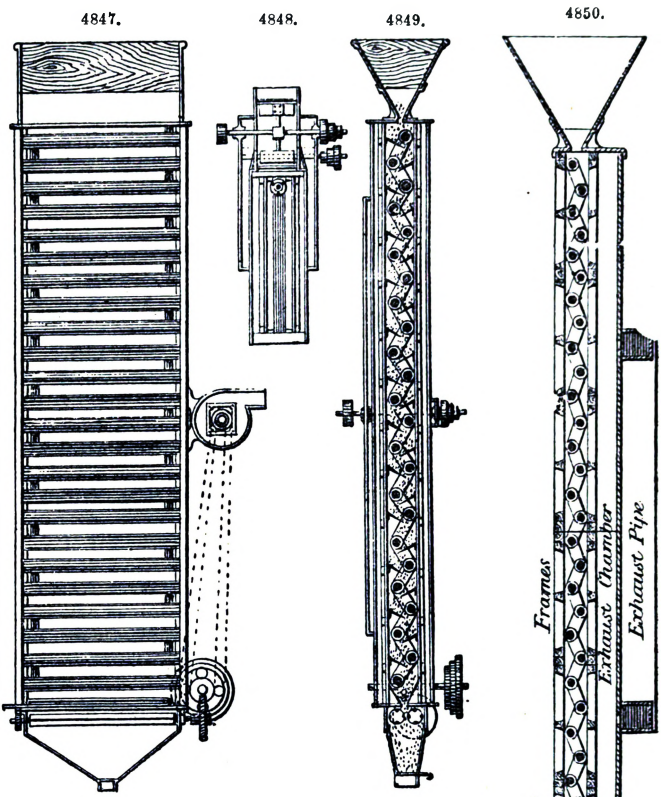

The action of this kiln is as follows;—The wheat or other grain passes into a hopper at the top, and gradually works its way round the pipes in its descent, being kept in contact with the steam-pipes by a ceiling of perforated zinc on each side, at the same time a current of air is drawn through and among the grain while in motion by a powerful exhaust-fan, fixed to the apparatus which carries away all the moisture as fast as it is evaporated from the heated grain, and thus greatly facilitates the drying and improves the grain; so that by the time it arrives at the bottom where it is delivered into sacks or elevators the grain is cool and dry, and ready for immediate use, or to retain in store.

This kiln is well adapted to the drying of Egyptian and Black Sea wheat or other grain that has been washed for the purpose of freeing it from clods of earth, and impurities, and for sweetening and mollifying grain injured by salt water, heated in the hold of the vessel during its passage; or found to be too dry and flinty for grinding purposes.

Don's kiln is a most valuable machine when English or other grain has been injured by bad harvesting; for by being passed a few times through this apparatus, any damp, soft, or musty wheat can be dried and greatly improved by the exhausted air alone.

Fig. 4850 is a view of one of Don's kilns, erected on metal standards by the side of a wall. The pipes were 1½-in. steam-tubes placed zigzag, and the upright sides of the kiln composed of a series of frames, the inside of the frames next the tube space being covered with wire cloth; perforated sheet zinc or copper pierced sufficiently with small holes would do as well. The object of this arrangement is to let the air pass through, but to prevent the grain from passing. In the lower box is a grooved roller which regulates the speed as it revolves faster or slower; it also regulates the time of drying the grain by retarding or quickening its passage through the kiln. The lower box contains in addition a worm or screw to convey the grain for delivery at one end of the box after it has passed the regulating roller. The exhaust-chamber is in this case placed on one side of the kiln, the other side being open to allow the air to pass through and cool the grain, and convey the steam evolved from it. This steam is drawn into the outer exhaust-spout, which is connected to the eye of the exhaust-fan, and from the exhaust-spout to the outside of the building.

Fig. 4851 is an elevation of a pair of the kilns erected for drying peas and maize; the fan is here shown as driving the air and moisture from the kilns. There are two elevators, one to lift the

4851.

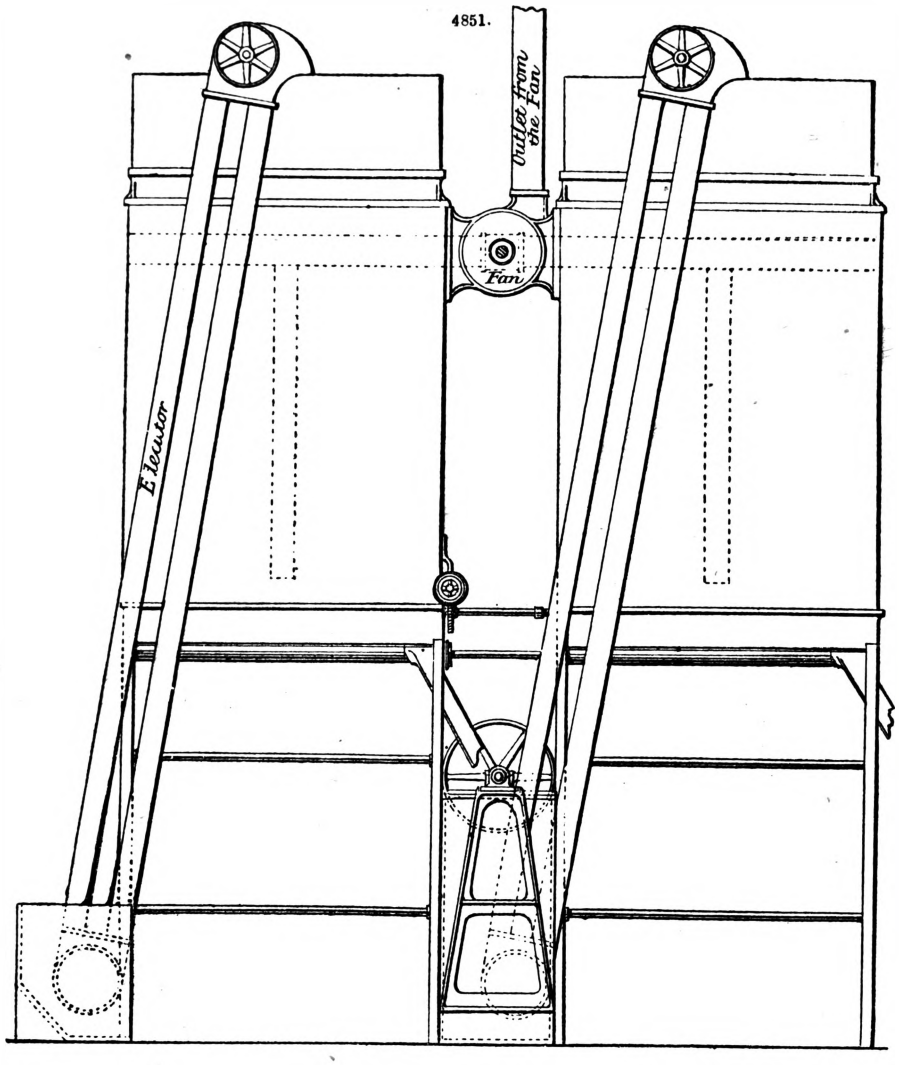

grain from the floor to the top of the first kiln, the other to raise and deliver it to the second kiln. The articles thus pass through both kilns; this is necessary, as peas require to be partially baked. The pair of kilns from which our drawing was taken dry 10 quarters of peas in an hour.

KING-POST. Fr., *Poinçon*; Ger., *Hangesäule*.

e Construction, p. 1030. Joints.

KNIFE-EDGE. Fr., *Couteau*; Ger., *Schneide*.

See Balance.

KNITTING MACHINE. Fr., *Machine à tricoter*; Ger., *Strickmaschiene*.

The nature of the structure of knitted web is shown in the magnified diagrams, Figs. 4866, 4867, which represent a back view and side section of knitted web; it will be seen that one thread here does duty for both warp and weft, and is itself woven direct from the bobbin into a web consisting of rows of loops, the loops in each row being drawn through those in the row immediately preceding. In hand knitting this action is performed either by the ordinary knitting pins or by the crochet hook, and in both cases each loop is separated and individually made complete; or, as in the case of the old framework-knitter's frame, each row of loops is made by a hand apparatus, and then drawn through the previous row at one operation.

In most knitted articles it is necessary that, during the process of making the web from the thread or yarn, it should also be shaped at the same time that it is made. This is one great peculiarity of the hosiery manufactured, that shaped wearing apparel, comprising the numerous descriptions of under-clothing, is produced direct from the yarn at one operation of the machine, and without the intervention of the tailor or milliner; and the weaver of calico, cloth, or other such fabrics, will hardly realize at once the amount of detail which this peculiarity involves in the manufacture of hosiery, to suit all the different shapes and qualities required, entailing as it does the necessity that the machines employed shall be easily adapted to make articles of very

good variety of shapes, thickness, and degrees of elasticity. The framework-knitter's old hand-frame, which has for so many years been almost the only apparatus commercially employed in manufacturing knitted wearing apparel, though now doomed to the same fate as many other clever contrivances of former years, is even yet in the Midland district in England the means of producing the larger part of the hosiery made.

The self-acting machine for knitting hosiery by power, invented by Arthur Paget, and described by him before the Inst. M. E. in 1870, is shown in general elevation and section in Figs. 4852, 4853, and its construction and action will be better understood by confining the attention at first to the five primary parts which actually manipulate the thread in knitting it into web.

4852.

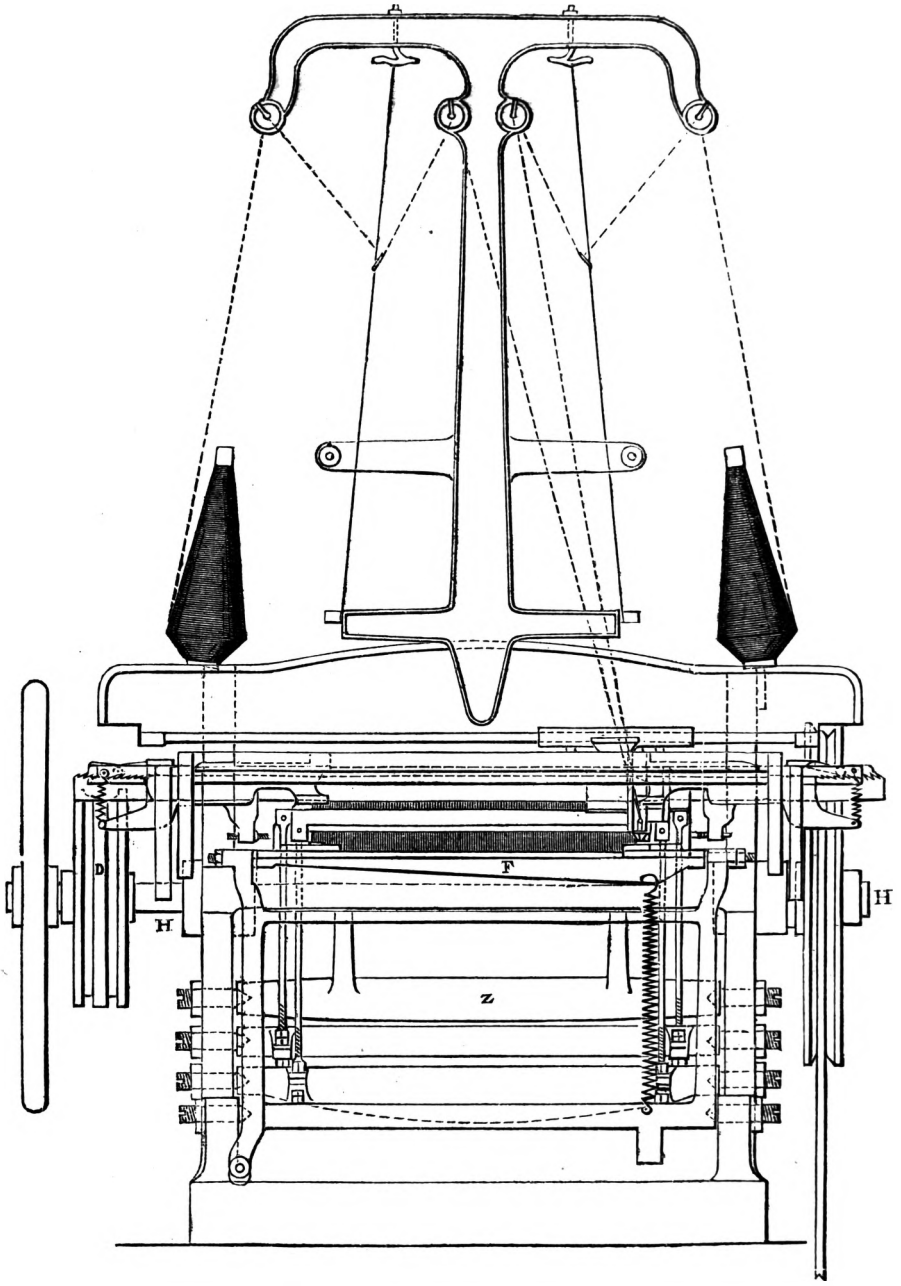

These are shown half size in Fig. 4854, and enlarged details are given twice full size in Figs. 4856 to 4863. The five primary parts are the thread-tube delivering the thread, the sinker, the needle, the knocking-over bit, and the coverer. The action will first be explained of these five primary parts which manipulate the thread, and then of the secondary parts which effect the movements of the primary parts.

Knitting.—In the making of the web, as contradistinguished from narrowing or shaping it, the

four first-mentioned of the above primary parts are employed, the cover being used only when narrowing; and the successive stages in the process of making the web are shown in Figs. 4868 and 4875. The needles are all arranged side by side in a row as wide as the greatest width of the article to be knitted, as seen at N in Figs. 4865, 4866, and above and between the needles is a projection or web upon each sinker S, each of which has its lower end or tail projecting downwards through the space between the needles. Above the needles is a projection or web upon each sinker, Fig. 4865, under which the thread is laid upon the needles by the thread-tube T traversing from side to side in the machine. The knocking-over bits K are arranged between the needles one behind each sinker, their tops projecting slightly above the needles.

To commence working, a piece of knitted web is generally put upon the needles, with one loop on the stem of each needle N, as in Figs. 4866, 4867; these loops are placed immediately behind the tails of the sinkers S, and in front of the face of the knocking-over bits K, as in Fig. 4863. The thread-tube T is then caused to make its traverse, lying the thread across the stem of the needles and underneath the webs of the sinkers. Each sinker then descends in succession, or technically speaking sinks between the needles, the web

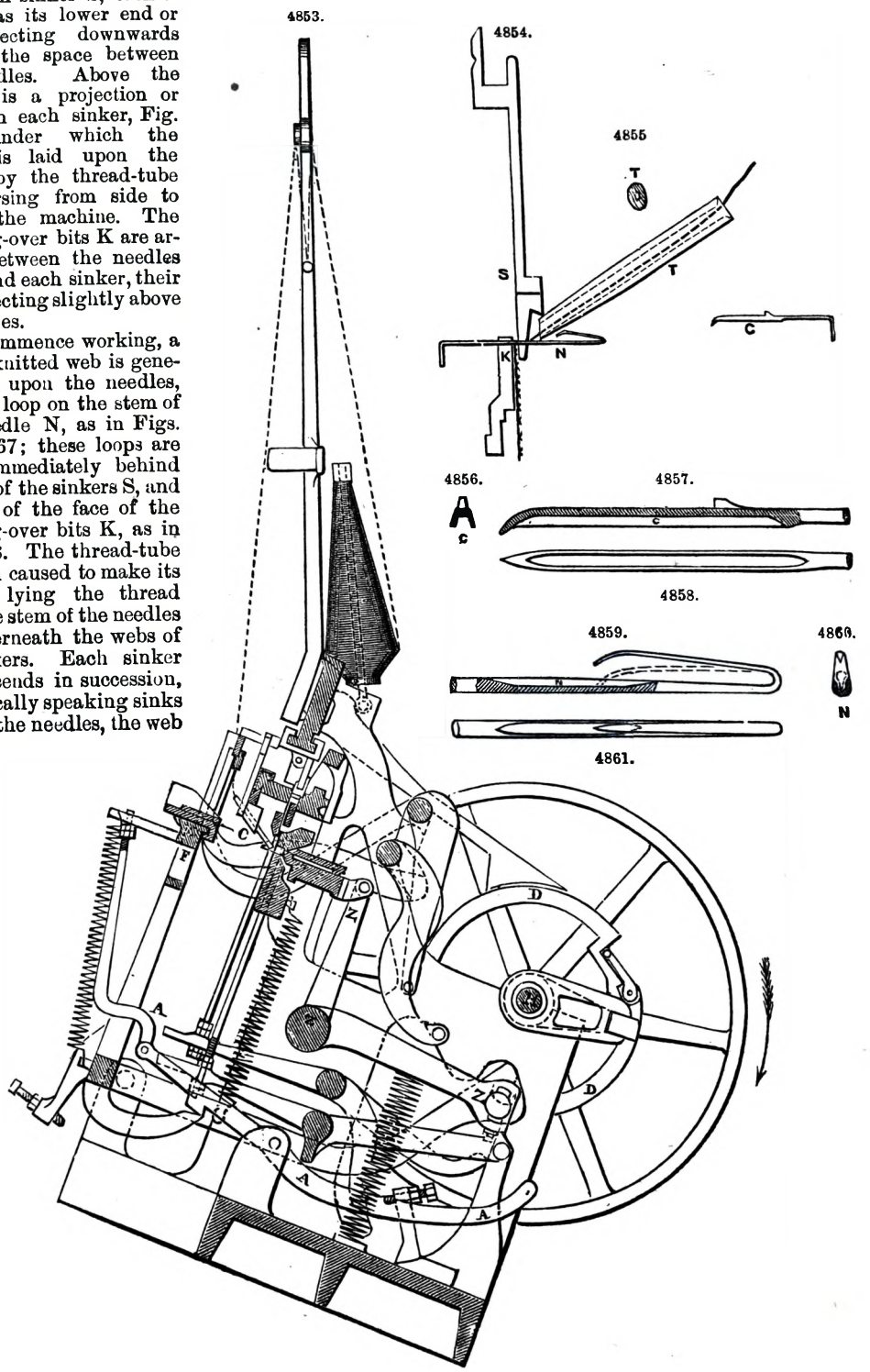

carrying down with it a loop of the thread; in this way a series or row of loops is formed, hanging on the stems of the needles, as in Fig. 4869. The curve of the sinker incline A, Fig. 4865, which depresses the sinkers in succession as it traverses across the machine, is made of such a form that each sinker has fully completed its descent or sunk its loop, before the web of the next one comes down upon the thread. If this were not done, the thread would have to be drawn up by the one sinker under the next one, while the latter was pressing on the thread; and as most hosiery

threads are only slightly twisted, and consequently of very little strength, the thread would be injured by such a tension upon it. When the thread-tube T arrives at the end of its traverse, that is, when the required width of needles has been passed over, it descends and carries the thread down between two of the needles, as in Fig. 4869, thus forming the loop of the last or selvedge needle without the aid of the sinker. The whole row of needles then retire or are drawn backwards, as in Fig. 4870; and the ends of the hooks, technically called the beards of the needles, pass over and enclose the loops just formed by the sinkers.

The presser-bar B, Figs. 4864 and 4871, now descends; and being made with grooves in its face

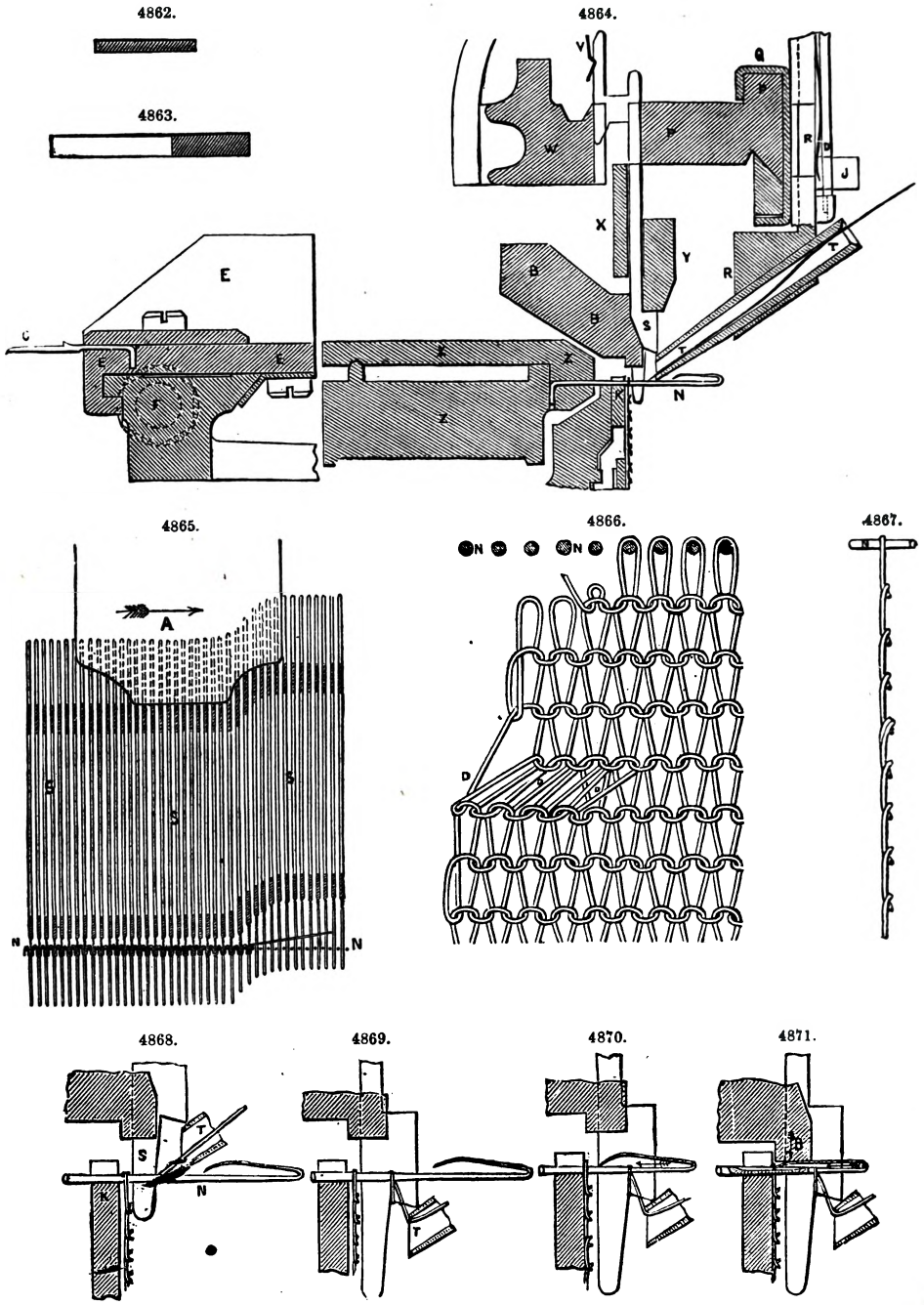

through which the sinkers slide, the walls of these grooves press the points of the beards of the needles into the grooves in their stems, as seen in Fig. 4871, and dotted in Fig. 4859. The needles then retire still farther, the new loops being still round the stems and under the beards of the needles, while the old loops now slide over the beards, as in Fig. 4872, and the presser-bar B is raised again as soon as the points of the beards have fairly entered the old loops on the needles,

Fig. 4872. The needles, still continuing to retire, draw the new loops which are under the beards up to the old ones which are over the beards, and then draw the new loops through the old ones, the latter being held by the knocking-over bits K, as in Fig. 4873. When the needles next advance, the old loops draw down below the heads of the needles, as in Fig. 4874; this process is called knocking over the loops, and to ensure its being thoroughly done and all the loops well bevelled, in length, the needles are made to retire a second time, and thus draw the loops again tight against the face of the knocking-over bits. The needles then advance, and the sinkers S descend, as in Fig. 4874, so that the tails of the sinkers keep the loops behind them, while the needles continue to advance and their stems slide forward through the new loops, as in Fig. 4875, until they have reached again their former position, shown in Fig 4868. The thread-

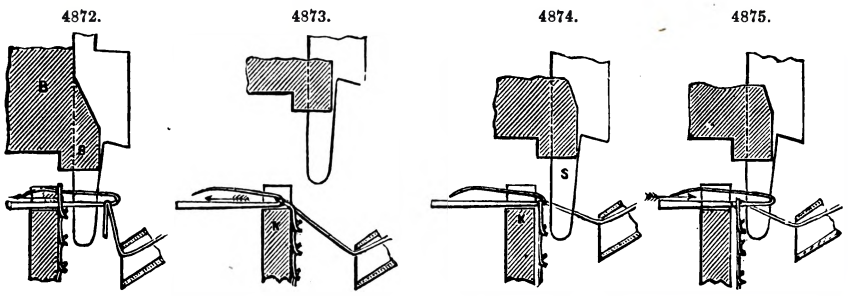

tube T now descends between the same two needles between which it previously descended; and all the parts assume the position they were in before the commencement of the knitting this first row of loops, as in Fig. 4868, with the exception that the thread-tube is now at the other side of the machine. The same process is then repeated, the thread-tube now lying the thread across the needles from left to right, instead of from right to left as before; and thus the knitted web is increased successively by adding a row of loops, called a course, alternately from left to right and from right to left, one course being added for each revolution of the cam-shaft of the machine.

Narrowing.—For narrowing the knitted web in order to shape or fashion it, the simplest method would seem to be merely to stop the traverse of the thread-tube one, two, or more needles earlier than before, and so make the web narrower on one or both sides. But if this were all that was done, the loops on the needles so left beyond the traverse of the thread-tube would in the next course be pushed off the needles and dropped; and, as will be seen from the diagram, Fig. 4866, a dropped loop or stitch in knitted web runs down as it is termed, and produces a defect or kind of elongated hole commonly called a ladder. To avoid this defect it is necessary to secure the loops which would thus be pushed off the needles and dropped; and the method employed to effect this is identical, as far as the construction of the web is concerned, with that used for many years by the framework knitters. This method consists in narrowing the web at certain intervals by two needles at a time, the intervals or number of courses between each narrowing being regulated so as to produce an approximation to the curve desired, as, for instance, in the leg of a stocking, so as to fit correctly. The approximation is used, because if the web knitted were rigid and inelastic the shape produced would really be narrowed by a series of sudden steps instead of being a suitable curve; but as the knitted web is thoroughly elastic, the steps are not perceptible, and the result is a well-shaped stocking or other article. The essential principle of the narrowing is that the two loops to be narrowed are removed from two needles at the edge of the web, and are transferred to the two needles next to them and nearer to the centre of the machine. Thus these two needles have each two loops upon them, and one of the loops in the next row of knitting is then drawn through each of these pairs of loops, exactly as before described in making web; by this means the loops, which would otherwise have run down, are held secure. But as this pair of double loops produce a slight thickening and distortion of the web wherever they occur, and as it is considered a point of great importance to avoid even the slightest irregularity of the selvedge, it is usual to transfer four loops instead of only two, and to move them all four a distance of two needles sideways, as before described; thus the two loops nearest the selvedge are left single and perfect, and the thickening is produced in the next two loops, as shown at D in Fig. 4866. Instead of moving four loops, any other number might be moved; and instead of moving the loops two needles sideways at a time, they might be moved only one needle at a time; but the ordinary work is four loops moved and two needles narrowed. The transfer of the four extreme loops on either side of the knitted web for the purpose of producing a narrowing, is effected by means of the coverers, shown at C in Figs. 4854 and 4864. These are small pointed instruments, having each a groove on the under side, as in Figs. 4856 to 4858, by which the needle head and beard can be covered. Four of these coverers, fixed at the same pitch or gauge as the needles, are carried in a small slide E, Figs. 4864 and 4885, which slides upon the rocking slide-bar F extending across the machine in front of the row of needles; there is one of these slides at each end of the bar, the four coverers being opposite to the four outer needles on each side of the knitted web. When a narrowing is to be made, the coverers advance together towards the needles until the points of the coverers C reach a little over the point of the beards of the needles N, as in Fig. 4876, at the same time the sinkers S are lifted up. The coverers are now depressed at the points or tilted downwards, so that their points enter into the grooves in the stems of the needles, and they cover and press down the beards of the needles, as in Fig. 4877. The needles and coverers then retire together, and the points of the coverers enter into the loops on the needles, Fig. 4877. The loops slide along the coverers as these continue to retire with the needles, being held forwards by the face of the knocking-over

bits K until the heads of the needles have retired behind the face of the knocking-over bits, as in Fig. 4878; in this way the loops are slipped off the needles and transferred entirely to the coverers, on which they hang, as seen in Fig. 4878. The coverers are next elevated at the points, or tilted upwards, Fig. 4879, so as to be clear of the needles and the knocking-over bits.

They are now traversed laterally, or, technically speaking, shogged, a distance of two needles towards the centre of width of the web, carrying with them the four loops they have picked up, and they are then depressed again upon the heads of the four needles over which they have now been brought, as in Fig. 4880. Of these four needles the two outer have no loops under their

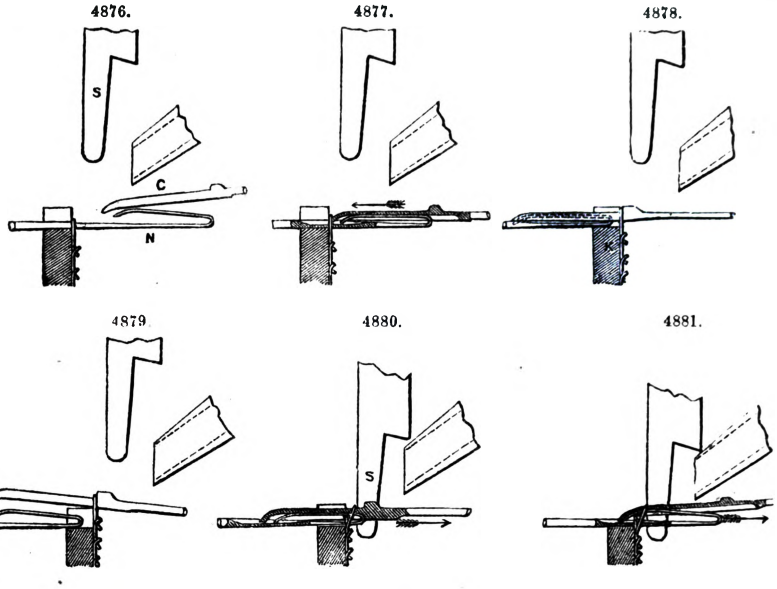

beards, while each of the two inner ones has a loop hooked under its beard, as shown in Fig. 4880 The sinkers S now descend, and the needles and coverers together advance; and the loops being held back by the tails of the sinkers, slide along the coverers as these are withdrawn, Fig. 4880. The needles and coverers continue to advance together, until the loops slide off over the points of the coverers, as in Fig. 4881, and are thus again transferred from the coverers to the needles. The coverers then retire to the position they were in originally, as seen in Figs. 4864 and 4885. This narrowing operation is performed usually on both selvedges of the web simultaneously, and at the same time the length of the traverse of the thread-tube T is reduced to two needles narrower on each side of the machine in the manner that will be subsequently described.

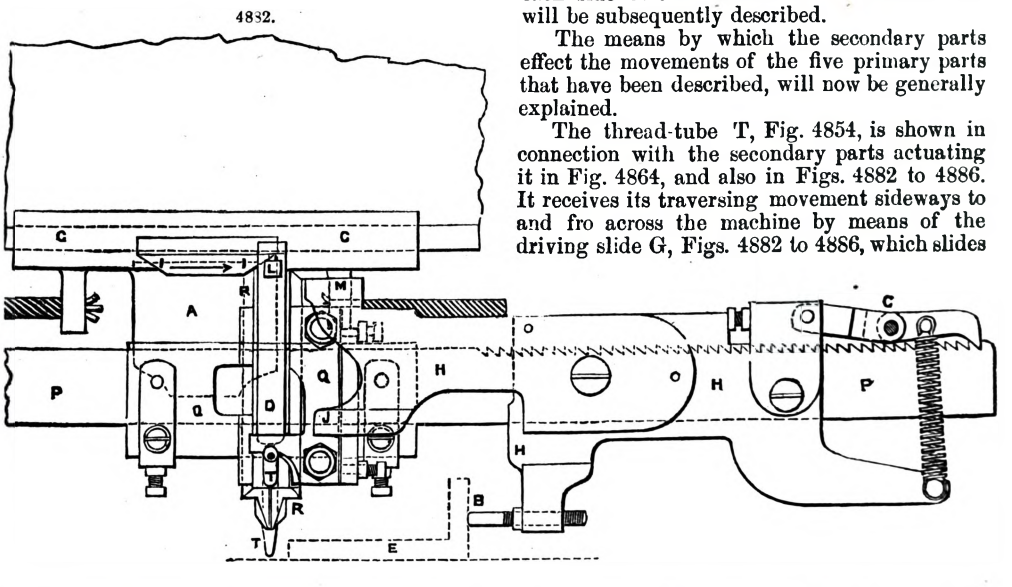

The means by which the secondary parts effect the movements of the five primary parts that have been described, will now be generally explained.

The thread-tube T, Fig. 4854, is shown in connection with the secondary parts actuating it in Fig. 4864, and also in Figs. 4882 to 4886. It receives its traversing movement sideways to and fro across the machine by means of the driving slide G, Figs. 4882 to 4886, which slides

along the top bar of the machine, Fig. 4852. This slide has a cord attached to it at each end, and the two cords are led round guide-pulleys and brought together at the left-hand side of the machine to a double-grooved pulley D, Fig. 4852, called the drawing-across pulley, which is carried on the left end of the cam-shaft H of the machine. In Figs. 4887 to 4891 are shown side views of the pulley, and in Fig. 4890 a back view. Each cord has an iron bob at the end, and in Fig. 4887 the right-hand cord-bob is shown just ready to be taken hold of by the notch J that is made across the two

grooves in the pulley. As the pulley revolves, this notch takes hold of the cord-bob and thus draws round with it the cord, as in Fig. 4888, thereby drawing also the driving slide G, Fig. 4882, towards the right-hand end of the machine. Meanwhile the other or left-hand cord-bob has been drawn up to the periphery of the pulley, Fig. 4888, but not until after the notch has passed it, so that it is not taken hold of during this revolution. When the pulley has revolved further, as in Fig. 4879, a stud projecting from the side of the tongue J, which is hinged in the circumference of the pulley, impinges on the fixed incline L, bolted to the frame of the machine, Fig. 4890; the tongue J is thus raised, and throws out or disengages the cord-bob, which falls down into the trough below, thus stopping the traverse of the slide G that is drawn by the cord, Fig. 4882. During the next revolution of the drawing-across pulley it will draw the left-hand cord and then disengage it in the same way when the traverse of the slide is completed. Thus during alternate revolutions, the slide driving the thread-tube is drawn across the machine from left to right and then from right to left. The position of the fixed incline L, Figs. 4887 to 4890, is adjustable for disengaging the cord-bobs at the proper point, according to the length of traverse that is required for the slide G. On occasion of a narrowing having to be made, as the slide G is then required not to make its traverse, the disengaging lever M, Figs. 4890, 4891, is brought up against the side of the drawing-across pulley so as to raise the projecting stud of the tongue J, and hold the tongue up through the length of the arc of the lever, as shown in Fig. 4891; it thus prevents the notch in the pulley from catching the cord-bob in this revolution of the pulley. When the narrowing is completed, the lever M is withdrawn again, as shown by the dotted line in Fig. 4890, and is then clear of the stud on the tongue J.

The slide G, driving the thread-tube T, Figs. 4882 to 4886, carries an incline I projecting in front called the thread-layer incline, which drives with it across the machine the horizontal thread-slide Q, sliding on the bar P that extends across the machine. This horizontal slide carries a vertical slide R, holding the thread-tube T; and the incline I drives the horizontal slide Q by bearing against the inclined top of the vertical slide R, Fig. 4882, which is held up in its place by a latch D until near the end of the traverse. The latch is then unlatched by an incline J projecting from the thread-layer stop H; but by means of a peg L projecting from the vertical thread-slide R, and resting upon the raised ledge M on the stop H, the vertical slide R is still held up until the moment that the horizontal slide Q is stopped by the stop H. At that same moment the peg L clears the ledge M; and the vertical slide R with the thread-tube T is then driven down between two of the needles, as shown in Figs. 4885, 4886, by the incline I acting upon the inclined top of the slide R. For the return traverse of the horizontal thread-slide Q, the thread-tube and its vertical slide R are lifted again by the thread-layer lifting bar U, Fig. 4885, which extends all across the machine; this lifts the slide R in whatever position across the machine it may happen to be, by means of the peg L projecting forward over the bar. The lifting bar U is carried by the two front arms of the rocking shaft, which has a third arm projecting backwards, and acted upon by a cam on the cam-shaft. The sinkers S, Fig. 4854, are free to slide up and down, and are held sideways at their upper ends in grooves in the front and back bars P and W, Figs. 4864 and 4885. In the operation of knitting they are driven down or sunk, each in succession, by the curved sinker incline A, Figs. 4885, 4886, which is carried by the traversing slide G; the incline A, as it traverses, drives the sinkers down by acting on the upper edge of that portion of them which is between the two grooved bars P and W, as shown in Figs. 4865 and 4885. The descent of the sinkers thus follows closely the laying of the thread by the thread-tube as it traverses across the machine. Each sinker is held from falling, before the sinker incline drives it down, by a sinker spring V, Fig. 4885, which latches it up in that position by taking into the notch at the back of the sinker near the top, as shown in Fig. 4864, and this same sinker spring assists the sinker in falling at the end of its descent, by bearing against the inclined top of the sinker, as shown in Fig. 4885. The sinkers are stopped at the end of their descent by the sinker lifting-bar X, Figs. 4864 and 4885; and they are all simultaneously lifted when required by the same bar, which is itself lifted by a rod at each end passing down to a rocking shaft that is acted upon by a cam on the cam-shaft. The sinkers are all lowered simultaneously when required by the sinker lowering-bar Y, which lowers them by its under edge bearing upon the projection in front of each sinker; this bar is lowered by two rods and a rocking shaft and cam, in somewhat the same manner as the sinker lifting-bar is raised.

The needles, N, Fig. 4854, are fixed in a bar Z at the back, Figs. 4864 and 4885, and rest in front on the upper edge of the knocking-over bar which holds the knocking-over bits K; the needles slide on the knocking-over bar as they retire and advance. The retiring and advancing are effected by a rocking shaft Z, Fig. 4853, the two upper arms of which are joined to the back of the needle-bar, and the one lower arm is acted upon by a cam on the cam-shaft H. The presser-bar B, Figs. 4864 and 4885, which, in descending, presses the beards of the needles down into the groove in their stem, as shown in Fig. 4871, receives its movements from the same rods and rocking shaft that move the sinker lowering-bar Y, the pressing motion of the bar B being effected by a second cam.

The narrowing movements of all the primary parts except the coverer, are produced by the same mechanism that effects the movements for knitting the web, but by a different set of cams on the same shaft. The movements of the coverers in advancing, depressing, elevating, and withdrawing them, are effected by the arrangement shown in Figs. 4852, 4853, consisting of a slide-bar F carried between centres which allow the coverers C to be depressed and elevated at the points by means of a lever A: this lever is also shown in Figs. 4896 to 4901, and is actuated by the cam B. The centres carrying the slide-bar F, Figs. 4852, 4853, 4864, and 4885, are themselves carried in a rocking frame, which allows the coverers to be advanced and withdrawn by a cam for that purpose.

The coverer slides E, Figs. 4864 and 4885, which are also shown by a dotted line E in Figs. 4882 and 4886, are traversed or shogged along their slide-bar F by the pin B carried in the

4883.

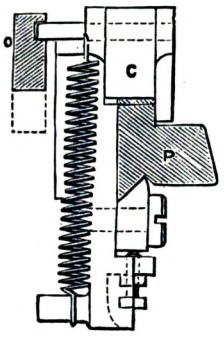

4884.

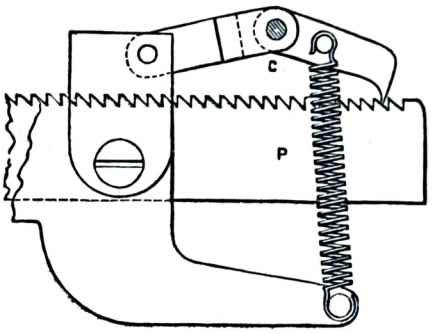

4887.

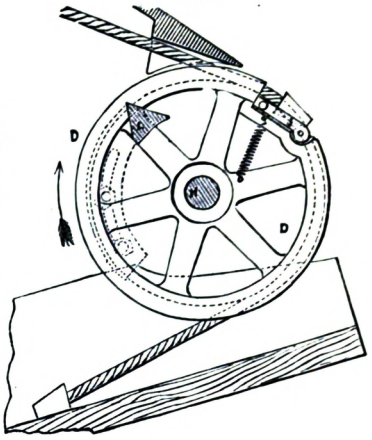

4885.

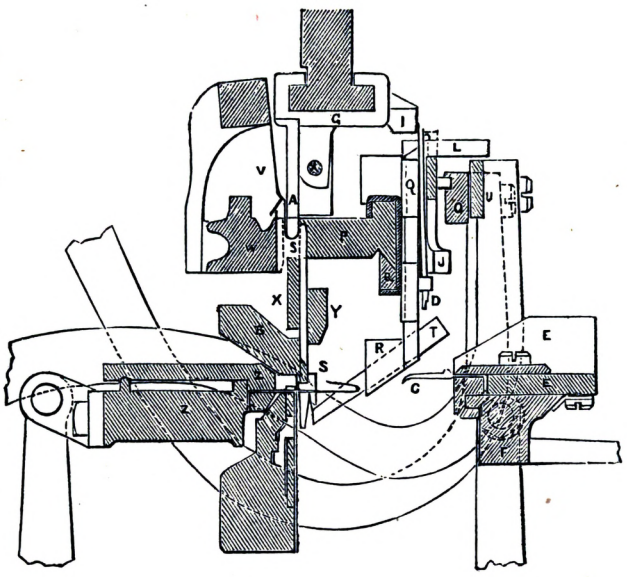

4888.

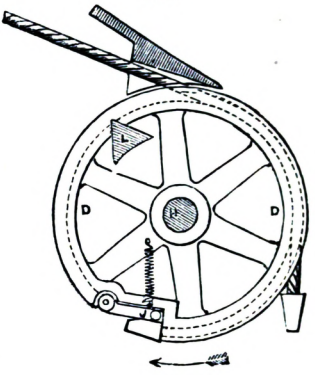

4886.

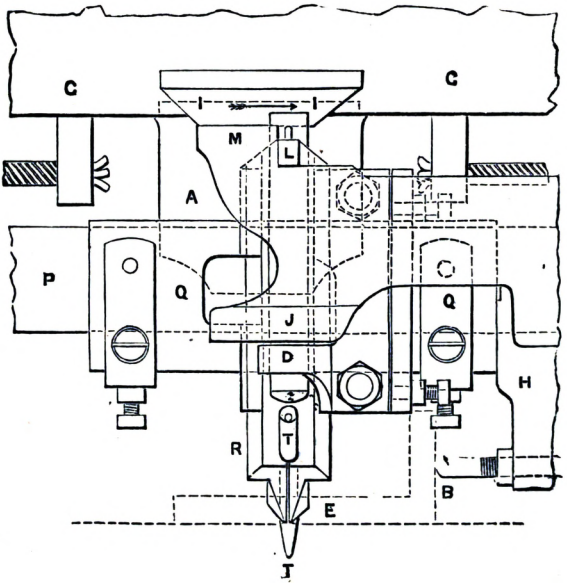

4889.

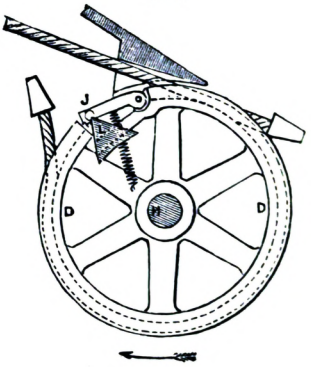

lower part of the thread-layer stop H at each side of the machine; when the coverer slides are in position to be shogged, the pin B abuts against their side and pushes them along the slide-bar

4890.

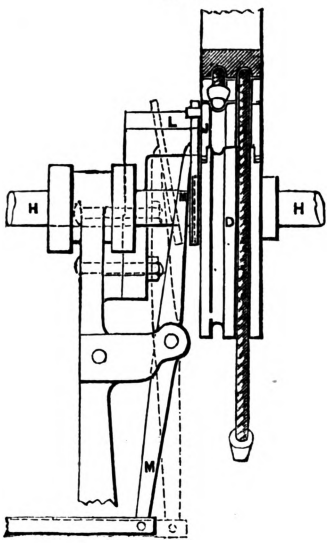

4891.

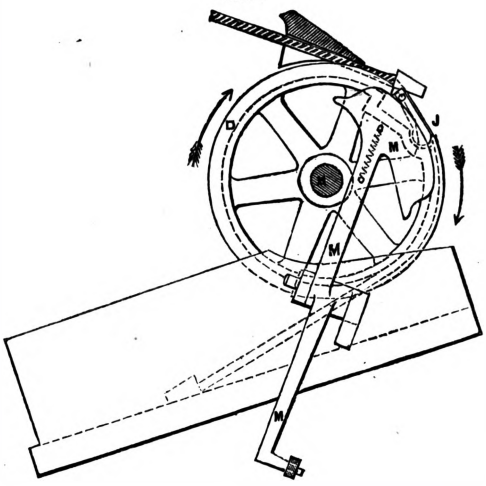

4892.

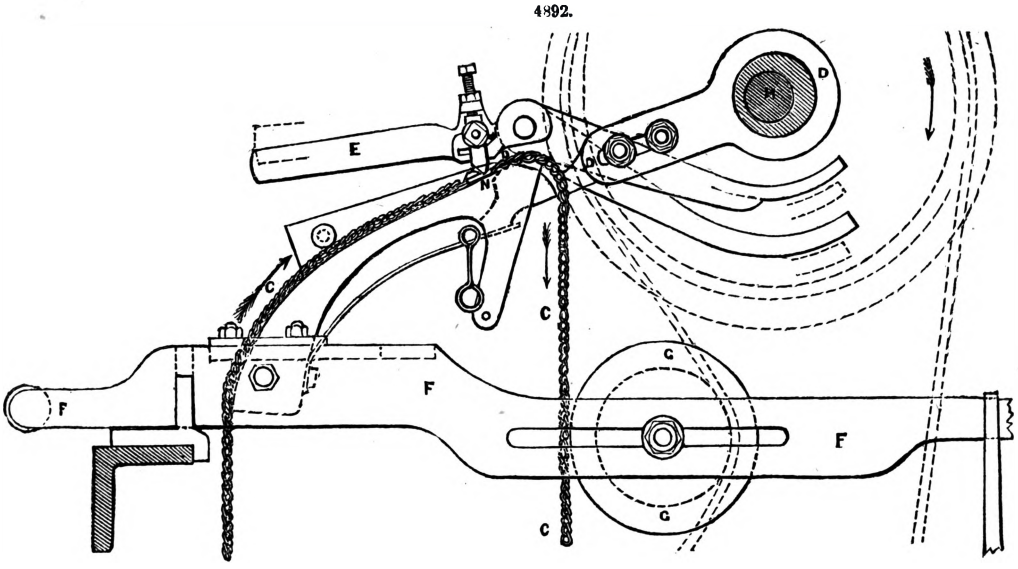

towards the centre of width of the machine. The thread-layer stops H are themselves shogged along the bar P, on which they slide by the action of the shogging ratchet C, Figs. 4882 to 4884. This works as a compound knee-lever into the ratchet-teeth in the slide-bar P; thus when the joint C is lifted, as shown in Fig. 4884, the ratchet takes a tooth, and then when the joint is lowered, as in Fig. 4882, it shogs the thread-layer stop H along the bar P, and thereby shogs also the coverer slide E and the thread-layer slide Q carrying the thread-tube T. The traverse of the thread-tube is accordingly stopped two needles earlier on each side of the machine by the stops H. The lifting of the shogging ratchet C, Fig. 4884, is done by the bar O, Figs. 4883 and 4885, which is actuated by a cam, and lifts the pin of the ratchet-joint; it holds the joint up until the coverer slides E, upon their rocking frame, have been brought into line with the pins B, and the joint is then lowered again by the bar O, whereby the coverer slides are shogged laterally through the required distance. The shape and length of the article that is being knitted are regulated by an endless pitch-chain of peculiar construction which, though believed by the writer to be little used in England, is frequently employed in France, and is called there "chain Vaucanson," after its inventor, the great engineer Vaucanson. This chain, shown at C, in Figs. 4892, 4893, is shown full size in Figs. 4894, 4895. It is drawn towards the cam-shaft H of the machine, Figs. 4892, 4893, through the distance of one link for each revolution of the shaft by means of the eccentric and ratchet D. Immediately above the chain is the narrowing handle E, the lifting of which into the position shown by the dotted lines during one revolution of the shaft H, will cause the machine to make a narrowing during that revolution. The lifting of this narrowing handle can be done by hand, if required, but it is usually effected by a link N inserted in the chain. This link, called a narrowing link, has on its upper surface a projecting incline, Fig. 4894, which, when drawn under

the narrowing handle, lifts it, as shown in Fig. 4898, and thus makes a narrowing in the knitting. Another sort of link S is also shown in Figs. 4894, 4895, called a stopping link, having an incline projection at its side; this link is inserted in the chain wherever it is wished that the machine shall be stopped, and the stoppage is effected by the stopping link unlatching the sliding handle F which carries the tightening pulley G. This pulley pressing against the driving gut of the machine, gives tension requisite for driving it, as shown in Fig. 4892, the stopping handle being latched in that position by the projecting lug I on its side catching against the guide in which it is carried, as shown in Fig. 4893 · but when the stopping link cants the handle, as in Fig. 4895, the

4893.

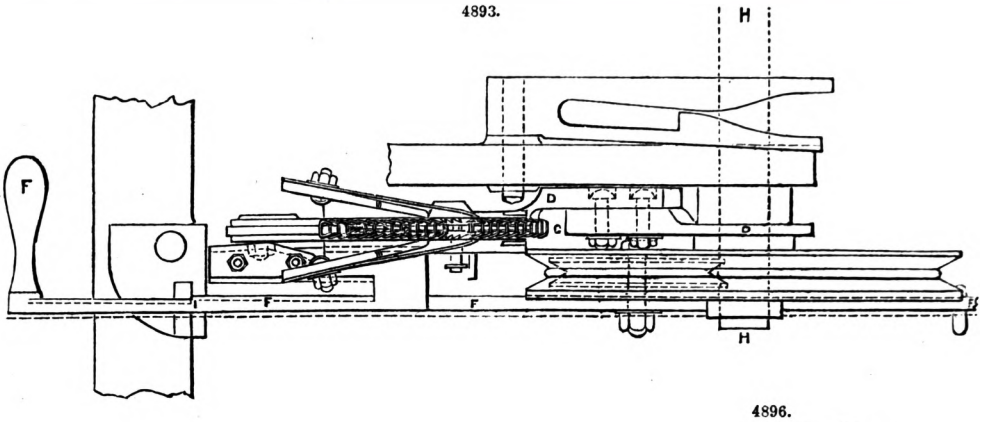

4896.

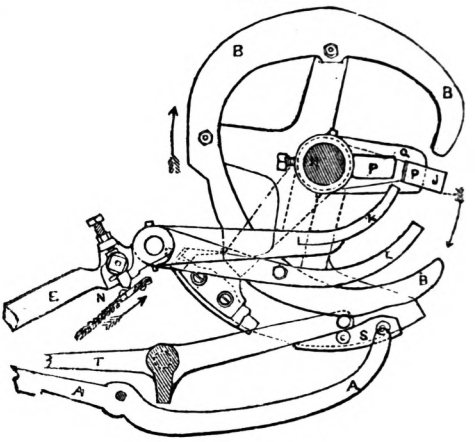

4894. 4895.

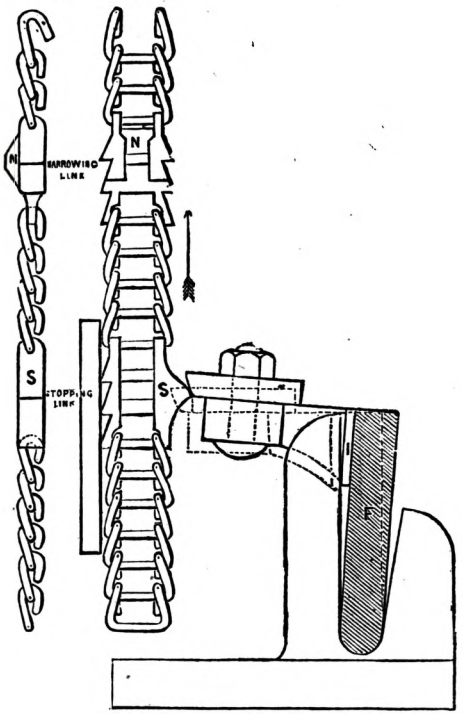

4897.

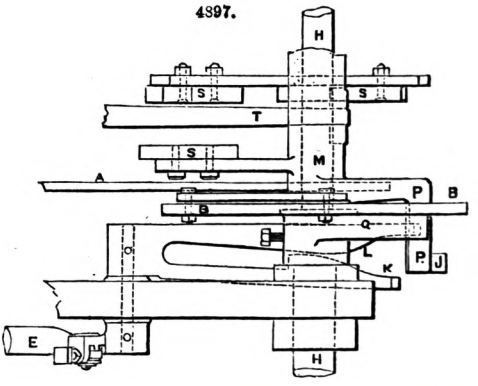

catch I is liberated, and the driving gut is thereby slackened and the machine stopped. Each plain link in the pitch-chain C represents therefore one row of loops or one course in the knitting, and each narrowing link represents a narrowing, and each stopping link represents the completion of the piece to be knitted.

The change of all the movements of the machine, from making web to narrowing, is accomplished by having two different sets of cams mounted on a tube, which is free to slide lengthways upon the cam-shaft, but is driven round with it, as shown in Figs. 4896 to 4901. The several cams are so arranged in their distances sideways along the sliding cam-tube M, that when the cam-tube is at the right-hand side of the machine, as shown in Figs. 4896, 4897, and the back view,

Fig. 4900, the set of cams for web making acts on the various levers and arms of the rocking shafts, while the set of cams for narrowing passes clear on the right-hand side of them. But when the cam-tube M with its two sets of cams is traversed along the cam-shaft H above ¾ in. towards the left side of the machine, as shown in Figs. 4898, 4899, and 4901, then the set of cams for narrowing acts in turn upon the levers and rocking shafts, and thus cause a narrowing. When the cam-tube is traversed back again to the right-hand side of the machine, the making of web is resumed and continued until the cams are again traversed to the left.

The longitudinal traversing movement of the cam-tube is effected by an arm P attached to the cam-tube M, and driven round by the cam-tube driver Q, which is secured upon the cam-shaft H. Below the arm P are a pair of helical inclines K and L, Figs. 4900, 4901, the upper one K for traversing the cam-tube from right to left, and the lower one L for traversing it back from left to right. This pair of helical inclines are attached to an axle of the narrowing handle E, Figs. 4892, 4893, so that when the handle is raised they are lowered, and *vice versâ*. Thus when the narrowing handle is lifted for narrowing, and the helical lowered, as in Fig. 4898, the cam-tube arm P will be acted upon by the upper incline K, as shown in Fig. 4901, and the cam-tube M will be traversed to the left-hand, as in Figs. 4899 and 4901, causing several narrowing cams to

4898.

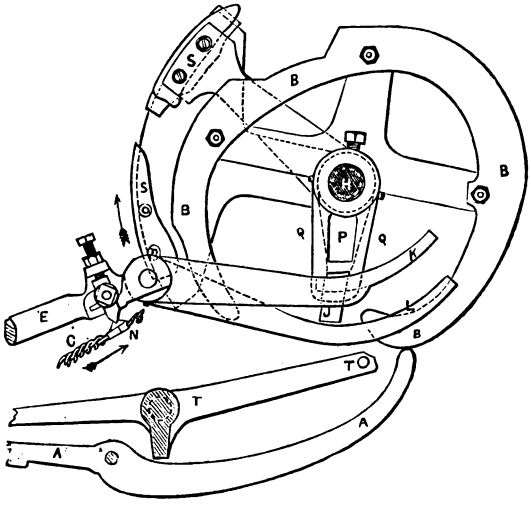

4900.

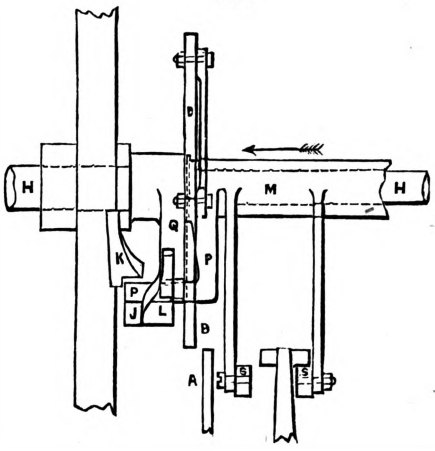

4899.

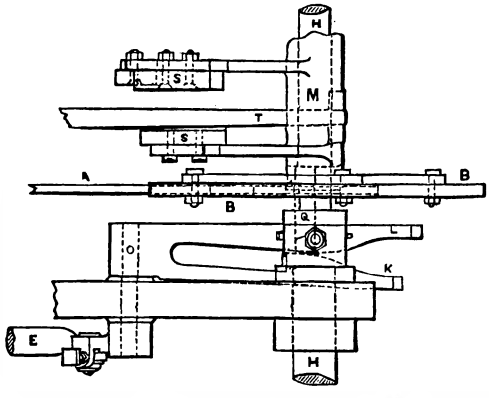

4901.

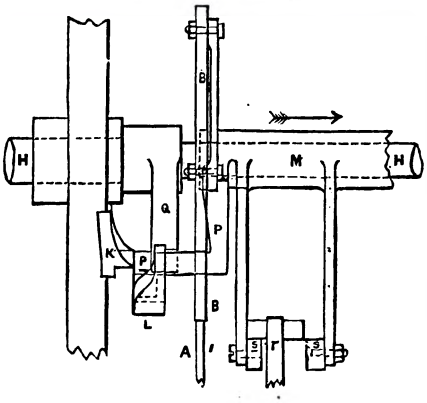

come into action upon their respective levers. If on the next revolution of the cam-shaft H, the narrowing handle is lowered for web making, and the helical inclines raised, as in Fig. 4896, the lower incline L will then come into contact with the stud J on the cam-tube arm P, as shown in Fig. 4900, and will traverse the cam-tube M back again towards the right-hand end of the machine, as in Figs. 4897 and 4900, and the cams for the web-making movements will come into operation so long as the narrowing handle is not raised again, the stud J will continue to pass below the upper helical incline K and alongside of the lower one L, as in Fig. 4900, and the cam-tube will not be traversed; but whenever the narrowing handle is lifted the web-making movements will be stopped, and a narrowing will be effected. There are altogether twelve cams upon the cam-tube M for producing the various movements required in knitting and in narrowing, and of the three cams shown in Figs. 4896 to 4901, the cam B acting on the lever A produces the elevation and depression of the coverers in narrowing, by tilting the coverer slide-bar F, Figs. 4864 and 4885, upon the centres on which it is carried in the rocking frame, while the pair of cams S S acting alternately upon the lever T, Figs. 4896 to 4901, produce the vertical movements of the presser-bar B and the sinker lowering-bar Y, Figs. 4864 and 4885.

In conclusion, with reference to the speed of working of the self-acting knitting machine, as compared with the older methods of knitting, it may be taken that a skilled knitter with ordinary knitting pins will knit about sixty stitches or loops a minute in knitting the leg of a stocking. A skilled framework knitter will with his hand-frame knit on the same work about 5400 stitches a minute, whereas a girl will on the same work attend to three of the self-acting machines, each making fifty courses a minute of 13½ in. width and 20 stitches an inch, the three machines together thus making 40,500 stitches a minute. A large number of these self-acting machines are now in use, having been in successful operation for several years.

KYANIZING.

A method of preserving wood from dry-rot, introduced by Kyan. The operation consists in soaking the wood in a solution of corrosive sublimate, which forms a new chemical compound with the albumen, and prevents the destructive power going on. At first the proportions used were 1 lb. of corrosive sublimate to 4 gallons of water, but on subsequent trials it was found that the wood absorbed about 6 or 7 lbs. of the salt a load, which would have rendered the process too costly for general use. Ultimately the proportions were reduced to 1 lb. of corrosive sublimate to 10 gallons of water when a maximum strength was required, and 1 lb. to 15 gallons of water when a minimum; with the latter proportion 1½ lb. was sufficient for a load of timber containing 50 cub. ft. The solution is contained in a wooden tank, put together so that no metal of any kind can come in contact with it. The salt dissolves best in tepid water. The time required to saturate the timber depends on its thickness. Twenty-four hours are usually allowed for each inch in thickness of boards and small timber. Large timber requires from a fortnight to three weeks.

Notwithstanding that corrosive sublimate is highly destructive to all forms of animal life, Kyan's process has not been found effective either against the worm or white ant, though it appears to have had some effect in retarding the dry-rot. It is now seldom used, and other methods have replaced this once over-praised remedy.

Another process formerly in great favour was that by Sir William Burnett. It had for its object, in common with kyanizing, the coagulation of the albumen of the wood. Burnett used, in a wooden tank, a solution of *chloride of zinc*, in the proportion of 1 lb. to 4 gallons of water.

Timber requires to be immersed for about two days for each inch in thickness, and afterwards taken out and left to dry from fourteen to ninety days.

The process is applicable to canvas, ropes, and similar articles, which require to be immersed in the solution for about forty-eight hours, and then taken out and dried. The process on wood may be more expeditiously performed by means of the hydraulic press, with which the solution of chloride of zinc is forced into the timber. Where the timber can be kept tolerably dry, it is no doubt beneficial, as it tends to harden the wood, and renders it partially incombustible, and it is also supposed to prevent the attacks of insects, which are found to commit great ravages in the interior fittings of vessels.

One of the most successful means yet tried of preserving timber, whether from the effects of exposure to the weather, dry-rot, or the attacks of worms and insects, is by impregnating its substance with *creosote*, one of the products obtained from the distillation of coal-tar, and possessing powerful antiseptic properties. When injected into the wood, creosote has the effect of coagulating the albumen, thereby preventing decomposition, and the bituminous oil with which it is combined enters the capillary tubes of the wood, closing up its pores so as to exclude both air and moisture, and the noxious properties of the oil have the effect of repelling both worms and insects.

Several attempts have been made from time to time to introduce creosote into notice as a preservative of wood; but it was not until 1838 that it became extensively used. The opinions of engineers, who have used it for the preservation of railway sleepers in all climates, both at home and abroad, have been strongly in its favour, and its power of enabling timber to resist putrefaction, and to a considerable extent of repelling the attacks of the sea-worm and white ant, when properly applied and in sufficient quantity, has been placed beyond doubt.

It was found, however, by Stevenson to have failed in repelling the attacks of the *Limnoria terebrans* at Invergorden in Scotland, where the piles of a jetty, erected in 1858, and which had been thoroughly creosoted, "were very much eaten and perforated" in about four years after being fixed; and Stevenson, in a paper "On the Ravages of the *Limnoria terebrans*," read before the Royal Society in 1862, gave it as his opinion that the process of creosoting preserved timber from the attacks of marine insects only so long as the oil existed as a film, or coating, on the outside of the timber. When the attrition caused by the motion of the sea removed this film or coating, and exposed the fibrous surface of the timber, the insects would then attack and perforate it whether it was creosoted or not, its search being for a fibrous substance in which to burrow.

The mode of impregnating wood with creosote adopted by Bethell is to dry out the moisture from the pores of the timber by passing all the smoke and products of combustion from the burning fuel through the drying house so as to pass between the different pieces of wood, thus drying and smoking them at the same time, after the manner that hams, bacon, and fish are smoked and cured. By this mode of drying, wood that has been cut down for several months loses in ten hours about 8 lbs. in weight a cubic foot; and if immersed in hot creosote oil in open tanks directly after it leaves the drying house, and while warm, it quickly absorbs the oil to the extent of 8 or 9 lbs. a cubic foot. Another method is to place the timber, after it leaves the drying house, in a wrought-iron cylinder with closed ends, and to force in the heated oil at a pressure of about 170 lbs. to the square inch. The heat is kept up in order to prevent the creosote from crystallizing in the pores of the wood during the process. Under this system, pine, fir, or other soft wood easily absorbs from 10 to 12 lbs. of oil a cubic foot. For railway works, Bethell considered 7 lbs. a cubic foot sufficient, but for marine works he recommended that 10 lbs. of the oil a cubic foot, at least,

should be forced into the wood, and some engineers have required even 12 lbs. Into oak and other hard woods, particularly those of India, it is sometimes difficult to force more than 2 or 3 lbs. of the oil, even by the heaviest pressure. The Saul-wood of India was seldom penetrated more than $\frac{1}{8}$ of an inch from the surface.

Another method which is applicable to the preservation of straight-grained or porous timber, was introduced some years ago by M. Boucherie, a French chemist. Instead of using great pressure to impregnate the timber, as in creosoting, he applied a moderate pressure only to one end of the log or tree, which had the effect of expelling the sap, and permitted the pores of the timber to be filled with the preserving fluid, which consisted of a solution composed of 1 part of *sulphate of copper* to 100 parts of water by weight; the specific gravity of the solution at 60° Fahr., when of proper strength, being 1·006, or nearly so. The process is as follows;—A water-tight cap is placed on one end of the log to be saturated, and the solution is introduced within it by a flexible tube. The pressure required not being more than from 15 to 20 lbs. on the square inch, it may be obtained in a very simple way by raising the tank which contains the solution to the height of 30 or 40 ft. from the ground. When the pressure is applied, the sap runs in a stream from the opposite end of the log; and a ready means exists of discovering when it is exhausted and the whole length of the timber penetrated by the solution, by simply rubbing the end with a piece of prussiate of potash, which will leave a deep brown mark when brought into contact with the sulphate of copper.

There are certain kinds of timber which are impenetrable by the solution applied in the manner described. It answers best with newly-felled beech, birch, larch, Scotch pine, alder, elm, or poplar. Trees felled any time between November and May can be prepared in the latter month, but when cut down in May, or any month between that and November, they should be prepared within three weeks of the time of felling.

It was found, during the preparation of large quantities of timber for the French navy and railways, that the time necessary for the operation depends both on the length of the tree and on the description of timber. Trees of 40 ft. in length, prepared at Fontainebleau for the French navy, required from eight to ten days to become sufficiently impregnated; whereas, for a length of 9 ft. only, the process was accomplished in twenty-four hours. One great advantage attending Boucherie's method is the small cost of the apparatus required.

Boucherie also used the impure pyrolignite of iron, which was found not only to preserve the wood from decay, but to harden it to a very high degree.

To Cure the Dry-Rot.—When once this disease has set in, the cure is very difficult, as the whole place where the timber is situated becomes infected. Measures should be immediately taken to provide proper ventilation, and to cut off the access of moisture; the diseased parts of the timber should be cut away, and every particle of fungus removed by brushing the walls and adjoining timbers; after which a wash should be applied to all infected places, consisting of some solution that will destroy any germs of fungi that may have escaped the brush.

Davy proposed corrosive sublimate, which should not be of less strength than 1 oz. to every gallon of water, laid on hot.

A solution of sulphate of copper, in the proportion of about 8 oz. to a gallon of water, is said to make an excellent wash, and is cheaper than the corrosive sublimate.

A mixture of sulphate of copper and sulphuric acid in the proportion of 1 lb. of each to 6 gallons of water has been found to preserve timber for nearly twice the ordinary period. The sulphate of copper should first be dissolved in 1 gallon of boiling water, and the remainder of the water and sulphuric acid added afterwards.

Sulphate of iron has been used as a wash for timber, but it is not so efficacious as sulphate of copper.

Oil of tar also makes an excellent wash for timber that is infected with the dry-rot, but the smell is very much against its use in situations that are inhabited.

When a mere antiseptic is required, probably one of the best that can be used is carbolic acid in its crude state. The surface of the timber and the place on which it rests should be washed over with it; but, like oil of tar, the smell is objectionable in some situations.

To prevent the attacks of the sea-worm, the most effectual remedy is to thoroughly impregnate the wood with creosote. Nails closely driven over the surface of piles below high water, when carefully performed, have been found to protect them from the attack of these animals. This and covering the surface with sheet copper, are perhaps the only methods known of resisting the attack of the *Limnoria terebrans*.

The only timber that will resist the white ant is teak (*Tectona grandis*) and ironwood (*Sideroxylon*). The Jarrah wood of Australia sometimes escapes their ravages, but all other woods are attacked by them. The only effectual remedy has been creosote; but even that, if it has not penetrated the wood thoroughly, will not avail.

Corrosive sublimate, chloride of zinc, salts of lead, even creosote and carbolic acid, have all been tried at St. Helena with no more effect than to retard the destruction of the wood for a few months.

For the true ant, or *Formica*, arsenic has been used in the West Indies; and Thunberg has found cajeput oil effectual in destroying the red ants of Batavia: he used it to preserve his boxes of specimens from them. When ants were placed in a box anointed with this oil, they died in a few minutes.

Books on Preserving Timber:—Bowden (W.), 'On Dry-Rot,' 8vo, 1810. Mathew (P.), 'On Naval Timber,' 8vo, 1812. Chapman (W.), 'A Treatise on the Preservation of Timber,' 8vo, 1817. Lingard, 'On Timber,' 8vo, 1827. George (J.), 'The Cause of Dry-Rot Discovered,' 8vo, 1829. Birkbeck (Dr.), 'On the Preservation of Timber by Kyan's Process,' 8vo, 1834. Dickson (Dr.), 'A Lecture on Dry-Rot,' 8vo, 1838. Faraday (M.), 'On the Practical Prevention of Dry-Rot in Timber, 8vo, 1838. Tredgold's 'Carpentry,' by J. T. Hurst, cr. 8vo, 1871.

LAMP, SAFETY. Fr., *Lampe de sûreté*; Ger., *Sicherheitslampe*; Ital., *Lampada di sicurtà*.

In mines subject to the accumulation of firedamp it has always been desirable to have methods of lighting incapable of communicating combustion to the surrounding atmosphere. The primitive method of effecting this consisted in the use of the steel mill, a circular piece of steel fixed to the axis of one of a pair of multiplying wheels, arranged in a frame so as to be rotated quickly against the sharp edge of a flint, and so produce, by a succession of sparks, a feeble light. This uncertain, expensive, and, under certain circumstances, dangerous plan, was eventually superseded by the lamp invented by Sir Humphry Davy. The Davy lamp owes its comparative safety to its having the flame surrounded with a cylinder of wire gauze. When it is immersed in an explosive atmosphere the inflammable gas enters from without, and burns in the gauze cage, but, in consequence of the cooling power of the wire gauze, no flame can pass outward to ignite the surrounding atmosphere. The miner is therefore warned of his danger by the appearance of the lamp.

The Davy lamp is not entirely safe, and the unsafety of this and other lamps so much trusted and so largely used in our coal mines, has been indisputably proved by the accidents which have occurred, and the careful and systematic experiments made on the lamps. The cause of this failure, particularly with the Davy, Clanny, and Stephenson lamps, briefly stated, is that, although while in a still atmosphere of explosive gas they only burn or heat so much air or gas as the natural ventilation caused by their flame and the flame of the burning gas brings to them, yet when immersed in a current moving in a determinate direction they are compelled to burn a quantity of gas represented by the area of the cross-section of the open parts, and by the velocity of the current passing: for instance, a Davy lamp will consume about 13 cub. ft. of pure air an hour; suppose this consumption to be quadrupled when the lamp is placed in a quiet atmosphere of explosive gas, equal to a consumption of 50 cub. ft. an hour, but placed in a current of 10 ft. a second, what will its consumption be? The sectional area of a Davy lamp cylinder will be $7\frac{1}{2}$ sq. in., $\therefore$ consumption $= \frac{7\frac{1}{2} \times 60 \times 60 \times 120}{1728} = 1860$ cub. ft. an hour, about thirty-seven times what it was in the other case. Now the consumption of thirty-seven times as much gas means the evolution of thirty-seven times as much heat, and this in the same time, therefore the gauze and surrounding air have to radiate and conduct away thirty-seven times as much heat a second, minute, or hour. But the radiating and conducting powers of iron and air are not infinite, hence a point arrives at which the task is too great, and the gauze and in due course the surrounding gas are so highly heated as to explode. The danger is the greater when it is further considered that there is an action somewhat similar to that of the fan blast on a smith's fire, and that the current clears away the products of combustion, so that they do not impede the consumption of the next following gas; thus a much more intense heat is produced.

Hann's safety lamps are constructed on the plan of protecting the flame of the lamp, and the whole space included within the wire gauze, from the currents of air or gas passing outside it. Thus, instead of allowing air to pass freely through all parts of the gauze, as in the Davy lamp, or to pass only through a gauze above a short glass cylinder, as in the Clanny, or to pass to some extent under and freely over the ends of a glass cylinder within a gauze cylinder, as in the Stephenson, no air is allowed to enter except through apertures properly placed, and air is only allowed to escape from the upper end, and not from any part of the sides of the gauze, both the inlet and outlet being adequately protected from any *direct* current of air or gas.

Hann's improvements are applied both to the original Stephenson and the Clanny lamps. The construction of the former lamp differs from a Davy only in the following particulars; within the gauze is a tall glass chimney surmounted by a copper perforated cap, the air enters the lamp through some apertures below the glass, and through whatever open space may exist between the notched ring supporting the glass and the outside frame, and escapes not only from the end of the gauze cylinder, but from the sides of the perforated cap.

In Hann's lamps the inlet and outlet are prescribed and shielded in the following manner;— First, in the improved Stephenson, or No. 1 lamp, of which Figs. 4904, 4905, are elevations, Fig. 4906 a section, the inlet is through the apertures at *b*, the air is obliged to pass through the lower part of the gauze cylinder, Fig. 4907, and then through the slits in the screw ring *c*, shown enlarged at Fig. 4910. Upon the flat part of the upper edge of this screw ring stands the glass cylinder *d*, which reaches nearly to the top of the gauze cylinder; it is surmounted by a brass tube *e*, fitting to it accurately, but not tightly, by a swedged end; this metallic tube goes right up under the top plates, and carries the whole escaping air up the end of the gauze cylinder through which alone it can escape. This outlet is protected by an arrangement of a pair of parallel plates, by means of which a current, whatever be its direction, cannot strike this point of outlet direct, it can only do so by a reflex or diverted current, yet the products of the combustion have ample space for their escape. The other points deserving notice are that the upper edge of the screw ring *c* carries a projecting rim, which better secures the glass cylinder. If, from any circumstances advantageous, the common device of a cone can be put in the metallic tube, which may sometimes improve the current in the lamp. Fig. 4906 shows the inlet-holes turned upwards into a cavity within the boss *a*, by which means the current affects the lamp still more indirectly. Fig. 4908 is a horizontal section through this boss *a*, and shows the vertical air-holes; the niche *a* is made for the seam of the gauze *a'*, Fig. 4907, to fit into. Fig. 4911 is the lamp-glass, shown also at *d*, Fig. 4906.

Figs. 4902, 4903, illustrate the No. 2, or improved Clanny lamp, in which the air enters through apertures in every respect the same as those in the No. 1, it then passes through a screw ring, which is very similar to Fig. 4910, and which carries a strip of wire gauze, covering all the openings through it. This screw ring supports a strong glass cylinder, of about $2\frac{1}{2}$ to $2\frac{3}{4}$ in. in length, the upper end of which is enclosed in a framework similar to that of the ordinary Clanny. A brass tube, as in the No. 1, surmounts the glass. The brass tube carries at its lower end a flat, wide flange, which rests on the glass, and thus, when the lamp is put together, it is impossible for the tube to move

4902.

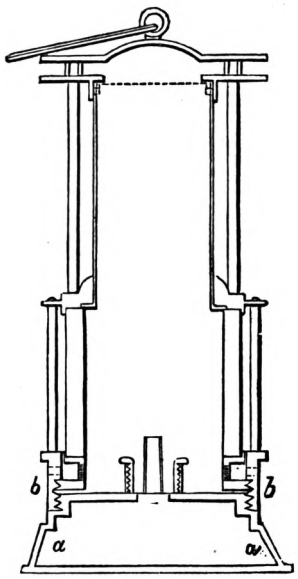

4903.

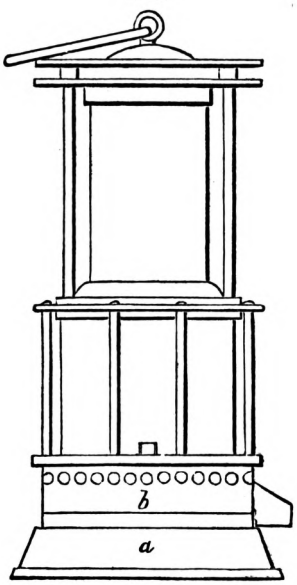

4904.

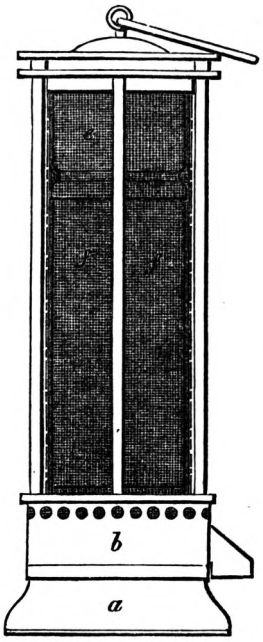

4905.

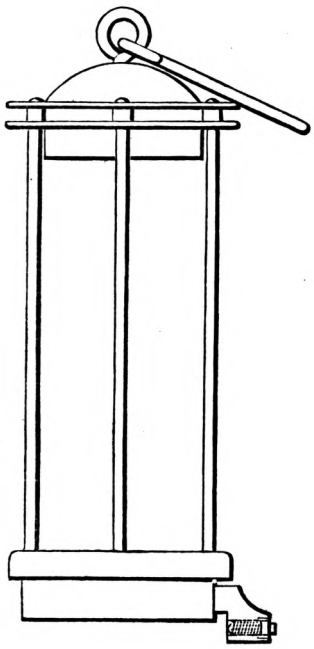

4906.

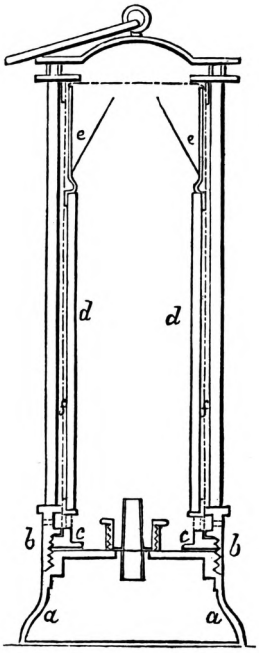

4907.

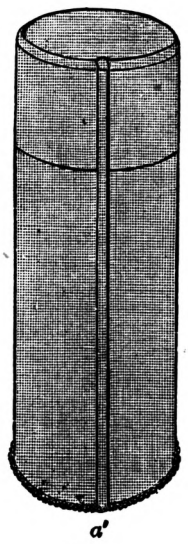

4908.

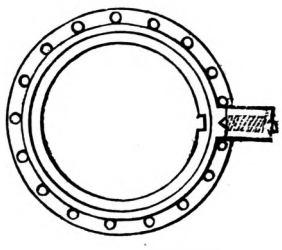

4909.

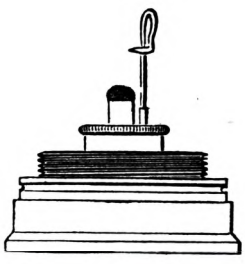

4910.

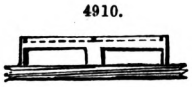

4911.

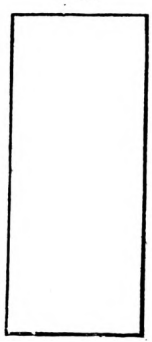

while the glass remains intact. The upper end of this brass tube is closed by a plate of perforated copper brazed to the tube. The outlet is protected in the same manner as in the No. 1.

In both lamps it is advantageous to keep the top of the gauze and brass cylinders a little below the position shown in the figures; they are thus removed still farther from the currents of air.

The No. 1 lamp consists of six principal parts;—oil vessel, Fig. 4909, upper main frame, Fig. 4905, screw ring, glass cylinder, gauze cylinder, brass tube. No. 2 of five principal parts;—oil vessel, main frame, screw ring, glass cylinder, Fig. 4911, brass cylinder. The Davy lamp of five principal parts;—oil vessel, main frame, small ring, gauze cylinder, gauze cap. The Clanny lamp of eight principal parts;—oil vessel, main frame, lower screw ring, glass cylinder, upper screw ring, small ring, gauze cylinder, gauze cap. The Stephenson lamp has seven principal parts;—oil vessel, main frame, screw ring, gauze, glass, two copper cap-pieces. Thus Hann's lamps are rather simpler than more complex as compared with those now generally used, and yet a strong lamp is produced.

The results of these arrangements are that great safety is procured, for these lamps have successfully withstood the extreme velocity of 50 ft. a second, a velocity unknown in mines; an improved light is afforded compared with the same class of lamp; and yet the lamps are neither heavy, large, expensive, nor complicated, all very important points. They are among the few new lamps that have received the practical approval of any considerable number of mining engineers.

The relative amount of light given out by the undermentioned safety lamps was carefully determined by John Pattinson, of Newcastle-on-Tyne, and he found the following results. In each of the lamps the same kind of oil, and the same kind of wicks were used, and each lamp was trimmed so as to give the greatest amount of light without smoking. All the lamps were made by one and the same manufacturer, and the light measured by a photometer. Assuming the amount of light given by the ordinary Davy lamp to be represented by 1000, the following numbers represent the relative amount of light given out by the other lamps experimented with;—

Ordinary Davy	1000
Ordinary Stephenson	1063
Hann's Improved Stephenson	1242
Ordinary Clanny	2345
Hann's Improved Clanny	3399

Thus whilst the ordinary Stephenson lamp gives but a little more light than the Davy Hann's Improved Stephenson gives about one-quarter more light; and whilst the ordinary Clanny gives about 2½rd times more light than the Davy, Hann's Improved Clanny gives over 3½rd times more light.

LATHE. Fr., *Tour*; Ger., *Drehbank*; Ital., *Tornio*; Span., *Torno*.

See Hand-Tools. Machine Tools.

LATTICE GIRDER. Fr., *Poutre en treillis*; Ger., *Gitterträger*; Ital., *Trave all' americano*; Span., *Viga de celosia*.

See Bridge.

LAP. Fr., *Recouvrement du tiroir*; Ger., *Deckung*; Span., *Tapadura*.

See Steam-Engine. Slide-Valve.

LAUNDER. Fr., *Mahay* (en Belg.) *boisage de la sole d'une galerie d'encoulement*; Ger., *Gefluder*; Span., *Artesa* (*Mineria*).

The name given by miners to the trough which receives the powdered ore from the box where it is beaten.

LEAD. Fr., *Plomb*; Ger., *Blei*; Ital., *Piombo*; Span., *Plomo*.

Atomic weight, 207. Molecular weight unknown.

Lead is obtained chiefly from its native sulphuret, known by the name of galena. There are various processes for extracting the metal. One is to partially roast the ore, when a portion of the sulphur becomes sulphate of lead.

$$\underset{\text{Sulphuret of lead.}}{\mathrm{PbS}} + 2\left(\underset{\text{Oxygen.}}{\mathrm{O}_2}\right) = \underset{\text{Sulphate of lead.}}{\mathrm{SPbO_4}}$$

A second portion produces oxide of lead and sulphureous anhydride.

$$\underset{\text{Sulphuret of lead.}}{2\,\mathrm{PbS}} + 3\left(\underset{\text{Oxygen.}}{\mathrm{O}_2}\right) = \underset{\text{Sulphureous anhydride.}}{2\,\mathrm{SO_2}} + \underset{\text{Oxide of lead.}}{2\,\mathrm{PbO}}$$

A third portion remains unaltered as sulphuret of lead.

When it is judged that oxidation is sufficiently advanced for the mass to contain the required proportions of oxide, sulphate and sulphuret, the ingress of the air is stopped, and the heat greatly increased. The sulphate and oxide of lead react upon the sulphuret; sulphureous anhydride is liberated, and metallic lead remains at the bottom of the furnace.

$$\underset{\text{Sulphuret of lead.}}{\mathrm{PbS}} + \underset{\text{Sulphate of lead.}}{\mathrm{SPbO_4}} = \underset{\text{Sulphureous anhydride.}}{2\,\mathrm{SO_2}} + \underset{\text{Lead.}}{2\,\mathrm{Pb}}$$

$$\underset{\text{Sulphuret of lead.}}{\mathrm{PbS}} + \underset{\text{Oxide of lead.}}{2\,\mathrm{PbO}} = \underset{\text{Sulphureous anhydride.}}{\mathrm{SO_2}} + \underset{\text{Lead.}}{3\,\mathrm{Pb}}$$

This is called the reaction process.

The lead may also be extracted by transforming all the sulphuret into oxide by roasting, and afterwards reducing the oxide by means of carbon, or by heating the galena directly with iron, which combines with the sulphur and liberates the lead.

Lead is of a bluish grey colour. When fresh cut it presents a bright metallic appearance, but it is quickly blackened by exposure to the air, owing to the formation of a thin film of oxide. It is soft, and leaves a streak upon paper. The density or specific gravity of pure lead is 11·44, and instead of increasing under cold-beating, as the other metals do, it decreases. Lead crystallizes in regular octahedrons, or in four-sided pyramids. These crystals may be obtained artificially. It fuses readily at about 625°; before the gas blow-pipe it may be volatilized. This metal occupies the sixth rank for malleability, and the eighth for ductility. Its tenacity is very low.

Lead in a state of fusion possesses the property of dissolving a small quantity of oxide, which tenders it brittle; but its original qualities may be restored by stirring it with a piece of charcoal. It preserves itself for an indefinite time when exposed to the air; for though a thin film of oxide forms on its surface when exposed, this film preserves the remaining metal from further oxidation. When heated, however, it readily becomes oxidized. When lead is placed in pure water exposed to the air, it absorbs the oxygen and the carbonic anhydride, and gives a hydrated carbonate of lead. The soluble salts, and especially sulphate of lime, prevent this reaction from taking place. This explains why the pipes of fountains do not become oxidized.

Hydrochloric and dilute sulphuric acid do not sensibly act upon lead. Concentrated sulphuric acid acts upon it by liberating sulphureous anhydride and producing sulphate of lead. The best solvent of this metal is nitric acid. Lead readily combines with mercury, and forms an amalgam which is liquid or solid according as the mercury or the lead predominates.

Lead is tetratomic. It combines with four molecules of two monatomic organic radicals, ethyl and methyl. The following are known;—

Ethyl lead .. .. $Pb(C_2H_5)^4$ | Methyl lead .. .. $Pb(CH_3)^4$

The formula of these compounds is not uncertain; for we may substitute chlorine or iodine for a quarter of the ethyl or methyl, and this would be impossible if they contained less than four molecules of these radicals.

With the simple monatomic substances, lead always acts as a bivalent, which amounts to saying that it is never saturated. There exist

A chloride of lead	$PbCl_2$	An iodide of lead	PbI_2
A bromide „	$PbBr_2$	A fluoride „	$PbFl_2$

Lead combines also with the diatomic metalloids; with sulphur it forms a single compound; sulphuret of lead, PbS. With oxygen it combines in various proportions, hence four distinct oxides;—

A suboxide	Pb_2O	Red-lead	Pb_3O_4
A protoxide	PbO	A binoxide (plumbic anhydride)	PbO_2

Along with the protoxide must be placed a condensed hydrate, $Pb\{\begin{matrix}OH\\O\\OH\end{matrix}$ to which the salts correspond. The simple hydrate $Pb\{\begin{matrix}OH\\OH\end{matrix}$ has hitherto not been obtained, but a large number of salts are known resulting from the substitution of acid radicals for the typical hydrogen of this base.

Haloid Compounds of Lead.—Chloride of Lead, $Pb\{\begin{matrix}Cl\\Cl\end{matrix}$.—Chloride of lead may be prepared by heating oxide of lead with hydrochloric acid. By this means a white powder is obtained, which, when dissolved in boiling water, crystallizes, on the cooling of the liquor, in pretty acicular crystals of a silvery lustre. This salt may also be prepared by pouring hydrochloric acid or a soluble chloride into the cold solution of a salt of lead.

1. $PbO + 2\left(\begin{matrix}H\\Cl\end{matrix}\right) = PbCl_2 + \begin{matrix}H\\H\end{matrix}\}O$

Oxide of lead. — Hydrochloric acid. — Chloride of lead. — Water.

2. $Pb\{\begin{matrix}ONO_2\\ONO_2\end{matrix} + 2\left(\begin{matrix}Na\\Cl\end{matrix}\right) = 2\left(\begin{matrix}NO_2\\Na\end{matrix}\}O\right) + Pb\{\begin{matrix}Cl\\Cl\end{matrix}$

Neutral nitrate of lead. — Chloride of sodium. — Sodic nitrate. — Chloride of lead.

Chloride of lead is hardly soluble in cold water; it is more soluble in boiling water. Alcohol does not dissolve it at all. When heated, chloride of lead fuses before attaining red heat, and when heated further, it gives off fumes freely. When fused and cooled, it becomes a translucid mass, capable of being cut with a knife. For industrial purposes, as pigments, compounds of chloride and oxide of lead and oxychloride of lead are prepared, the true atomic composition of which is not known. All of these productions are of a yellow colour.

Bromide of Lead, $PbBr_2$.—This is obtained by a double decomposition, by means of a soluble salt of lead and a soluble bromide; it is insoluble in alcohol, hardly soluble in cold water, but more soluble in boiling water. Like the chloride it is obtained crystallized in pretty spangles by saturating it with boiling water and then leaving the water to cool.

Iodide of Lead, PbI_2.—This is prepared in the same way as the bromide and chloride, by

substituting an iodide in the reaction for the chloride and bromide. Iodide of lead is yellow; it is insoluble in alcohol, hardly soluble in cold water, but much more soluble in boiling water. On leaving its hot solution to cool, it crystallizes in spangles of a rich gold colour. When fused while exposed to the air, it becomes an oxyiodide by losing iodine. When heated while protected from the air, it becomes a reddish yellow, then a brick red, afterwards a brown red, and fuses finally into a liquid of the same colour, which sets, on cooling, in a mass of a clear yellow colour. Iodide of lead combines with hydrochloric acid, the iodides of potassium, ammonium, &c., forming double salts; with ammonia it forms an iodide, the symbol of which is $[Pb\,H_6\,N_2]\,I_2$.

Combinations of Lead with the Diatomic Metalloids.—Sulphuret of Lead, $Pb\,S$.—Sulphuret of lead is found in a natural state. It forms the most abundant lead ore, and is known in commerce as galena. It may be obtained artificially by acting upon the solution of a soluble salt of lead with hydrosulphuric acid.

$$Pb\begin{Bmatrix}O\,N\,O_2\\O\,N\,O_2\end{Bmatrix} + \begin{matrix}H\\H\end{matrix}\Big\}S = 2\left(\begin{matrix}N\,O_2\\H\end{matrix}\Big\}O\right) + Pb\,S$$

Neutral nitrate of lead. — Hydrosulphuric acid. — Nitric acid. — Sulphuret of lead.

Sulphuret of lead, prepared by a double decomposition, constitutes a black and amorphous powder. Galena, on the contrary, crystallizes in the cubic form. Its crystals are of a bluish grey colour, and possess a metallic lustre. Its specific gravity is from 7·25 to 7·7; at a red heat it fuses, and may even become slightly volatilized.

We have already seen that when galena is roasted, there are formed sulphureous anhydride, oxide, and sulphate of lead; and also that when heated while unexposed to the air with the oxide or the sulphate, galena gives sulphureous anhydride and metallic lead. Hydrochloric acid has no effect upon galena, nor has dilute sulphuric acid; but this latter acid when concentrated gives up oxygen to the galena, which passes into the state of sulphate, and reduces itself to water and sulphureous anhydride. Dilute nitric acid transforms galena into nitrate of lead with a deposit of sulphur; this sulphur comes from the hydrosulphuric acid which is formed at first, and which the nitric acid afterwards decomposes.

$$Pb\,S + 2\left(\begin{matrix}N\,O_2\\H\end{matrix}\Big\}O\right) = Pb\begin{Bmatrix}O\,N\,O_2\\O\,N\,O_2\end{Bmatrix} + \begin{matrix}H\\H\end{matrix}\Big\}S$$

Sulphuret of lead. — Nitric acid. — Nitrate of lead. — Hydrosulphuric acid.

If the nitric acid is concentrated, a portion of the sulphur deposited becomes oxidized at its expense, sulphuric acid is produced, and this acid precipitates an equivalent quantity of lead as an insoluble sulphate. Thus the same products are obtained as with the dilute acid, and the sulphate of lead in addition. If the acid is at its greatest concentration, the whole of the sulphur passes into the state of sulphuric acid, and consequently only sulphate of lead is obtained.

Galena is often argentiferous; the richest specimens are those which crystallize in little crystals. Along with the sulphuret of lead, $Pb\,S$, there appears to exist a hemi-sulphuret of this metal, $Pb_2\,S$, and a tetarto-sulphuret, $Pb_4\,S$. The hemi-sulphuret is formed during the metallurgical treatment of galena. It may also be prepared by fusing two atoms of lead with one of sulphur. The tetarto-sulphuret is obtained by calcining 100 parts of galena with 84 of lead.

Protoxide of Lead, $Pb\,O$.—When lead is heated while exposed to the air, a yellow powder is formed, known by the name of *massicot*, which is nothing but protoxide of lead. Massicot is formed also when carbonate or nitrate of lead is subjected to a certain degree of calcination. Massicot when cooling from a state of fusion, crystallizes, and is then known as *litharge*.

Oxide of lead assumes various shades of colour. If, for example, litharge be heated, it changes from a reddish to a light yellow, and goes back to its original colour as it cools. Litharge decomposes the alkaline salts, liberating caustic alkali; but to do this the plumbic oxide must be in excess. When boiled with a very concentrated solution of potassa litharge dissolves, but is again deposited in very heavy little crystals by the cooling of the liquor.

The protoxide of lead when fused and raised to a red heat absorbs oxygen, but gives it up again as it cools, like metallic silver. When heated in an earthen crucible, it combines with the silicate of the crucible, forming a fusible silicate, and the crucible is quickly burned through. Protoxide of lead produces the double decomposition with the acids, and gives very stable salts of lead. It is therefore a basic anhydride. We have already observed that it may be dissolved in the alkaline liquors, and that it may sometimes act as an acid anhydride. Its basic properties, however, are far more important than its acid properties. When protoxide of lead is heated for a long time while exposed to the air, red-lead is formed.

Plumbic Hydrate, $Pb\begin{Bmatrix}O\,H\\O\,H\end{Bmatrix}$.—This hydrate is not known, but there exist a great number of salts corresponding to it, the most important of which are, the sulphate, the nitrate, the chromate, the acetate, and the carbonate.

Sulphate of Lead, $\begin{matrix}S\,O_2\\Pb\end{matrix}\Big\}O_2$.—For printing purposes, acetate of aluminium is prepared by precipitating the sulphate of alumina by the acetate of lead; sulphate of lead is formed in this reaction as an accessory product.

$$\begin{matrix}(S\,O_2)^3\\Al_2\end{matrix}\Big\}O_6 + 3\left(Pb\begin{Bmatrix}O\,C_2\,H_3\,O\\O\,C_2\,H_3\,O\end{Bmatrix}\right) = \begin{matrix}Al_2\\(C_2\,H_3\,O)^6\end{matrix}\Big\}O_6 + 3\left(\begin{matrix}S\,O_2\\Pb\end{matrix}\Big\}O_2\right)$$

Aluminic sulphate. — Acetate of lead. — Acetate of alumina. — Sulphate of lead.

The sulphate of lead is a white powder, insoluble in water, and partially soluble in the acid liquors. The ammoniacal salts dissolve it by causing with it the double decomposition, that is,

by decomposing it. Of all these salts, tartrate of ammonium dissolves sulphate of lead best. The sulphate of lead is not decomposable by heat alone, a quality that clearly distinguishes it from the sulphates of all the other common metals. Iron, zinc, and carbon reduce it. With carbon, according to the proportions in which the two substances are mixed, and the rapidity with which they are heated, the sulphate of lead is converted into sulphuret or subsulphuret of lead, or even into metallic lead; in the two latter cases, sulphureous anhydride is evolved. When boiled with a solution of carbonate of soda, the sulphate is converted into carbonate of lead, whilst the sodium passes into the state of a sulphate If a wetted compound of one molecule of sulphate of lead and hal a molecule of lime be left, hydrate of lead will be formed, which may be converted into acetate by dissolving it in acetic acid. These are so many means of utilizing sulphate of lead, which is considered in workshops as of no value.

Nitrate of Lead, $Pb\{^{O\,N\,O_2}_{O\,N\,O_2}$.—This nitrate is prepared by dissolving oxide of lead, or metallic lead in boiling nitric acid. As this salt is not very soluble in the acids, it is precipitated as it is formed. It is dissolved in water and then crystallized. Nitrate of lead dissolves much better in hot than in cold water. Alcohol does not dissolve it. Heat decomposes it into oxygen, hyponitride, and oxide of lead. When boiled with oxide of lead, it is converted into a basic salt corresponding to the formula $Pb\{^{O\,N\,O_2}_{O\,H}$.

$$Pb\{^{O\,N\,O_2}_{O\,N\,O_2} + PbO + \}^{H}_{H}O = 2\left(Pb\{^{O\,N\,O_2}_{O\,H}\right)$$

Neutral nitrate of lead. — Oxide of lead. — Water. — Basic nitrate of lead.

When heated with metallic lead and water, it is converted into nitrite with a great excess of metal. If this nitrite is subjected to the action of a current of carbonic anhydride, it gives carbonate and neutral nitrite of lead.

1. $$Pb\{^{O\,N\,O_2}_{O\,N\,O_2} + 2\,Pb = \left.\begin{matrix}Pb\{^{O\,N\,O}\\ Pb\{^{O}\\ Pb\{^{O\,N\,O}\end{matrix}\right\}$$

Neutral nitrate of lead. — Lead. — Triplumbic nitrite.

2. $$\left.\begin{matrix}Pb\{^{O\,N\,O}\\ Pb\{^{O}\\ Pb\{^{O\,N\,O}\end{matrix}\right\} + 2\,CO_2 = 2\left(\{^{CO}_{Pb}\}O_2\right) + Pb\{^{O\,N\,O}_{O\,N\,O}$$

Triplumbic nitrite. — Carbonic anhydride. — Carbonate of lead. — Neutral nitrite of lead.

Chromate of Lead, $\{^{CrO_2}_{Pb}\}O_2$.—Chromate of lead is prepared by double decomposition by means of acetate of lead and potassic chromate or dichromate.

$$\{^{CrO_2}_{K_2}\}O_2 + Pb\{^{O\,C_2H_3O}_{O\,C_2H_3O} = \{^{CrO_2}_{Pb}\}O_2 + 2\left(\{^{C_2H_3O}_{K}\}O\right)$$

Chromate of potassa. — Acetate of lead. — Chromate of lead. — Acetate of potassa.

Chromate of lead is also found native in the form of a red substance, crystallized in oblique rhomboidal prisms, the red-lead of mineralogists.

The artificial chromate is of a bright yellow colour; it is used as a pigment under the name of chrome yellow. When raised to a red heat it fuses, and sets, on cooling, in a reddish mass. If, instead of precipitating the neutral chromate of potassa by the neutral acetate of lead, liquors not neutral are precipitated, the precipitate has a variable colour. The colours may also be made to vary with the temperature at which the precipitation is effected. Generally the chromates of lead are charged with metal in proportion to their redness.

Neutral Acetate of Lead, $Pb\{^{O\,C_2H_3O}_{O\,C_2H_3O} + 3$ aq.—When lead is left to the simultaneous action of the air and the vapours of acetic acid, a basic acetate of lead is formed. Dissolved in an excess of acetic acid, this acetate gives a liquor which, when evaporated, leaves a deposit of beautiful crystals, the formula of which is $Pb\{^{O\,C_2H_3O}_{O\,C_2H_3O} + 3$ aq. The same salt may be obtained by dissolving litharge in acetic acid. The neutral acetate of lead is extremely soluble in water. Ammonia does not precipitate it, because this alkali gives with the plumbic salts, not hydrate, but sub-salts of lead, and the sub-salts of lead are soluble. Neutral acetate of lead in aqueous solution when hot readily dissolves litharge. There is formed, in this case, either a simple bibasic salt, or polyplumbic salts. All these salts, when subjected to the action of a current of carbonic anhydride, give a precipitate of carbonate of lead, whilst the neutral acetate of the same metal regenerates itself.

$$Pb\{^{O\,C_2H_3O}_{O\,C_2H_3O} + PbO + H_2O = 2\left(Pb\{^{O\,C_2H_3O}_{O\,H}\right)$$

Neutral acetate of lead. — Oxide of lead. — Water. — Bibasic acetate of lead.

$$2\left(Pb\{^{O\,C_2H_3O}_{O\,H}\right) + CO_2 = \{^{CO}_{Pb}\}O_2 + Pb\{^{O\,C_2H_3O}_{O\,C_2H_3O} + H_2O$$

Bibasic sub-acetate of lead. — Carbonic anhydride. — Carbonate of lead. — Neutral acetate of lead. — Water.

Neutral Carbonate of Lead, $\left.\begin{matrix}\text{C}\Theta\\ \text{Pb}\end{matrix}\right\}\Theta_2$.—Carbonate of lead is found native in crystals of the fourth order. In laboratories this substance is obtained in the form of a white pulverulent powder by precipitating a solution of carbonate of soda by a solution of acetate of lead.

Carbonate of lead (white-lead), being much used as a pigment, is prepared on a large scale. It is prepared for industrial purposes by two processes—one founded on an old method, known as the Dutch process; the other, modern, discovered by Thénard, and known as the Clichy process.

In the Dutch method, vessels filled with vinegar, in which strips of lead rolled into spirals are suspended, are placed in a dung-heap in course of fermentation at a temperature of 95° to 100°. These vessels are rudely closed with a piece of sheet lead. The strips of lead are thus subjected to the simultaneous action of the air, the vapours of acetic acid, and the carbonic anhydride which is produced in the fermentation of the dung. Under the influence of the air and the vinegar the lead becomes at first covered with basic acetate, which, in contact with the carbonic anhydride, regenerates neutral acetate, and gives carbonate of lead. From time to time the film of carbonate adherent to the strips of metal is removed, and this salt washed, to rid it of the acetate which it contains. It is afterwards dried and pulverized.

In the Clichy process, a sufficient quantity of litharge is dissolved in acetic acid to obtain the triplumbic acetate.

$$\left.\begin{matrix}\text{Pb}\{\Theta\,\text{C}_2\text{H}_3\Theta\\ \text{Pb}\{\Theta\\ \text{Pb}\{\Theta\,\text{C}_2\text{H}_3\Theta\end{matrix}\right\} + 3\,\text{aq.}$$

The solution of this salt is then subjected to the action of a current of carbonic anhydride, two molecules of oxide of lead separate in the state of carbonate, and the neutral acetate is regenerated.

$$\left.\begin{matrix}\text{Pb}\{\Theta\,\text{C}_2\text{H}_3\Theta\\ \text{Pb}\{\Theta\\ \text{Pb}\{\Theta\,\text{C}_2\text{H}_3\Theta\end{matrix}\right\} + 2\,\text{C}\Theta_2 = 2\left(\begin{matrix}\text{C}\Theta\\ \text{Pb}\end{matrix}\right\}\Theta_2\right) + \text{Pb}\{\Theta\,\text{C}_2\text{H}_3\Theta\,\text{C}_2\text{H}_3\Theta$$

Triplumbic acetate. | Carbonic anhydride. | Carbonate of lead. | Neutral acetate of lead.

The regenerated neutral acetate, when boiled with litharge, furnishes a fresh quantity of triplumbic acetate, which is again brought into the state of neutral carbonate, so that, with the exception of inevitable waste, the same quantity of acetic acid will serve for an indefinite time.

White-lead obtained by this process is inferior in quality to that prepared by the Dutch method, on account of its being composed of crystalline and transparent particles, but its quality may be rendered equal to that of the other kind by boiling it with a small quantity of carbonate of potassa.

Carbonate of lead is decomposed by the influence of heat into oxide of lead and carbonic anhydride.

$$\left.\begin{matrix}\text{C}\Theta\\ \text{Pb}\end{matrix}\right\}\Theta_2 = \text{C}\Theta_2 + \text{Pb}\Theta$$

Carbonate of lead. | Carbonic anhydride. | Oxide of lead.

It dissolves in the acids, and gives off carbonic anhydride; at the same time water and a salt of lead are produced.

$$\left.\begin{matrix}\text{C}\Theta\\ \text{Pb}\end{matrix}\right\}\Theta_2 + 2\left(\begin{matrix}\text{N}\Theta_2\\ \text{H}\end{matrix}\right\}\Theta\right) = \text{C}\Theta_2 + \text{Pb}\{\Theta\,\text{N}\Theta_2\,\text{N}\Theta_2 + \left.\begin{matrix}\text{H}\\ \text{H}\end{matrix}\right\}\Theta$$

Carbonate of lead. | Nitric acid. | Carbonic anhydride. | Nitrate of lead. | Water.

Sulphuretted hydrogen blackens it, in common with all the other salts of lead, by forming a sulphuret of lead; this renders colours containing it changeable. It has been proposed to restore the original colours of paintings blackened by sulphuretted hydrogen by subjecting the painting to the action of oxygenated water. The sulphuret of lead is thus changed into a sulphate, which is white, like white-lead, and the colour is in this way restored.

Diplumbic Hydrate, $\left.\begin{matrix}\text{Pb}\{\Theta\text{H}\\ \text{Pb}\{\Theta\\ \{\Theta\text{H}\end{matrix}\right\}$.—This substance is obtained by precipitating a soluble salt of lead by potassa. The hydrate of lead is soluble in $\frac{1}{7000}$ of its weight of water; the alkalies in excess dissolve it readily. It is white in colour; when heated it loses water, and is converted into a reddish anhydrous protoxide.

Binoxide of Lead (*Plumbic Anhydride*), $\text{Pb}\Theta_2$.—Red-lead, as we shall presently see, may be considered as a plumbate of lead. When acted upon by the acids, it gives up to them the elements of the protoxide of lead, and there remains a puce-coloured powder, which, when washed and dried, constitutes plumbic anhydride, $\text{Pb}\Theta_2$. This substance may also be obtained by acting upon the protoxide of lead, in suspension in water, with hypochlorous acid.

The binoxide of lead is an acid anhydride; it combines with the bases and gives crystallized salts. Frémy obtained, by heating this substance with potassic hydrate, a crystallized plumbate of potassa, to which he has applied the formula $\text{Pb}\Theta_2, \text{K}_2\Theta + 3$ aq., but which might be written in a more rational manner $\left.\begin{matrix}\text{Pb}\\ \text{K}_2\\ \text{H}_2\end{matrix}\right\}\Theta_4 + 2$ aq., thus referring it to the type of the normal plumbic acid

$\left.\begin{matrix}Pb\\H_4\end{matrix}\right\}O_4$. When heated with an acid, plumbic anhydride loses oxygen, and is converted into a salt of lead; hence it follows that a compound of plumbic anhydride and sulphuric acid is a powerful oxidizing agent.

$$\underset{\text{Plumbic anhydride.}}{2PbO_2} + \underset{\text{Sulphuric acid.}}{2\left(\begin{matrix}SO_2\\H_2\end{matrix}\right\}O_2\right)} = \underset{\text{Sulphate of lead.}}{2\left(\begin{matrix}SO_2\\Pb\end{matrix}\right\}O_2\right)} + \underset{\text{Water.}}{2\left(\begin{matrix}H\\H\end{matrix}\right\}O\right)} + \underset{\text{Oxygen.}}{\left.\begin{matrix}O\\O\end{matrix}\right\}}$$

Red-Lead, or Saline Oxide, Pb_3O_4.—This oxide may be regarded as a salt derived from the normal plumbic acid by the substitution of Pb_2 for H_4.

$$\underset{\text{Plumbic acid.}}{\left.\begin{matrix}Pb\\H_4\end{matrix}\right\}O_4} + \underset{\text{Hydrogen.}}{2\left(\begin{matrix}H\\H\end{matrix}\right\}\right)} + \underset{\text{Lead.}}{2Pb} = \underset{\text{Plumbate of lead (red-lead).}}{\left.\begin{matrix}Pb\\Pb_2\end{matrix}\right\}O_4}$$

Red-lead may indeed be prepared by mixing potassic solutions of plumbic anhydride and protoxide of lead; the red-lead will be precipitated in the hydrated state. For industrial purposes, red-lead is obtained by the simultaneous action of the air and heat upon the protoxide. So prepared, it does not offer a constant composition.

Distinctive Characters of the Salts of Lead.—The soluble salts of lead may be known by the following characteristics;—

1. Hydrochloric acid produces with them a white precipitate. This precipitate is insoluble in ammonia, which does not change the colour of it. It dissolves in boiling water, and is deposited in crystalline spangles on the cooling of the liquor.

2. Hydrosulphuric acid determines with them the formation of a black precipitate of sulphurate of lead, insoluble in the sulphurate of ammonium, and capable of being acted upon by boiling nitric acid, which converts it partly into a soluble nitrate and partly into an insoluble sulphate.

3. Sulphuric acid precipitates these salts white. The precipitate is soluble in tartrate of ammonia.

4. The soluble chromates give with the salts of lead a yellow precipitate soluble in potash.

5. The fixed alkalies give with them a white precipitate soluble in an excess of the reagent.

The best-known ores of lead are the sulphurets, carbonates, phosphates, arseniates, and sulphates; but we shall restrict our observations to the first named, as the quantity obtained from the others is commercially unimportant.

Galena or sulphuret of lead may be considered the matrix of all other lead ores; where they exist we are sure to find galena. It is always crystallized, however minute the crystals may be: the form of the crystals is a cube composed of rectangular plates. The colour of the ore is grey, similar to that of the polished metal, which it also resembles in lustre. It forms a grey metallic powder when rubbed. Its specific gravity is 7·3 to 7·7. Galena consists of 86·66 lead, and 13·34 sulphur. The ore contains also, at times, selenium, zinc, silver, copper, antimony, and other metals. Silver is the most valuable of these admixtures, and is generally extracted from the metal. German galena contains from ·03 to ·05 per cent. of silver; the English, ·02 to ·14; Swedish, ·76; the ore at Monroe, Ct., 3 per cent.; Eaton, N. H., ·1 per cent.; and that from the State of Arkansas may contain from ·003 to ·05 per cent. Galena occurs in beds and veins, both in crystalline and stratified rock, particularly in the carboniferous or mountain limestone. It is often associated with blende, iron ore, copper pyrites, and a variety of other lead ores. It occurs in gangue of heavy spar, calc spar, quartz, and other substances. Extensive deposits of it exist in the United States. The lead ores of Missouri extend over 3000 square miles. From the Mississippi River, about 60 miles above St. Louis, they extend 70 miles in length and 45 miles in width, over a sterile, rolling country, a highland prairie. The soil is reddish, coloured by iron, with clay, full of flint and quartz pebbles, to the depth of 10 or 20 ft. The lead region of Wisconsin is equally extensive as that of Missouri, if not more so; it comprises about 5000 square miles, extending into Iowa and Illinois. Galena is not free from foreign metals, of which silver is always present. This ore is therefore not only an accidental silver ore, but it may be considered argentiferous in all its varieties. The amount of silver in lead ore is easily ascertained by an assay, and ought to be thus determined when it is doubtful. As a general rule, the purest kinds of galena contain the least silver. The ores of the secondary and younger formation, particularly the ore of the limestone of that period, are always poor in silver. All deposits of galena which occur in heavy masses are also poor in silver. Galena which in small veins ramifies a stratified rock is generally rich in silver, and the smallest branches and forks are richest. The heaviest deposits of galena occur in limestone rock. The dimensions of a vein diminish as it penetrates sandstone strata, and grow still smaller in traversing shale or slate. In these rocks the metal is frequently replaced by clay or fragments of rock, and the vein does not show any ore.

Alloys of Lead.—A very extensive use of the alloys of lead is made in type metal. Nine lead and 1 antimony form common type metal; 7 lead and 1 antimony are used for large and soft type; 6 lead and 1 antimony for large type; 5 lead and 1 antimony for middle type; 4 lead and 1 antimony for small type; and 3 lead and 1 antimony for the smallest kinds of type. Type metal frequently contains tin, copper, bismuth, and other metals. Stereotype metal is generally lead alloyed with antimony in the rates of 4 to 8 of the former to 1 of the latter; to this are always added some bismuth, tin, and frequently a little copper. Soft solder varies from 66 lead to 33 lead in 100 parts, the rest is tin. A small amount of bismuth renders lead tougher; equal parts of each and bismuth form a brittle alloy. Lead and tin melt together in all proportions, forming a harder and tougher metal than either alone. A small addition of lead to brass causes the latter to be tougher and more suitable for use in the machine shop. Lead has a strong affinity for carbon; oxide of

lead mixed with fine carbon, and heated in a covered crucible, forms a black carburet of lead. Lead unites with potassium or sodium like antimony, but does not absorb so large quantities of the alkaline metals as the latter. Arsenic has a strong affinity for lead, and combines with it on covering melted lead with arsenious acid; arsenic-lead and oxide of lead are thus formed. This alloy, 98 lead and 2 arsenic, is used for making shot, by dropping the fused metal from a high elevation in a shot-tower into a basin of water; or throwing the fluid metal down a stack of limited height, in which a strong draught of air is produced by a blast machine. Mercury amalgamates very readily with lead. A rod of lead, bent in the form of a siphon, will transfer mercury from one vessel to another in the same manner as lamp-wick conducts oil. An amalgam of lead crystallizes similar to that of gold, from which the superfluous mercury may be separated by pressing it through buckskin. Copper and lead do not combine very readily, they require a white heat for union. The alloy thus formed, under the influence of a high heat, must be suddenly cooled, or both metals will separate in cooling. Lead may be separated from copper by liquation, as practised in refining tin; but all the lead cannot be removed by these means; a small quantity always adheres tenaciously to copper. This alloy is brittle; a little lead is injurious to copper. Organ pipes consist of lead alloyed with tin, about half and half. This alloy is cast, instead of rolled, in the desired form of sheets, in order to obtain a crystallized metal, which produces a finer tone. The sheets are formed in casting the metal on a horizontal table, the thickness is regulated by the height of a rib, or bridge, at one end, over which the superfluous metal flows off. The rough sheets thus obtained are planed by means of a carpenter's plane, bent up, and soldered.

Manufacture of Lead.—Although lead may readily be revived from its ores by applying a moderate heat and by simple means, yet, to obtain as much metal as possible at the least cost, has given rise to a variety of forms in furnaces and methods in the treatment of ores. Galena is reduced simply by melting it in a black pot. If a backwoodsman wants shot or bullets, he will kindle a fire in a hollow tree or an old stump of a tree, place some galena on the charred wood and melt it down. After cooling, he finds the metal at the bottom of the hollow. Formerly lead was smelted in log furnaces, in Missouri—a rude kind of square furnace, constructed of logs or stones.

In the system of smelting lead ores there is more variety than in any other class of smelting operations. The ore is roasted, crushed, and washed, preparatory to smelting, and these preparations are attended to with greatest care in Europe. We shall describe a few methods, and allude to such apparatus and operations only as are approved of at the present time.

An ordinary method of smelting lead is to pick the ore well by hand and remove gangue, which consists chiefly of heavy spar and quartz, and then smelt it in reverberatory or blast furnaces. The rich slags obtained by these processes are once more subjected to smelting in a slag furnace. There is not much difference in the form of the reverberatory furnaces for smelting lead or other metals. The furnace hearth for smelting lead is about 8 ft. long and 6 ft. wide; the hearth is 24 or 26 in. above the bottom. There are two or three small work doors on each side of the furnace, beside the tap-hole for the metal, and one for the scoria. The hearth is formed of poor refractory slags, firmly rammed down to form a basin towards the tap-side. From this side the metal is run into an iron kettle, from which it is ladled into moulds. In the middle of the roof there is an aperture for charging the ore into the furnace.

When the furnace is heated and charged with about a ton of ore, a gentle heat is applied for the first couple of hours. All the doors are closed during this interval, and the register at the chimney is lowered. During this process of sweating, some metal is separated, and gathers in the basin of the furnace. When the ore is thus uniformly heated, some fine charcoal is thrown into the furnace, and mixed with the slag. The metal thus formed is tapped off, the heat raised, and then the slag is diligently stirred. When the charcoal mixed with the ore is nearly consumed, more is thrown in, and the slag and coal are turned over together by means of paddles, or iron bars flattened at one end. This operation of alternately throwing in fine coal, mixing it with the ore and tapping metal, is continued until nearly all of it is exhausted from the ore. The heat in the furnace is a dull red heat, kept up rather by means of the burning sulphur than the combustion of any fuel in the grate.

A form of reverberatory furnace used in England is termed the Flintshire furnace, Figs. 4912, 4913. An arched air-valve extends longitudinally under the bed, and at the fire-bridge end

4912.

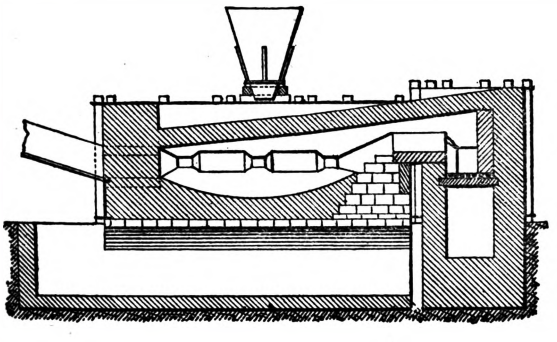

4913.

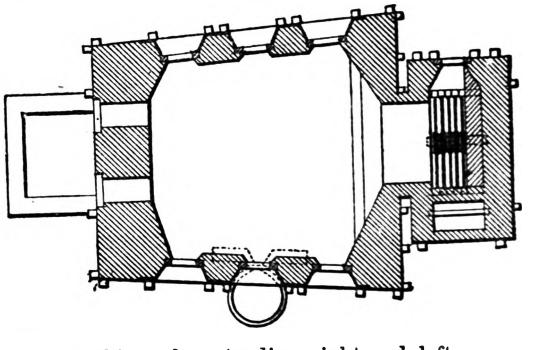

it communicates with the external air. On the crown of this arch, extending right and left, a level course of brickwork, called the cramp-course, is laid; and on this are placed iron cramps, which hold the lower ends of vertical wrought-iron standards. Upon the cramp-course a concave bed of common brickwork, grouted with lime mortar, is raised solid, sloping from the back as well

as from each end to the tap-hole in front, the bricks being set gradually back in each successive course. At the front and back are openings at equal distances, and of the same dimensions. These openings are formed by strong cast-iron door-frames, bevelled off at the top towards the interior of the furnace and at the bottoms, that the frames may stand firmly, with a slight inclination inwards. In front of both series of door-frames, and on a level with the bottom of the openings in these frames, extends a cast-iron plate about 10 ft. long, 7 in. wide, and 2 in. thick, set flatwise and horizontally. On the bevelled tops of each series of door-frames rests inclined a strong flat plate of cast iron, to support the roof of the furnace on each side. In front of each series of door-frames, plates or jambs of cast iron, about ¾ in. thick, are placed vertically. There are four castings for each series, those at the ends, right and left, being different from those on each side of the middle door. On the sloping edges of these jambs at the top rests inclined the cast-iron plate above mentioned; thus each door-frame is recessed. At the front of the furnace, below the middle door-frame, is a large plate of cast iron, called the tap-hole plate, strengthened by a longitudinal projecting rib at the top and bottom. In the middle of the tap-hole plate is a narrow vertical opening, fitted with a hinged door, and below the bottom of this door is the tap-hole. Immediately under the tap-hole plate, and facing the tap-hole, is a pot of cast iron, much thicker at the bottom, called the lead-pot, lead-pan, or lead-kettle, and contiguous to the tap-hole is a notch. The bed is covered in above with a low flat arch firmly supported on either side, and extending from the end wall of the fire-place to the opposite or flue end of the furnace. Immediately above a line drawn from the middle of the door-frame nearest the fire-place at the front to the middle of the opposite door-frame at the back, the arch presents a very obtuse angle, upon the importance of which, says Percy, stress is laid by the builders of these furnaces. From the middle of this line to the lower surface of the arch vertically above the distance should be 17 in.; from the middle of a line drawn from the door-frame nearest the flue to the opposite door-frame the distance to the top of the arch vertically above should be 13 in.; and from the middle of the top of the fire-bridge to the top of the arch vertically above it the distance should be 19 in. In the roof facing the middle door-frames, but nearest that at the front, is an opening through which the furnace is charged from a bin or hopper above. The fire-hole for charging coal is at the back, and the grate is freed from clinker or cleaned at front. Above and in front of the ash-pit at the front is a short flue for carrying off any vapour that may proceed therefrom. An open space is left for the free circulation of air between the inner fire-place wall and the adjacent end wall of the bed. The upper part of the latter wall under the fire-bridge is supported by a strong cast-iron plate, called as usual the bridge-plate. At the opposite end of the furnace are two rectangular flues, that nearest the back larger than the other. The object of this difference is, it is stated, to cause more flame to pass over the higher part of the bed contiguous to the larger flue. Both openings communicate with a common flue connected with a high stack; and that flue is provided with a damper, of which much use is made when the furnace is in operation. At the flue end on the outside there are recessed openings, corresponding to the two flues, through which access to them may be gained. They are closed with fire-brick. The lead-pot is firmly held in its place by a wrought-iron hoop. The space over the roof between the surrounding vertical walls is more or less fitted with ashes or sand to lessen loss of heat by radiation.

The working bottom of the furnace is usually made of the grey slag supplied by the furnace itself. The slag having been broken up in pieces of about the same size, road metal is thrown into the furnace, previously made red hot, spread over the brick foundation, and then melted. When liquid it runs into the lower part or well of the furnace, where it is allowed to cool until it becomes pasty, in which state it is spread by rakes over the brick foundation, worked into the desired shape, and afterwards left to solidify by cooling.

The usual charge for a furnace is 21 cwt. of ore, with draughtage calculated to cover the moisture in the ore. The furnace being barely red hot, after working off the previous charge the ore is let fall from the hopper or bin through the hole in the arch underneath, spread pretty evenly over the bed, care being taken to prevent any of it from dropping into the deepest part or well of the furnace, and frequently stirred and turned over for two hours. During this operation the temperature in the furnace is regulated by the damper, and the doors are left open or only partially closed in order to admit the requisite quantity of air. Constant stirring and the highest temperature compatible with the absence of pastiness or clotting are the essential conditions of this stage. At the end of the two hours the grate is freed from clinkers and filled with coal, and the fire urged until the charge becomes semi-liquid, and any portion of it which may not have run towards the tap-hole is raked up to that which remained on the upper part of the furnace bed. The fire-door is now opened and the temperature lowered until the charge acquires the consistency of stiff paste, when the whole of it is pushed towards the bridge. The fire-door is then closed, and the charge melted down as quickly as possible into the well; slaked lime in powder is thrown in and raked over the surface of the melted mass. The slag and unreduced portion of ore being thus rendered sufficiently stiff, are again set-up on the sloping sides of the bed, there left to cool a little, and afterwards remelted. Lime again added, the slag is pushed back from the surface of the lead and left to drain a little, the lead tapped, and the slag is then raked out of the furnace in pasty lumps, termed grey slag.

In Germany generally the ores are purified by hand; washed, stamped, and washed again, and roasted with salt, or iron, or iron ore.

The roasted ore is smelted in blast furnaces, which are from 12 to 14 ft. high. The front or tymp of the furnace is walled up with bricks, which are temporarily put in with clay mortar. The width of the furnace is from 12 to 14 in. square or oblong. The hearth, or bottom of the furnace, is formed of a mixture of loam and charcoal dust firmly rammed in. The basin outside of the tymp contains the lead, which is tapped off by opening a tap-hole communicating with its bottom. The slags are conducted on a slope to a basin wherein they are accumulated for re-smelting.

This furnace may be fed either by charcoal or coke; the latter requires a blast somewhat stronger than the former, but in no case more than ½ or ¾ lb. pressure. A fan-blower is sufficient for charcoal; coke requires a cylinder blast. Coke operates as well as charcoal, and yields equally as much and as good metal from the ore as the latter. In working the furnace it is warmed previously to charging ore, which is mixed with fluxes, such as litharge, iron ore, calc spar, fluor spar, or other substances. Fuel and ore are charged alternately, as at any other blast furnace. The blast is gently urged in case charcoal is the fuel. The metal, or metals, gather below the tuyere in the basin of the hearth, and separate into various strata; pure lead and all the silver is at the bottom; upon this there is a stratum of alloys of lead and other metals, and on the top a stratum of matt which is covered by the poor silicious slags. The latter may be carefully drawn off and removed without drawing any matt or metal. When the matt reaches so high as to admit very little slag on its surface the blast is stopped, the tuyere temporarily closed up, and the metal tapped into the basin. As the purest metal is below the matt, and the furnace tapped at the bottom, this flows out first; and when the drawing is not hurried, it may in some measure be separated from the impure metal and the matt on its top. Generally the metal is tapped from the furnace at intervals of eight hours, and very little is left in the furnace. When it is thus removed, the hearth is cleared of adhering cinder by opening the tymp, and the operation goes on as before. A continual blast of six days and nights' work may thus be made, after which the furnace is cooled and thoroughly repaired. In the basin before the hearth, into which the metal has been tapped, and which is kept well heated, the metals separate again into different strata, which may be obtained after removing the cold crust of slags as it forms on the surface. As the purest lead is at the bottom of the basin, it is ladled out after the upper strata of alloy and matt have been removed. In this operation the poor slags are thrown away, and the rich ones and matt are re-smelted with the ore.

The best and purest kind of lead is smelted in a modification of the Flintshire reverberatory furnace, known as the flowing furnace, Figs. 4914, 4915. Its chief points of difference are that it

4914.

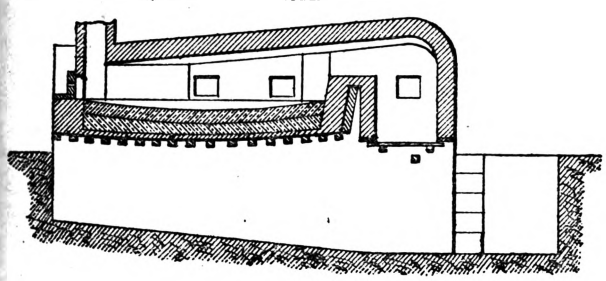

4915.

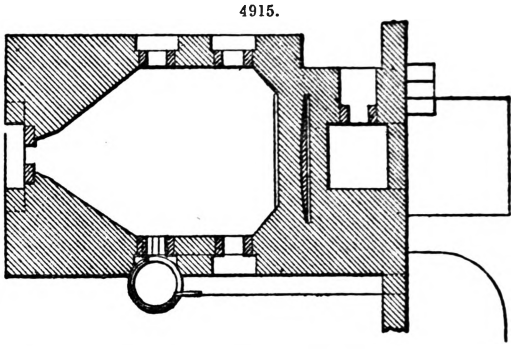

has a smaller number of working openings. The bottom is carried on bars of iron, and there is a small pit at the side arranged for the overflow of the regulus from the lead-pot. The furnace is usually lined with fire-brick cased with granite, and has the working bottom lined with slag. The hearth is very much sloped towards the small pits *a*.

The operation in this furnace is similar to that for other reverberatories. The ore is successively sweated, roasted, and reduced. The slags which remain after that operation are reduced in the blast furnace. In front of the furnace, as we have stated before, is a cast-iron pan, or kettle, into which the lead is tapped, and from which it is ladled into the pig moulds. In these pans very large crystals of lead may be obtained, when the metal is suffered to cool slowly.

At the Hartz Mountains, in Northern Germany, galena is reduced by the assistance of iron in blast or elbow furnaces; see Fig. 3089. When constructed for using coke, these furnaces are very low, or not more than 3 or 4 ft. high; for charcoal they are from 18 to 20 ft. high.

The ore which is smelted in these furnaces is always extremely well prepared, pounded, and washed. Instead of iron ore, granulated cast iron is used with success. The ores may be very impure, but the lead is always obtained in great purity.

English Ore-hearth.—Fig. 4916 is a vertical section of the ore hearth from front to back. The hearth consists of twelve pieces of cast iron.

4916.

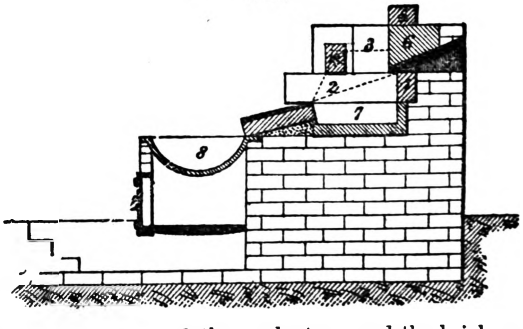

3 is the hearth bottom, measuring in the North of England 22 in. square; the bottom 3 in. thick, and the sides 3 in. by 4½ in.; it is open in front. Between the hearth bottom and the bed on which it rests is interposed a layer of sand a few inches thick. The work-stone slopes 3 in. from the front edge of the hearth bottom; it is 3 ft. long, 1½ in. broad, and 2½ in. thick, having a raised border 1 in. high on its two sides and in front, with a channel 2 in. wide and 7 in. deep running diagonally across it. The space between the under surface of the work-stone and the brick or stone bed is generally fitted up with fire-clay, or with a mixture of slime-ore and bone ashes tempered with water.

2 is the bearer, a square block 6 in. on the side and 26 in. long. There is one on each side, overhanging somewhat the sides of the hearth bottom, and thus tending to keep it firm in its place.

1, back stone, 28 in. long, 6½ in. high, and 5 in. broad. The bellows nozzle rests upon this stone.

6, pipe-stone, 10 in. square and 28 in. long, with an opening on the under side to receive the nozzle or tuyere.

5, under back-stone, 28 in. long, 4 in. high, and 5 in. wide. This completes the back of the hearth.

4, fore stone, 26 in. long, 6½ in. high, and 5 in. broad.

3 and adjacent stone, key-stones 10 in. square, two on each side. The two nearest the back are placed upon the bearers, so as to be level with them on the inside. They are 22 in. apart, but the two in front are made to lie against the ends of the fore stone 4, and are 26 in. apart.

8, cast-iron pot to receive the lead as it strikes down the channel in the work-stone.

The fore stone is movable to a certain extent, and can be placed 10 in. from the back stone by being put in contact with the two key-stones nearest the back. If necessary it can be raised by the insertion of a fire-brick at each end between it and the bearer. Its usual position is 12 in. above the upper edge of the work-stone. The various parts of the hearth are secured in their places by brickwork, and at the top it is finished level with masonry to receive any particles of ore, called hearth ends, which may be expelled by the blast or projected by decrepitation. Each hearth is placed under a chimney.

The blast is always directed downwards to the upper edge of the work-stone, as indicated by the lower dotted line, Fig. 4916.

The duration of the smelting shift is from twelve to fifteen hours. The ore having been previously calcined, is put upon the surface of the fire between the fore stone and pipe-stone by 10 or 12 lbs. at a time. The fire being made up into shape represented by the dotted line, with the flame and blast principally issuing between the fore stone, which is kept at the proper height by a fire-brick, and work-stone, a stratum of ore is spread upon the horizontal surface of the brouse or semi-reduced agglomerated ore, and the whole suffered to remain exposed to the blast for about five minutes. At the end of that time one man plunges a poker into the fluid lead in the hearth bottom below the brouse, and raises the whole up at different places, so as to loosen and open the brouse, and in doing so to pull a part of it forward upon the work-stone, allowing the recently-added ore to sink down into the body of the hearth. The poker is now exchanged for a shovel, with which the brouse is examined upon the work-stone, and any lumps that may have been too much fused are broken to pieces; those which are so far agglutinated by the heat as to be quite hard, and are further known by their brightness, the grey slags, being picked out and thrown aside to be afterwards smelted in the slag hearth. A little slaked lime in powder is then spread upon the brouse, which has been drawn forward upon the work-stone, if it exhibit a pasty appearance; and a portion of coal is added to the hearth, if necessary, which the workman knows by experience. In the meantime the opening through which the blast passes into the hearth is cleared with a shovel and a peat placed immediately above it, which is held in its proper situation until it is fixed by the return of all the brouse from the work-stone into the hearth. The fire is made up again into the shape before described, and the same manipulations are repeated. At every stirring a fresh peat is put above the nozzle of the bellows, which divides the blast, and causes it to be distributed all over the hearth; and as it burns away into light ashes an opening is left for the blast to issue freely into the body of the brouse. The soft and porous nature of dried peat moss renders it very suitable for this purpose, but in some instances, where a deficiency of peats has occurred, blocks of wood of the same size have been used with little disadvantage.

In using the ore hearth the following precautions should be observed;—The blast should be carefully regulated; if too weak the ore is not reduced, and if too strong the contents of the hearth are melted. Both these evils should be avoided, but no special rules can be given, as the same blast is not equally suitable for every kind of ore. In no case should the blast be more than sufficient to reduce the ore; the blast should be as much divided as possible, and made to pass through every part of the brouse; the hearth should be vigorously stirred at intervals, and a portion of its contents exposed upon the work-stone, when the partially-melted lumps should be well broken to pieces, and the grey slag picked out. This breaking to pieces, and exposure of the hotter part of the brouse upon the work-stone to the oxidizing action of the atmosphere, has a beneficial effect in promoting the reduction of lead, and lead always flows most abundantly out of the hearth, immediately on the brouse, after that treatment. The quantity of lime used should not exceed what is needed to thicken the brouse to the proper degree, as it does not in the least contribute to reduce the ore by any chemical effect; it is used to render the brouse less pasty, if from the heat being too great, or from the nature of the ore.

Theory of Smelting Lead Ore.—The reduction of lead ores is extremely simple. In all instances of smelting, a considerable loss of metal is experienced, which has been the cause of a close examination of the process, and we may assert that no metallurgical operation is more thoroughly and scientifically known than the reviving of lead. This metal is in most instances the bearer of silver, the bulk of which is obtained from lead ores. In order to investigate the cause of the loss in lead metal, and also a suspected loss in precious metal, much labour and ingenuity have been bestowed on this subject.

In the smelting of crude galena in a reverberatory furnace the sulphuret is at the commencement of the operation deprived of a part of its sulphur by heat; metal is formed, and as oxygen finds access to the ore, oxide of lead, and consequently sulphate of lead, is also formed. The proportion of these substances depends of course on the degree of care bestowed upon the process. When after two hours the roasting of the ore is so far completed as to admit of its reduction, the

heat is raised so high as to form a pasty mass. Oxide of lead and sulphuret of lead now mix completely and form metal, sulphuret, and sulphate, from which mixture the metal parts by force of gravitation. In mixing carbon with the slag the sulphate is reduced to sulphuret, which is again deprived of its sulphur by heat. Thus, by alternate oxidation and reduction of the ore, a certain amount of metal is abstracted. The revival of lead from the slag, causes it to be more refractory at the end to the operation than it was at first, because the sulphuret, or the oxide of lead, which was the cause of its fusibility, is chiefly removed. When the slags are so pasty as to enclose grains of metal which have not the power of separating by gravity or cohesion, they cannot yield any metal, although the whole of it may be revived. In order to obtain all the metal from the slag, it ought to be at least as fluid as the metal itself at the same degree of heat. Such a slag is not easily obtained without oxide of lead, or sulphurets of other metals. Salts of any kind, such as fluorides, chlorides, and sulphates, form the best auxiliaries in this operation; and if present only in a small quantity they are of service. Lead, bismuth, antimony, and in fact all the fusible metals, will readily separate from other matter than metals, in virtue of their gravity and cohesion, but it is a necessary condition of their separation that the matter with which these metals are combined should be fluid. The metal cannot separate from a dry slag, an agglutination of its particles is necessary before it can subside.

A fluid cinder is necessary not only for the agglutination of the metallic particles, but also for their production. When a dry or pulverulent mixture is mixed with carbon, oxygen may be abstracted from it by the carbon; but as the newly-formed particle of metal is exposed to the influence of oxygen—which it will absorb from the products of combustion if it cannot obtain it in another form—it will oxidize as quickly as it is reduced. If metallic oxides, or sulphurets and slags, are fluid, the addition of carbon to the mixture will deprive the oxidized metal of oxygen; and if the metal as well as the slags continue to be fluid, the latter will protect the first against oxygen. The fluidity of the slags will also admit of the subsidence and gathering of the metallic particles.

In smelting galena in a reverberatory, we deprive the slags gradually of the means of fluidity by abstracting that metal from them which has been the cause of their fusibility. This abstraction can be carried only to a certain point. When the slags cease to be fusible at the heat by which the metal melts, they must cease to furnish metal any further, however much may be contained in them. We perceive therefore very readily that the quantity of metal retained by the slag depends entirely on its fusibility, and not on its composition. Lead, like the precious metals, separates easily from all other matter, and thus far the composition of the slags has little effect on its quality. If in operating on galena, fluxes can be introduced which continue the fluidity of the slags at a moderate heat, all the lead, even the last particle of it, may be obtained.

The fluidity of slags depends as well on heat as on their composition; we may continue the fluidity of a slag by increasing the heat; this, however applicable with some metals, is not the fact with lead. When the heat on metals is raised beyond a certain degree, they evaporate. In any smelting operation, therefore, it should not exceed that degree. Metallic lead, and especially oxide of lead, sulphuret and salts of lead, are very volatile, and a strong heat on them must be avoided. It must be therefore the practice to smelt lead by as low a heat as possible; and in order to accomplish this, a mixture of ore must be prepared which affords a fusible slag without lead.

Lead combines very readily with other substances under certain conditions, and in most instances in definite proportions. Iron will combine with sulphur in all proportions, but not so lead. There are various combinations of lead and sulphur, which, when exposed to heat, form the combination which we recognize in galena. If less sulphur is present, metal and sulphuret are formed. This accounts for the revival of pure lead from galena that is partially roasted. In the composition of reverberatory and blast-furnace slags, we find the means of detecting the true conditions under which lead is smelted most profitably.

A slag which had been deprived of its metal by a long-continued operation in the reverberatory —sixteen hours' work—contained still 13 per cent. of oxide of lead, 53·5 oxide of iron, 11·5 barytas, and 5 sulphuret of lead; also 17 silex. This shows that the last particles of sulphur will adhere to lead, when all other substances are oxidized. A reverberatory slag, entirely free from sulphur, contained sulphate of barytas, 51; sulphate of lime, 10·5; fluoric acid, 1·5; protoxide of iron, 3; and oxide of lead, 34. A slag obtained from impure galena, that is, an ore from which heavy spar could not be separated, was composed of 30 sulphate of lead, 24 sulphate of barytas, 5·6 gypsum, 8·5 fluoric acid, 14·7 carbonate of lime, 2 sulphuret of lead, 5·6 protoxide of iron, 8 oxide of zinc. A very fluid slag which flowed off with the metal, contained sulphate of lead, 9; sulphate of barytas, 30; sulphate of lime, 33; fluoric acid, 13·6; lime, 8·8; oxide of iron, 2; oxide of zinc, 2. This contains the least lead, and large quantities of alkaline salts; all the alkaline earths are combined with some acid, which renders the compound fluid.

The last-mentioned slag is produced from crude galena which has been merely freed by hand from impurities, and for these reasons we invite attention to it. It shows a very rational operation, and one most suitable for a rough country. The ore is charged in the furnace in the common manner, and reduced so far as it will furnish metal. When the slag becomes too stiff for yielding metal, some finely-pulverized fluate of lime is thrown in and mixed with the mass. This renders the barytas and gypsum fusible, and the reduction of galena may take place. So long as the fluidity of the slag is continued, lead is formed. To render this operation profitable, fluate of lime should be used in a considerable quantity; but as this cannot be obtained always, we propose the substitution of chlorine for fluorine, which possesses in as high a degree as the latter the quality of fluxing sulphates. In this instance, gypsum and common salt may be pulverized together when damp. These form a very fluid slag with barytas, lime, iron, and other metals.

The following reverberatory slag shows that lead can be removed almost entirely from the ore, in oxidizing the mixture completely. A slag from zinc ore contained 64·5 protoxide of iron, 2·5 oxide of lead, 1 oxide of zinc, 2·5 alumina, and 29·5 silex. The iron and silex here form the

slag. It must be observed that in precipitating all the lead from a slag by means of iron, the metal will contain much iron, and be otherwise impure. When an ore contains much zinc, there is hardly any other profitable way of smelting it than to flux by means of iron, either with iron ore or pyrites; all or most of the zinc remains then in the slag.

The slags of blast furnaces differ somewhat from those of the reverberatory, in containing more silex, and in most cases less lead. A slag which was formed at a moderate heat, and considered as exhausted of lead, contained 34·4 oxide of iron, 6·6 oxide of lead, 7 lime, 9 sulphuret of iron, a little manganese and oxide of zinc, and 34·8 silex. A slag from an argentiferous galena contained protoxide of iron, 45·4; magnesia, 11·2; sulphuret of iron, 2; alumina, 3·9; and silex, 36·3. The following proportions show that a large quantity of lime is of no advantage;—protoxide of iron, 25; lime, 24; zinc, 10·6; oxide of lead, 3; alumina, 7; silex, 28·5. The following is a profitable slag;—protoxide of iron, 34·8; oxide of zinc, 6·8; oxide of copper, 2·4; manganese, 7; lime, 6·6; magnesia, 6; oxide of lead, 2; sulphuret of iron, 12; alumina, 3·4.

When ores are exposed to a low heat they hardly enter into any combination with silex, and of these the oxides only. Sulphurets, sulphates, chlorides, fluorides, and in fact all other metallic compounds, do not combine with silex; it is only after all other matter is evaporated that the oxides unite with that acid. We may smelt lead to perfection without forming any silicate, but this requires the presence of a large quantity of chlorine, fluorine, or some other permanent acid. In roasting the ores before smelting we are deprived of the advantages resulting from the fusibility of the sulphurets and acids, and are compelled to form silicates, because those substances which form a fluid slag in the low heat of a reverberatory, evaporate in the heat of a blast furnace, and are lost. When it is in our power to form a fusible slag, either by means of fluates or chlorides and sulphates, it is more profitable to smelt in a reverberatory than in a blast furnace, and precipitate the lead to within a few per cent. in the first and only operation. In this instance the ore needs no crushing and expensive washing, a removal of the coarsest pieces of quartz and of the loam is the only labour necessary to be performed on it. The presence of quartz will not influence the result, because when other acids are present it does not enter into combination. If no materials are at hand to form a fusible slag, either by natural or artificial means, then it is necessary to roast the ore and smelt in the blast furnace. In this instance the ores must be roasted, because the sulphurets are very volatile, and will not resist the heat of that furnace. The most profitable flux is the protoxide of iron. Lime or magnesia, and other alkaline earths, do not form sufficiently fluid slags to be used profitably.

When circumstances render it necessary to smelt in blast furnaces, the operation ought to be conducted in such a manner as to obtain all the lead at one smelting. This appears sometimes to be difficult, but it is not so where cheap iron ore can be obtained in sufficient quantity. When a slag or ore is to be exposed to smelting in a blast furnace, it ought to be thoroughly oxidized; because if any sulphur is left in it, even in the form of sulphate, lead and zinc are the first to evaporate. Lime does not remove sulphur, but combines with it, like all other alkalies. Iron, because it absorbs sulphur, and as easily parts with it, is the most suitable substance to mix with the sulphureous ore for the purpose of oxidation; it forms a fluid slag at quite a low heat with silex, and is thus far the best flux in the blast furnace. Manganese serves equally as well as iron, and may be substituted for it, but no other metallic oxide can be substituted for these two.

When sulphurets of lead are roasted in the air, they are never entirely liberated from sulphur; the most carefully roasted lead ore contains sulphur. Galena roasted with extreme care, in a heap, contained oxide of lead, 18; sulphate of lead, 86; sulphuret of lead, 10. The same galena, roasted during seven hours in a reverberatory, formed metallic lead, and the roasted ore powder consisted of oxide of lead, 30; sulphuret of lead, 46; metallic lead, 17; iron oxide and silex, 7. When other metals are present besides lead, such as iron, zinc, and others, they are oxidized before all the sulphur is removed. A persevering roasting of ten or twelve hours in a reverberatory furnace will remove much of the sulphur, but from 8 to 10 per cent. of sulphate of lead remains in all instances. The presence of a large quantity of silex, say 25 per cent. of the ore, is the best means for the removal of sulphur. From such ore the last trace of sulphur may be removed in the reverberatory, or in roasting it in the open air. It would not make any difference by what means sulphur is removed in roasting, and silex might serve quite as well as iron, if it could be removed advantageously before bringing the ore or slag into the blast furnace.

In practice at the furnaces, we find the above principles operate under forms modified by local circumstances. The smelters at a reverberatory furnace alternately cool and heat the furnace, in order to oxidize and reduce, by means of granulated coal. A fluid slag cannot quickly oxidize; it is like melted metal in this respect; there are no points of contact for the oxygen. The drying up of the slags, by cold or drying flux, such as lime, facilitates the oxidation of the sulphuret. The best plan is to run the metal and slags out continually, the first into a heated iron pan, the latter over damp charcoal-dust. This mode of operation causes oxidation quicker than any other. When the slag is cooled, it may be recharged or reserved for the slag furnace. Slack coal should never be mixed with the slag for reduction; a granulated coal assists in forming large globules of metal; it affords points of oxidation for the slag, and does not stiffen it so much as fine coal. When litharge is reduced in a reverberatory, it does not work well if both coal and litharge are fine; this is not from want of affinity or other secret causes. The powdered mass does not admit of the formation of a large globule of metal, or of motion in the fluid metal, which is necessary for agglutination. And as oxide of lead, particularly when mixed with a refractory substance, does not melt at so low a heat as metallic lead, the whole mass must be heated until the mixture of oxide and coal begins to become fluid, and admits of the subsidence of the metal. Litharge is easily reduced in the reverberatory. A charge, consisting of 1 ton of litharge, may be smelted in 1½ or 2 hours, when in a granulated form, but when finely-ground litharge or fine coal is used, twice as much time is required. When the heat must be urged so high as to melt the litharge, the process is slow. We find the principle of the operation here to be different from that of smelting

ore; if, in the latter case, we work the ore dry, as litharge, we produce but little metal. The cause of this is, there are impurities and metal in close contact in the ore, and no large globule of metal can be formed, because the foreign matter interposes between the particles of metal.

The conditions under which successful smelting may be performed are therefore very plain. A fluid slag is in all cases required where impure ore is to be smelted; pure ore, or litharge, may be worked more dry than impure ore. Fusible slag may be produced by a variety of means, of which heat is the most available, but not the most profitable. High heat causes a loss of metal by evaporation; it brings foreign metals into the lead, which are injurious to its quality. Lead ought to be smelted at the lowest heat by which it can be melted. A low heat, or quick work, will produce the best metal in all instances, and as that kind of work demands less fuel and labour, too much attention cannot be bestowed on this subject. Fusible slag should be formed by means of fluxes, not by heat, which will, in most instances, remove those ingredients which cause fluidity. Protoxide of iron, which is most successfully formed of powdered hematite ore and carbon, forms readily a fusible slag, in the presence of chlorine, fluorine, sulphuric, phosphoric, or any other acid; but these acids are soon evaporated by a strong heat.

Smelters dislike the use of much iron in a reverberatory as well as in the blast furnace, because in its most fluid condition it acts upon the stones, bricks, and slags of which the hearth is formed, and causes their premature destruction. When the work is done on a fine charcoal or coke hearth, in the presence of much iron, it is reduced with the lead, and impairs its quality. We recommend for these reasons, for smelting lead, the application of cooled boshes, and cold cast-iron bottoms, such as are used in puddling furnaces. In the slag hearth and blast furnace, iron plates are generally used below the tuyere, and are lined with clay or coal-dust, but both these materials for linings are injurious as well to the quality of the metal as to the yield. There cannot be any disadvantage in surrounding a slag hearth with cooled iron plates, similar to a run-out fire for refining iron. A little more fuel may be used in smelting, but a more fluid cinder can then be employed than in any furnace, which of course tends to economize fuel, and causes a purer article of metal.

Lead Smoke.—At the smelting furnaces, particularly at those where the operation is performed at a high heat, a white smoke is thrown out at the tymp, or at the top of the furnace. This may be gathered in condensing chambers, as in Fig. 3089. Similar chambers may be annexed to reverberatories. This white smoke contains those metals which are in the ore. A reddish dust from a reverberatory contained 11 oxide of lead, 60 sulphate of lead, 2 arsenious acid, 15 oxide of zinc, 12 oxide of iron. When there is much zinc in the ore, and it of course evaporates, a large quantity of silver is carried away by it. Iron and coal are generally the colouring matters in the body of these deposits. It is always found to be chiefly oxide and sulphate of lead.

Action of Lead upon the Animal System.—The compounds of lead exert a deleterious action upon the animal system. Persons suffering from this action experience morbid phenomena, the intensity of which is variable. The first degree of saturnine poisoning is characterized by a violent and general disturbance of the system, and is known as lead or painters' colic. The second degree consists in the extension of the preceding pains, which are confined chiefly to the stomach, to the limbs, and especially to the joints; this is known as lead rheumatism. The third degree causes a paralysis of the limbs, which usually shows itself first in the extensor muscles of the wrist, and is termed lead palsy; and, lastly, in certain cases, disease of the brain may be induced, which generally terminates in delirium and death.

In the first stages the poison may be combated by means of powerful purgatives, which facilitate its elimination from the system. It has been proposed that men who work on lead should drink sulphuric lemonade, and often take sulphurous baths, followed by a copious use of soap. This preventive treatment is intended to hinder the absorption of the lead taken into the stomach as well as that deposited upon the skin. It appears, however, that the lemonade produces very bad effects, for, by rendering the lead insoluble, it fixes it in the intestines, where it finally gets absorbed. The best treatment in the case of lead colic consists in the use of purgatives and nitric lemonade.

See BULLET MACHINE. FOUNDING. FURNACES. ORES, *Machinery and Processes employed to dress.* SILVER.

Works on Lead:—Foster (W.), 'Treatise on a Section of the Strata from Newcastle-on-Tyne to Cross Fell in Cumberland,' 8vo, 1821. 'Records of Mining and Metallurgy,' by Phillips and Darlington, 12mo, 1857. Lamborn (J.), 'Metallurgy of Silver and Lead,' 12mo, 1861. Wallace (W.), 'On the Laws which Regulate the Deposition of Lead Ore,' 8vo, 1861. Percy (Dr.), 'Metallurgy of Lead,' 8vo, 1870.

LEVELLING. FR., *Nivellement;* GER., *Nivellirung;* ITAL., *Livellazione;* SPAN., *Nivelacion, Agrimensura.*

See SURVEYING AND LEVELLING.

LEVER. FR., *Levier;* GER., *Hebel;* ITAL., *Lieva;* SPAN., *Palanca.*

See MECHANICAL POWERS.

LIFTS, HOISTS, AND ELEVATORS. FR., *Monte, Charge;* GER., *Gichtanfzug.*

Lifts, hoists, and elevators, are a class of apparatus used for concentrating power at a particular point, and utilizing it to effect the raising or lowering of bodies. A lift is only properly so called when the raising medium is applied above, and should be called a hoist when it is applied below, or an elevator when it is continuous.

In many London warehouses an effective lift is used, arranged with four iron standards, which extend the extreme height of the lift, rest upon an iron bed-plate, and support the top frame. Upon the sides of the top frame are fixed two brackets. A sheave is attached to the outside of an axle working in bearings on the brackets, this axle carrying the lift pulley, and a toothed wheel gearing into a pinion which is fixed on another axle turning upon its outer end the friction-wheel of an Appold's brake, similar to that in Figs. 1268 and 4495. The cage is furnished at each corner with guide-wheels, which run upon the standards; it is attached by means of a rope with a counterweight

working in grooves at the side of the apparatus. The hauling rope passes over the sheave on the head-frame, and under another sheave mounted in a slot at the side of the bed-plate, and adjustable vertically. Both the hauling rope and the rope working the friction-strap are accessible from every floor the lift passes through.

An ordinary form of steam-lift used in the large London warehouses is shown in Figs. 4917, 4918. It consists of a cage suspended from a single chain, and running between light angle-iron guides outside the wall of the warehouse. At each floor is an external landing, supported by a girder, Figs. 4917, 4918, the goods from the cage of the hoist being delivered on to these landings. The total height of the particular lift, Figs. 4917, 4918, is 42 ft. 6 in., and the load taken up is

4917.

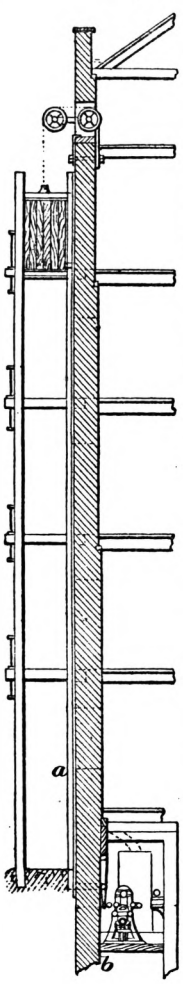

4918.

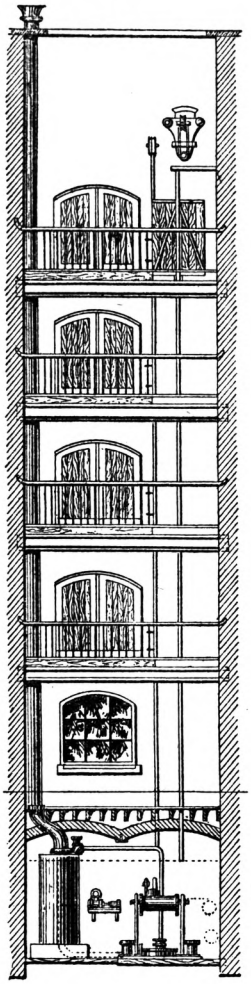

4919.

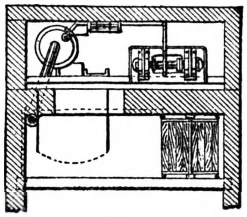

4920.

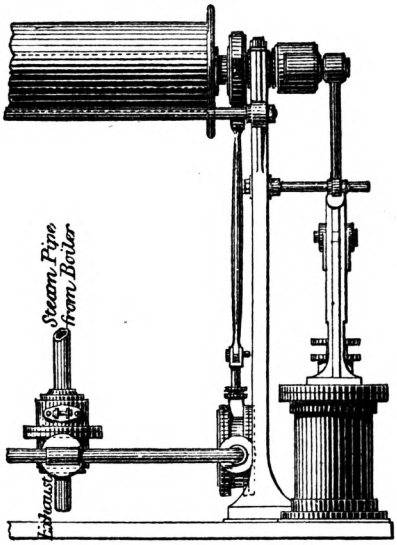

4921.

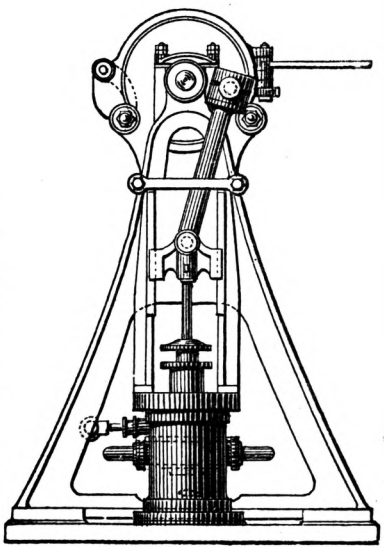

10 cwt., besides the weight of the cage, which is 4 cwt. The lifting is performed at the rate of 150 ft. a minute.

The chain from which the cage is suspended passes over two pulleys, and then down to the hoisting engine, which, together with its boiler, is situated in a cellar, Figs. 4917 to 4919. The hoisting engine, partly shown, enlarged, by Figs. 4920, 4921, has a pair of cylinders 7 in. in diameter, by 10 in. stroke, the connecting rods being coupled to cranks fixed at the ends of the shaft carrying the chain-barrel. This barrel is 9 in. in diameter, and is provided with a powerful brake, consisting of a strap which encircles an enlarged part of the drum, and which can be tightened by a screw, Fig. 4921. The lever by which this screw is turned can by means of a rod be moved from any one of the floors. The engine is fitted with a simple reversing arrangement, consisting of a valve by which the steam-exhaust passages can be interchanged; and provision is made for stopping or starting the engine from either floor. In practice the lowering is almost always performed by steam, the brake being but seldom used.

All American houses of business are provided with lifts for the purpose of raising goods from the street to the first story. So general is the custom of employing this means of receiving and dispatching merchandise, that the single-story house of the meanest tradesman of New York has at least a rope and pulley for lifting packages. The lift, which is fixed to the street wall of buildings, consists essentially of a platform about 5 ft. by 3 ft. 6 in., suspended by four chains, which, after passing over six pulleys above, are reduced to two as they descend, and are fixed to two windlasses having a common axis, and capable of being turned by four levers at once.

Fig. 4922 is an elevation, Fig. 4923 a plan, and Fig. 4924 a top view of portions of a New York steam-lift. Fig. 4925 is a section through *m n*; and Fig. 4926 a section at *o p*, Fig. 4924. A A are small steam-cylinders; B, C, D, belting transmitting motion from the pulley B to D, and thence by means of a screw and tangent-wheel to the drum G; H H, hauling rope running over the pulley N and lifting the cage; K K', regulating rope running under the pulleys J J and over the pulley R to the horizontal pulley Z which regulates the introduction of the steam; Q, movable counterweight.

4922.

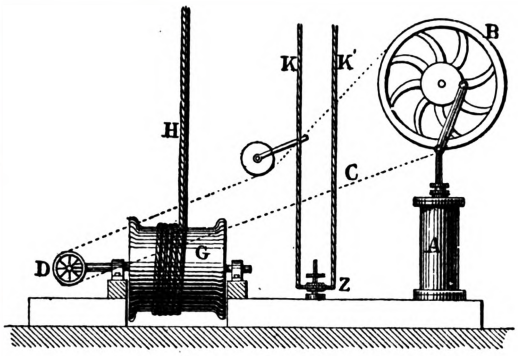

4924.

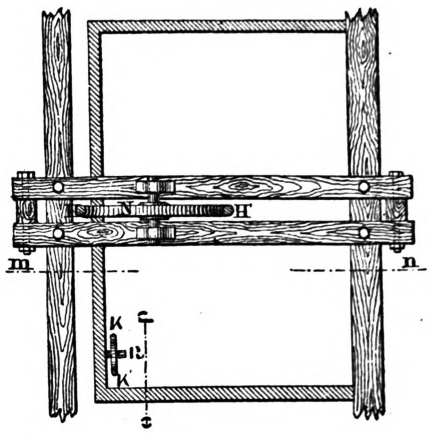

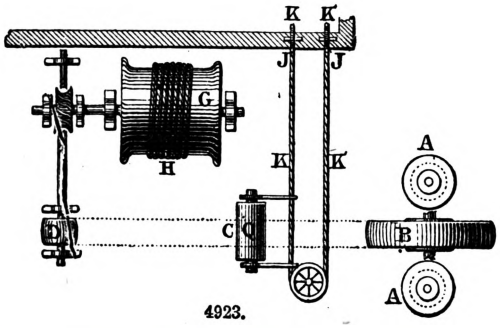

4923.

4925.

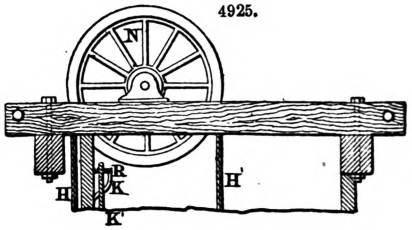

4926.

When the goods have been taken in and verified, they have to be taken up into the upper stories of the house; and for this purpose all the floors are pierced with a rectangular opening to allow the passage of a lift. The primitive system of the single pulley has been improved upon; on the one hand, by substituting a windlass at the top of the house for the pulley, worked by a man who is directed in his movements by a signal bell, and on the other hand by substituting a platform, rigidly fixed by means of four iron rods to a frame above, for the hook at the end of the rope. The necessity of keeping a man constantly at the top of the house may be avoided by providing a roller or drum in addition to the windlass, and passing the winding rope two or three turns round it. By bringing the end of the rope down again to the platform, it will constitute an endless band, and the lift may in this way be worked from below.

In many houses the lift almost wholly takes the place of staircases, both for persons and goods, for the *personnel* of the house and for strangers. In such cases the requisite motive power is much greater, and often the employment of steam-power becomes economically necessary.

The rectangular space in which the lift moves is usually lit by a row of windows one above the other on one side, and on the other side it is open to the landing-places corresponding to the different floors. The lift itself is sometimes a simple platform, sometimes a small room furnished with couches, adorned with mirrors, and, in the evening, lit with gas. These are to be found in the large hotels. The luggage, in this case, is placed in a special compartment beneath the floor of the saloon. The lift is suspended by iron or steel wire rope, passing over a pulley at the top and down, outside the left case, to the lower story, where the engine is erected. Two men only are required to work the lift; one to attend to the engine, the other to control the lift. Various appliances have been introduced to prevent accidents from over-winding, or from a breakage of the winding tackle, and the success which has attended their use seems to have averted all danger from this source.

When the platform of the lift is very heavy, a counterpoise is used. In Atwood's system the counterpoise weighs as much as the platform; they are connected by a rope which passes over a pulley above, and the space passed through is equal for both. In Otis's system, a counterpoise of twice the weight acts upon a drum keyed upon the same axis as another drum of twice the radius, around which the lift-rope is wound. The space passed through by the counterpoise is therefore half that passed through by the lift.

4928.

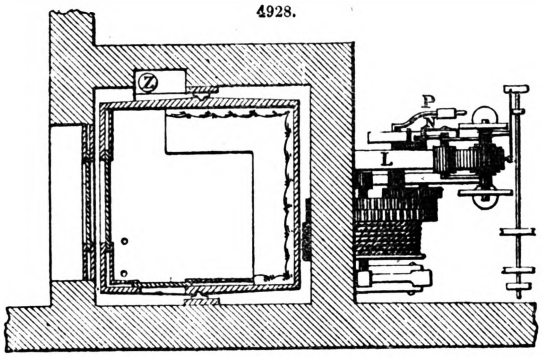

4929.

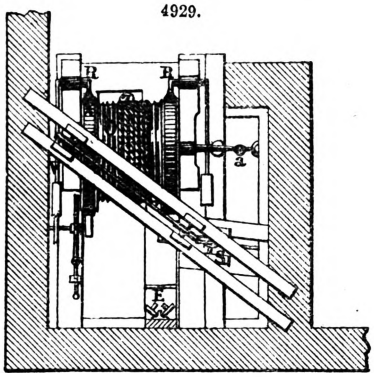

4927.

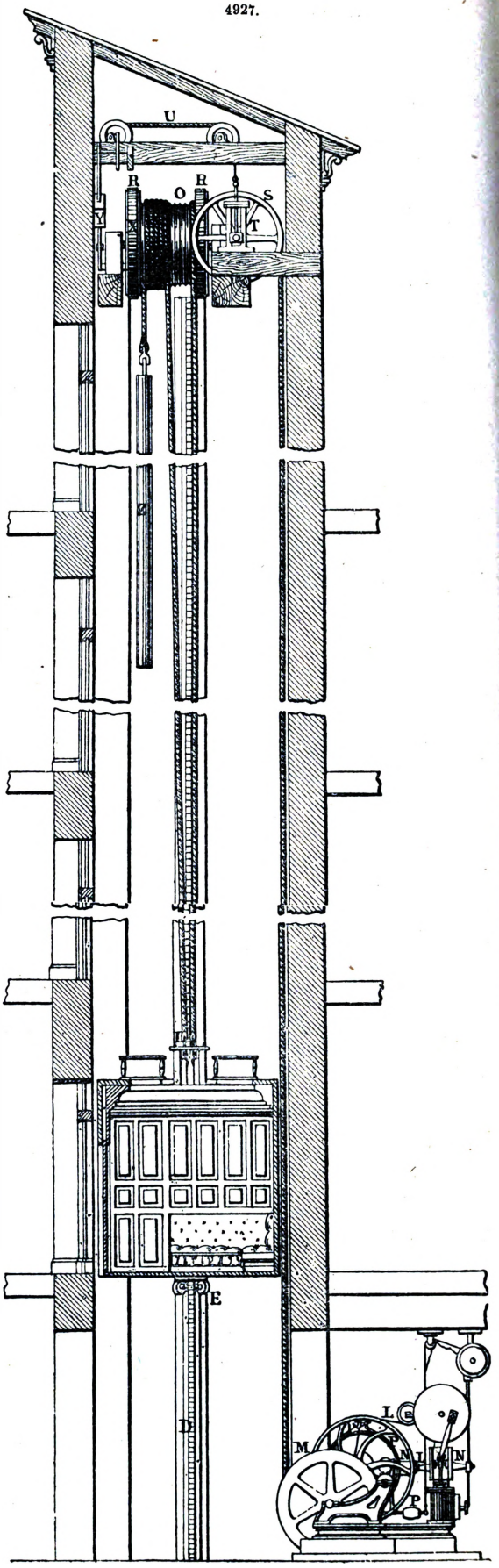

Figs. 4927 to 4929 are an elevation, plan, and top view of a safety passenger lift, by Otis Brothers, of New York.

The engine is double cylinder and reversible; both cylinders being connected to a single shaft, with cranks set at right angles, to avoid stopping on centres. Steam is permitted to pass to, and the exhaust to pass from the cylinders through a single valve, which is arranged to reverse the current or check the flow of steam by a simple movement or change in the position of same. The same movement which shuts off the steam from the cylinders, also closes the exhaust orifice, and renders further motion in the engine impossible. By this means the car is always under control, both in the upward and downward movement, so long as the gearing and connections remain intact The orifices in reversing valve communicating to and from cylinders, when the car is making the downward trip, are graduated to suit the changed relation and action of the loading, and any excessively rapid motion is thus prevented.

Combined with the engine and hoisting gear is a brake P, which is arranged to be brought into or released from action simultaneously with the stopping or starting of the engine, causing no unnecessary friction while the machine is running, but holding the entire apparatus immovably when it is required to stand at any point to receive or discharge loading or passengers.

The engines are designed to run from one hundred to three hundred revolutions a minute, giving the car a motion varying from 50 to 150 ft. a minute; the rate of speed being always under the immediate control of the operator in the car.

To prevent the noise as well as to avoid the jar necessarily attending the use of gearing at a rapid rate of speed, motion is communicated from the engines to hoisting gear, at the first remove, by means of a powerful belt L. The second and third combinations required in extending the connection to the large winding drum M, are made

by means of accurate machine-cut gearing, each change in train of gear being effected in duplicate, the teeth in the one being placed opposite the spaces in its counterpart.

The winding drum is of a large diameter, grooved spirally to receive the wire rope and prevent the successive coils from coming in contact.

The peculiar character of the duty required to be performed by the hoisting engine in connection with this system of machinery, renders necessary a given number of revolutions alternately in either direction, and the impossibility of a greater number of revolutions of the winding drum than are required to allow the car to reach the extremes of its run. To provide for this, a simple mechanical device called the stop-motion is placed at N; by its means the engine is readily limited to the required number of revolutions in either direction; having accomplished which, steam is shut off, the brake applied automatically, and the engine cannot be again started except in the opposite direction.

The car is substantially built of hard wood and wrought iron—designed to combine the greatest possible strength with the least weight of material. The running gear, by which the car is securely kept in place, and guided in passing through the hatchways, consists of a system of rubber-faced wheels E, acting upon planed iron guides D, which extend from the lowest to the highest points of the hatchway on its two opposite sides or corners.

By the employment for this purpose of wheels having peripheries of hard rubber, properly supported by iron flanges, security against displacement is obtained, while there is sufficient elasticity to compensate for any slight variation in the relative positions of the guides, and ensure a bearing at all points, and freedom from any rattle or irregularity of motion.

The safety appliances in connection with the car consist of heavy iron pawls, Fig. 4930, combined with powerful steel springs, and suitable mechanism for forcing the pawls into contact with the safety ratchets, in case of parting of the lifting rope.

4930.

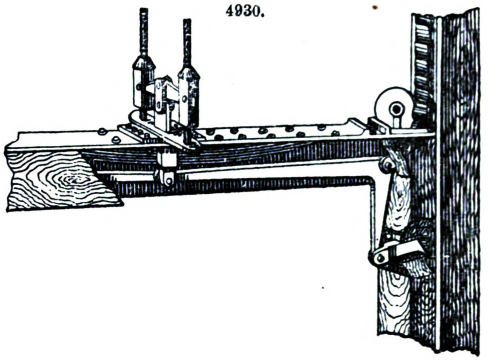

These safety attachments are applied in duplicate; each set being independent of the other, and capable of sustaining the entire weight of the car and loading.

The safety ratchets D, Fig. 4927, which, in connection with the safety fixtures attached to the car, form a very important dependence in case of accident or derangement to the lifting ropes or other working parts of the machine, are in effect a mechanical device for reducing to three inches the distance which it is possible for the car at any time to fall, in case of breakage of the lifting ropes, a practical following up of the ground floor three inches below the car.

These safety ratchets are of iron, very heavy, and having the strongest possible form. The lower ends have a firm bearing at the ground, and the two lines are extended perpendicularly to the highest point to which the car is to rise. The formation of the safety ratchets is such as to present a series of hook-shaped cogs to the pawls K, attached to the car. These cogs and the pawls which act upon them, have a peculiar conformation which ensures a locking together of the two immediately following the slightest contact at the points, and also renders a separation impossible except through the instrumentality of the lifting rope, when properly connected and in order for work.

The safety drum O is an auxiliary safety device, designed to guard against a class of accidents generally resulting from some derangement in the machinery, or obstruction in the hatchway, causing the ropes to be uncoiled from the main winding drum of the engine, while the car remains temporarily lodged at a greater or less distance from the bottom. It is also a safeguard against a rapid descent of the car, in case of the gradual or sudden giving way of the belt, or any part of the gearing connected with the engine; and will prevent a too rapid running of the machine.

Accidents resulting from any of the above-mentioned causes cannot be guarded against or prevented by a simple multiplication of the lifting ropes, or by any of the usual appliances for preventing mishaps. The safety ratchets and pawls are perfectly reliable in case there is a sudden and perfect separation of the lifting ropes at any point in the hatchway, directly over the car, and between the car and the roof or sheave-wheels over which the ropes turn in descending to the main drum of the engine. So soon, however, as the ropes have turned these sheaves, their weight and the friction caused by them serve to retard the movements of the springs I, and counteract their effort to force the pawls into contact with the ratchets. Hence to increase the number and weight of the lifting ropes but adds to the danger, in case of accident to the ropes at any point excepting between the car and the roof. Any breakage of the gearing or other part of the hoisting engine, or of the ropes at a point near the engine, would therefore result in a letting down of the car, unless prevented by some additional safety appliances.

The safety drum takes the place of the ordinary sheave-wheels, and acts as the medium through which motion is communicated from the engine to the car. All ropes connecting from the engine to the car are arranged to act upon this drum, in such a manner that any derangement in their bearing or change in their action, or increase of their motion beyond that prescribed as the regular working rate, will immediately bring into action the two powerful brakes R R, and thus instantly stop the entire apparatus.

The sheave S, around which one of the main lifting ropes passes in leading from the engine to the car, has its bearings in the sliding frame T, which is connected by means of the chain U to the weight on the brake-lever V. So long as the weight of the car is supported by the rope W, the

sheave will be depressed, the brake-lever raised, and the brake kept free from the large friction-wheel X. But if by any means the weight of the car should be taken from this rope, the sheave would be drawn up by the gravity of the weight V, and the brake R be immediately brought into action, stopping and securely holding the drum and effectually preventing any further motion so long as the rope remains slackened. At the same time, the safety pawls in the car, with which this rope connects, would be forced into contact with the ratchets by the spring I, and the car would thus be doubly secured against falling. The rope V connects from one set of the safety fixtures in the car directly to the safety drum, and is firmly secured to it. This rope is successively coiled on to and uncoiled from the safety drum, as the car ascends and descends, by the action of the car and the weight Z; the weight also acting as a partial counterpoise to the car. The brake R on the opposite end of the drum is arranged very similarly to the one first described, but is only brought to bear upon the wheel by the action of the governor *a*. So long as the speed of the drum and car does not exceed the prescribed limit, this brake is kept free from the wheel by a simple mechanism connected with the governor; but is immediately thrown into action by the governor when the speed from any cause reaches a rate at which it is designed that the machine should not be run. The apparatus is controlled by a small endless wire rope passing through the car.

4931.

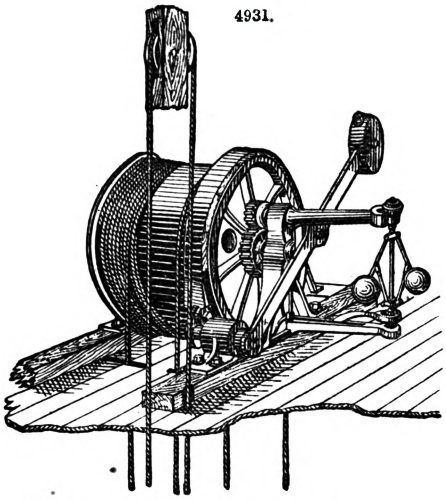

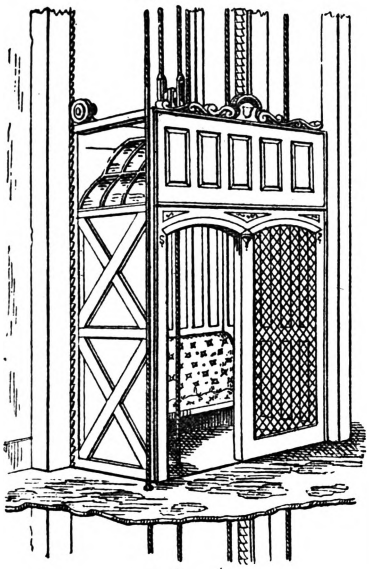

Fig. 4931 is of Otis Brothers' Metropolitan Elevator. This lift comprises a double-cylinder and reversible steam-engine. Figs. 4932, 4933, a winding drum immediately connected with the engine; a safety drum, Fig. 4934, placed over the hatchway, guide posts at each side, or two corners of the hatchway from cellar to roof, faced with the lock ratchets, between which the platform is raised and lowered by a wire lifting rope, suspending it from the safety drum, which another wire lifting rope connects with the winding drum at the engine. The platform is moved from 60 to 200 ft. a minute at will of operator, and wherever it is stopped it is immovably held by a powerful brake combined with the engine and winding drum. This brake is so arranged as to be brought into and released from action simultaneously with the stopping and starting of the engine, but causing no friction while the lift is running. This lift differs but little, except in arrangement, from the one just described.

Fig. 4934A is of a winding drum for lifting, made by William Sellers and Co., Philadelphia. The drum is arranged either for a wire rope or a chain. When a wire rope is used the surface can be covered with leather to prevent abrasion. This drum is driven by a tangent-wheel and worm enclosed in a casing, where they are submerged in oil, the oil being retained by packing glands on the worm-shaft. The whole is driven by pulleys, the motion being reversed as in a planing machine, by shifting the belts. See MACHINE TOOLS.

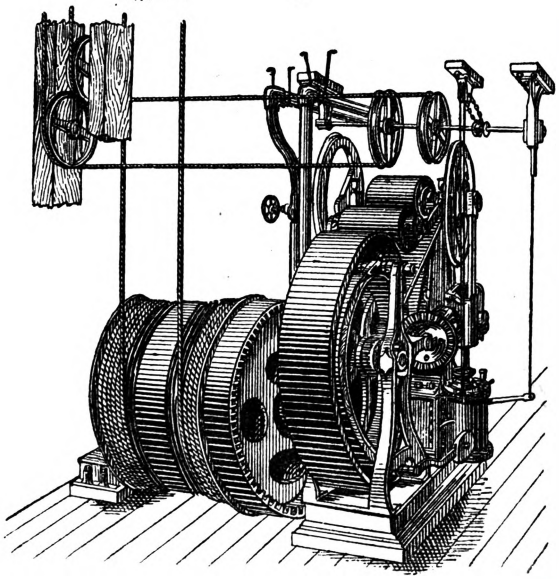

The gearing for shifting, seen on top, is the same as used on the "Sellers Planing Machine," and is so arranged that one belt is removed from the central or fast pulley before the other belt is thrown on. The shifting drums are operated by hand, either by cords or a vertical rod that is partially rotated or moved up and down as the nature of the case may render most convenient. The vertical shafts on the front

are operated by a tangent-wheel in the casing, which serves as a guard to shift the belt at the extremes of the run of the cage or platform suspended on the drum. The small quadrant seen in front is to move a cord or chain by which the hand movement of the shifting gearing is effected.

Fig. 4935 is a view of another of William Sellers and Co.'s winding drums, driven by a train of spur-gearing. The friction pad is operated by the shifting gearing, and stops the movement instantly, after the belts are shifted, by pressing on the fast pulley in the centre; the shifting devices are on the front, and show the form of the pivoted shifters that produce the differential movement before referred to.

4932.

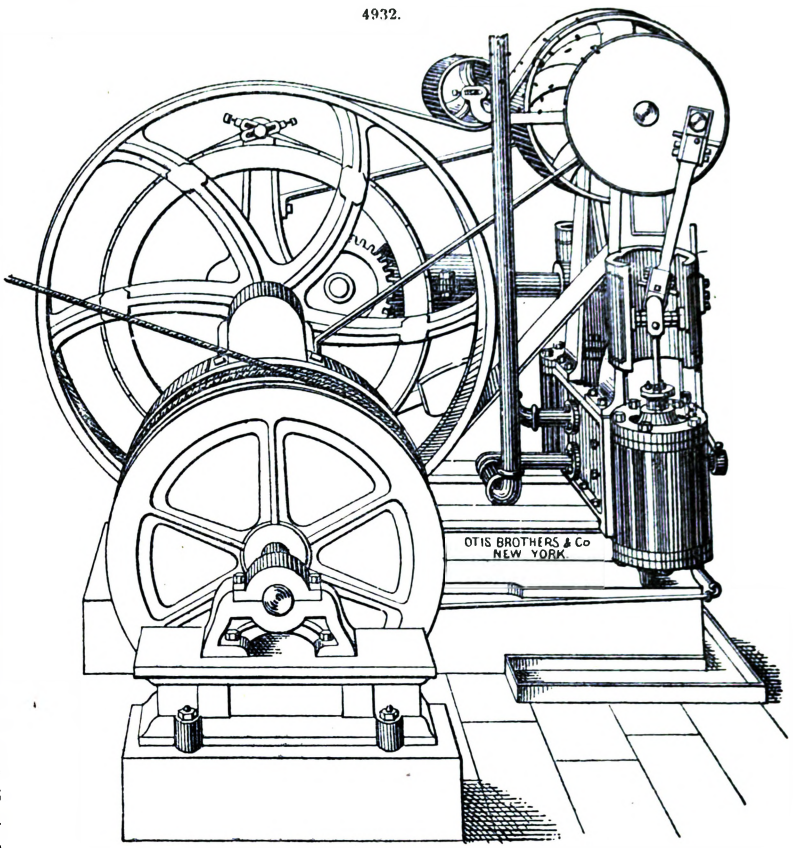

In the mines of Colorado the lifting arrangement consists of a bucket which is raised or lowered by a winding apparatus driven by belting. This contrivance, Figs. 4936, 4937, is very simple, and, though not well adapted to deep shafts or heavy work, it answers its purpose very well in shallow mines. The drum, or spool *a*, on which the rope is wound, is placed near the mine-shaft, so that the rope passes from it over a pulley *b*,

4933.

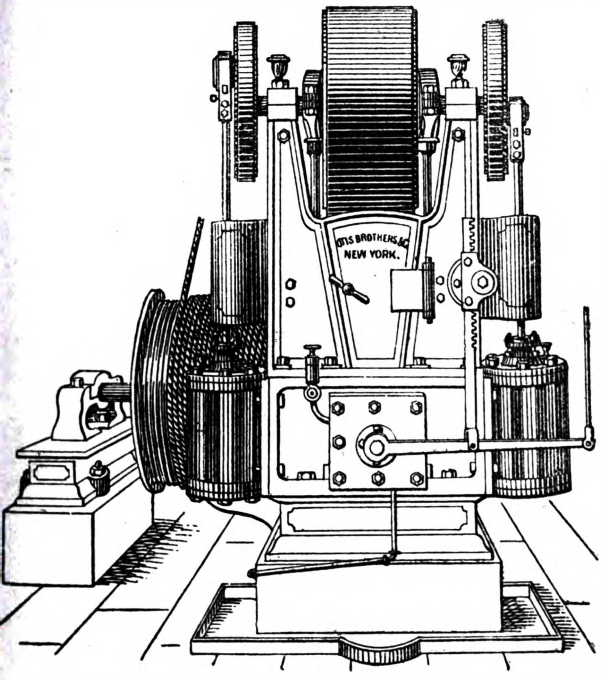

4934.

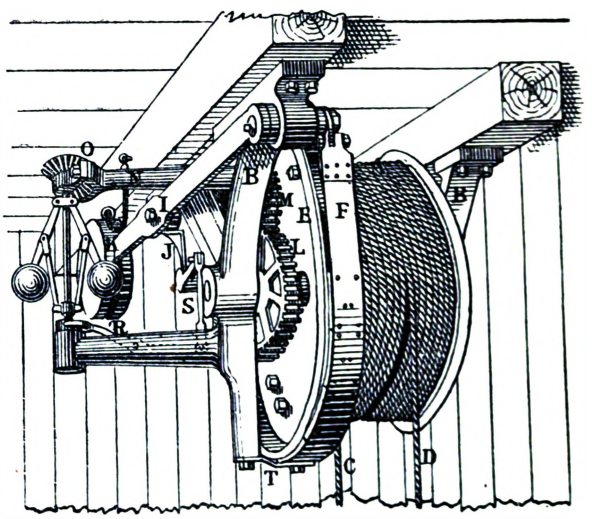

and thence down the shaft. This spool, 4 ft. in diameter, is fixed on an iron shaft *c*, having at one end a pulley *d*, of somewhat larger diameter, and at the other end a brake-rim *e*. Motion is communicated to the pulley *d* by means of a driving pulley directly beneath it, and an

8-in. belt *g*. This belt is slack, and imparts no motion to the spool unless the tightener *h* is applied to the belt by means of the lever *j*, which is done by the attendant standing at the mouth of the shaft, whenever it is desired to lift a bucket from the mine. On withdrawing the tightener, the spool is held firmly, or its reverse motion is controlled by means of a brake, a 4½-in. iron band, encircling the spool at the rim *e*, and applied by the lever *i*. The pulley driving the belt *g* is on the same shaft with, and concealed from view by, the pulley *k*; to this motion is communicated by the belt *l*, and the pulley *m*, which receives its power directly from the engine. The pulley *m* drives a long shaft *n*, extending from the building in which the machinery is enclosed to the other shaft-houses of the mine, where winding of similar character is set in motion in the same manner. Power is sometimes transmitted in this way a distance of several hundred feet, from an engine to a remote shaft-house.

4934A

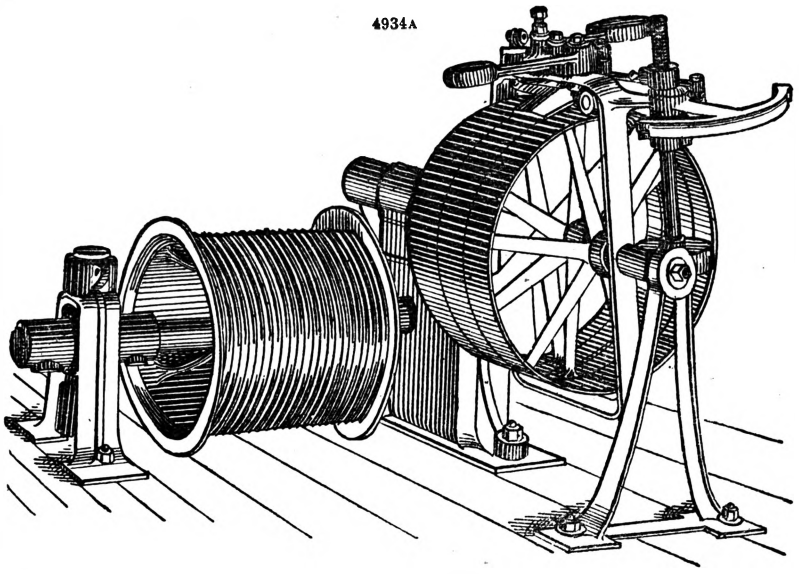

4935.

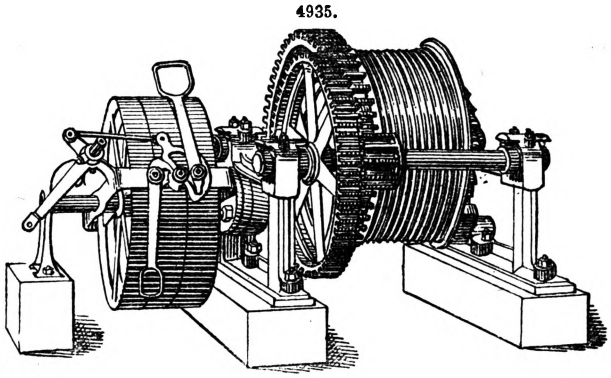

At the Comstock Mines, in Nevada, the winding reels or drums are operated either by cog or friction gearing. The latter was much used a few years ago, but as the depth of the mines has increased it has been abandoned by some, and replaced by cog-gearing, which is thought safer and more effective for deep works.

4936.

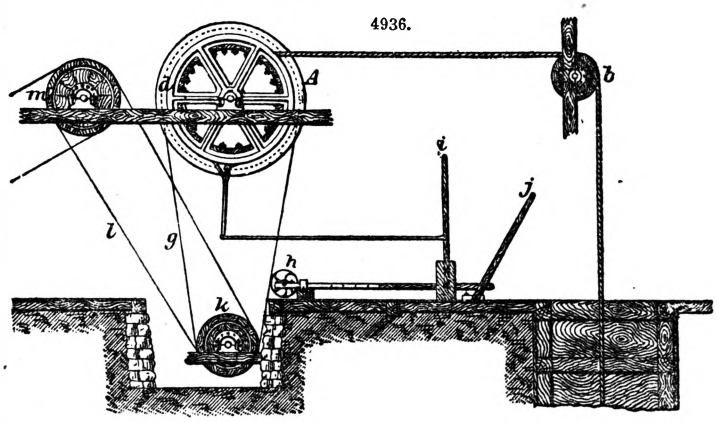

The kind of friction-gear formerly in general use is that known as the V-wheel and pinion; the construction of which is shown in detail in Fig. 4938. The face of the wheel, usually about 8 or 10 in. wide, is formed with V-shaped grooves, two or three in number, which extend, continuously, entirely around the periphery; the face of the pinion is of corresponding form, but it is so placed with regard to the wheel that the projecting ribs between the grooves fit into the recesses in the face of the wheel. The pinion is keyed to the engine-shaft, and may be set in revolution by it. The wheel, being so placed that its face may be brought into contact with the face of the pinion, is caused to revolve by friction if the two surfaces of wheel and pinion are forcibly pressed together. The friction-wheel forms one end of, or is

4937.

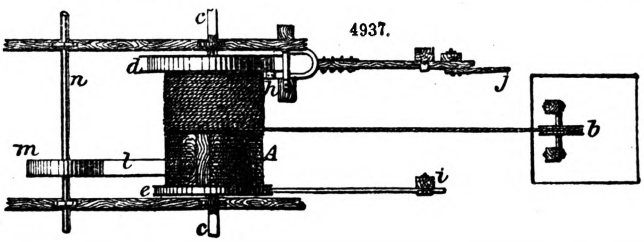

attached to the drum on which the rope or cable is bound. In Fig. 4938 the wheel W is cast in one piece, and the drum or spool consists of two flanges F F, which are connected together by plates of iron, bolted as shown in the figure. The spool is joined to the friction-wheel by bolts *b b*, passing through the flange F. To the opposite flange F is bolted a broad rim R, to which is applied a brake-strap. This strap is usually a band of iron, 4 or 5 in. wide, which encircles the rim R of the spool, and may be made to grasp it tightly, thus arresting the movement. There are various methods of applying the brake to the rim; one of them is shown in Fig. 4939. L is a long lever, broken off in the drawing.

The general method of arrangement of machinery of this kind is illustrated in Figs. 4940, 4941. In this case there are two drums, each of which is independent of the other. The friction-pinions P are keyed to the engine-shaft S, and are caused to revolve by it. Each friction-wheel W forms a part of a winding drum D, which is supported by pillow-blocks B, that may slide backward and forward on the bed-plate beneath them. They move horizontally between guides and flanges, which prevent any upward motion. The sliding movement is imparted to the pillow-blocks by means of the arms *a*, connecting them with a short lever at *b*, which is keyed to a rock-shaft *c*. If this rock-shaft is slightly turned towards the drum, the arms are advanced, and the friction-wheel brought into contact with the pinion. If it is turned from the drum, the wheel is removed from such contact, and may be held by a brake. The desired motion is given to the rock-shaft *c* by the short lever *l*, and the long arm L, which is at the hand of the attendant. On the opposite end of each drum is a rim R for the brake-strap. The brake is controlled by the short lever *f*, and the arm F, which, like the arm L, is within easy reach of the operator.

This method of operation has some advantages in the simplicity with which the machinery is controlled, and economy in the labour employed. The engine runs steadily in one direction, and, not having to be reversed, requires but little attention. It may also be applied to other continuous work, such as pumping, the driving of air-blowers or other machinery which cannot be done when the engine is stopped and reversed at short intervals.

A disadvantage of this method is, that with very heavy loads the wheels are liable to slip against each other; and another, that it is not readily practicable to lower a loaded cage into the mine under control of steam, making it therefore necessary to depend entirely on the brake for that purpose. This is particularly objectionable in deep mines, where the weight of the long cable is itself very considerable.

Fig. 4942 is a plan of another arrangement of lifting apparatus, used in Nevada. In this case two reels R R are each keyed to a separate reel-shaft with a spur-wheel W and brake-rim B. The reels are entirely independent of

4943.

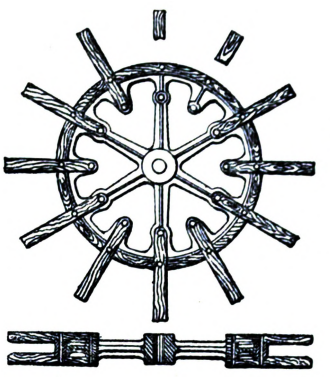

4938.

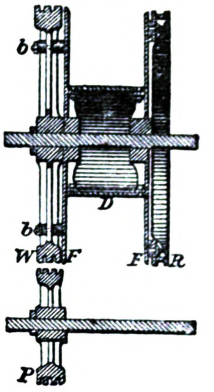

4944.

4945.

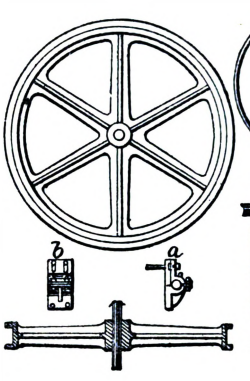

4939.

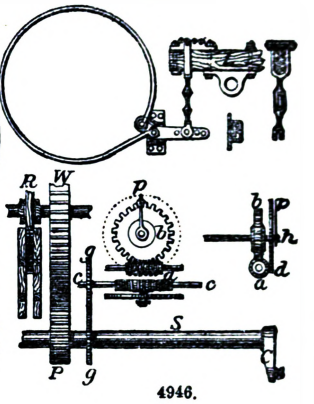

4946.

4940.

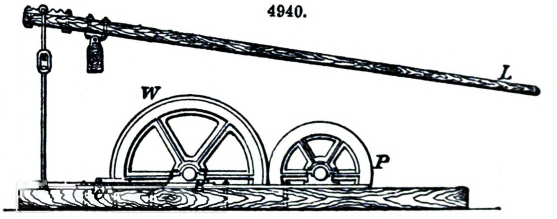

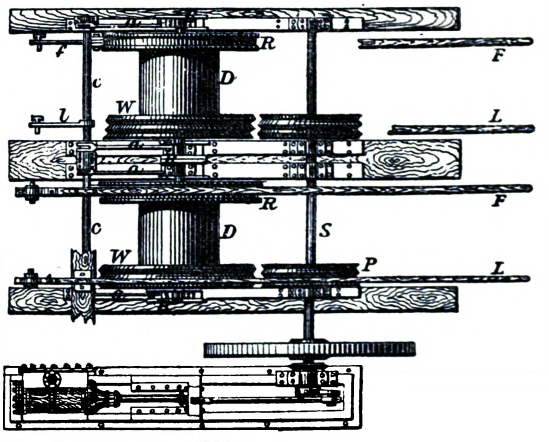

4941.

each other. There are two pinions P P, one for each reel on the engine-shaft S. These pinions are not keyed to the engine-shaft, but turn freely in either direction, independently of the motion of the shaft. They may be made to revolve with the shaft by the clutches C, which being fixed to the shaft by a feather may slide toward or from the pinions. If the clutch C is moved into gear with the pinion P, the latter receives the motion of the engine-shaft, and transmits it to the reel. If the clutch be withdrawn from its contact with the pinion, the reel may turn in the opposite direction, while the motion of the engine remains uninterrupted. The reel may therefore be moved by the engine for lifting, and when reversed for lowering may be controlled by the brake. The clutches are moved in and out of gear by the levers L L, and the brakes applied by similar levers I I. If it is desired to lower a cage under control of steam, as is usually the case when men are descending, it is only necessary to leave the clutch in gear, and reverse the engine. It will be seen that both reels may lift at the same time; or, by fixing both clutches permanently in gear, and reversing the engine for each operation, one reel may lift while the other lowers, using the descending cage as a counterweight for the ascending one. By this arrangement the single engine E may not only do the lifting, but also drive the pumps. The engine-shaft extends beyond the reels, and if the wheel H is moved into gear with the pinion J of the pump-wheel, K may set that in motion. The pumping engine F is commonly used for this purpose, but in case of necessity its work may be done by the hoisting engine E. Lifting may also be performed by the pumping engine, if the wheel H is put in gear with the pinion J. Thus, if desired, either engine may serve as a substitute for the other.

4942.

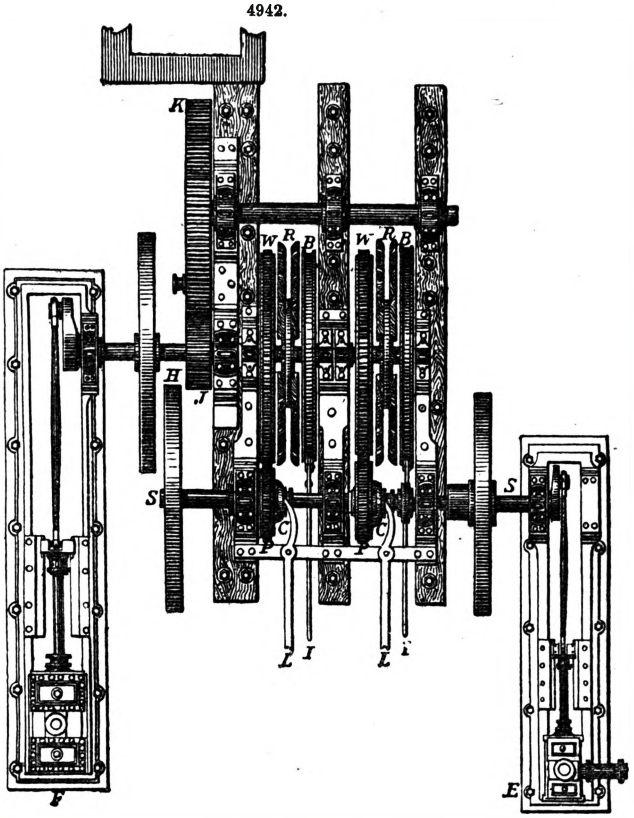

The cables commonly employed in the lifting works of the Comstock Mines are either flat ropes, of steel or iron wire, or heavy round hemp ropes. Chain is used very rarely, if at all. Flat ropes are generally preferred, especially for great depths, because they possess greater strength in proportion to their size, winding themselves compactly upon a reel, and withstanding better than the hemp the wear and tear of the work. They are usually from 3½ to 5 in. wide, and vary in thickness according to the character of the material of which they are made. If of iron wire, they are from ½ in. to ¾ in. thick; if of steel, they are usually ⅜ in. in thickness. The latter is preferred, on account of its lighter weight, less bulk—an important consideration when the space allowed for winding reels is limited—and greater strength. Flat ropes are wound on narrow reels, the width of which is but very little greater than that of the rope. The latter therefore winds upon itself at each revolution of the reel. Figs. 4943, 4944, are a common form of the reel used. It is a central wheel of cast iron, 6 or 8 ft. in diameter, to which are bolted a number of wooden arms, making the total diameter about 12 ft. They are sometimes cast with a rim, for the application of a brake. For hemp ropes, spools or drums are used, one form of which, combined with a friction-wheel, is shown in Fig. 4938.

The rope or cable passes from the reel or spool over a sheave, which is supported directly above the hoisting shaft, and thence downwards into the mine, its end being attached to the cage or bucket.

The sheaves are made of wood or iron, and of various dimensions. Those of large diameter, 8 or 10 ft., are preferred, as they cause less wear to the cable. A sheave of common form is shown in Fig. 4945. It is made of cast iron, and is supported upon pillow-blocks *a b*, in a gallows-frame which is built at the mouth of the shaft, and so placed with reference to it that the rope passing over the sheave may be suspended over the middle of the compartment in which it is employed.

The position of the cage in a shaft, at any part of its ascent or descent, is shown to the operator by an indicator, Fig. 4946, connected with the winding machinery. In Fig. 4946, S is the main engine-shaft, set in motion by the crank C. The pinion P drives the spur-wheel H, by means of which the winding reel R is caused to revolve. The relation of the pinion to the spur-wheel being as 1 is to 3½, the winding reel R makes 100 revolutions for 350 of the engine-shaft. On the latter, near the pinion P, is fixed a light gear-wheel *g*, 2 ft. in diameter, which drives, by means of a similar wheel *g'*, the counter-shaft *c*. This counter-shaft has a worm, shown at *a* in elevation, above which is a worm-wheel *b*, a disc 2 ft. in diameter, the periphery being cut to correspond with the worm *a*, and has 350 threads. As the counter-shaft *c* and worm *a* revolve with the same speed as the engine-shaft, the disc *b* is caused to make one complete revolution by 350 revolutions

of the engine-shaft = 100 revolutions of the winding reel R. The journal supporting the disc projects beyond its face, and is provided at *h* with a pointer *p* revolving with the disc. Between the disc and the pointer a dial *b*, fixed upon an independent support, is interposed. As the disc is revolved, the pointer moves over the face of the dial. As the pointer moves with the disc, its position is always determined by the length of cable paid off from the reel; if its position is once marked on the dial at points corresponding to given depths of the mine-shaft, the engine-driver can readily ascertain the place of the cage.

Cranes.—In common *jib-cranes* the ordinary height of handle above the ground is 3 ft., and the diameter of the circle described by the handle 32 in., while the angle of the jib should be = 45°.

Each man working at the handle of a crane imparts a pressure of about 15 to 20 lbs., and taking W = weight to be raised by crane in lbs., P = power applied to the handle in lbs., D = diameter of circle described by handle in inches, n = number of revolutions of handle to one of barrel, B = diameter of barrel in inches,

$$B = \frac{D \times P \times n}{W}. \qquad n = \frac{W \times B}{D \times P}. \qquad D = \frac{W \times B}{P \times n}. \qquad P = \frac{W \times B}{n \times D}. \qquad W = \frac{P \times D \times n}{B}.$$

To calculate the strains on a crane by construction,

Let A B C represent a crane; A B being the suspension-rods; A C the jib; and B C the crane-post.

Weight, W, is assumed = 10 tons in the figure. With any convenient scale draw the vertical line A D, Fig. 4947, = W = 10 tons, or 10 divisions of the scales.

From D draw D E parallel to the jib until it cuts the line A B produced to E; from E draw the horizontal line E F and produce the line A D to meet it at F. The strains may be measured off by means of the scale as follows;—

Thrust on jib = E D = 19½ tons; strain on the suspension-rods = A E = 12½ tons. The crane-post may be considered as a beam fixed at one end C, and a weight = E F, = 11¼ tons, applied at the other end B.

4947.

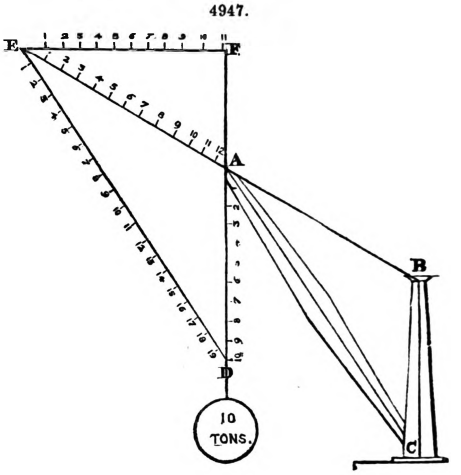

Fig. 4948 is of a jib-crane for shop purposes, made by Wm. B. Bement and Son, Philadelphia. It is used in loading and unloading heavy pieces

4948.

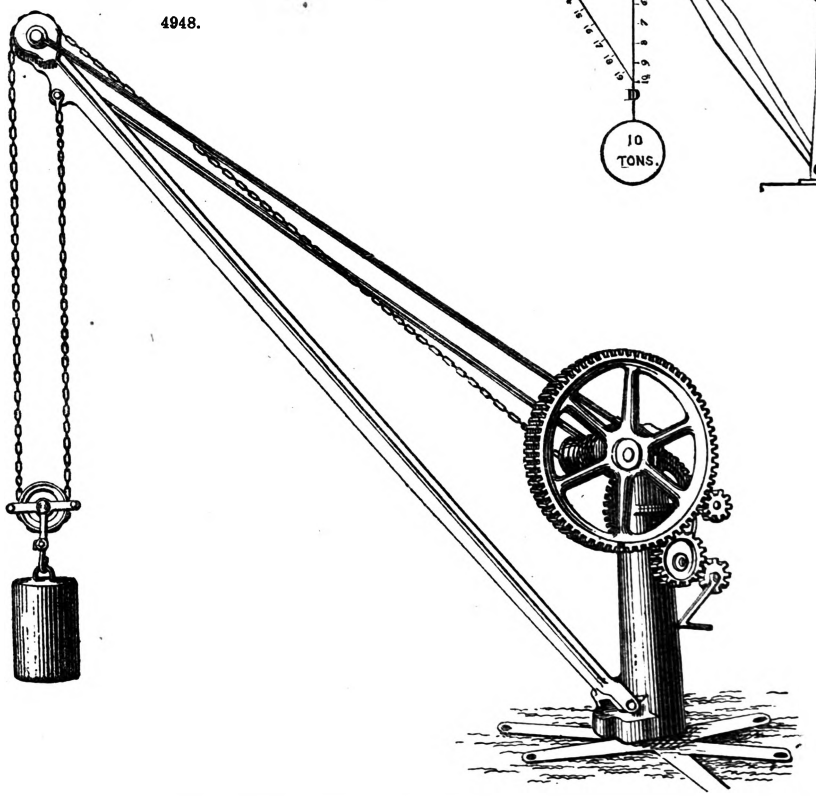

from planers and other tools, or for general lifting work. The machinery, including the jib, is all mounted on a strong metal post revolving on a stud attached to and supported by radial feet which are bolted to the foundation.

The spur-gearing which drives the reel is arranged with changes to suit the weight to be raised, and is driven by a winch.

The casing at the foot of the jib contains two rollers, which bear against the bottom of the supporting stand and prevent excessive friction when conveying a load. The framing, except the braces, is of cast iron throughout.

Tubular Wrought-iron Cranes.—Figs. 4949 to 4953 show the form and details of one of the tubular wrought-iron cranes erected by Sir Wm. Fairbairn at Keyham Docks, Devonport.

Six of these cranes are all of the same size and strength, and were calculated to lift a weight of 12 tons to a height of 30 ft. from the ground. Each of them is intended to sweep a circle of 65 ft. diameter, so that the projection of the jib was 32 ft. 6 in. from the centre of the stem, and the extreme height 30 ft. above the working platform. The cranes are composed of wrought-iron plates riveted together, and so arranged as to give the back or convex side an adequate degree of strength to resist tension, and the front or concave side, which is of the cellular construction, a corresponding power to resist compression. The form tapers from the point of the jib, where it is 2 ft. deep by 18 in. wide, to the level of the ground, where it is 5 ft. deep and 3 ft. 6 in. wide. From this point it again tapers to a depth of 18 ft. below the surface, where it terminates in a cast-iron shoe forming the toe on which the crane revolves. The lower or concave side, which has to resist a force of compression, consists of plates forming three cells and varying in width in the ratio of the strain; and on the other hand, the convex or top side, which has to bear the pull or tension due to the suspended weight, is formed of long plates connected together by a system of chain riveting. The sides are of uniform thickness throughout, the joints being covered with T-iron internally, and on the outside with strips or covering plates $4\frac{1}{2}$ in. wide.

The form of the jib, shown approximately in Fig. 4956, together with the point at which the load is suspended, is probably not the most favourable for resisting pressure. The crane, nevertheless, exhibits great powers of resistance, and may safely be considered as a curved hollow beam having one end immovably fixed, the force being applied at the other. Viewing it in this light, the strength is determined from the formula $w = c\frac{a\,d}{l}$, where w is the breaking weight at the end of the jib in tons; c the ultimate resistance of wrought iron to compression in tons a square inch; a the sectional area of the lower or cellular flange in square inches; d the depth in inches; and l the horizontal length or sweep of the jib in inches; the strength being supposed to be limited by the resistance of the lower or cellular flange to compression. From this formula it is found that it would require a load of 63 tons to break one of these cranes.

In the construction of cranes, whether of wood or iron, it is the usual custom to place the jib in an inclined position at an angle of about 40° or 50° with the stem, as in Figs. 4954, 4955, so as to obtain the greatest strength; in this position the extreme point from which the load is suspended has to be stayed or held in its place by oblique or horizontal tie-rods. With this arrangement it will be observed that, if the article to be raised is at all bulky, such as a large bale of merchandise or a marine boiler, it will be prevented from being elevated to the top of the crane by coming in contact with the diagonal stay or jib. Hence with ordinary cranes a considerable part of the height is practically unavailable. In the wrought-iron crane, however, Fig. 4956, this defect is obviated, since the curvature of the jib is sufficient to allow the article to be raised to the highest point to which the chain ascends.

Fig. 4949 is a sectional elevation of a 60-ton crane, showing the general arrangement and the well in which the crane is placed; and Fig. 4950 is a plan. Fig. 4951 is an enlarged vertical section of the lower portion of the crane.

Figs. 4952, 4953, are sectional plans of the crane at the level of the ground, and at the chain-barrel and gearing.

The crane consists of a rectangular wrought-iron tube A A, curved to a radius of about 46 ft., and tapering uniformly from 9 ft. deep by 5 ft. 6 in. wide at the level of the ground, where from the leverage of the crane the strain is the greatest, to 3 ft. 6 in. deep by 2 ft. wide at the point of the jib. From the level of the platform it is also tapered downwards to about 1 ft. 8 in. square at 23 ft. below the level of the ground, where it fits into a cast-iron shoe B working in a socket or step on which the crane revolves. The point of the jib is 60 ft. above the level of the platform, and sweeps a circle of 53 ft. radius; so that it will lift the heaviest load perpendicularly from a mean distance of 37 ft. from the quay wall, and to a height of no less than 85 ft. above low-water mark, and land it at 69 ft. from the edge of the quay.

The crane itself is built on precisely the same principle as a tubular bridge, and may indeed be considered as a curved tubular girder inverted, the top side being the front or concave side of the crane, and the bottom side forming the convex or back part of the structure. Hence it may be described as composed of back plates, side plates, and cell-plates.

The back plates C, Figs. 4952, 4953, which, corresponding with the bottom plates of a tubular girder, have to resist a strain of tension, are made as long as possible to avoid joints, and are carefully chain riveted. They are $\frac{3}{8}$ in. thick and each half the width of the crane; and taking those on one side and beginning at the bottom of the well, the first back plate is 13 ft. 9 in. long; the second, which passes the point where the downward taper ends and the upward begins, is 13 ft. 6 in. long; the next is 12 ft. 6 in., followed by six others, each 12 ft. long, and these again terminated by a plate 15 ft. long which curves round over the pulley at the extreme point of the jib. These plates are covered externally by a long strip 8 in. broad and $\frac{3}{8}$ in. thick, extending the entire length of the crane and covering the longitudinal joint between the back plates. The cross-joints are placed alternately, and at each side of the crane there is a line of angle-iron connecting the back plates C with the side plates D, Figs. 4952, 4953. So that the sectional area of the back of the crane subjected to tension is, at the bottom 10·50 sq. in., at the platform 27·75 sq. in., at the point of the jib 12·00 sq. in.

The sides of the girder are formed of plates 3 ft. broad at the outer edge or back of the crane,

riveted together with T-iron 4 × 2 × $\frac{3}{8}$ in. at every joint inside, and a strip outside, to give the necessary rigidity. Beginning at the toe, the first three plates are $\frac{3}{8}$ in. thick; the next three $\frac{5}{16}$ in.;

4949.

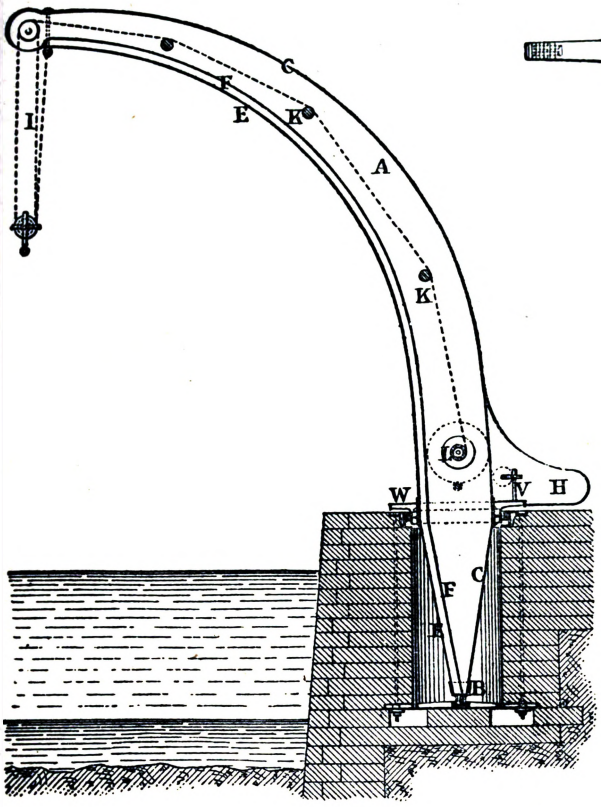

4950.

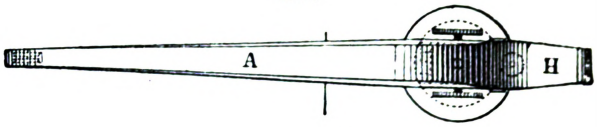

4951.

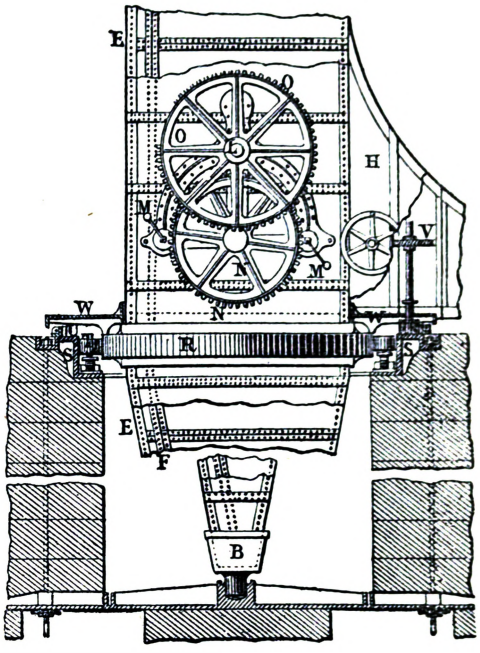

4952.

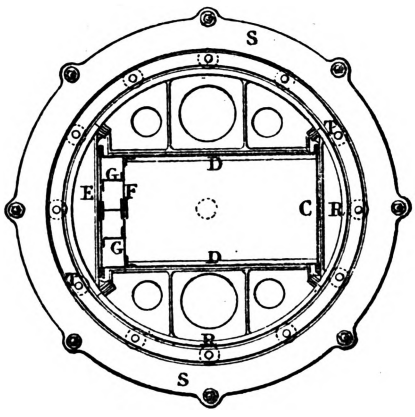

4953.

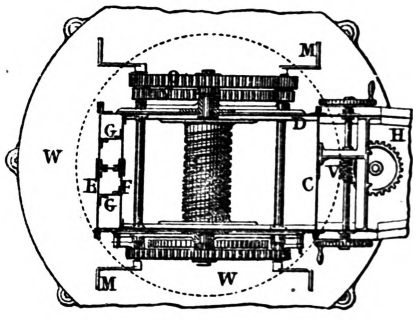

4954.

4955.

4956.

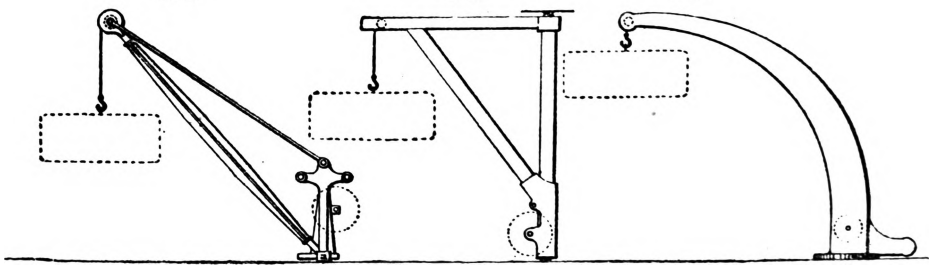

the next five, which have to resist the horizontal thrust against the cast-iron circle at the top edge of the well, $\frac{3}{8}$ in. thick; and the remainder $\frac{5}{16}$ in. thick.

The front of the crane is constructed with four cells, to resist the great strain of compression to which that part is subjected. The construction is shown in the sectional elevations, Figs. 4949 and 4951, and the transverse sections, Figs. 4952, 4953. The two series of plates E and F, which form the front and back of the cells, are composed of plates varying from 5 ft. to 7 ft. 6 in. long, and $\frac{5}{16}$ in. thick. Each of these plates is riveted by two angle-irons to the side plates D of the crane, the front plates E projecting beyond the side plates D, and the intermediate plates F being placed within the tube thus formed at a distance of 12 in. from the front plates E, so as to divide the tube into two. The narrow space between the plates E and F is further subdivided into four cells by three vertical plates G, parallel to the side plates D. Eight angle-irons connect the plates G with the plates E and F, and further strengthen the structure thus formed. The reason of this arrangement is that wrought-iron plates from their flexibility offer but a small resistance to compression in the direction of their thickness, as they bend or buckle with a comparatively small force. The five vertical plates, however, which form the sides of the cells, are placed in the position in which they offer a maximum resistance to compression, namely, with their width or depth in the direction of the strain; and the angle-irons and the plates E and F serve to keep them in position and give great rigidity to the structure. The centre plate G of the cells is $\frac{5}{16}$ in. thick, and the two remaining plates each $\frac{4}{16}$ in. thick. The sectional area of the concave or front part of the crane subjected to compression is therefore at the platform 62·58 sq. in., at the point of the jib 3483 sq. in.

Attached to the back of the crane is a tail-piece H or box of wrought iron, containing cast-iron weights acting as a counterpoise to the jib. The chain I is attached to the crane by a bolt and nut at the point of the jib, and passes round four pulleys, two movable and two fixed in the end of the jib; it is then conducted down in the interior of the jib over three rollers K to the barrel L, which is also in the tube near the ground. On each side of the crane a strong cast-iron frame is fixed for receiving the axles of the spur-wheels and pinions. Four men, each working a winch M of 18 in. radius, act by two 6-in. pinions upon a wheel N, 5 ft. $3\frac{3}{4}$ in. diameter; this moves the spur-wheel O, 6 ft. 8 in. diameter, by means of an 8-in. pinion, and on the axle of the former the chain-barrel L, 2 ft. in diameter, is fixed. Hence the advantage gained by the gearing will be

$$\frac{W}{P} = \frac{18 \times 63{\cdot}75 \times 80}{6 \times 8 \times 12} = 158;$$

or, taking the number of cogs in each wheel,

$$\frac{W}{P} = \frac{18 \times 95 \times 100}{12 \times 9 \times 10} = 158;$$

and as this result is quadrupled by the fixed and movable pulleys, the power of the men applied to the handles is multiplied 632 times by the gearing and blocks. A brake-wheel, Fig. 4953, 5 ft. 2 in. diameter, is fixed on the other end of the spindle of the spur-wheel N; and the power applied at its circumference is accordingly multiplied about 100 times by the gearing and blocks.

At the level of the ground the crane is firmly fixed in a strong cast-iron frame R, Figs. 4951, 4952, the outer edge of which is a circle of 11 ft. 3 in. diameter; and on the edge of the well a similar ring S is imbedded in the masonry and secured by long holding-down bolts, leaving a space of 10 in. all round between it and the inner ring R. In this space a number of strong cast-iron rollers T are placed, 10 in. in diameter, to prevent friction and facilitate the movement of the crane as it revolves round its axis. Upon the cast-iron ring S on the quay wall is fixed a circular rack U, composed of cogged segments bolted together, into the teeth of which a small pinion works, whereby the

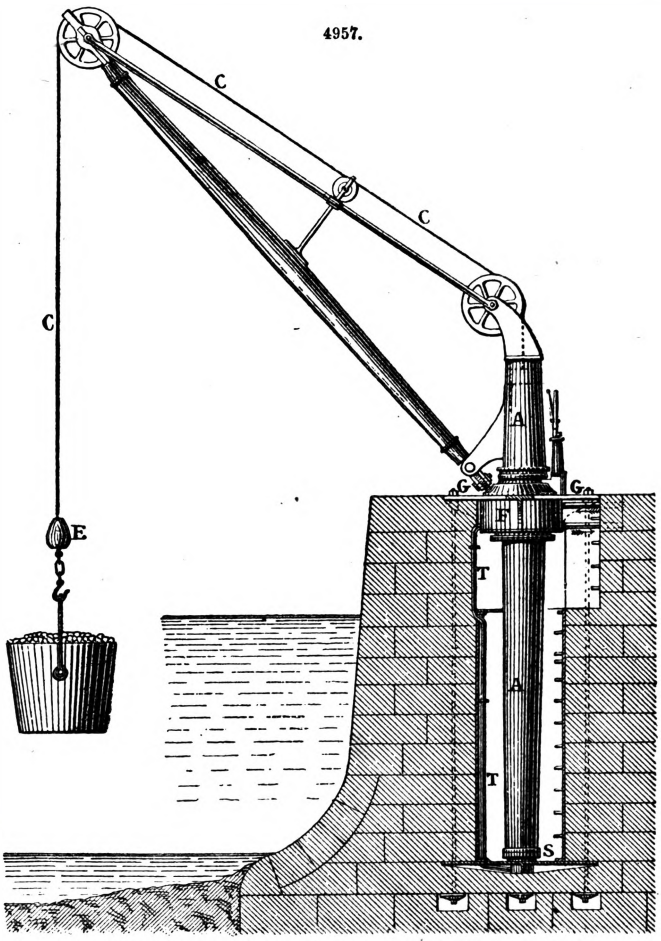

crane is made to revolve. This pinion is worked by a worm and wheel V placed in the counterpoise box H; and two men are sufficient to move round the crane with 60 tons suspended from the extreme point of the jib. In working the crane the men stand upon a cast-iron platform W attached to it a few inches above the level of the ground.

Fig. 4957 is an elevation of a very ingenious direct-acting steam-crane, designed by Robert Morrison, of Newcastle-on-Tyne, in which the steam-cylinders, gearing, and other complications of the ordinary steam-crane, are done away with; and the crane-post is made the steam-cylinder, fitted with a piston having a flexible piston-rod of wire rope, which works steam-tight through a stuffing box at the top and passes over two pulleys, forming itself the chain for lifting the load.

Fig. 4957 is a side elevation of a 2½-ton Morrison crane; Fig. 4958 a vertical section of the crane-post to a larger scale; and Fig. 4959 a sectional plan.

4958.

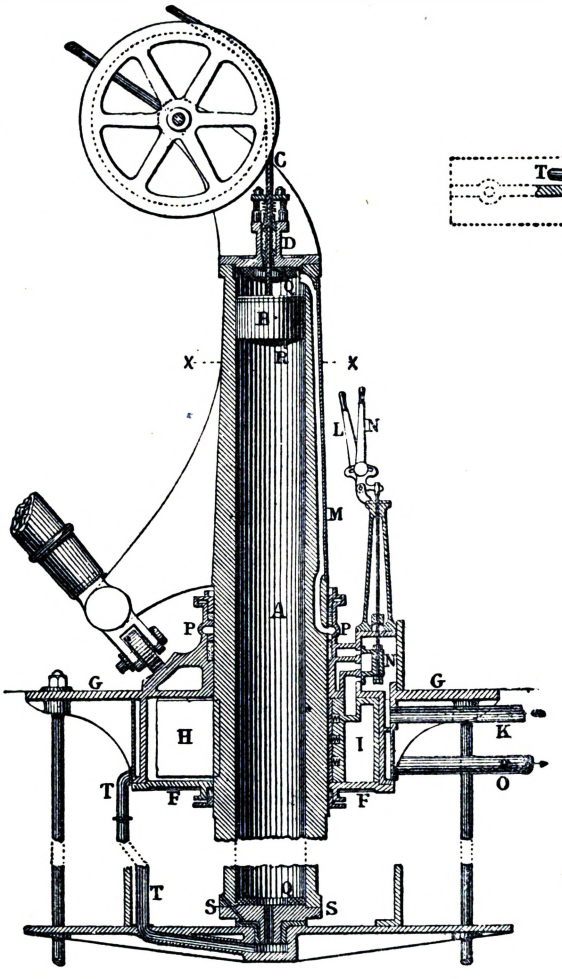

4959.

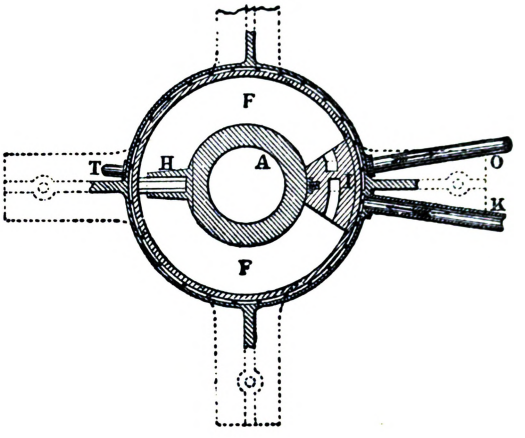

4960.

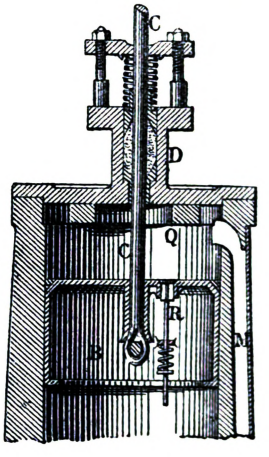

The crane-post or cylinder A of cast or malleable iron is made in one length, or in two or more pieces bolted together as may be convenient, and bored out to a size suitable for the weight to be lifted and the pressure of steam to be used. The length of the bored portion of the crane-post corresponds with the height of lift required. Within the cylinder works the piston B, which is firmly secured to the end of the flexible piston-rod or wire rope C. This piston is made with a wedge-shaped packing ring, as shown in the enlarged section, Fig. 4960, so that when the pressure of steam is upon it the packing expands and makes it steam-tight; but as soon as the pressure is removed the packing contracts, so that the piston works freely in the cylinder and the weight of the rope is sufficient to overhaul it. The wire rope C works steam-tight through a stuffing box D at the top of the crane-post, and passes over the two pulleys, one on the top of the crane-post and the other at the extremity of the jib. At the end of the rope is fixed the cast-iron ball E, containing a volute spring to which the hook is attached for the purpose of relieving the crane and rope from any abrupt strain when beginning to lift the weight. The wire rope is much safer than a chain, since it is not liable to the sudden fracture often occurring in crane chains, nor is it affected to the same degree by the temperature of the atmosphere. The stuffing box D through which the wire rope works is fitted with a conical gland, pressed down by a spiral spring, so that the packing is always kept well pressed up round the wire rope, without the necessity of screwing up, as is the

case with ordinary stuffing boxes. The turning-round cylinder F, Figs. 4958, 4959, for swinging the crane round, is cast on the under side of the bed-plate G and forms part of it; it is truly bored and fitted with a rectangular metal-packed disc or radial piston H secured to the outside of the crane-post A. A segmental block I forming the abutment is bolted to the inside of the cylinder F, and made steam-tight next the crane-post by metallic packing and springs.

In working the crane, the steam is admitted from the steam-pipe K through the lifting valve L, Fig. 4970, by means of the handle, Fig. 4961, and passes up through the port M in the crane-post A, Figs. 4958, 4962, to the top of the post, where it presses on the lifting piston B and raises the load. The valve L is then closed, and the steam retained in the cylinder A, so as to hold the weight suspended; while the crane is swung round right or left by admitting steam through the turning valve N to either side of the turning piston H. The handle L is then reversed and the steam above the piston B allowed to escape through the exhaust-pipe O, and the weight is lowered to the required position fast or slow as desired. There is a passage round the stuffing box P for the purpose of admitting the steam into the port M at any position of the crane; this passage is packed at top and bottom with a lantern brass between, so that the top gland tightens both packings at the same time. It was apprehended at first that on account of the expansive action of the steam there would be some difficulty in starting and stopping the crane instantaneously, but no such difficulty exists in practice. The lifting valve L, shown enlarged in Figs. 4963, 4964, is made with oblique edges, so that the lifting can begin gradually and stop instantly. The turning-round valve N is also made in the same way; and for stopping the crane suddenly when turning round it is only requisite to admit the steam to the opposite side of the turning piston H; this not only stops the crane at once, but also forms a cushion for the piston. Provision is further made at each end of the lifting cylinder A, as well as in the turning-round cylinder F, for preventing accident in case the steam should not be shut off at the proper time, by placing a ring of india-rubber Q, Fig. 4958, to form a cushion for the piston at each end of the cylinder, so that no damage can be done.

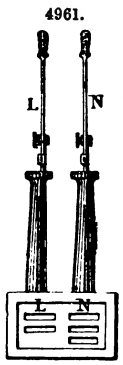

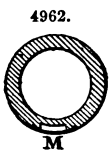

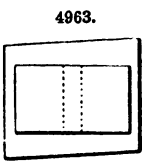

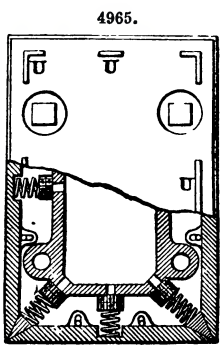

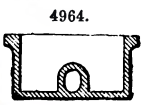

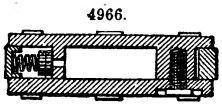

The turning-round cylinder F is cased and constantly surrounded with the exhausted steam, as in Figs. 4958, 4959; this keeps it hot and prevents condensation. The crane-post A may be covered with felt and wood to keep it warm. It might be supposed that in working the crane the steam would condense so rapidly in the crane-post that no weight could be held suspended steadily for any length of time; but in practice no perceptible change is observed in the position of the weight if left suspended for twenty minutes without any steam being admitted into the crane-post; there is indeed no perceptible condensation of steam, and no more power is required to lift 2 tons than a pressure of 2 tons upon the area of the piston, with the usual allowance for friction. The crane is blown through at starting in order to clear it of any water that may have condensed in it, and is thus heated so that it is not found requisite to blow through a second time as long as it continues at work. The blowing through is effected by means of the small mitre-valve R placed in the piston B, Fig. 4960, kept closed by a spiral spring; but when the piston comes to the bottom of the crane-post the valve is opened and allows the steam to pass through the hollow step S of the crane, Fig. 4958, blowing out any water through the pipe T; the crane-post is thus warmed down to the very bottom. The under side of the lifting piston must communicate with the atmosphere, in order to enable it to work satisfactorily, otherwise in lowering the weight a vacuum would be formed below the piston which would retard the lowering and render it impossible to overhaul the piston and rope when the weight was removed; and as a direct communication between the cylinder and the atmosphere would cause the cylinder to be filled with cold air after every lift, entailing a great loss of heat, to obviate this the blow-through pipe T is connected to the casing of the turning cylinder F, so as to allow the exhaust steam from the casing to follow up the piston B in lowering the weight. The turning-round piston H, shown enlarged in Figs. 4965, 4966, is made with four brass packing bars pressed up by springs, with a V piece inserted in each of the four corners and kept up by a spring; these corner pieces are made of white metal, and being softer than brass the point will wear as fast as the sides of the packing bars, and thereby keep the corners always tight. This piston is made independent of the rest of the crane, the packing bars being fitted and ground into their place, springs put in and the cover bolted down before the piston is put in its place; the bolt-heads are sunk in the cover, and the fitting strips U carefully planed and well fitted into the radical forked arm H, Fig. 4959, which is planed out to embrace the piston. This arm is made of malleable iron and securely bolted to the crane-post A; it is made $\frac{1}{2}$ in. shorter at each end than the cylinder F, so as to allow the crane-post to work up or down without jamming the piston in the cylinder. To examine or repair this piston it is only requisite to unscrew and lower the cylinder-

cover, and the piston can be drawn down from its place and removed entirely. The well in which the crane-post A works is kept quite dry by a cast-iron lining extending entire to the level of high water, Fig. 4957, where a recess is cut out on one side to allow of going down into the well to examine and grease the crane-step S at the bottom.

A crane of this construction, with a lift of 22 ft. and a radius of 20 ft., will lift, swing round, discharge, and swing back to reload three times a minute, or will discharge three tubs of coal of 2 tons each in one minute, or a greater quantity if the tubs can be filled fast enough. In addition to the expedition of these cranes, the smoothness of their motion and the absence of any jerking, such as takes place with chains and the ordinary gearing, are of importance, preventing any undue strain upon the foundation, or the sudden breakage of chains or other parts of the crane. Smoothness of motion is obviously of great advantage when cranes are used on board ship, for it is well known that the unsteady motion of the present cranes is very injurious to the decks: this is so much the case that it is impossible to keep the decks water-tight for any considerable time; and when covered with lead or sheet iron to prevent the water getting through, the decks and beams are eventually so much injured by the constant jerking and vibration caused by the ordinary steam-cranes, that repairs are required more frequently and at a greater expense than would otherwise be the case.

4967. 4968. 4969. 4970.

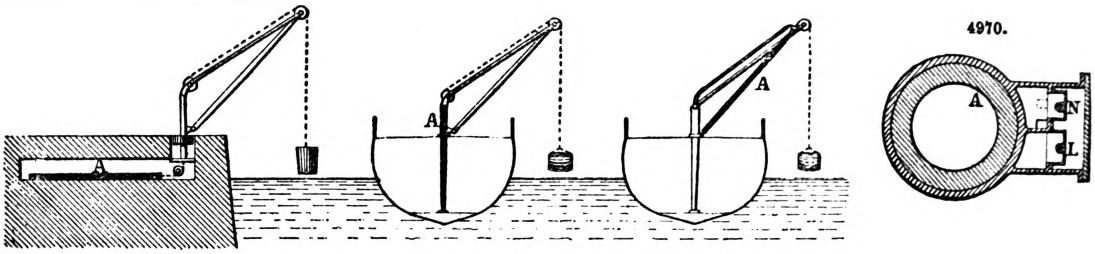

Another arrangement of this steam-crane is shown in the diagram, Fig. 4967, intended for situations where there is not sufficient depth for the crane-post, or where from other causes the post cannot be carried down. In this arrangement the lifting cylinder A, shown black in the diagrams, is laid horizontally below the surface of the ground, and the rope is guided to the post by a pulley; the cylinder may be close to the surface, and the rope then pass over a pulley at the stuffing box and down at an easy angle to the pulley below the crane-post. This arrangement is also suitable for warehouses, the rope leading to the different floors; or the cylinder may stand upright in the warehouse and have a handle on each floor for working it. Figs. 4968, 4969, represent modifications of the crane proposed for application on board ships. In Fig. 4969 the jib A is made of malleable iron, and forms the lifting cylinder; this arrangement is intended to be used on board vessels where it is not desirable that the steam-cylinder should go below the deck. There are also several other situations where this mode of working by the application of a direct-acting steam-cylinder with wire-rope piston-rod might be adopted with advantage, such as for opening and closing dock gates and bridges.

The steam-crane, Figs. 4971 to 4973, was designed by J. Campbell Evans for use on board

4971. 4972.

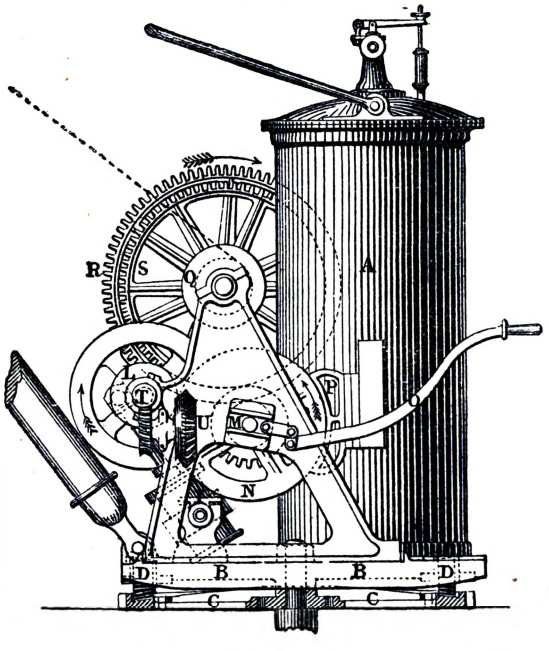

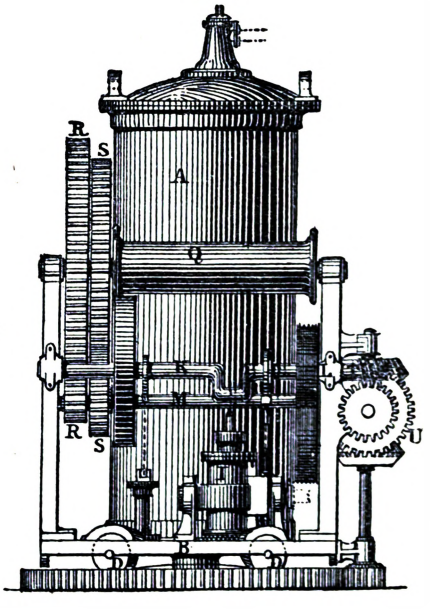

steam-vessels, and the chief points to be aimed at were compactness, facility of fixing, simplicity in the mode of working, and durability.

4973.

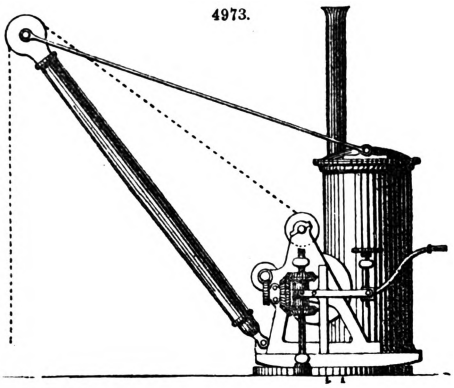

4974.

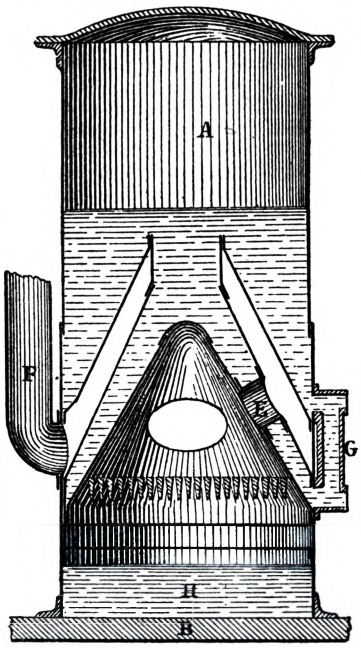

To obtain these advantages, in the present steam-crane the boiler A is placed as close as possible to the crane, and revolves with it; and by making the top of the boiler of cast iron with lugs for attaching the tension-rods, it serves the double purpose of boiler and crane-post. The bed-plate B upon which the crane and boiler are placed is fixed to the foundation plate C by a centre bolt, which bears all the upward strain; the downward pressure is taken by the rollers D running on the foundation plate C; this plate is solidly bedded on timber laid on the deck of the vessel.

To avoid upright tubes and horizontal tube plates, the heating surface of the boiler A is arranged in cones, Fig. 4974. The first cone or fire-box is exposed to the direct radiation of the fire, after which the heat passes through the opening E nearly opposite the fire-door into the space between the second and third cones, where it is absorbed by the water-spaces on either side, and passes round to the funnel F opposite. In this way a sufficient heating surface is obtained without any horizontal surfaces in the boiler for deposit to accumulate upon. The two angles or bottoms of the water-spaces are below the direct action of the fire, and are connected by pipes G to allow for the circulation of the water, provided with plugs and cocks for cleaning. The water-tank H is placed under the boiler, this position serving to heat the feed-water and to preserve the cast-iron bed-plate B from danger of fracture by the heat of the fire.

The crane is worked by a single oscillating cylinder I, shown enlarged in Fig. 4978, supported by brackets on the bed-plate B. The joints for the steam and exhaust pipes at the trunnions are made tight by gun-metal cones J, Fig. 4977, fitted to the trunnions and held by studs in the

4975.

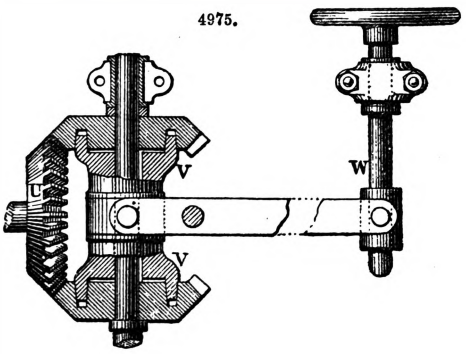

4976.

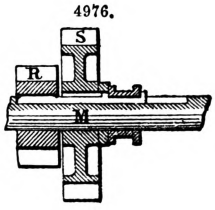

4978.

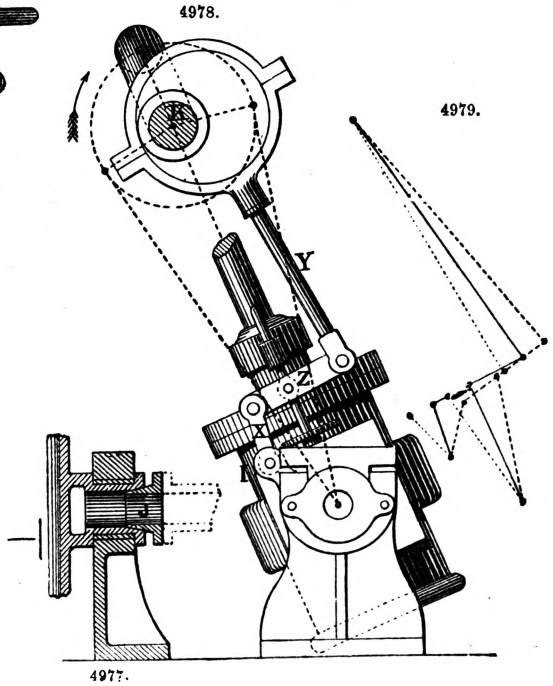

4979.

4977.

brackets; when these have become polished by working, the wear upon them is very slight, and this construction has been found very suitable for the rough treatment to which cranes are usually subject. On the crank-shaft K is a friction-wheel L, Figs. 4971, 4972, kept continually revolving by the engine. On the second shaft M is another friction-wheel N, which can be moved by the lever O into gear with the driving wheel L, or by an opposite motion of the lever can be pressed against the brake P, or when lowering can be held between the two. The other end of the shaft M carries pinions gearing into wheels on the shaft of the chain-barrel Q. There are two pairs of wheels and pinions, R and S, for varying the speed according to the weight to be raised; the pinions are thrown in and out of gear by a sliding key, enlarged in Fig. 4976, instead of the ordinary clutch; by this means the width between the frames that would be required for moving the ordinary clutch is saved.

A principal difficulty experienced in steam-cranes for ship purposes is in the arrangement of the turning gear, so that when the vessel leans over to one side, the crane shall be powerful enough to swing the weight and yet not cause a sudden start or shock to break the gear. In this crane a coned friction-clutch is used, Fig. 4975, to allow a slip at first and to start the weight gradually; and the arrangement of the foundation plate C of the crane admits of a much larger spur-wheel than usual being employed to bring up the power. On the crank-shaft K is a worm T working into a worm-wheel on the shaft of the bevel-wheel U, Figs. 4972, 4975, which gears into the two bevel-wheels above and below; as these are kept constantly revolving by the engine, the crane can be moved round either way by raising or lowering the coned clutch V by the lever and screw W. The lifting lever O and the screw W being close together, Fig. 4973, the two operations of lifting and turning the weight are easily managed by one man.

The valve motion of the oscillating cylinder I, Fig. 4978, is designed to compensate for the oscillation of the cylinder without the use of sweeps and guides. A radius rod X is centred on the cylinder bracket and connected to the eccentric rod Y by a link Z, to which the valve-rod is attached by a pin. The link Z combines the vibrations of the eccentric rod Y and radius rod X, so that at the point where the valve-rod is attached the curve described by the radius rod compensates for that described by the eccentric rod in such a degree as to bring the valve-rod into the curve it would naturally be made to describe by the oscillation of the cylinder, as shown by the diagram, Fig. 4979.

Figs. 4980, 4981, are an elevation and plan of a locomotive steam-crane, constructed by Appleby Brothers, London, a type of crane used extensively for facilitating the loading and unloading of goods at railways, harbours, and so on.

The carriage is generally in one massive casting of suitable form to take the central post, which is of wrought iron, and horns are provided with bearings for the travelling wheels which are placed inside the bed for narrow gauge and outside for wide gauge. The top of the carriage is recessed for a spur-wheel fitting on the column, and made fast or loose with it, and this to a raised roller path truly turned on the outer edge of the recess.

The superstructure of the crane consists of a base-plate revolving on the central column fitted with three friction-rollers, two being placed directly below the jib and one at the back to take the weight of boiler and tank. A

4980.

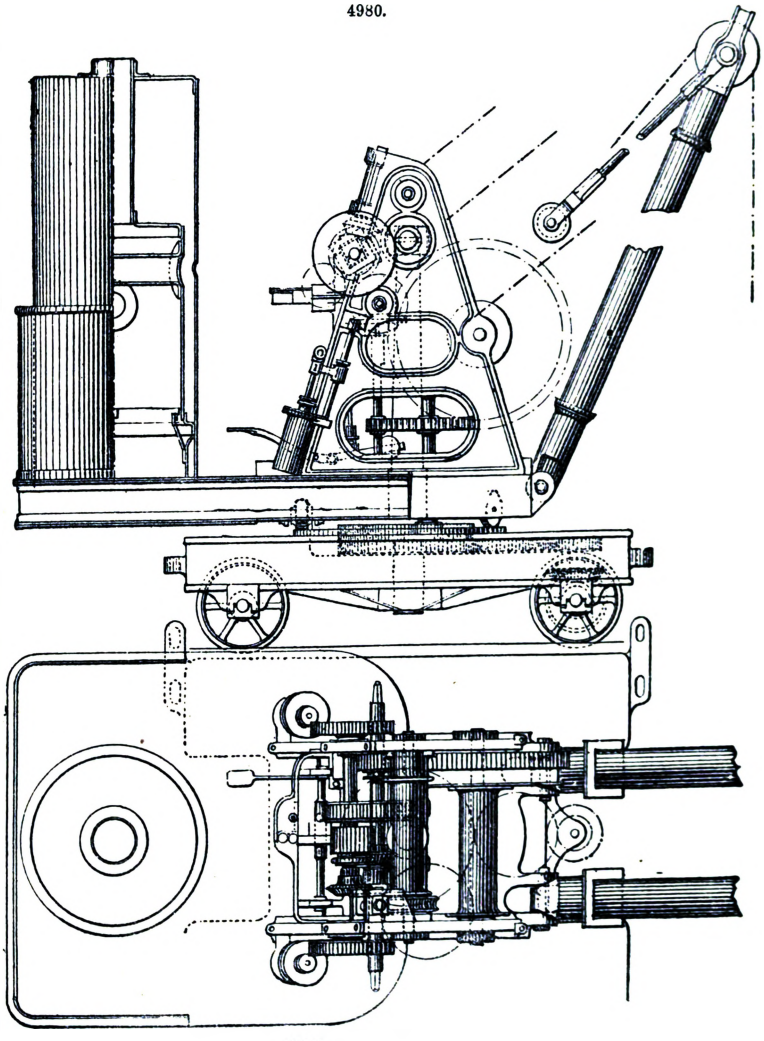

4981.

pair of A frames are erected on this base-plate with all the bearings and fittings for the machinery and engines. A wrought-iron feed-water tank of the depth of the revolving base is bolted on to it and carries the boiler a considerable distance away from the centre of the crane-post, forming a counterbalance to the load to be lifted, as well as a foot-plate for the driver. The boiler is vertical, the internal fire-box being fitted with two cross water-tubes; this form of boiler, although not the most economical as regards fuel, is preferred to multitubular ones as it has often to be worked with the worst kind of water, with but little attention, and a stoppage is considered of far greater moment than strict economy in fuel; but the cranes are made with multitubular boilers for countries where fuel is expensive. The boiler is fitted with all the usual steam and furnace requirements, including an extra lock-up safety-valve; and a small extra steam feed-pump, to feed the boiler if the crane is not running, is sometimes added.

The crane is fitted with a pair of direct-acting steam-cylinders placed slightly at an angle, one on the outside of each side frame, the crank-pins being fitted into a pair of balanced disc-plates—the engine-shaft between the side frames carries a bevel-wheel made fast or loose on the shaft by a toothed clutch for driving an oblique worm-shaft gearing into a tangent-wheel on the derrick chain-barrel for raising or lowering the jib, the worm-wheel securely locking the jib at any desired radius. On the middle of the crank-shaft a wide spur-wheel is keyed; this wheel gears into a narrow wheel below it on a weigh shaft which has a small crank-pin at each end equal to the stroke of the side valves; this narrow wheel can be moved by a hand lever, laterally, about 4 in. on a spiral feather, thus reversing the valves for running the engines in either direction; this arrangement is found to answer the purpose and to give more durability than an ordinary link-motion. On the left-hand side of crank-shaft are placed a pair of spur-wheels gearing into wheels on the counter-shaft below; one pair of these wheels are of equal and the other of unequal diameters, either pair being made drivers by a double toothed clutch; the ends of counter-shaft are provided with squares for ordinary handles to work the crane by hand if desired. On this shaft is also fitted a set of bevel-wheels and double friction-cones for giving motion to the slewing and travelling motions; and this shaft having two speeds imparted to it from the engine-shaft will consequently communicate two speeds to the slewing and travelling motions.

The motion from this set of wheels is carried by a vertical shaft and train of wheels to the spur-wheel on column. This spur-wheel on the column is of double the depth of the pinions gearing into it; the pinions are placed at different heights so that the pinion revolving round the spur-wheel in slewing clears the fixed pinion driving the travelling gear. When it is desired to travel the crane, the crane body is fixed to the carriage, and the wheel then revolves on the crane-post and drives the travelling motion.

The friction-cones are put in and out of contact by an eccentric lever, and can be thrown into contact whilst the engines are running, putting the jib gradually in motion, without shock; when it is desired to arrest its motion the cones are reversed, and they then act as a brake.

The lifting motion is conveyed from the counter-shaft by a pinion sliding on a feather in and out of gear with a spur-wheel on the barrel-shaft; in lowering, this pinion is drawn out and the descending load is controlled by a strap-brake actuated by the foot of the driver. Should the driver desire to leave the load hanging for any time, the foot-lever is fitted with a pawl and ratchet to hold the load when the foot is removed from the lever. The slewing motion being given by reversing friction-cones, it can be put into action while a load is being lifted or lowered, saving much time.

When the maximum loads are lifted, the power of lifting is doubled by a single block, and the chain looped up to the jib head; this arrangement being adopted because the majority of the loads are light and require handling quickly.

Cranes of this construction are made of various powers, the proportions being modified to suit the duty for which they are required.

The crane-posts are made of wrought iron, and the travelling wheels are chilled on the face. There is ample margin of strength throughout, and generally the details of construction of Appleby's cranes have been well considered and carefully worked out.

The cranes most frequently employed in America for building purposes are of two kinds, those which consist of a mast and movable jib, and those in which the jib is fixed at a certain angle with the mast. In the former system the mast is held by three pieces of timber, having at their upper ends a collar which passes over a kind of gudgeon on the top of the mast, Figs. 4982, 4983. The jib is jointed at its lower end to a piece of iron bolted to the mast, so that it may turn about a horizontal axis, or be inclined to a greater or less angle. It is moved by a chain, which, after passing over two pulleys fixed one at the top of the mast, the other at the upper end of the jib, is brought down by the side of the mast and then carried away horizontally to a steam-windlass. A third pulley hanging from the head of the jib supports the weight to be raised by means of a tackle-block. The hoisting chain passes down the jib and into the lower end of the mast, which is here hollow, and down through the pivot and bed, from whence it is carried away horizontally to another steam-windlass. Cranes of this kind are employed on the Illinois Canal to ship the stone from the Lemount quarries.

Of the second kind we may cite one example used in the work of enlarging the Capitol at Washington and subsequently at the Cabin John bridge, aqueduct of the Potomac. In this crane, Figs. 4984, 4985, the jib is fixed at its lower end in a shoe or socket bolted to the bottom of the mast. The length of these two pieces, mast and jib, is 50 ft., and they form a nearly equilateral triangle with the 1-in. iron rod which joins their two extremities. The mast is 13 in. by 13 in., and the jib 10 in. by 10 in. scantling. The mast is held by wire ropes. Six pulleys, 13 in. in diameter, are used, two at the head of the mast and jib respectively, and two others capable of oscillating about the same points; the two latter are simply suspended in space by ropes, but are held together by a short connecting chain upon which the lifting hook is fixed.

There are two distinct sets of ropes, each connected with a windlass, and one of which ends at

the oscillating pulley b' of the mast after passing twice over this same pulley, and also over one of the free pulleys c'; the other, after passing over the two fixed pulleys b and c, passes twice over

4982.

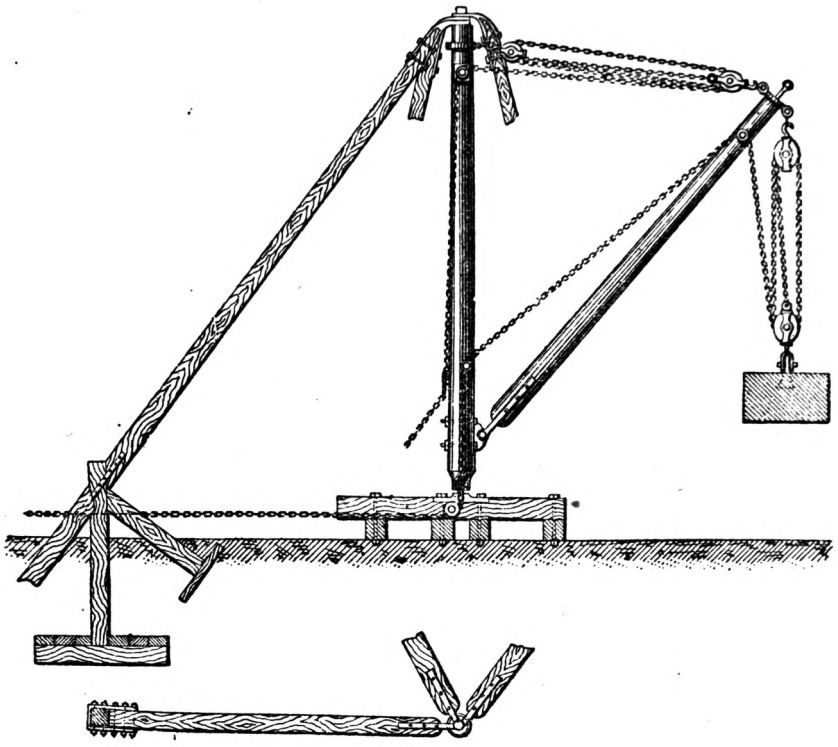

4983.

4984.

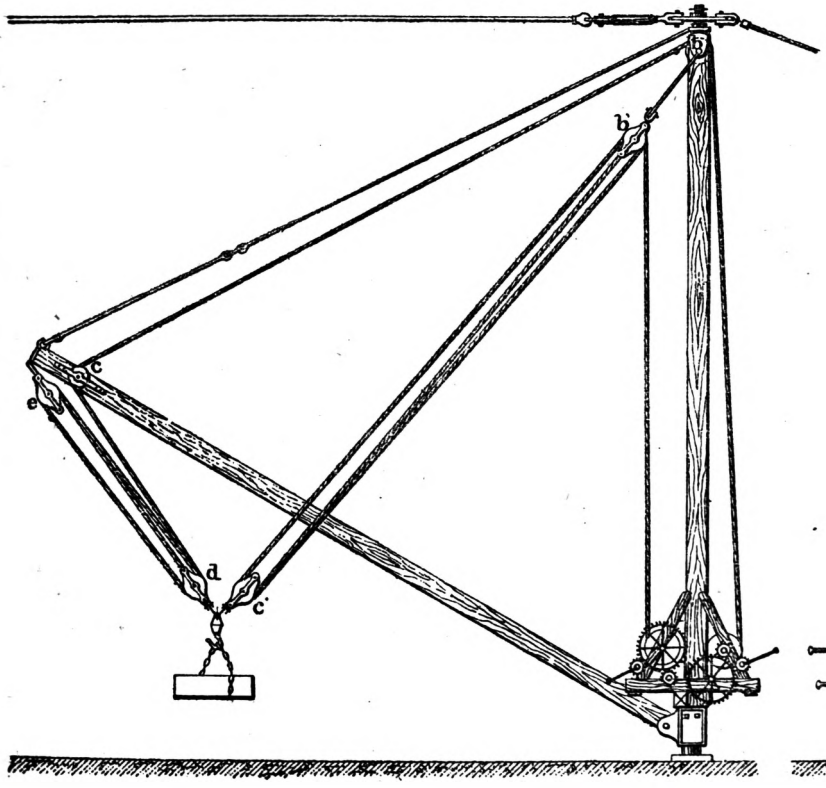

4985

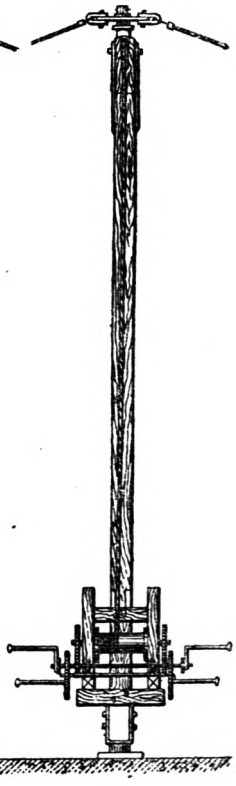

the second free pulley *d* and the oscillating pulley *e* of the jib, and is finally brought back and fixed to the free pulley *d*. It will be seen by referring to the figure that by hauling the rope on the right and letting go the other at the same time, the weight will be carried to the left, and the reverse; and that if both are hauled at the same time the weight will be raised. Hence it follows that by communicating to the two windlasses unequal and properly-combined velocities, the weight may be removed to any spot in the vertical plane of the crane. In nearly all cases the crane is turned round by hand, though the windlasses are worked by steam-power, and for this purpose a rope is fixed to the head of the jib.

The crane used for unloading coal on to the quays of New York consists essentially of an upright standard or bearing-post and an inclined arm or jib, the upper ends of which are connected by an iron rod. The upright portion is simply scarfed upon one of the posts on the quay. The jib rests upon a hinge against one side of the upright shaft, the north, for instance. At the upper end of the jib is a pulley, over which a rope passes having at one end a receptacle for the coal, which is shovelled in by a man on board the vessel; the other end of the rope is carried away to the north of the mast and passed under a second pulley fixed on a level with the ground, and attached to the horse which moves the lifting apparatus during the standing still of the coal-cart. Left to itself, the movable triangle, which we suppose at first directed towards the vessel, would make a quarter turn towards the north and bring the load of coals, previously drawn up to the required height, directly over the cart which is to receive it; it is necessary therefore to keep the crane in its place during the operation of lifting. For this purpose another rope is fixed to the upper end of the jib and carried away southward to a post, around which it is wound in one or two turns. A man stationed at this post lets go the rope when it is time for the crane to turn, and pulls the crane back by it again when the load has been emptied into the cart.

The New York ice cranes, Figs. 4986, 4987, are equally simple. They are composed of a single

4986.

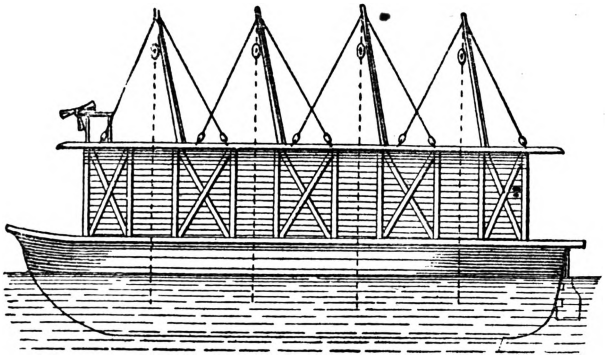

4987.

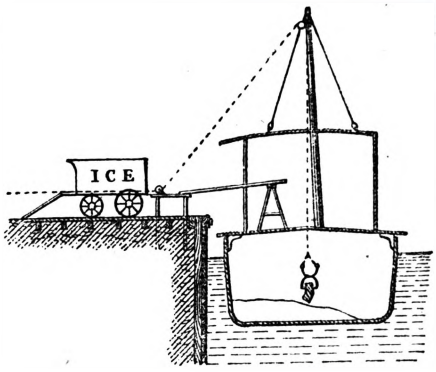

standard, kept upright by stays and furnished with a pulley. The ice is lifted by a lazy tongs attached to the hauling rope, which is so arranged as to swing it immediately into the ice cart, Fig. 4987.

The arrangement of the ballast-cranes erected on one of the jetties of the Tyne docks for the delivery of ballast is shown by Figs. 4988, 4989. They are operated by hydraulic power. The rate of delivery when the machinery is in full work is 50 tons an hour for each crane. With the exception of the use of hydraulic power instead of steam, the arrangement of these cranes is nearly similar to those which have been for some time in use at Hartlepool.

The gins, Figs. 4990, 4991, employed

4988.

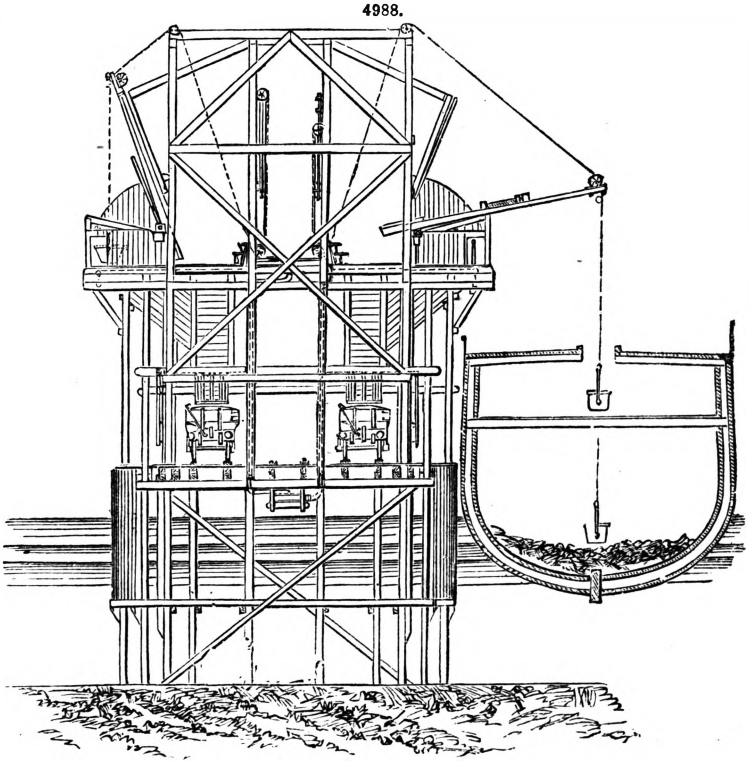

at Cincinnati for raising the stone slabs with which the fronts of the houses are covered, consist of two poles slightly inclined, and supporting another at their upper ends. These, with the windlass, rest upon a bed with four wheels. The upper pole carries a pulley at about 65 ft. above the ground. It is held by two ropes placed obliquely in the ground behind, and supported by a spur. The stones are held by a special appliance, in which two screws press against the faces of the slab.

4989.

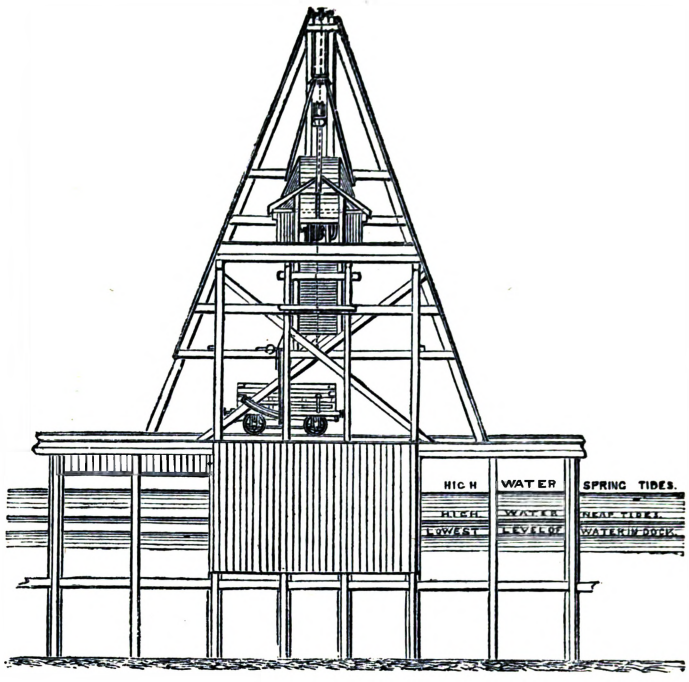

The boom-derrick represented in Figs. 4992, 4993, is commonly employed in America, especially in bridge-building. The boom, which consists of two twin pieces, extends a little beyond the back of the mast, and this end of the boom is tied to the top and bottom of the mast by two strong wire ropes. The portion of the boom over which the traveller works is supported by ties from the top of the mast. The weight is suspended to this traveller through the medium of a pulley. There are besides three fixed pulleys, two upon the boom near the mast and one at the end. An endless rope goes from one of the windlasses to the other, passing over not only the three fixed pulleys, but also the two rollers of the traveller, and, in the space exactly in the middle of this symmetrical circuit, the pulley, to the frame of which the lifting hook is attached. By communicating to the two windlasses, or allowing them to take unequal velocities, the traveller is moved forward or backward, and at the same time the weight may be raised or lowered at pleasure. When the derrick has to be turned far round, it is better to lead the ropes down through the pivot made hollow for that purpose, as in the case explained above.

4990. 4991.

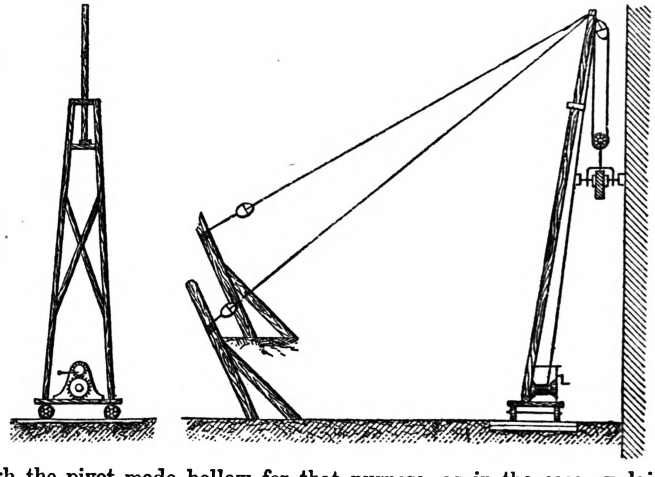

Most of the appliances employed in the American ports for removing the masts of ships are of the nature of this derrick. In these cases the boom is swung to its mast by the middle, and the weight is balanced by a counterpoise. These balance derricks are sometimes employed in situations where it is inconvenient to fix guys.

Movable derricks, or those which are capable of transporting their load from one spot to another otherwise than by merely revolving on their axes, differ from those we have described only in the manner of their erection. The mechanical principles upon which they act are in all cases the same. Of movable derricks, the floating are the most important.

The common characteristics of these machines are lightness, simplicity, and cheapness, both of construction and working. Instead of heavy and expensive machines, these are often the simplest appliances made on the spot with two or three pieces of wood and a few bits of rope. As we have said above, they are always turned round by hand, and the intermediate time of the man or the men set to do this may be employed in other work.

Figs. 4994 to 4996 are views of a substantially-built 15-ton crane with timber framing, arranged with compound braces, by Wm. B. Bement and Son, Philadelphia. The reel or winding drum is driven by spur-gearing operated by a winch. The traversing movement is attained by means of

the gearing upon the beam, which, through a chain indicated in the dotted lines, moves this gearing out or in upon the top beam.

4992.

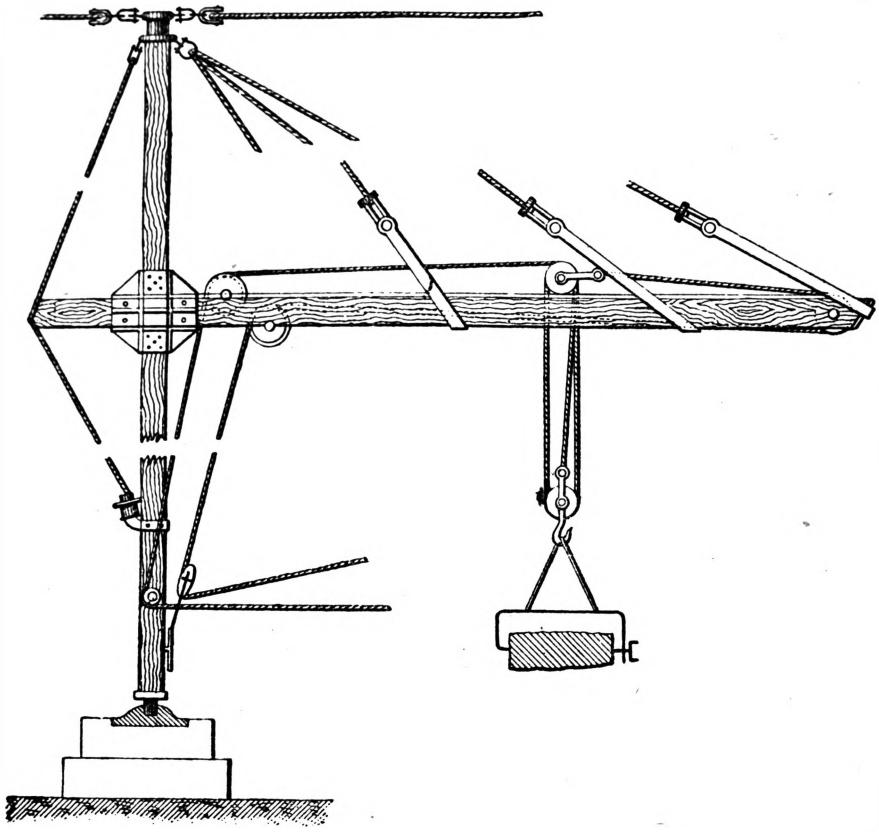

4993.

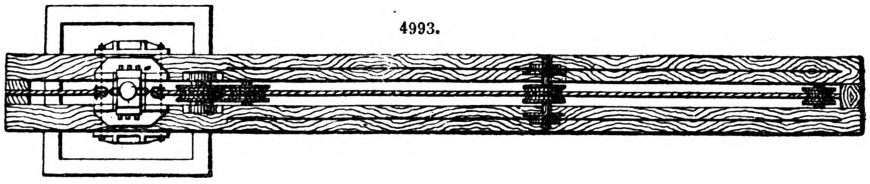

When the load is suspended at the end of the crane, the vertical brace is subjected to a tensile strain, which is provided for by its attachment to the iron shoes at the ends. To resist the torsional strain in the saddle, caused by the diagonal draught of the main chains, an arm is projected some distance from the saddle, and carries a roller, Fig. 4996, that presses upon the inside of the framing, and relieves the main track. The sheaves and general tackle are of the ordinary construction.

Figs. 4997, 4998, are of a steam travelling crane used in the construction of the Grand Trunk Railway of Canada. The steam engine and boiler, with its driving gear, is supported upon a platform at one extremity of the transverse carriage, being fixed thereto, and travelling with it, in a longitudinal direction.

The advantages sought by this crane are, that the steam-power travels with the traversing carriage, and does not require longitudinal shafts or bearings, which is the case when a fixed engine is employed; the lubrication and friction of the longitudinal shafting being also saved. A pair of small direct-acting horizontal high-pressure steam-engines A A are secured to the two main timbers B B of the traversing carriage. The boiler C is constructed for burning wood; the tubes are made of solid copper, without seam or joint, so that the acid from the wood cannot corrode them. The engine and boiler with the driving gear are protected from the weather by a cabin D D constructed of light framework and covered with a corrugated iron roof. The power of the engine is transmitted by a spur-pinion C upon the middle of the crank-shaft, through a spur-wheel placed on the horizontal main driving shaft F, which communicates the motion for hoisting, lowering, traversing, and moving the crane longitudinally. The motions can be used independently or simultaneously. The communication of the power to the various motions is effected upon the main shaft by three sets of mitre-wheels, which are engaged or disengaged at pleasure, by means of three handles, G, H, I, that move the sliding clutch boxes as required by the attendant. Three mitre-wheels are furnished to each motion, so that whilst the engine revolves continually in one direction the reversing of any motion can be effected by the intermediate wheels.

The motion for moving the carriage longitudinally is conveyed through the wheels at I, at the extremity of the driving shaft farthest from the boiler. The middle one of the three handles, H,

engages or disengages the motion **K** for hoisting and lowering; and the handle G next to the boiler belongs to the motion L, for traversing the crab with its weight.

4996.

4995.

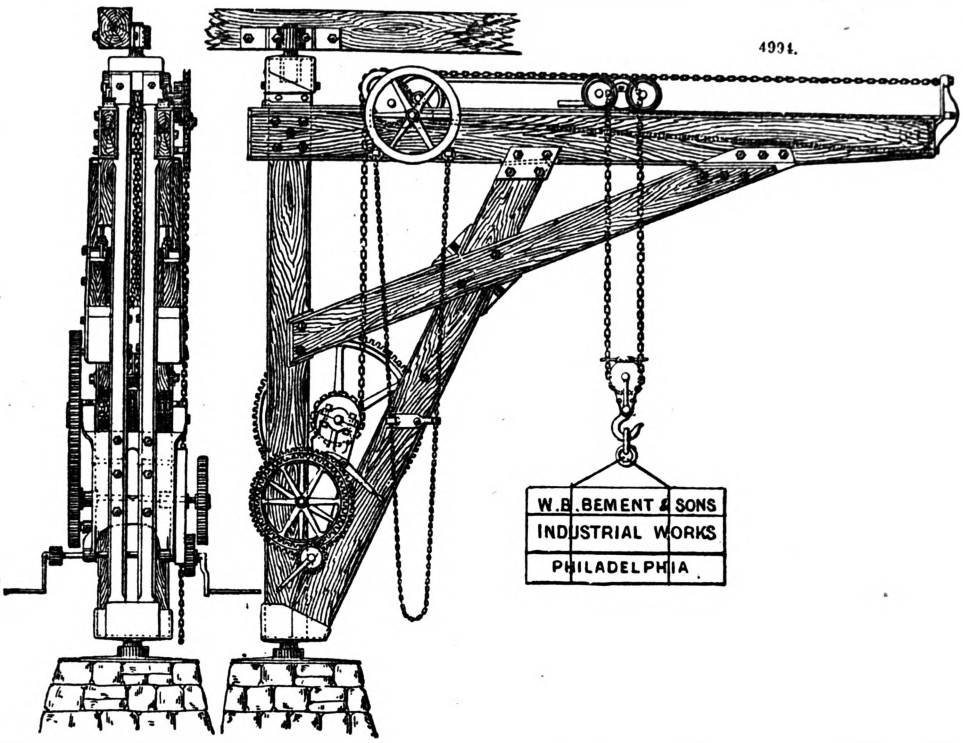

The arrangement for moving the crane longitudinally by means of spur-gearing, driving, and travelling wheels T T is similar to the plan adapted to a hand travelling crane.

The travelling wheels run upon rails M M, which are fixed at 6·4 ft. gauge, centre to centre.

The hoisting and lowering motion is transmitted to the chain-barrel K of the crab, by means of an endless chain N, which is placed in the longitudinal direction of the traversing carriage, and is driven by a pulley fixed upon the counter-shaft O parallel to the main shaft; the motion is communicated by a pair of mitre-wheels through the short intermediate shaft at right angles. This endless chain is connected to a pair of mitre-wheels fixed at the lower end of the crab-carriage, which give motion to a worm-wheel, the latter being keyed upon the chain-barrel.

The transverse motion of the crab is obtained by another chain P placed in a parallel position on the opposite side of the main timbers of the traverser carriage; this chain is attached to the four-wheeled crab, and passes over a pulley on the axis of the worm-wheel L, which is driven by the lever gear.

An additional handle R is provided for the purpose of throwing out of gear the chain N of the hoisting motion by means of the clutch-box U at the time of the traverse motion of the crab, and the chain N then runs with the crab, the pulley at U turning loose on the shaft.

A simple apparatus for adjusting the requisite tension of these chains is provided at the farthest extremity of the two main timbers of the traversing carriage at the opposite end to the engine, consisting of a tightening pulley S S sliding in grooves and drawn back by a screw.

This crane is constructed to lift at the rate of 6 ft. a minute. The longitudinal motion works at the rate of 30 ft. and the traverse motion at the rate of 20 ft. a minute. The engines are 6 horse-power collectively.

Figs. 4999 to 5001 are of a travelling crane employed at the Steam Plough Works, Leeds, for lifting locomotive engines and other heavy work, ranging from 15 tons downwards; it has a span of 40 ft., and traverses a length of 180 ft. The three different motions for longitudinal traverse, cross traverse, and hoisting, are all derived from one endless steel wire rope $\frac{3}{4}$ in. diameter, and weighing 2 lbs. a yard. This rope is driven at a speed of four miles an hour, by means of a clip-pulley, Figs. 67 to 71, p. 24, fixed at one end of the strop, which is driven by belts and gearing from the engine working the strop. The rope is entirely unsupported between the two ends of the strop, and is not strained tight, but hangs loose, with only a slight tension, because the peculiar action of the clip-pulley allows of the whole power being communicated to the rope by the grip of the pulley through half its circumference even when the tail-rope is entirely slack. The clip-pulley A, Fig. 4999, fixed

at the end of the strop, is speeded to drive the wire rope B B at the rate of four miles an hour, and lays hold of the rope with an amount of grip proportionate to the strain thrown upon the load, releasing it from its grasp when the rope has passed the centre line. The construction and fixing of the

4997.

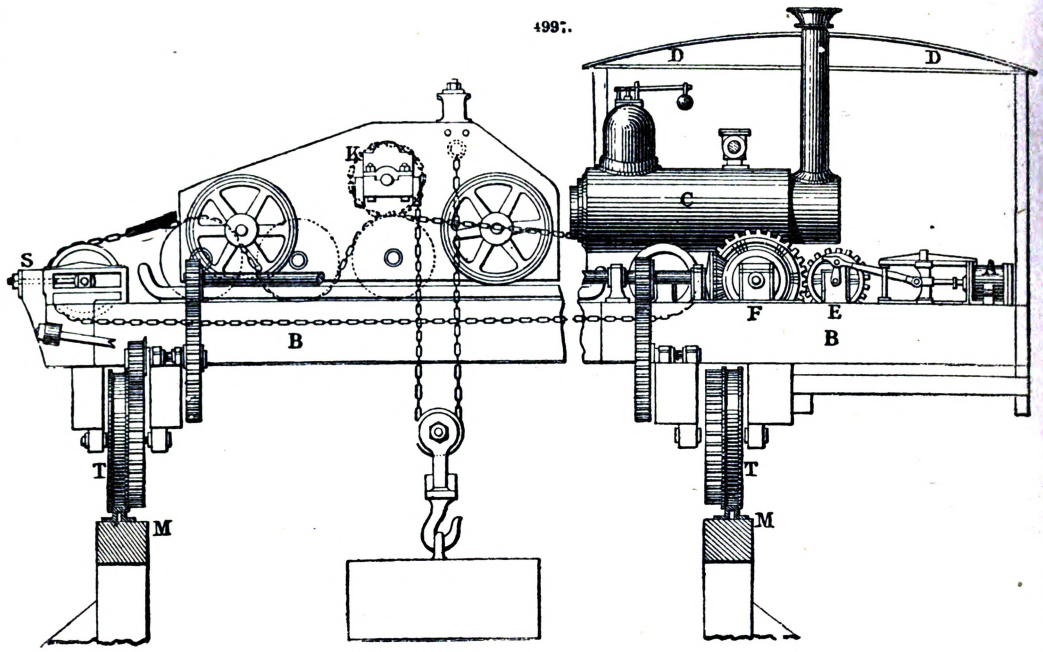

4998.

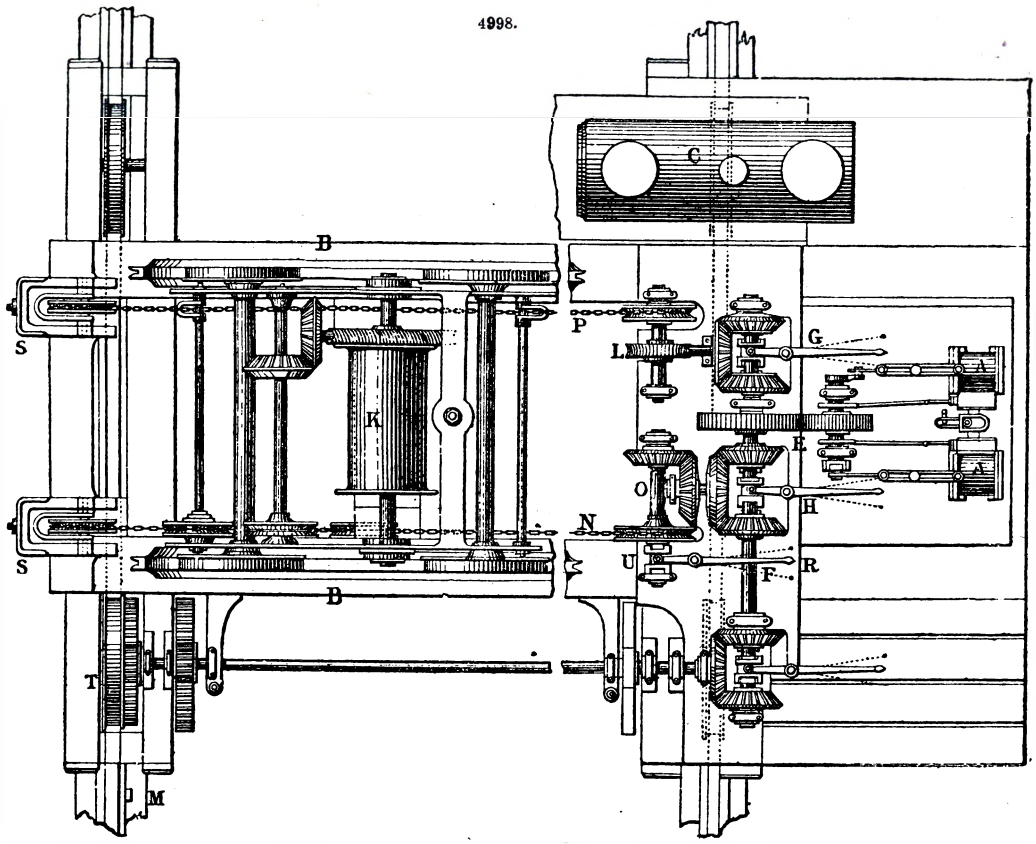

movable jaws or clip round the circumference of the clip-pulley are shown in Figs. 69, 70. At one end of the travelling platform C of the crane is fixed another clip-pulley D, Figs. 5001, 5002, of the same size and construction, round which the wire rope passes, making three-quarters of a turn

round it. The rope then passes on to the farther end of the strop, and round the grooved pulley E, at that end, Figs. 4999 to 5001; this pulley is centred in a sliding frame provided with an adjusting screw G, for tightening up the rope to any tension required. The wire rope has no slippers or

4999.

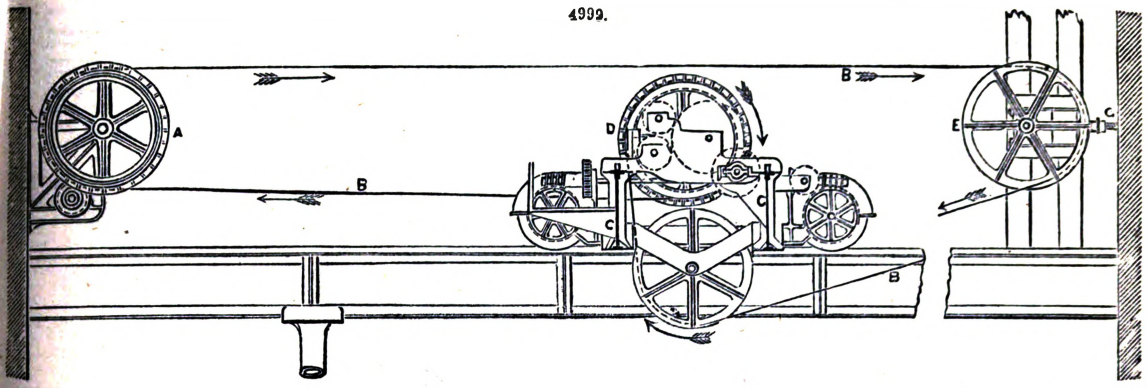

5000.

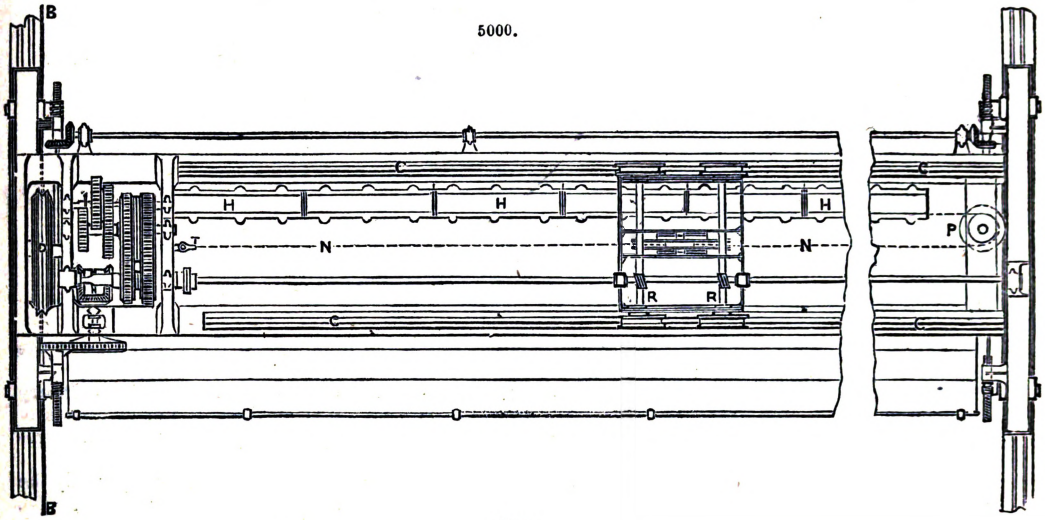

5001.

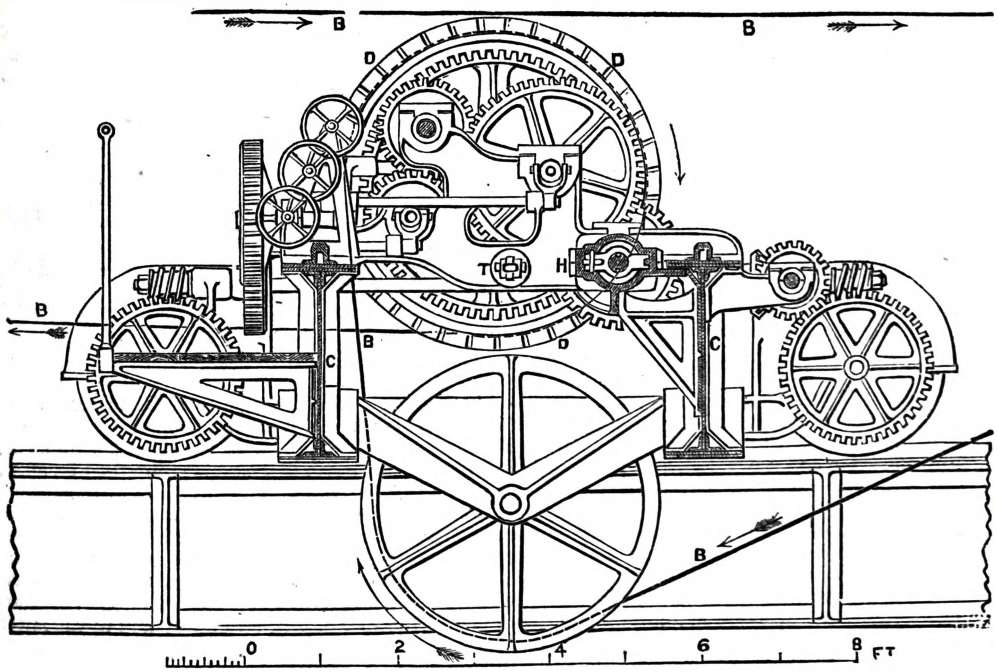

carrying pulleys to support it, and is consequently free from the friction that accompanies their use. The strop in which this crane works is 180 ft. long, and the rope hangs in a catenary curve

5002.

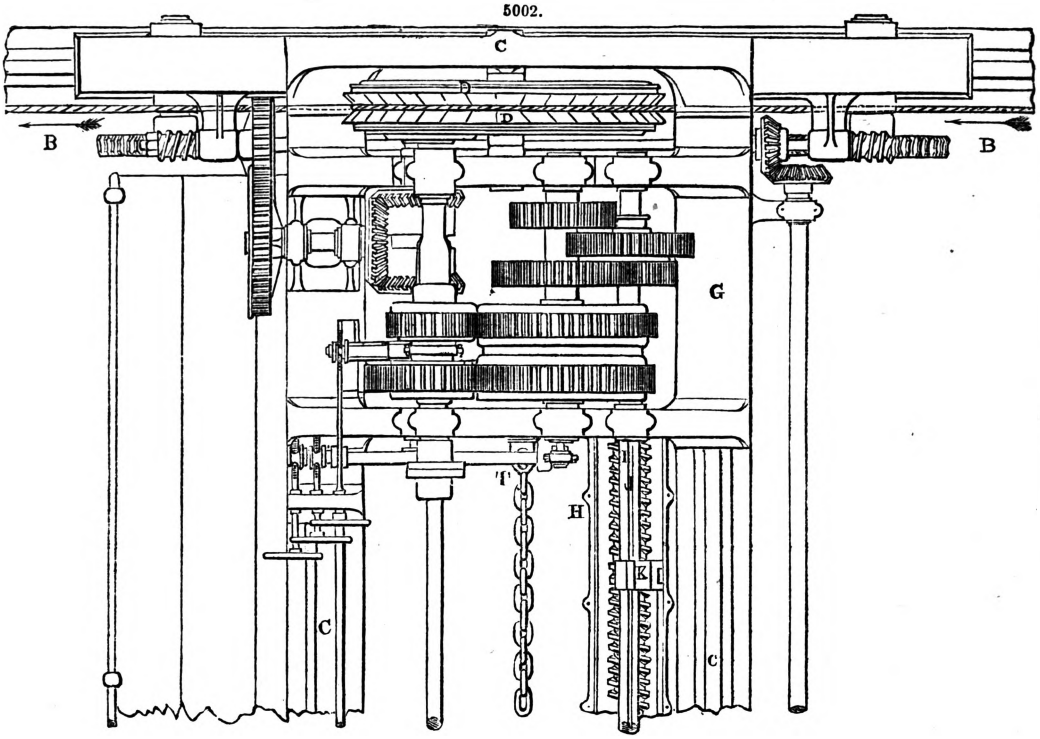

through that distance, the deflection from a straight line being from 3 in. to 2 ft., according to the degree of tightening by the end pulley E.

The gearing for working the longitudinal traverse and the cross traverse is of the ordinary description, the motion being communicated from the clip-pulley D on the traveller by means of friction-clutches. The longitudinal traverse has a speed of 30 ft. a minute, and the cross traverse 20 ft. a minute.

The lifting gear consists of a very long cast-iron nut or screwed barrel H H, extending nearly the whole length of the traveller, Fig. 5000, and inside the barrel works a short screw I, Fig. 5003, sliding on two feathers upon the long shaft J J, which is driven by a friction-clutch from the clip-pulley D on the traveller, so that by the revolution of the shaft the screw is traversed along within the barrel. The long driving shaft J is supported at intermediate points of its length by the two sliding brass steps K K, Figs. 5003, 5005, sliding along freely within the barrel H, and kept apart from each other at the distance of half the length of the barrel by the long rod L; thus the shaft J

5003.

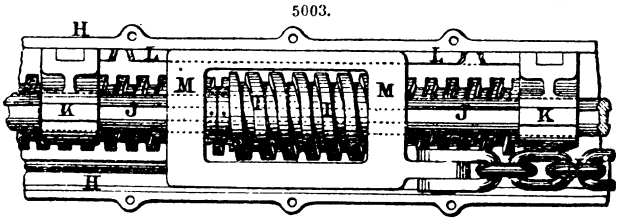

5004.

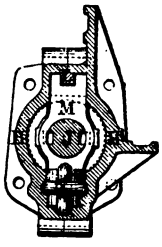

5005.

is never left unsupported for more than half of its length. The screwed barrel H is cast in two halves longitudinally, and bolted together as in Fig. 5004; and the pitch of the screw thread is $1\frac{3}{4}$ in., the diameter being $6\frac{1}{4}$ in. One end of the hoisting chain being attached to the screw frame M, Fig. 5003, the chain N passes along through the inside of the barrel H round a pulley P, Fig. 5000, at the farther end of the traveller, then over a pulley on the cross traversing carriage R, Figs. 5006, 5007, down to the snatch-block S, and up again over a second pulley on the carriage R, and the end is attached to the nearer extremity of the traveller at T, Fig. 5000. There is no reason, however, why an ordinary crab might not be used, worked by a shaft extending from end to end of the traveller; and that plan has been adopted in certain cases; but for heavy weight it is still considered that the long screwed barrel is preferable. The crane has two speeds for the lifting gear, one being at the rate of 6 ft. a minute, and the other at the rate of 3 ft. a minute; and at the latter speed the crane is calculated to lift 15 tons.

It is most desirable that all machinery of this kind should be kept constantly running so as to be available for immediate use at any moment when required without any delay for starting it to work; but inasmuch as the total time during which the crane is actually in use does not amount to more than one hour out of ten, it is of special importance that the power employed to drive the rope when the crane is not in use should be reduced to as small an amount as possible. If a quick running rope is employed, the absorption of power for keeping it in constant motion forms a large proportion of the total power required when lifting a load, and this is a loss which is always going on throughout the day; but when a slow speed of rope is employed this constant loss is greatly reduced. The pull required to put the wire rope in motion when the crane is standing idle is 128 lbs.; when lifting a load of 10 tons at the usual speed of 3 ft. a minute, the additional pull upon the rope due to the load is 191 lbs., making the total pull 319 lbs., and the horse-power required with the wire rope is constantly 3·4 horse-power, when standing idle these amounts being very much less than in the case of a quick-moving cord crane.

5006.

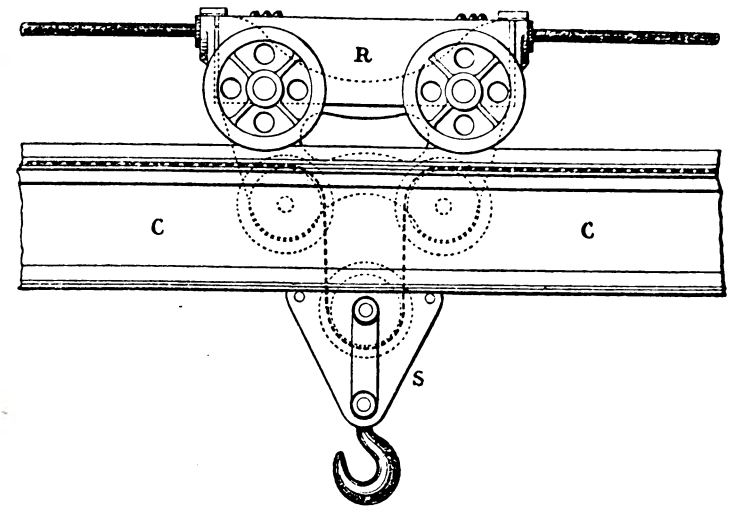

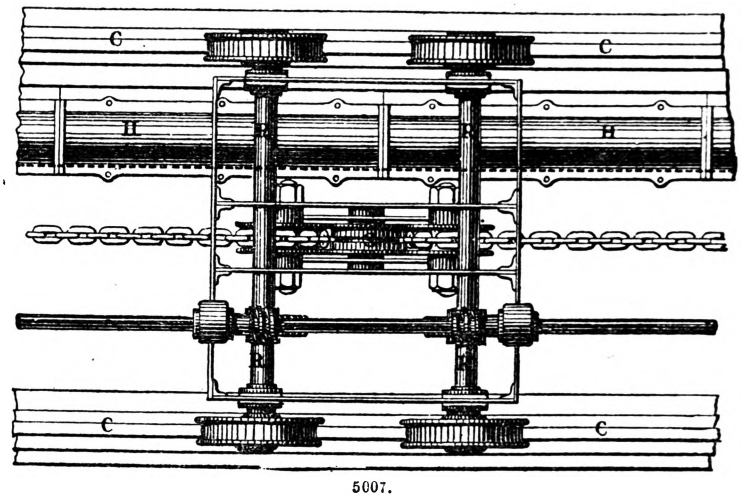

5007.

Figs. 5008 to 5010 relate to foundry hoists introduced by John Fernie, of Derby.

Fig. 5008 is a general plan of the hoist, as arranged with a pair of cupolas working together; Fig. 5009, vertical section of the hoist and cupola, showing the hoist raised in its highest position. Fig. 5010 shows the construction of the hoist in detail. A is a steam-cylinder 20 in. diameter, fitted loosely with a piston which has a range of 3 ft. Steam is supplied to the cylinder by the wrought-iron pipe B of 1¼ in. bore, by means of a three-way cock, which admits the steam or allows it to escape as required. The exhaust-pipe has a cock at its far end by which the time of the descent of the hoist is regulated. The cylinder is sunk in the ground, with its top level with the surface, and is surrounded with non-conducting material. C C C is a 4-in. cast-iron pipe running from the bottom of the cylinder to the bottom of the hoist, a length of about 40 yds. D is the cylinder of the hoist 12 ft. 9 in. long, bored out from end to end to 8 in. diameter, and sunk in a well, the top being about 12 in. below the level of the ground. The piston or ram C has a cup leather screwed on at the bottom to serve as packing. F is the piston-rod, formed for the sake of lightness of a wrought-iron pipe 3½ in. diameter and about ¼ in. thick, carrying at the top the light cast-iron platform G, 4 ft. square, on which the barrow or wagon, loaded with materials, is run. The platform is steadied in its ascent by the guides H; I I are india-rubber washers to break the shock of stoppage at top and bottom.

In working the hoist, the pipes C C C are first filled with water, till the piston of the steam-cylinder A rises up to the top of the cylinder, the water being supplied through a wrought-iron pipe ¾ in. bore from the force-pump of the engine that drives the fan. As there is always a little leakage at the cup leather of the piston E of the hoist, the capacity of the steam-cylinder A is made larger than that of the hoist-cylinder D to allow for this loss being nearly in the ratio of 2 to 1. The barrow or wagon being run on the platform, the steam is admitted on the top of the piston and the hoist begins to ascend. For the first stroke or two condensation takes place pretty

freely, and the hoist rises slowly; but the cylinder and water gradually get warm, and after a few strokes no perceptible condensation takes place. The hoist ascends the 10 ft. in 20 seconds when loaded with 9 cwt. and descends in 30 seconds, the steam being turned on and off by the engineman; the men at the hoist make signals when they want the hoist to ascend or descend, and it begins to move immediately, with scarcely any perceptible loss of time.

5008.

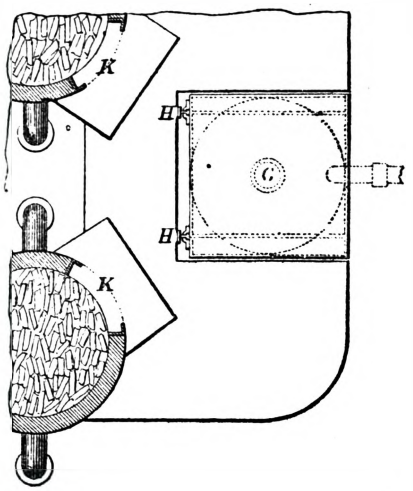

5009.

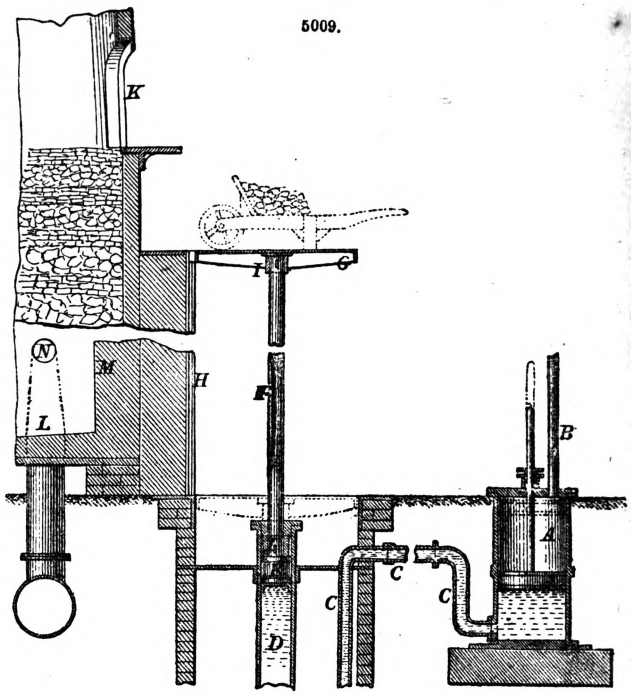

The hoist was originally calculated to lift 10 cwt. at a time, the pressure of the steam being 40 lbs. the sq. in., and the diameter of the ram E 8 in., making the total pressure upon it 18 cwt., but it can take up conveniently only 9 cwt., and the weight of the platform, piston-rod, and ram being about 3 cwt., there remain 6 cwt. or about 30 per cent., of which just so much is lost in friction as leaves an effective pressure sufficient to set the hoist in motion at the required speed.

Fernie made several experiments to ascertain the consumption of coal required to work the hoist, and has found that 1 cwt. a day, in addition to the usual quantity, 6 cwt., used by the engine, is sufficient to lift two 5-ton charges of iron a day.

5010.

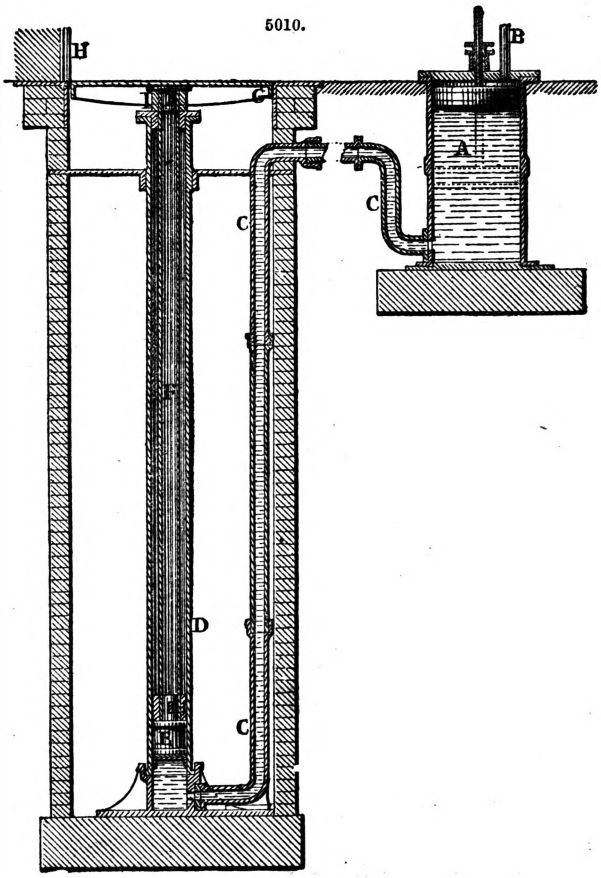

Elevators.—In the United States the name of Grain Elevators is given to certain establishments in which the transshipment of grain is carried on, and in which it is often stored for whole months together. It is weighed when taken in, and again when sent out. The removal of the grain from one spot to another, necessitated by these operations, is almost wholly effected by means of machinery in a very small space, and in a very little time. There are establishments capable of storing from one to one and a half million bushels of corn at once, and these may take in from five to eight thousand bushels an hour, and send out twice that quantity. If it be borne in mind that distinctions of sender, receiver, and owner have to

be kept, it will be seen that the problem solved by the grain elevators is a very complicated one.

At Chicago the grain is brought in wagons and put on board vessels which cross the great Northern lakes. At Buffalo these vessels discharge their cargoes either into the barges of the Erie Canal, or into the trucks of the New York Central or the Erie Railroad. And finally at New York the grain is transferred from the barges or the trucks into large ships for exportation. At Chicago and at Buffalo the establishments are fixed. They are buildings approachable by vessels upon one or two sides, and into which one or two tramways run on a level with the adjoining ground. Bucket elevators raise the grain, moving in an inclined plane and passing through the

5011.

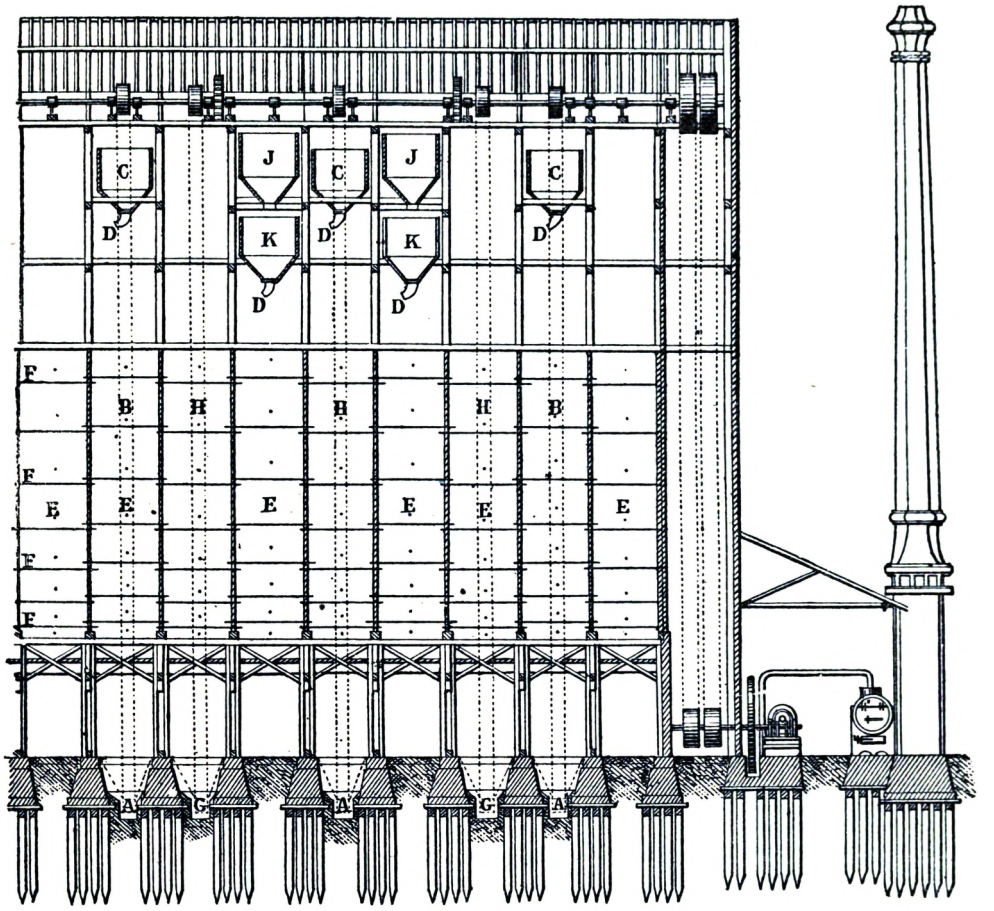

5012.

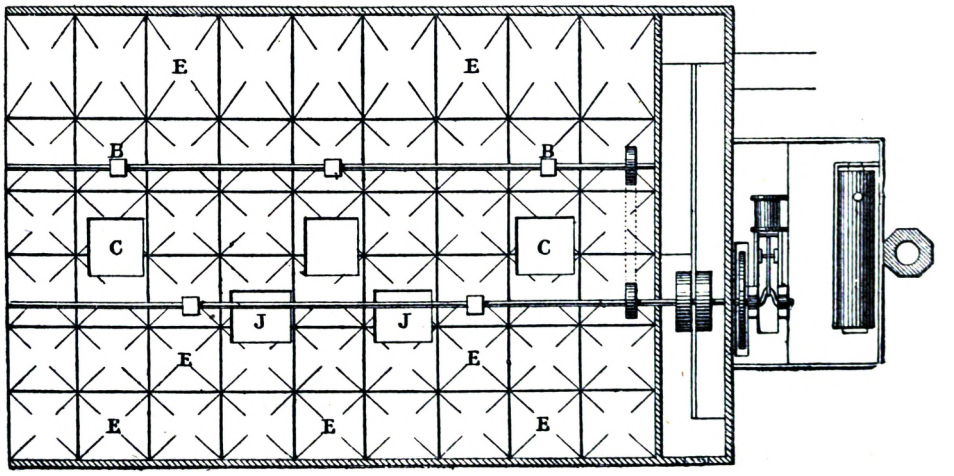

wall if they are intended to work on the outside into a vessel; in a vertical plane if they are intended to dip into pits into which the grain is shot from the trucks. In order to weight it, it is stopped at the beginning of its downward motion in a weighing hopper resting upon a balance. To clean it, it is let fall from the top of a cylinder 15 or 20 ft. in length, up which a strong current of air is driven by a fan. The grain is stored in compartments or bins 10 ft. square and 50 to 65 ft. deep. The bottoms of these bins, which are placed together like the squares of a draught-board, are 12 or 15 ft. above the ground. These bottoms are of the form of a mill-hopper, like those of the various receiving, weighing, and discharging hoppers, in order that the grain may run out of its own accord through an orifice of limited section. A small annexe to the principal building contains the engine and boiler. The motion is transmitted to one or two horizontal shafts in the upper part of the building, often at a height of 100 ft. These shafts drive the elevators.

5013.

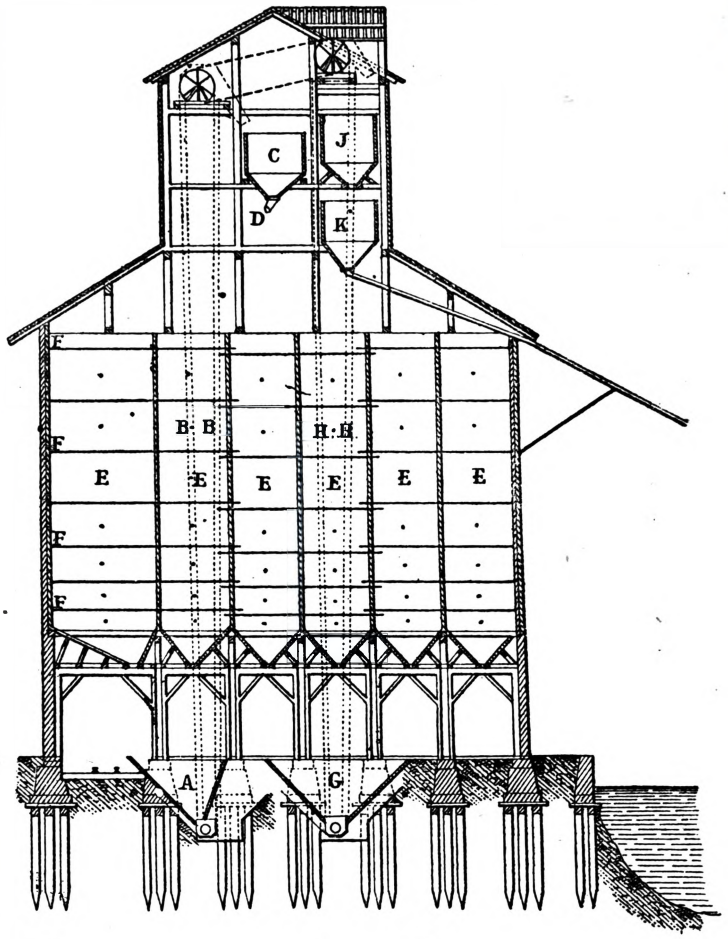

Such are the general arrangements. We will add a few details concerning the elevators of Chicago, Buffalo, and New York. Figs. 5011 to 5014 represent the plan, longitudinal and cross sections, and the detailed plan of bins for one of these establishments. A A are receiving wells; B B, receiving elevators; C C, receiving hoppers; D D, spouts; E E, bins; F F, iron bin-rods; G G, discharging wells, H H, shipping elevators; J J, shipping garners; K K, weighing hoppers. The building is 210 ft. long by 75 broad, and extends to the river's bank. A tramway enters on the opposite side. There are 108 bins, capable of containing altogether nearly half a million bushels. These bins rest upon piles at a distance of 15 ft. from the ground, and reach up to the level of the eaves. Above the roof and along the middle of the building is a wooden structure 36 ft. in breadth, in which the hoppers and the horizontal shafts are placed. The double rows of elevators, in this case all vertical, ascend to the top. Before reaching the store-bins the grain is raised by the receiving elevators up to the receiving hoppers, from which it descends through the medium of weighing balances. When it has to be sent out, the grain is let down into a second row of drawing pits, from which it is taken up by the second series of elevators into other hoppers called shipping hoppers; from these it runs into the vessel through spouts passing through the wall.

5014.

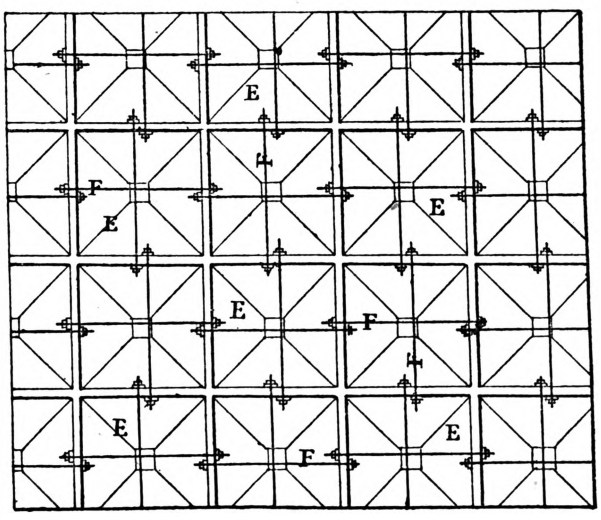

At another of these establishments at Chicago there are two tramways running along the front of the building, and two others entering it. The total capacity of the bins is a million and a half bushels. It takes about an hour to load a vessel of 300 tons. The steam-engine is of 200 horse-power.

At Buffalo, which seems to be above all others the place for grain elevators, there are from fifteen to twenty of these establishments. Figs. 5015 to 5019 represent some of the details of one of these belonging to the Niagara Company. A A′ is the elevator for raising grain from the lake boats;

5015.

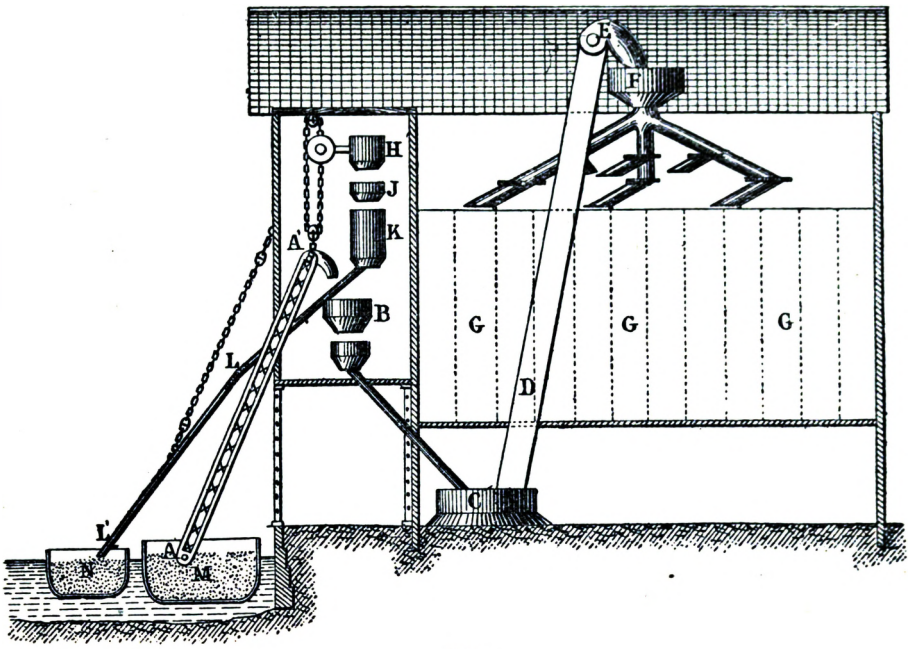

5016.

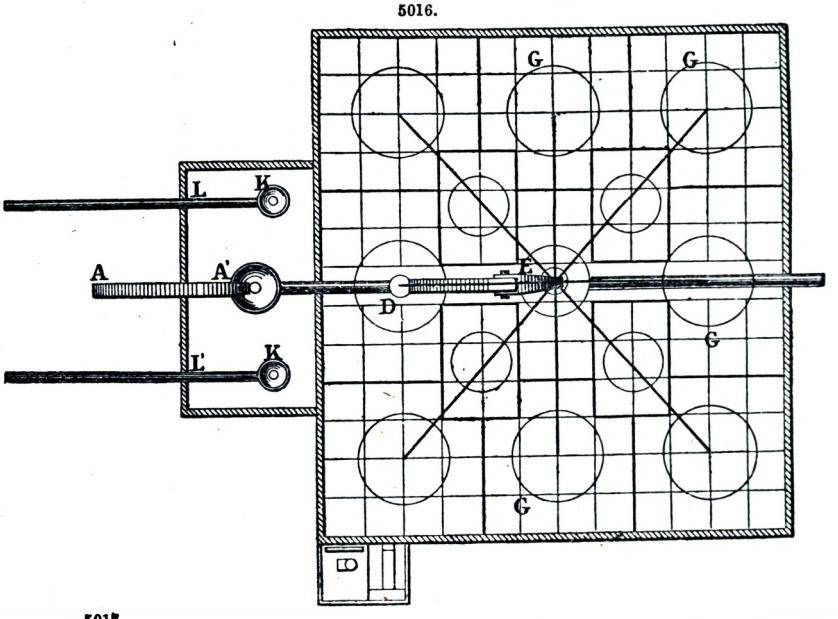

5017.

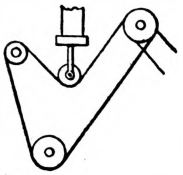

5018.

5019.

B, receiving and weighing hoppers; C, interior wells; D E, receiving elevator; F, distributing reservoir; G G, bins; H, bolter; J, weighing machine for grain to be reshipped; K, shipping garners; L L′, shipping spouts; M, lake boat; N, canal boat. Figs. 5018, 5019, are details of the elevator. All the appliances for unloading, weighing, cleansing, and reloading are here

collected into a tower which is erected on the brink of the river. The main building, which is devoted to storage purposes, is 130 ft. square, the height being equal to the other dimensions. This arrangement requires a horizontal transport of the grain. The appliance by which this is effected is an endless belt consisting of a broad band of stout canvas sewn to two bands of india-rubber, which rest upon two rows of friction-rollers. The grain lodges in a longitudinal depression of the canvas. The unloading elevator is 75 ft. long. The frame which gives it the necessary rigidity is suspended from the woodwork of the roof by its upper end, and sinks with the load in the vessel. This displacement of the upper drum causing the distance between it and the driving shaft to vary, there is some difficulty in transmitting the motion. This difficulty has been overcome in the following manner;—The belt connecting the two does not go directly from one to the other; the under portion of the belt, Fig. 5017, passes under a fixed pulley, and the upper portion under a movable friction-roller, which rests its whole weight upon it, being held up by a block moving between vertical slides. The speed of the elevator is about 450 ft. a minute. The sheet-iron funnel in which the grain is received before passing up into the weighing hopper is closed at the bottom by a horizontal slide moving upon small friction-rollers, so that it may slide easily notwithstanding the load upon it. The weighing hopper forms another funnel simply closed by a hinged flap or hatch moved by a handle. Usually a hundred bushels are weighed at once.

Before reaching the bins, the grain falls upon the top of a kind of tower, from which eight tubes radiate, inclined at 30°. To the lower end of these tubes are fixed others, inclined to the same degree, and capable of being turned about the first as about a vertical axis. By means of these pipes all the bins may be readily filled.

The height of the bins varies from 52 to 72 ft. Their capacity is about 4800 bushels, and collectively they are capable of containing 800,000 bushels. The partitions which separate them are formed of planks placed one upon another, the breadth being 10 in. at the bottom and 15 in. at the top.

The belt, or, as it is called, the conveyer, by which the horizontal transport is effected, moves with a velocity of 200 ft. a minute. In order to discharge its load upon any point in its course, the horizontal direction of the upper portion of the band is broken by means of two pulleys, between which is placed the hopper of a discharge shoot. These three pieces one above the other are mounted upon the same frame or bed, which, supported upon two axles, runs upon a little tramway in the space which separates vertically the two portions of the band, on a level with the floor of the basement story, upon a floor laid over with cement. Another travelling frame carries a system of pipes by means of which the grain from any one of the bins may be brought upon the conveyer. Thus one horizontal conveyer is sufficient for five rows of bins. The vertical elevator which takes the grain up again is 140 ft. in height.

When the grain has to be loaded into trucks it is not necessary to raise it as in the case of loading into vessels. The trucks are merely run under spouts in connection with the conveyer. They are then weighed by running them on to a weighing machine.

The establishment is capable of raising 7000 bushels an hour from a vessel, and at the same time discharge into barges 14,000 bushels, without reckoning that which may be loaded into railway trucks or into special vehicles.

It may be mentioned that the walls of most American grain elevators are composed of planks of wood laid one upon another, in successive courses, decreasing in width towards the roof. In cases where the bins have been constructed of iron, the riveted joints have been torn asunder by the wedge-like action of the falling grain.

The elevators of New York are much more simple, because the cleansing of the grain has been effected at Buffalo, and the barges may retain their cargoes for some time. Occupying, consequently, less space, and transferring the cargoes from one boat to another, the establishment itself may be afloat, as in Fig. 5020. In such cases it is taken to the most convenient part of the bay, or of the two rivers which flow by New York, Brooklyn, and Jersey City. The floating elevator is naturally placed between the barge and the ship. A bucket elevator raises from one what is to be transferred by means of spouts to the other.

5020.

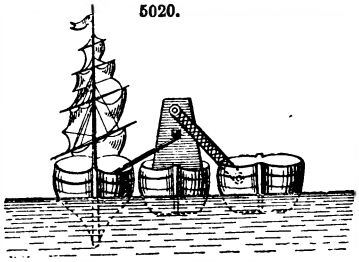

The following description of the method, proposed by Colonel Henry Flad, for raising the arches of the bridge of St. Louis is a subject that may be properly introduced here, while considering the nature of various appliances for raising heavy weights.

The great span of the arches of the bridge of St. Louis (524 ft.), the importance of the navigation, which could only be interrupted in one of the three bays at once, and the nature of the bed of the river, the floods of which would inevitably carry away the supports of scaffolding erected in the space between the piers and the abutments, combined to render the work of getting up the segments of the arches one of extreme difficulty. The method employed at the bridges of Fribourg, Argenteuil, and other places, was not applicable here, ingenious as the method was. Nor were the appliances adopted by R. Stephenson for the erection of the tubular bridge over the Menai Straits more suitable. The following is the method that was to be employed as described at the time by Flad;—

"Upon the two piers and abutments two towers will be constructed of timber, and upon these towers will be laid strong wire cables, which will enable a traveller to run from one end to the other, carrying either workmen or portions of tubes. Suppose now the arch made up of six symmetrical portions, the sketch is easily made, A B, B C, C D; D′ C′, C′ B′, B′ A′. The portion A B will be placed upon the abutment, and the end B supported by a cable passing over the tower and fixed behind. The two portions abutting on the next pier will be placed in the same manner, and, by means of the similar cable, will balance each other. Then the portion B C will be lowered,

resting its lower end on B, the other end C being supported by a cable passing over the top of a king-post B o and fixed at A. The same will be done for B′ C′. When this is done, the middle portions C D, C′ D′, will be let down, which will have to be fitted at C and C′ with the former. The fitting together of these will require the ends C and C′ of the segments already placed to be moved tentatively up or down; but how is this delicate problem to be practically solved? The gable b, instead of resting at the top of the tower upon an oscillating sector or upon a roller, will rest upon the rounded head of the ram of an hydraulic press. In this way the levels may be varied by insensible degrees. And to render the equilibrium independent of the variations of temperature, the cylinder of the press will be made to communicate with a small vertical tube, the piston of which will support a plate suitably loaded."

LIGHTS, BUOYS, AND BEACONS.

The rocks, sands, and other obstructions along a sea-coast render it necessary that certain constructions should be used to warn mariners, both by night and by day, of their dangerous proximity. Such constructions are called lights, buoys, or beacons, the most important being lights or lighthouses, which are buildings generally carried up in the form of a tower, either along the sea-coast as landmarks, or upon dangerous rocks. Lights of various descriptions are introduced upon the top of the tower at night, and a balcony usually runs round the lantern on the outside. Lighthouses of a similar kind are frequently erected at the extremity of one of the arms forming the entrance to a harbour, for the purpose of guiding vessels in and out during the night; these are usually called *harbour lights*. The Eddystone Lighthouse, built by Smeaton, is very celebrated; it presents a fine specimen of scientific construction, and has been taken as a model from the time of its construction up to the present.

The details of a series of arrangements for lighting the rocky coast off the Land's End, England, were incidentally described in a paper upon the Wolf Rock Lighthouse, read by Jas. N. Douglass before the Inst. C. E., in 1870, from which we have taken the following;—

In consequence of applications from the foreign and coasting trades navigating the English and St. George's Channels for lights and beacons to mark the dangers of the coast near the Land's End, a lighthouse on the Longships Rock, Fig. 5021, and beacons on the Wolf and Rundlestone were

5021.

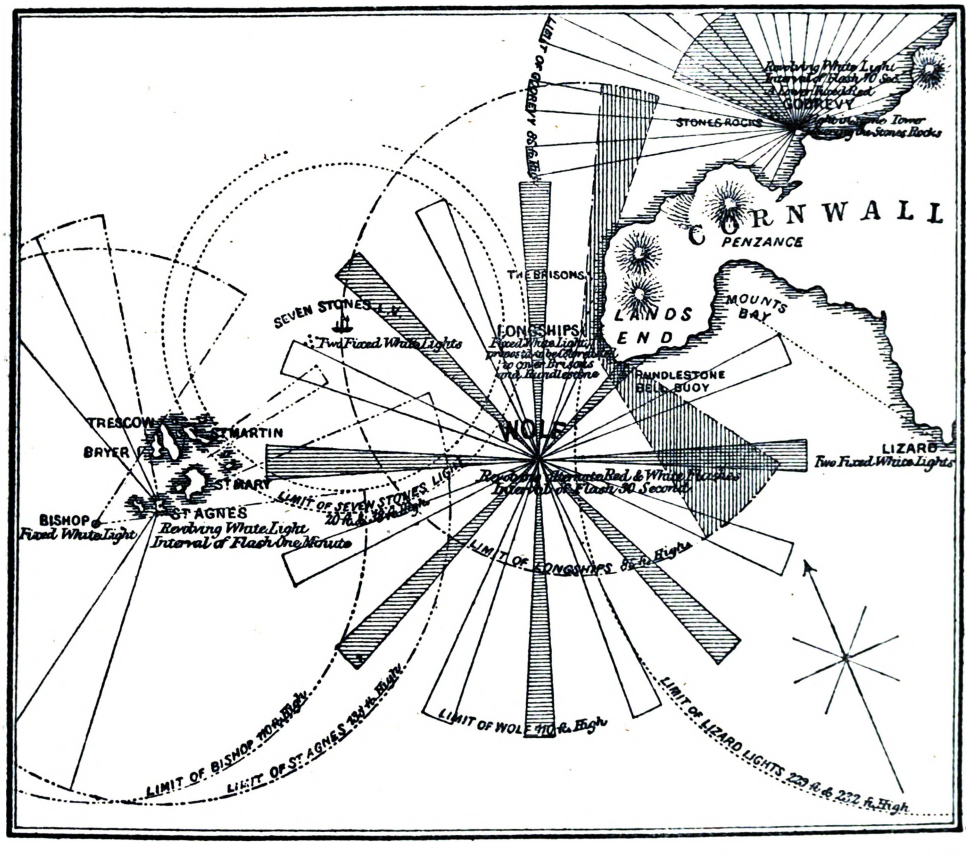

erected in 1795. In the year 1841 a light-vessel was moored off the Sevenstones Rocks, nearly midway between the Land's End and Scilly, in 40 fathoms of water. These were all works of considerable difficulty, for the group of rocks included under the name of Longships, lie about 1 mile westward of the Land's End, and 7¾ miles N.E. from the Wolf, and are composed partly of killas or clay-slate and partly of granite; the division running through the eastern part of the light-house rock, in a north-easterly and south-westerly direction. The Longships Lighthouse is a granite structure, from which is exhibited a catoptric fixed light, and it has rendered good service to the mariner; but owing to the terrific seas to which it is exposed, the lantern, with its centre at an eleva-

tion of 79 ft. above high water of spring tides, was so much under water during stormy weather, that the character of the light could not be determined with certainty. It was not considered safe to raise the tower to a sufficient height to render the lantern free from the heaviest seas; and it was therefore necessary to erect in its stead a granite column 110 ft. high, surmounted by a First Order dioptric light, and which was commenced in 1869. The apparatus to be installed therein will admit of an arrangement being carried out for marking by sections of red light the dangers of the Rundlestone Rock and its surrounding shoals to the southward, and the Brissons Rocks to the northward. The Rundlestone, Fig. 5021, lies S. by E. ¾ E., at a distance of 4 miles from the Longships, and is ¾ of a mile from the shore. It is about 17 ft. 9 in. in length, 8 ft. 9 in. in breadth at the level of low water of spring tides, and the highest part is 8 ft. 3 in. above the same level; but the only available space for the base of a beacon is a portion of the top of the rock, 4 ft. 4 in. long by 4 ft. broad, at a level of 7 ft. above low-water spring tides. The rock, composed of hard grey granite, forms part of a dangerous group of shoals, and is the only portion visible above low water of spring tides. The beacons, referred to as having been erected on the Wolf and the Rundlestone Rocks in 1795, were merely bare poles of wrought iron, about 4 in. in diameter, sunk into the rock, and run in with lead. That on the Wolf was about 20 ft. in height, and was supported by six wrought-iron stays. The beacon on the Rundlestone was not so high, as stays could not be used, owing to the small size of the rock, Fig. 5023. Both of these were soon carried away by the sea. In addition to the beacon on the Rundlestone, the position of the rock was indicated by day by two marks of rubble masonry, erected on the land, at a distance of 1 mile. These are 220½ ft. apart, and when brought in line they lead over the centre of the rock. The second beacon placed on the Rundlestone, Fig. 5022, was designed by Jas. Walker, and was erected during the years 1841-3. The work was one of great difficulty and danger to those employed, owing to the small dimensions of the rock, and the difficulty of landing, which could only be accomplished at spring tides; and then the sea was seldom smooth enough to admit of a footing on the rock, as a strong tide runs to the westward during the whole of the time that the summit is uncovered. This beacon, after having been several times damaged, and twice swept away, was eventually replaced by a bell buoy, Fig. 5024, designed by J. N. Douglass. The bell, weighing 3 cwt., is fixed on a wrought-iron stand attached to the deck, and is rung by four long pendulum-clappers, which are V-shaped, and thus have two points of suspension, rendering unnecessary the use of the ordinary guides. The length of swing is limited by india-rubber buffers, attached to the iron plate surrounding the superstructure, and on which the name of the station is painted. The buoy is constructed with a central water-tight compartment, large enough to float it, in the event of a vessel fouling and driving in the outer plating. A second water-tight compartment is formed at the bottom, which is used for water-ballast in cases where the buoy may be required to be placed in shallow water. The weight of the buoy complete is 65 cwt. That at the Rundlestone is moored with 32 fathoms of long-link mooring chain and a 24-cwt. sinker; 16 fathoms of the chain at the lower end is of 1½-in. iron, and the remainder, or upper part, of 1-in. It is moored in 16 fathoms of water, S.W. ½ W. from the rock, at a distance of 1½ cable, on a rocky bottom and in a strong tideway. It is found to ride well, and to ring efficiently in all states of the weather.

5022.

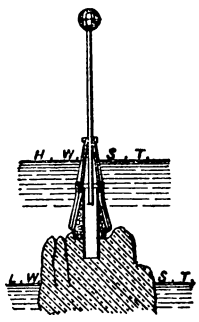

5023.

5024.

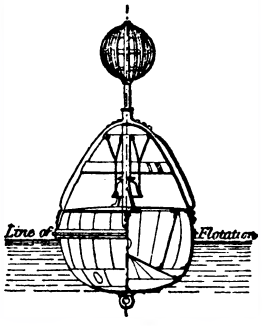

The Wolf Rock, shown in plan and section, Figs. 5025 to 5027, is situated in latitude 49° 56′ 41″ N. and longitude 5° 48′ 30″ W. From it the Lizard lighthouses bear E.S.E. 23 miles; St. Agnes Lighthouse, Scilly, W. by N. ½ N. 20¾ miles; Longships Lighthouse, N.E. ⅛ N. 7¾ miles. The rock is composed of a hard, dark, felspathic porphyry; its highest part 17 ft. above low water of spring tides, which rise 19 ft. The surface is rugged, rendering a landing upon it at all times difficult. The depth of the water close to the rock is about 20 fathoms on all sides, except the S.E., where a shoal extends for a considerable distance, having only 4½ fathoms to 5 fathoms on it at low water at a distance of a cable's length from the Wolf. At a distance of 1 mile from the rock the depth of water on this reef is about 14 fathoms, but in every other direction it is not less than 34 fathoms.

Between the periods of high water and the following low water, the tidal stream runs south-easterly, southerly, and south-westerly; whereas, from low water to the succeeding high water it sets north-westerly, northerly, and north-easterly. This peculiarity is supposed to extend to a radius of 4 leagues from the rock. Situated as the Wolf Rock is, in deep water, and exposed to the full force of the Atlantic Ocean, a terrific sea falls upon it, as may easily be surmised.

The iron beacon, Fig. 5028, was erected on the Wolf during the years 1836 to 1840.

The difficulties of the undertaking were so great, that during the five years the workmen were only able to work 30¼ working days of ten hours each. The mast, which was of selected English oak, 12 in. in diameter, was carried away as early as November of the last-mentioned year. Immediate steps were taken for replacing it by one of wrought iron, 7⅝ in. in diameter, Fig. 5029; but no opportunity occurred for effecting its erection during the following summer. It was, however, carried out in August, 1842. This mast was bent during the succeeding winter about 3 ft. from the perpendicular, the bend being in the direction of the heaviest seas, namely, from the westward to the eastward. During a storm in October, 1844, the mast was again broken off, at

about 4 ft. above the top of the cone. In July of the following year a second iron mast was fixed, Fig. 5030. In this case the mast was increased to 9 in. in diameter, and the globe was reduced to

5025.

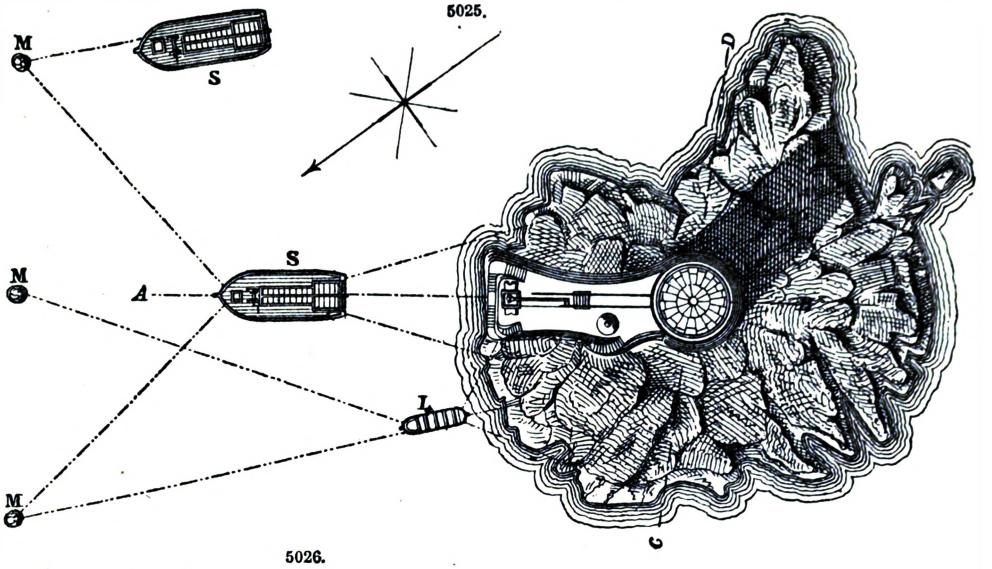

5026.

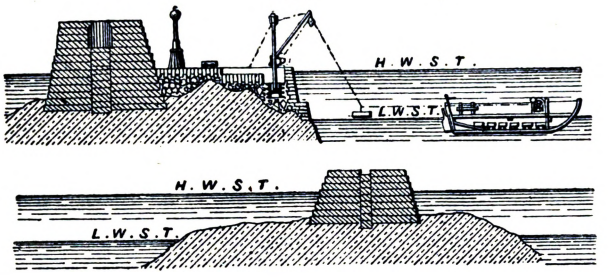

5027.

5030. 5029. 5028.

4 ft. in diameter. This mast stood until the early part of 1848, when it was carried away. In August, 1850, another wrought-iron mast, Figs. 5031, 5032, was fixed. It was 9 in. in diameter at the lower part, and had a globe only 3 ft. in diameter. This mast withstood the force of the sea until it was taken down during the progress of the construction of the present lighthouse. The ironwork of the beacon, after an exposure of thirty years to the corrosive action of sea-water, is in a good state of preservation, having been protected by a coat of red-lead paint, renewed annually. Some of the internal cement rubble filling was removed for the purpose of affording space for the stowage of the workmen's tools during the erection of the lighthouse, when the threads of the screw-stays that were imbedded in the cement were found to be as perfect as when first made.

5031. 5032.

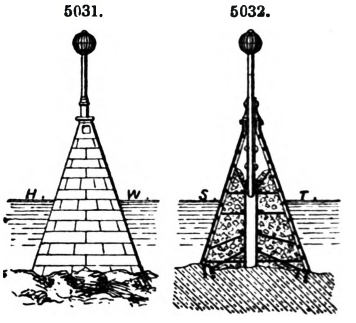

The craft employed at the Wolf Lighthouse were a steam-tug of 60 horse-power, and five barges, each of 40 tons burden, for the conveyance of the stone and other material from the yard to the work. In addition to these, a schooner of 100 tons register was built, and specially fitted for service as a barrack for the workmen when afloat. Special moorings were laid down for these vessels near the workyard at Penzance, 17 miles distant, and a timber jetty was erected for loading and unloading them.

The Wolf Rock Lighthouse was designed by Jas. Walker, and the erection entrusted first to Jas. N. Douglass, and afterwards to W. Douglass. The exact height of the tower is 116 ft. 4¾ in., its diameter at the base 41 ft. 8 in., and near the top, at the springing of the curve of the cavetto under the lantern gallery, the diameter is 17 ft. For a height of 39 ft. 4½ in. from the base the work is solid, with the exception of a space forming a tank for fresh water. At the level of the entrance door the walls are 7 ft. 9½ in. thick, whence they gradually decrease throughout the whole height of the shaft to 2 ft. 3 in. at the thinnest part near the top. The shaft of the tower is a concave elliptic frustum, the generating curve of which has a major axis of 236 ft., and a minor axis of 40 ft. It contains 44,506 cub. ft. of granite, weighing about 3296¾ tons; and its centre of gravity is 36 ft. 2¼ in. above the base. In consideration of the exposed position of the work, it was determined to dovetail each face-stone vertically and horizontally. This method of dovetailing,

Figs. 5033 to 5035, consists in having a raised dovetail band, 3 in. in height, on the top bed, and one end joint of each stone. A corresponding dovetailed recess is cut in the bottom bed and end-joint of the adjoining stones, with just sufficient clearance for the raised band to enter it freely in setting. From experiments made upon blocks of granite put together in this manner with Portland cement, it is found that the work is so homogeneous as to be as nearly as possible equal in strength to solid granite. This system of dovetailing also affords great protection to both horizontal and vertical joints against the wash of the sea when the work is first set. In addition to the security afforded by the dovetailing, each stone of the first and second courses of masonry is secured to the rock by two yellow metal bolts, 2 in. in diameter, each bolt being sunk 12 in. into the rock, and fox-wedged at each end; a portion of the hole at the top and the bottom being made conical for the purpose. From the third to the twentieth courses inclusive, each face-stone is secured to the course below by two yellow metal bolts, Figs. 5037, 5038, 2 in. in diameter, and each internal stone by two bolts of galvanized puddled steel, also 2 in. in diameter. Each bolt in these courses is sunk 9 in. into the course below. All the holes for the bolts were bored on the platform in the work-yard, and so accurately was this executed, that no instance occurred where the lower part of a hole was found to be out of position for properly inserting and wedging up the bolt at the rock. Figs. 5037 to 5043 are plans of the courses, and Fig. 5044 plan of gallery, lantern, and illuminating apparatus at level of service stage. The masonry, to the level of high-water spring tides, was set in fresh Medina Roman cement. All the cement used in the work was mixed with an equal portion of clean, sharp granitic sand, obtained from the stamps refuse of a tin mine. This sand is of excellent quality for such work, every grain in it being hard, angular, and rough. Salt water was used for mixing all the cement required for the landing platform and the solid portion of the tower; above this only fresh water was used.

In spite of the precautions taken for the security of the stones in the lower portion of the building, thirty-four stones of the fifth course, which course it was found impossible to complete at the end of the season of 1865, were carried away during a heavy storm which raged on the 24th and the 25th of November of that year.

The general internal arrangements and fittings are shown on the section of the tower, Fig. 5036. The step-ladders for ascending from floor to floor, and the partitions between the rooms and staircase, are of cast iron, and the use of wood for the fittings has been limited as much as possible, as a precaution in case of fire. The doors, windows, and storm-shutters are constructed of gun-metal. The windows of the watch or service room, immediately under the lantern, are specially arranged for admitting air to the lantern, and for regulating the ventilation in all ordinary weather. The supply of air is admitted by a valve at the upper part of the window, so as to pass above the head of the light-keeper on duty, and upwards through an iron grating surrounding the lantern floor. The lantern is one of the cylindrical helically-framed type, designed by J. N. Douglass, and adopted by the Trinity House.

With the view of giving the Wolf Light a perfectly distinctive character, a revolving dioptric light of the First Order, showing alternate flashes of red and white at half-minute intervals, was resolved upon. This arrangement involved the consideration of the important question, which does not appear to have been previously determined with accuracy, of disposing in each beam the relative proportion of light to allow for the loss in the red beams by passing through a ruby glass medium, and produce at all distances at which the light can be seen, with variable states of the atmosphere, flashes of nearly the same strength. The investigation of the subject was entered into by Professor Tyndall, and from practical tests it was determined that the quantity of light to be appropriated to the red beam should be to that of the white in the ratio of 5275 to 2250, or as 21 to 9 nearly.

The apparatus has sixteen panels of refractors and lower prisms, and eight panels of upper prisms, to the circle. Eight panels of refractors and lower prisms of 18° each are appropriated to eight beams of white light; and eight panels of refractors and lower prisms of 27° each, together with the eight panels of the upper prisms of 45° each, to eight beams of red light. The colour is produced by ruby glass placed in front of the panels, and revolving with the apparatus. The illuminating power of each beam sent from the apparatus is estimated at 2250 French units.

A 5-cwt. fog-bell is fixed on the lantern gallery, Fig. 5036. It is struck by two hammers worked by machinery fixed in the pedestal of the illuminating apparatus, but independent of that for rotating the latter. For the purpose of giving the signal a distinctive character for the station, the machinery is arranged for striking the bell three blows in quick succession at intervals of fifteen seconds.

In consideration of the great difficulty that would be experienced in landing upon the Wolf, which can only be effected on the north-east side, and even there the surface is rugged and without any vertical face for a boat to approach, it was determined to construct a landing platform, Fig. 5025. As the material for this platform could only be landed from boats, small granite ashlar, set in cement, similar to brickwork in old English bond, was adopted. The stones, with the exception of the larger ashlar in the steps and coping, and some rubble-filling obtained from the foundation pit for the tower, are each 24 in. by 12 in., by 6 in. in thickness, rough pick-dressed, and are laid in fresh Medina Roman cement. Frequent tides, which did not ebb low enough to admit of working at the foundation pit for the tower, were worked at this platform; and so rapidly did this portion of the work progress that the platform was nearly completed before the foundation pit was prepared for setting the first stone of the tower. The platform greatly facilitated the erection of the light-house, and will prove of permanent value, from the convenience it affords for landing and embarking at times when it would be impossible to effect this without it. The landing platform contains 14,564 cub. ft. of masonry, making together with the tower a total of 59,070 cub. ft., or about 4375½ tons.

The first survey for the purpose of determining the exact position of the proposed tower was made on the 1st July, 1861. Douglass landed upon the rock, and made the best use he could of the short time which the state of the tide allowed; but the sea getting up meanwhile put a stop to his work; and as a boat could not, from the increased swell, approach the rock with safety, he was hauled on

board through the surf by a line fastened round his waist. This mode of embarking was frequently resorted to afterwards for getting the workmen off the rock, when caught by a sudden change of weather and increase of surf.

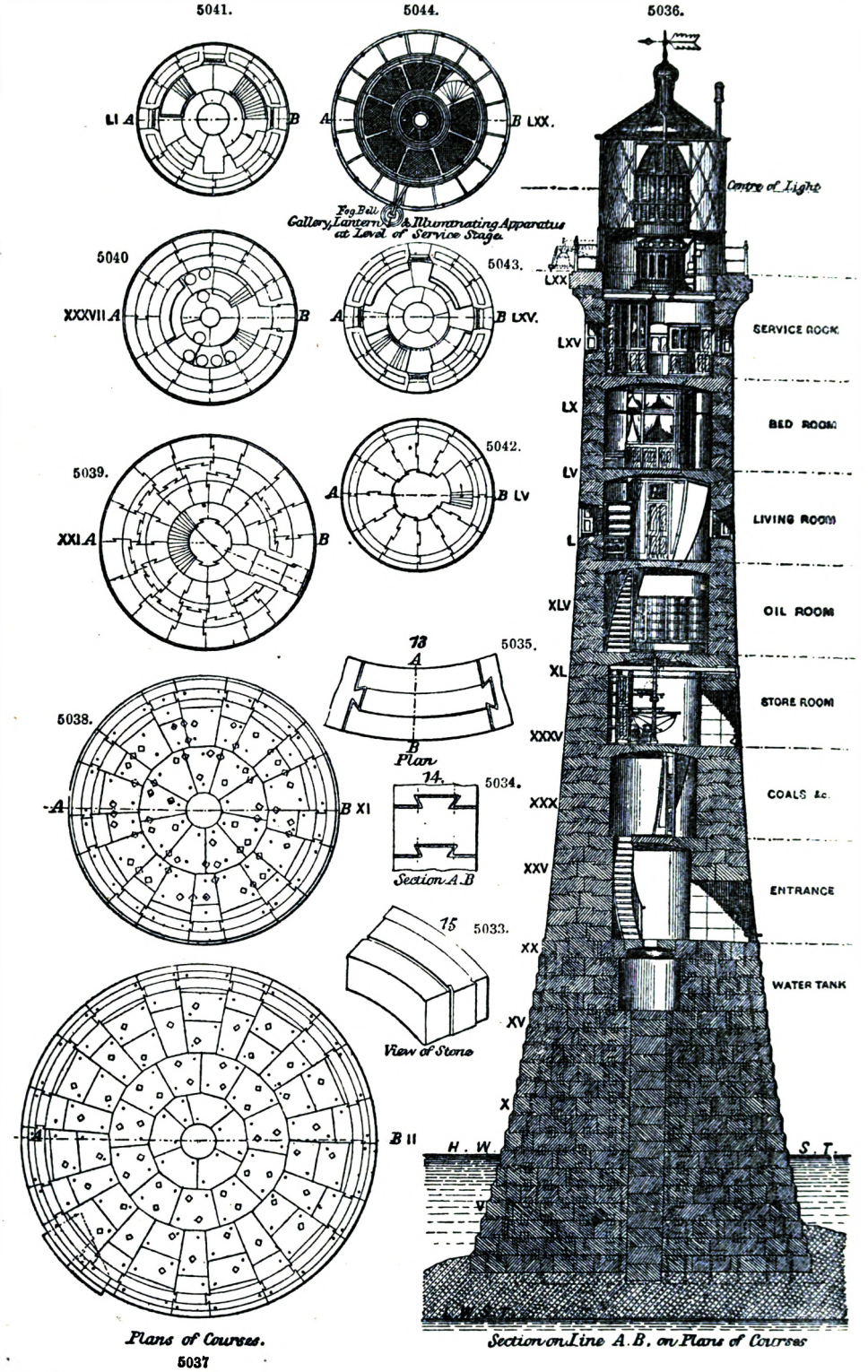

On the 17th March, 1862, the working party got upon the rock, and began to cut out the foundation pit. The insecurity of the foothold, and the constant breaking of surf over it, rendered

great precaution necessary for the safety of the workmen. Heavy iron stanchions were sunk into the rock around the site for the foundation, and each man worked with a safety-rope lying near him, one end of which was attached to the nearest stanchion. An experienced man was always stationed on the summit to look out for the sea, who would give warning of such waves as were likely to sweep the rock, when the men would hold on, head to the sea, while it washed over them; picks, hammers, and jumpers, some exceeding 20 lbs. in weight, were frequently found to have been washed away, when the waves had passed and were followed by a lull.

On the 29th September the last tide of the season was worked. Only twenty-two landings had been effected, and eighty-three hours of work obtained on the rock for the season, although not a single opportunity had been lost when it was possible to work even half an hour. The season was altogether a very unfavourable one for such an undertaking. During these eighty-three hours considerable progress was made in blasting and cutting out the foundation pit for the tower, and in the erection of the landing platform.

In 1863 the first landing was effected on the 20th February, and the last on the 24th October. During the season thirty-nine landings were effected, and the work on the rock was proceeded with during 206½ hours. At its close the cutting of the foundation pit and the erection of the landing platform were about half executed, and the dressing of the sixth course of masonry in the workyard was completed.

The first landing for 1864 was effected on the 9th April, and the last on the 5th November. During this year forty-two landings were effected, and 267 hours' work obtained on the rock. On the 6th August the first stone of the tower was set. At the close of the season thirty-seven stones of the first entire course, or second course of the tower, were set; the landing platform was nearly completed, and the dressing of the tenth course was finished in the workyard. The iron derrick landing crane, Figs. 5045, 5046, was erected on the end of the landing platform. It has a solid wrought-iron mast, 10 in. in diameter, fixed in a cast-iron well, into which the machinery, when not in use, is lowered by a rack and pinion, and is there secured by strong wrought-iron hinged covers. The wrought-iron derrick, when not in use, is lowered into the long protecting chamber, and is secured therein with strong iron covers.

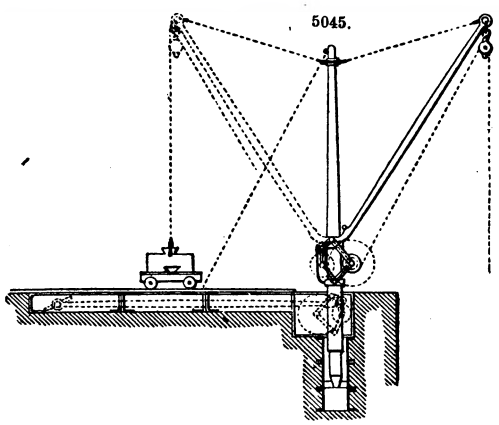
5045.

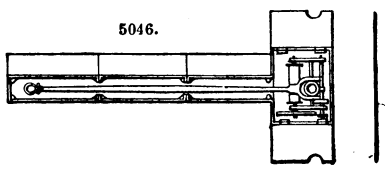
5046.

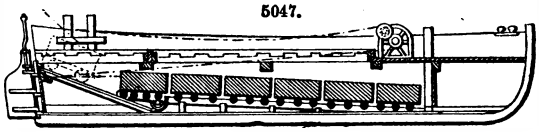
5047.

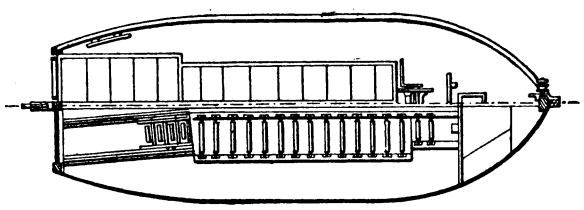
5048.

In Figs. 5047, 5048, the upper and lower deck plans and a longitudinal section of one of the stone barges are given. The lower hold of these barges is fitted with elm rollers, running on iron gudgeons, on which the stones were stowed, in the order in which they were wanted for the work. Each stone, as required to be landed, was rolled on to one of the trucks at the stern of the barge, and drawn up to the level of the deck by a chain led from the winch on the deck; the chain from the landing crane was then shackled to the lewis fixed in the stone; the single block of a strong rope veering tackle was also attached to the lewis as shown; one end of this tackle was secured to one of the windlass bitts, and the other end to a brake-barrel on the winch. As the chain of the landing crane drew the stone from the truck over the roller at the stern of the barge, with the heave of the vessel, the veering tackle was eased away by the brake, and the tackle kept just sufficiently taut to prevent the stone being driven by the sea against the rock. Blocks of stone have frequently been landed without damage in this manner, with a rise and fall of wave of 12 ft.

The relative positions of the mooring buoys, barges, and landing boat, when engaged at the rock, are shown Fig. 5025, where S S indicate stone barges, L landing barge, and M M spherical mooring buoys. Each barge, when at the landing crane, was moored, stem and stern, with 10-in. coir-hawsers; and the stern hawsers even of this size, which being shorter than those at each bow had not so much to give and take, were frequently parted. The barrack schooner, for the accommodation of the resident engineer, his assistants and working party, was moored E.N.E. from the rock, at a distance of ¾ mile, and remained there as

long as there was an opportunity of doing any work. When this was no longer possible, and there was no immediate prospect of better weather, the moorings were slipped, and the vessel was taken to Penzance, there to await another opportunity.

Fig. 5049 shows the arrangement of the lifting and setting gear, and the progress of the work during the first five years.

Figs. 5050 to 5053 are a perspective view, with plan and sections of the landing boat used for the work. This boat is built diagonally, of two $\frac{3}{8}$-in. thicknesses of elm plank, without timbers or floors, and is provided with a landing-deck and mast forward. The deck and gunwale forward are covered with rough rope-matting, for the purpose of affording a good foothold in jumping from or into the boat. Each workman was provided with a cork life-belt, which he was compelled to wear while landing on or embarking from the rock; and it was frequently necessary, for the safety of the men, that they should wear these belts during the whole of the time that they were engaged upon the rock.

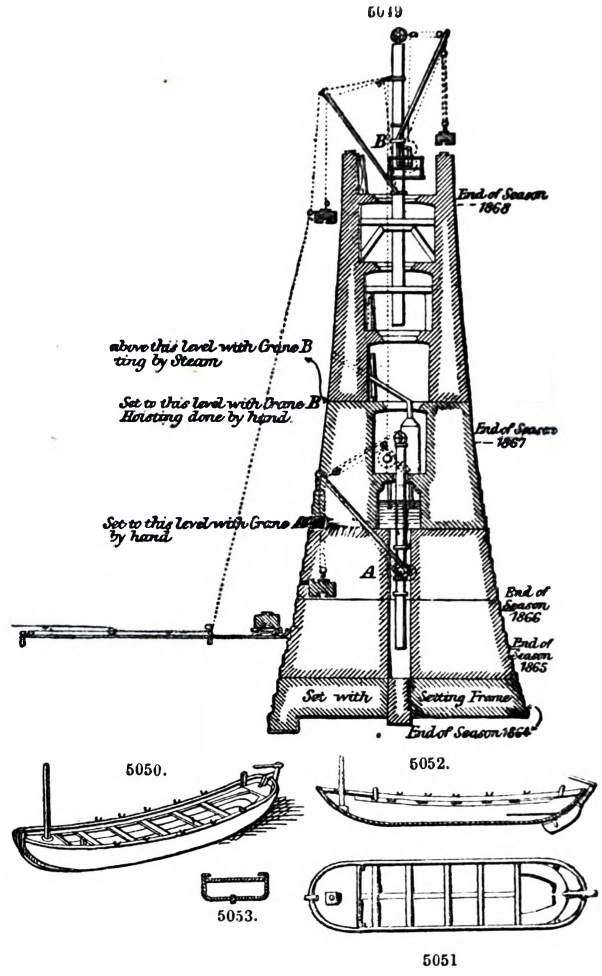

The moorings laid near the rock for the vessels were as follows;—Those for the sailing barrack-vessel were laid about $\frac{3}{4}$ mile E.N.E. from the rock, in a depth of 36 fathoms, on a bottom composed of coarse sand and shells. The moorings consisted of a 30-cwt. mushroom anchor, 90 fathoms of $1\frac{1}{8}$-in. chain, with a swivel and riveted shackle at every 15 fathoms, and an iron spherical mooring buoy, $5\frac{1}{2}$ ft. in diameter. As it was necessary that the vessel should be securely attached to the mooring, and yet be free to slip from it readily under canvas, in such a manner as to avoid drifting on the rock, the following method was adopted;—A piece of chain, of the same size as the mooring chain, and about 3 fathoms in length, was shackled to the mooring chain at 3 fathoms from the buoy. To the upper end of this chain was shackled about the same length of $\frac{1}{2}$-in. chain, and the end was carefully stopped to a mooring ring at the crown of the buoy. In mooring the vessel, the end of the small chain was detached from the buoy, and was passed over an iron roller at the bow, and twice round the windlass. The end of the mooring chain, when hove in, was stopped to a strong eye-bolt in the deck abaft the windlass; the end of the small chain was then passed back over the windlass and roller at the bow, and secured in the same manner as before to the buoy, which was hoisted on to the bow of the vessel and there lashed. When it was necessary to slip from the moorings, the buoy was first thrown overboard, and then the chain was slipped from the windlass, the whole operation being easily performed in one minute.

Each of the three moorings close to the rock, for securing the stone barges, was laid in about 25 fathoms water; each mooring consisted of two 24-cwt. cast-iron sinkers, 30 fathoms of $1\frac{1}{4}$-in. ground chain, and 15 fathoms of 1-in. upper chain, to which was shackled a $5\frac{1}{2}$-ft. iron spherical mooring buoy, with a strong mooring eye at the crown, to which the craft was secured. These moorings, laid on a rough, rocky bottom, in a strong tideway, and with a continuous swell, were subject to great wear, especially the portion on the ground. They were usually laid between the latter part of February and the early part of March of each season, and were taken up between the latter part of October and the early part of November. It was generally found that the iron in the chain was reduced in diameter during the above period nearly as follows, namely, from the buoy to 20 fathoms, $\frac{3}{32}$ of an inch; this portion of the chain, where the links were not in contact, being coated with short seaweed and crustacea. From 20 fathoms to 30 fathoms the chain was quite bright, and nearly uniformly reduced in diameter $\frac{1}{4}$ in. From 30 fathoms to the sinkers, 45 fathoms, the chain was rather bright, and reduced about $\frac{1}{8}$ of an inch. No shackle, even with its pin well riveted in when hot, could be trusted in the part of the chain where the greatest wear occurred; the incessant hammering on the rock soon loosened the pin, and rendered it unsafe. All the mooring chains used were long linked, and without studs. Each mooring was lifted and carefully examined once or twice during the season as opportunity offered; and when taken up at the end of each season, they were thoroughly overhauled, and the worn parts cut out and replaced by new.

The work steadily progressed year by year, until on the 19th of July, 1869, the last stone was laid.

Maplin Sand Lighthouse.—The mouth of the river Thames is intersected by numerous sandbanks at its junction with the ocean, and upon one of these banks is erected the Maplin Lighthouse. The channel to the south of the Maplin Sands was formerly marked by a floating light. In light-vessels a lantern encircles and slides upon a short mast, and is raised or lowered by a crab and chain; these vessels are rendered more conspicuous during the day by being painted of a bright red colour, and a globe about 6 ft. in diameter formed of thin wooden ribs connected together by belts of the same material, is placed at the top of the mast.

The establishment in these vessels consists of six or seven men, who are relieved every two months. The light-vessels afford a good light by night, and are floating beacons by day; but are liable to drift from their moorings, or to suffer damage from vessels running foul of them, as they are generally in the fairway of the channel. In the event of their breaking from their moorings, serious calamities are liable to occur to shipping; and this having occurred with the light-vessel at the Maplin, means were taken to erect a small permanent iron lighthouse, and from J. B. Redman's paper on the subject in Trans. Inst. C. E., 1848, we learn that Mitchell's system of screw-piles was used for the foundations.

One pile was placed at each point of an octagon, with one in the centre, and they were screwed down into the sand in the following manner;—A raft, about 30 ft. square, had been previously prepared, with a longitudinal opening from one side to the centre for the admission of the pile; this was towed over the spot where a pile was to be screwed down, and was held in its proper position by means of warps, the pile being pitched upright, and projecting through the opening left for that purpose; a capstan-head was then keyed on to the pile at the proper level, the bars were introduced, and by manual labour the piles were screwed down, the capstan-head being shifted up as the piles descended, the average work being one pile a day.

The labour required for screwing the piles down varied much, but for the most part the sand appeared to be clean and firm for about the first 8 ft., and then became looser for about 3 ft., the rest being generally uniform.

The piles were screwed down 21 ft. below low water, Fig. 5054, their tops being 5 ft. above

5054.

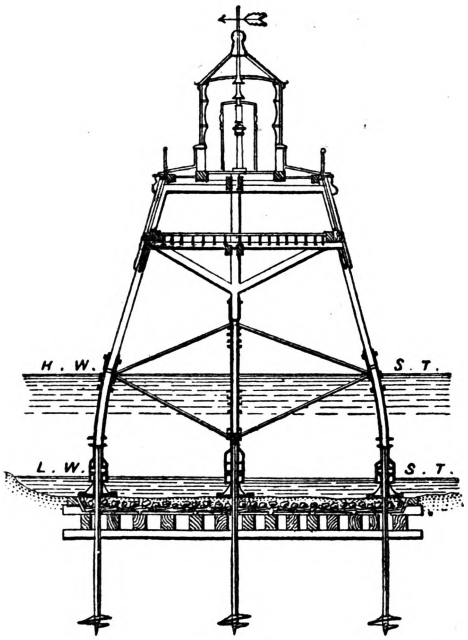

5055.

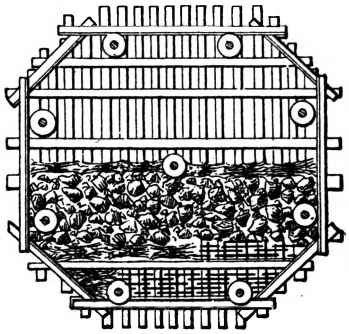

5056.

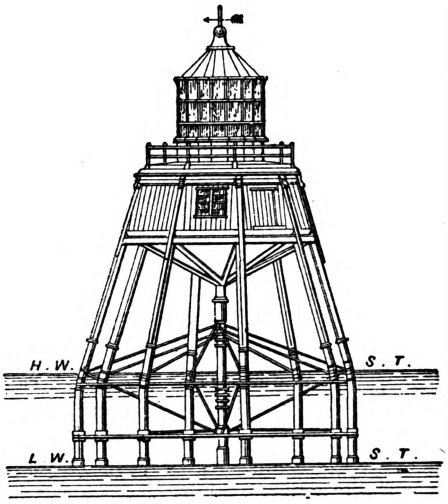

that level, and from 4 ft. to 4 ft. 4 in. above the sand. In a few tides the sand was found to be considerably lower at the S.E., being 6 ft. below the pile-heads, whilst at the northward it had not undergone any change. Whether this deepening arose from the projection of the piles alone is doubtful, as the sand appeared to have decreased at the margin uniformly to the east and west. Still the obstruction of these piles to the current of the stream, though small, appeared to have had some influence; a slight hollow was worn around each pile, similar to what takes place on the sea-shore, around stones lying on the sand.

As the sand shifted so much, it was thought advisable to adopt some precautionary measures, to secure a foundation for the building. A raft, or grating, of timber was accordingly formed, Fig. 5055, towed down, and moored off the sand. The timbers of the raft were so disposed as to

admit the piles freely, and a curb extended all round, for retaining the stones intended to be placed upon it; the surface was covered with bavins, or fagots of small wood, filling the spaces level with the tops of the upper half timbers, and were fixed by means of ropes, interlaced with them and nailed to the timbers. The raft, in this state, was towed over the piles, from the tops of which leading ropes had previously been brought through the corresponding openings between the timbers; this precaution was necessary from the inequality of the sides of the octagon. One hundred and twenty tons of rough Kentish stone were then thrown upon the raft, covering it to an average depth of 15 in., causing it to sink with about two-thirds of this weight, and to ground just before low water.

From the sand having decreased so much previously, particular care was taken to obtain the levels of the raft so as to ascertain in future the amount of settlement and inequalities counteracted by adding to the higher portion an additional quantity of stone.

The ironwork supporting the superstructure, Figs. 5054, 5056, and placed immediately upon the screw-piles, consists of nine hollow cast-iron columns, or pipes, the exterior ones curved at the top to a radius of 21 ft. towards the centre, with projections to support the wrought-iron collars to which the ties are bolted. The columns, at 4 ft. from the bottom, have a stop cast in them to rest upon the piles, and are finished at the top with a socket to receive the timber columns of the superstructure; the centre column is shipped 2 ft. over the centre pile; the columns at each end are strengthened by wrought-iron hoops, put on hot, and suddenly cooled. The ties are of wrought iron, connected to the outer columns by collars with arms, embracing the ends of the ties, which are flattened out; the ties at the centre of the building are finished with projections, forming part of a circular collar, which encloses the centre column; the projecting flanges are bolted together; the braces are arranged so that there should be a tier of horizontal ties between the outer columns, about 10 in. above the pile-heads, and similar ones radiating from the centre column to the north, south, east, and west columns. Four sloping diagonal ties connect the centre column to the north-east, north-west, south-east, and south-west columns, near the level of the upper horizontal ties, and are fixed in the same way as the lower ones. These horizontal ties are attached immediately below the sockets in which the timbers rest, at which level sloping ties connect each of the exterior columns to the upper part of the centre one, which stands 7 ft. above the rest.

The columns of the timber superstructure are stepped into the iron columns, and are well braced together; the tiers of horizontal bracing form the supports for the floors and gallery. The braces are partly supported by oak cleats, screwed to the uprights, to which the half timbers are bolted, and the whole timbers abut against them, being partly let in and secured by wrought-iron gibs, keys, and cleats, and attached at the centre by wrought-iron knees and bolts.

The superstructure is further strengthened by a raking brace being placed at every external column, at the level of the lower floor, and abutting against the centre column, into which four of them are tenoned, and are secured by wrought-iron knees and bolts, the upper ends being bolted to the half timber braces of the lower floor; the lower ends of the remaining raking braces are stepped upon the others, and at the outer ends are fastened to them in a similar manner. Between each of these braces quarters are fixed, and the whole is boarded inside and out, forming the store for coals, water, &c. Both the tiers of horizontal bracing are bounded by curbs, which fit in between the main pillars, and are fastened by wrought-iron knees and through-bolts; the upper curb is level with the tops of the pillars. The joists of both floors are calked on to the horizontal bracing, those of the lower floor being tenoned into the curb.

The lantern base is supported upon a curb, in pieces 8 ft. long, the ends of which are half-lapped, bedded on, and bolted to the upper horizontal braces. The basement, or plinth, consists of sixteen sides, the angles being formed by two quarters, tenoned below into the curb, and at the top into the sill of the lantern, which is of oak, weathered and throated, and the joints dovetailed and half-lapped; the quarters are well braced, and the wrought-iron through-bolts, which hold down the lantern, pass between the quarters at each angle, and are screwed up underneath the lower curb of the basement. The plinth, or basement, is covered with two casings of boarding, an inch thick, the inner casing being placed horizontally, and the outer vertically. The joists of the lantern floor are laid, like those of the lower floor, upon the horizontal bracing and the lower curb of the lantern base; the joists of the lantern gallery rest upon the curb of the lantern plinth, and upon the upper outer curb, radiating nearly from the centre, there being one at each angle, and the whole is covered with boarding, which receives the lead flat.

The sides of the dwelling are covered both on the outside and the inside with boarding; the joints are ploughed and tongued, and each board is strongly nailed to the three tiers of quarters; the outside boarding at the bottom is rebated into an external moulded curb, which is fixed to the outside of the principal curb, and the principal posts, or columns, are rebated for a width of 2 in. at the angles, to receive the boarding; and the faces of the columns are covered with pilasters, or covering boards, rounded on the edges, and reaching about 3 ft. 6 in. below the lower curb, being terminated at the top by brackets, against which the cornice abuts. The gallery and cover boards of the cornice are covered with lead.

The window-frames are supported in a framework, the posts of which receive the quarters of the sides; the window sills are of oak, weathered, and throated in front; the sashes are single, and, like the shutters, slide up and down inside the outer boarding.

The door is on the north-west side, and the quarters of the side are tenoned into the posts, the jamb linings being nailed to these posts; the sill is of oak, throated and weathered, and the head is finished like the jambs. The two leaves of the folding doors are framed and battened with deal 2 in. thick, and when shut they are flush and fair with the outside of the dwelling.

The interior of the dwelling is arranged and partitioned off, so that the sleeping berths are kept distinct from the living room, by having small state rooms and doors in front. The store has bins for tow, provisions, and so on; in it are kept the oil cisterns, and the stairs up to the lantern are enclosed by partitions. The communication with the lower store, in which coals are kept, is by a

trap close to the entrance doorway; the water-closet and water-tanks are likewise placed in this lower store.

Outside of the entrance door is a landing, or platform, from which the ladder descends to the level of the top of the north-west iron column, where it is supported by a cast-iron bracket; on the surface of this ladder, the second length slides upon rollers travelling on wrought-iron plates. This portion of the ladder reaches to near low water, and is raised by means of a rope and barrel, worked by a ratchet-wheel and lever, the rope having balance-weights at the other end, which slide up and down against the face of the pillar. There is also a brake for lowering it; by this contrivance the building can be reached at any time of the tide, as the lower end of the ladder, when let down, reaches sufficiently near to the surface of the water at low tide to enable persons to land on it.

The principal dimensions and scantlings are;—

Ironwork.

Screws	4 ft. diameter
Piles	26 ft. long, 5 in. „
Cast-iron columns (external) and 1½ in. thick.	18 „ 11 in. „
Lower wrought-iron ties	2½ in. „
Upper ditto	2 in. „
Wrought-iron screw-bolts to couplings of ties	¾ in. „

Timber Work.

External columns, 30 ft. long, 12 in. square at the bottom, and 10½ in. at top.	
	in. in.
Half timber horizontal braces	12 × 4½
Upper whole ditto	10 × 10
Lower ditto	11 × 10
Raking braces	10 × 10

Joiners' Work.

Lantern curb	12 × 9
Oak sill to ditto	12 × 6
Oak window sills	12 × 9
Oak door sill	12 × 9
Door posts	6 × 5
Jamb linings to door	2¾ thick
Outside boarding to sides of dwelling	2 „
Inside ditto	1½ „
Pilaster boards	2 „
Boarding to lower store	2 „
Ditto to lead flat	2 „

For the superstructure, the cast-iron bases were first shipped over the pile-heads, dropped upon the stonework of the raft, and solidly bedded; on the tops of these bases were placed concentric rings, forming washers, fitting loosely over the piles, and of various thicknesses, so as to render the bases of one uniform level at the top.

The columns were then all put up, and the wrought-iron work was fitted; a stage was erected on the upper horizontal braces to facilitate the erection of the timber framing, upon which the lantern was placed; the light was a French dioptric light of the Second Order; its centre, 45 ft. above the mean level of the sea, and at this elevation it may be seen from the deck of a ship for a distance of nearly ten miles, Fig. 5056.

A bell is fitted on the gallery, to be sounded at regular intervals in dark and foggy nights, by means of clockwork within the lantern base.

A space of 2 in. was left between the tops of the bases and the lower ends of the columns; so that, in the event of the piles sinking with the weight of the building, after settling 2 in., the structure would rest upon the bases, and through them on the large bearing surface of the raft, amounting to about 1700 sq. ft., being fifteen times the area of the nine screws, the bearing of which is 113 superficial feet, being 12·56 ft. to each pile.

As the water ebbs at times below the tops of the bases, the piles were exposed for a length of 2 in., giving the bases a somewhat weak and unsightly appearance. To obviate this, nine covering irons were cast, the exterior ones being 2 ft. in length, and the centre one 3 ft.; they were each formed of two semicircular pieces, fitting together with lapped joints, and screwed with countersunk screws, having each a projecting flange inside to support them on the bases. The upper part of the bases and the lower ends of the columns were thus enclosed, and at low water these covering irons had the appearance of bases to the columns, and they fitted loosely, so that, in the event of any settlement, they would offer no obstruction to the columns. A mark was made on the outside of each column, 12 in. above these bases, to ascertain if any subsidence did occur. This, of course, could only be observed to the extent of 2 in., when, as before described, the structure would bear upon the raft.

The total weight of the structure is about 72 tons, being a weight of 8 tons a pile, or 12¾ cwt. a superficial foot of bearing surface of the screws at the ends of the piles.

The usefulness of a lighthouse entirely depends upon the accurate construction and effective working of the light-giving appliances, and no engineer has given this subject greater attention than D. M. Henderson, to whose paper upon Lighthouse Appliances and Lanterns, in the Trans. Inst. C. E., 1869, we are indebted for the succeeding particulars.

There are, writes Henderson, six orders of catadioptric apparatus in general use, the first three designated sea-lights, and the second three harbour-lights, but modifications in size have been made for particular cases.

The largest size of apparatus is that known as the First Order, having an internal diameter of 1·84 mètre = 72·442 in., and a height of glass of 2·704 mètres = 106·447 in. In the old section there were thirteen upper and six lower prisms, but the section now generally adopted has eighteen upper and eight lower prisms, Fig 5057, so that the paths of the rays through the prisms are shortened; there is thus less loss by absorption, and greater accuracy is attainable.

The Second Order has an internal diameter of 1·4 mètre = 55·119 in., and a height of glass of 2·121 mètres = 83·525 in. In the old section there were twelve upper and five lower prisms, but the section now generally adopted has sixteen upper and six lower prisms, Fig. 5058.

The Third Order has an internal diameter of 1 mètre = 39·371 in., and a height of glass of 1·56 mètre = 61·435 in., Fig. 5059.

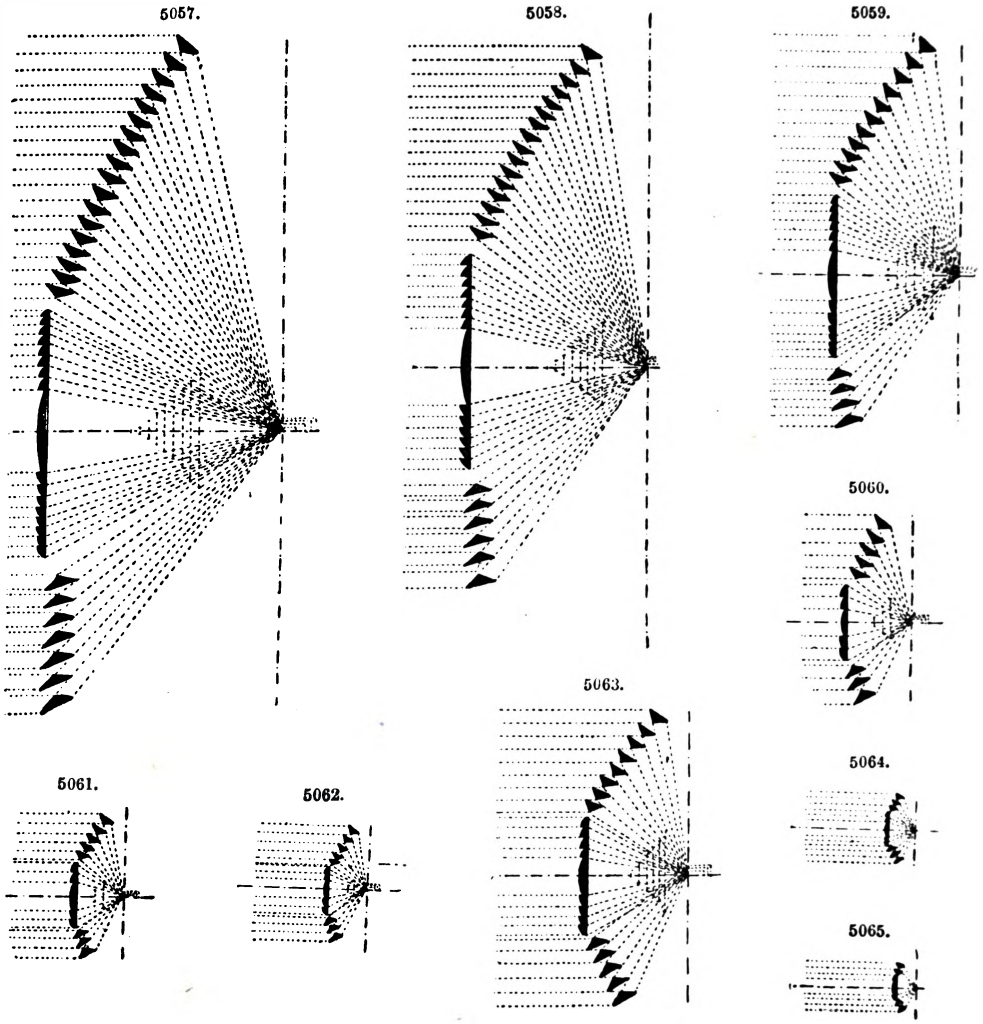

The Fourth Order, being the largest of the harbour lights, has an internal diameter of 0·5 mètre = 19·685 in., and a height of glass of 0·739 mètre = 29·112 in., Fig. 5060.

The Fifth Order, Fig. 5061, has an internal diameter of 0·375 mètre = 14·764 in., all the dimensions being three-fourths of those of the Fourth Order.

The Sixth Order, Fig. 5062, has an internal diameter of 0·3 mètre = 11·811 in., all the dimensions being three-fifths of those of the Fourth Order.

Another order has been introduced between the Third and Fourth, called the Small Third Order, having an internal diameter of 0·75 mètre = 29·528 in., and a height of glass of 1 144 mètre = 45·056 in., Fig. 5063.

In addition to these there have been made the annular lens, shown in section, Fig. 5064, for improving the old reflectors, and called the Seventh Order; and an apparatus, with an internal diameter of 0·15 mètre = 5·906 in., called the Eighth Order, Fig. 5065, which has been used for small fishing stations, ships' lights, and for floating light-vessels.

These various orders relate to the size of the apparatus, and consequently to the power, which is equivalent to the range, since suitable lamps are placed in the focus of each apparatus. Care is therefore necessary in selecting the proper order of apparatus for each lighthouse, as by a too small

order there will not be power enough to light the required distance, and by a too large order there will be a useless expense, not only in the original cost of the apparatus, but also in the lantern, tower, and in the increased maintenance.

The various sections of apparatus already mentioned have been designed to suit oil flames, and the focal lengths chosen have such a relation to the size of the flame as to give a useful amount of divergence.

When petroleum takes the place of oil, if a disc be used in the centre of the circular wick, it becomes necessary to change the position of the foci, to suit the altered shape and condition of the flame. This has been done in France, and with very satisfactory results.

Much remains to be done in the application of petroleum, as at present only burners with one circular wick have succeeded. Petroleum, from the greater whiteness, brilliancy, and cheapness of its flame, and its non-congelation through cold, is sure of a much more extended application than it has at present.

In the electric light, from its condensed size, the focus for all the parts of the apparatus is in a point, and from the shape of the carbon points, as great an angle of light is available below the focal plane as above it.

There are two grand classes of lights, as far as the effects they produce are concerned, namely, fixed and revolving, but there are many combinations of the two plans. The former give a steady light of uniform intensity over the whole arc of the sea required to be illuminated; while the latter concentrate their light into parallel beams which, when the apparatus revolves, produce flashes preceded and followed by an eclipse or total darkness. In fixed lights, not illuminating the whole horizon, means should be adopted to utilize all the light not required in the non-illuminated arc. In dark arcs up to 180°, metallic or glass reflectors are used, but when these arcs are greater than 180°, the excess must be utilized by some other arrangement designed for the particular case, and it frequently happens that vertical condensing prisms, placed outside a continuation of the fixed light, are the most advantageous. When the whole horizon is not illuminated, vertical condensing prisms can sometimes be used for intensifying particular arcs requiring a more powerful illumination, or for showing a coloured light equal in intensity to the adjoining white light.

No general rule can be laid down for the apparatus, as each light has to be designed to suit its particular requirements. The method of determining the shape of a prism by calculation, although simple, is a lengthy operation requiring great care from the number of figures used, and when a design containing a number of prisms has thus been worked out, it generally happens that some modifications are advisable—1, to equalize the sides of the prisms; 2, to suit the framing; 3, to cause the light to miss particular lantern standards. Even if the prisms are worked out from the calculated angles only, the operation is tedious and somewhat uncertain. To obviate this a refraction protractor was designed by Alan Brebner, assistant engineer to D. and R. Stevenson, which enables prisms to be drawn in with great speed and accuracy. After the arrangement has been decided upon, the prisms can be calculated to verify the setting out, and obtain the necessary dimensions for the grinding, without being liable to the inaccuracies of scaling.

Some further modifications have been made in fixed lights to render them intermittent. Thus, at Minehead, in Ireland, the light is visible for fifty seconds at a time; the periods of light being separated by ten seconds of darkness. This result is obtained by means of two screens, surrounding the flame, which suddenly cover and again uncover the flame, the necessary motion being obtained from clockwork placed in the pedestal supporting the optical apparatus. This light is highly characteristic, as there is a long period of light suddenly followed by total darkness, without the waxing and waning of the revolving apparatus; but there is this objection, that no use is made of the light generated during the periods of darkness, so that $\frac{1}{6}$ of the total quantity of oil burnt produces no useful effect.

Oscillating vertical screens have been successfully applied in France, the first application being at the Pointe de Grave Lighthouse, in 1865. H. Lepaute exhibited at Paris, in 1867, a third order, arranged to illuminate 72° of the horizon, with oscillating vertical screens darkening at regular intervals 18° and 25° respectively on each side of the apparatus. The mechanical arrangements were admirable, but no attempt was made to utilize the remaining 288° of light.

The revolving light, however, admits of a greater number of variations, as the flashes may vary from one every two minutes, to one every four seconds. Longer intervals have been adopted but they, as well as the two-minute flashes, are not liked by mariners, on account of the difficulty of identifying the light, and the length of time they are left in the dark. Combinations of fixed and revolving panels are adopted to produce further variety. Colour is applicable to both fixed and revolving lights, but only red, green, and blue are admissible, the former alone being suitable for sea-lights, as the two latter have too limited a range. The amount of light absorbed by the colouring media varies from 55 to 90 per cent., depending upon the colour itself and the depth of tint employed. Red is a valuable colour, as it is difficult to mistake it for any other, and for equal intensities it has the longest range. Even in a fog when white lights are reddened, there will seldom be much to fear, as the mariner is well aware of the fact, and expects to find the white lights reddish, and the red ones rather deeper in tint. The red shades and chimneys used in France are of what is called pink ruby, which absorbs about 57 per cent. of light, whilst the ruby used in this country is called red ruby, giving a deeper tint than the French, but absorbing nearly 75 per cent. of light. Green and blue are only admissible for short ranges, as even in fine weather they cannot be seen far, and the least fog obscures them, more particularly the blue.

It will thus be perceived that, in fixed lights, there are two useful colours, white and red, by which distinction may be obtained, and these are sometimes employed in the same apparatus to mark particular arcs. Further distinction can be produced by rendering the light intermittent. In revolving lights the same colours are applicable, the flashes may be all white, all red, or combinations of both. Many ingenious arrangements have been carried out in France, for rendering the white and red flashes of equal intensity in the same apparatus, such as proportioning the number of degrees condensed into each beam, and adopting different focal lengths.

In sea-lights, on account of their size and weight, it is necessary to divide the lenses into several portions. The section of the apparatus, consisting of lower prisms, lenses, and upper prisms, gives a convenient division into three tiers, each of which is subdivided into panels of a convenient size. In a First Order fixed light the circumference is divided into eight panels of 45° each, which are made of gun-metal racks, or side pieces, formed to receive the lenses and prisms, these side pieces being connected together with gun-metal segments of rings at the top and bottom.

Figs. 5066, 5067, give an elevation and section of one segment of a First Order fixed light. This is the arrangement in general use, all the joints of the panels being vertically over each other.

Fig. 5068 is a general elevation of an arrangement with inclined lens-panels, and the upper prism panels are so placed that their joints do not come vertically over those of the lower prism panels.

5066. 5067.

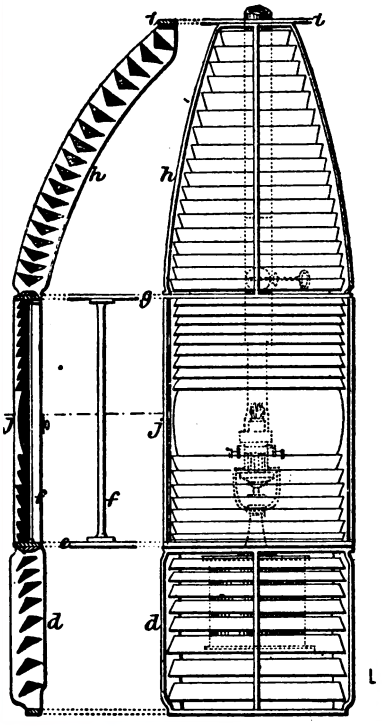

5068.

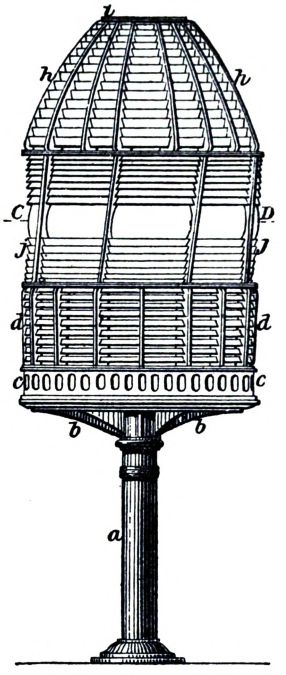

5069.

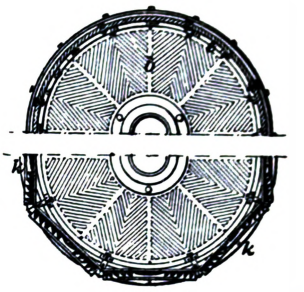

5070.

5071.

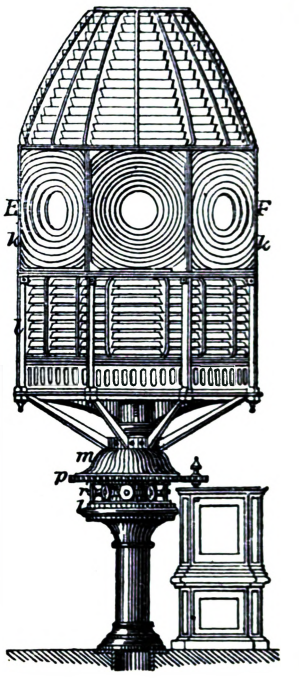

Fig. 5069 gives a half horizontal section through the focal plane of Fig. 5068. In Figs. 5066 to 5068, *a* is a cast-iron column, bolted to the light-room floor, and having its top turned to receive the table *b*, which is free to revolve until the apparatus is placed in its correct position, when it is securely fixed by a set screw. An ornamental balcony *c* is employed to receive the lower prism panels *d*, carrying on their top the connecting ring *e*, on which are erected the standards *f*, one of which is placed behind each junction of the lens panels. When inclined panels are used for the lenses, the standards *f* are also inclined, and stays are introduced, inclined in the opposite direction, to obtain sufficient rigidity. A second ring *g* connects these standards at their upper extremities, and supports the upper prism panels *h*, which are connected together at their top by a ring *i*. This ring is sometimes stayed to the lantern, and forms a support for the ventilating tube. The lens panels *j* are held in their places by small dovetail pieces entering into the top and bottom framing of the lens panels, and secured by means of screws to the rings *e* and *g*. The lens panels are made one millimètre shorter than the distance between the outside of the connecting rings *e* and *g*, in order that no weight may rest upon them from the upper cupola, an arrangement which is of great convenience during construction, as it enables the lenses to be taken down to dry after they are set, and to be out of danger whilst the cupola of upper prisms is being set. At the lighthouse also it affords greater safety to the lenses, because in a storm the whole apparatus is sometimes subject to considerable vibration, and in the case of a lens getting broken, the panel containing it can be taken down and sent for repair without interfering with the rest of the apparatus. In some cases a spare lens panel is supplied. In a few instances the upper prism panels have been made to rest directly on the lens panels. The dotted lines in Fig. 5067 show the position of a First Order lamp and burner.

Fig. 5071 is an elevation, and Fig. 5070 a horizontal section through the focal plane of a First Order apparatus, where the upper and lower prisms are fixed, and mounted as before explained, but the lenses *k* are annular, and mounted on a framework of wrought iron *l*; this revolves outside

the fixed portion, and is bolted to the casting m, which receives a rotatory movement from the clockwork contained in the case n, by means of the pinion o, and wheel p, screwed on the outer edge of the casting m. The central column, which is fixed, carries the service table, optical apparatus and lamp, and has a projecting moulding upon it about half-way up, which is turned on its upper surface, and fitted with a steel ring q, forming the roller path for the friction-rollers r. These rollers revolve round the central column, and are retained in their places by a connecting ring and guide-rollers, working round the central column on a turned path. There are several modifications of this apparatus in use, as sometimes only a fixed light is shown in the lower prisms, and the upper prism panels are employed to intensify the flash from the lenses. The number of sides and the rate of revolution are also varied to produce distinction. The arrangement of the clockwork placed at the side of the central column, as shown in this figure, is essentially French; ample strength and solidity are obtained when only the lenses revolve, as the weight is inconsiderable. The cost of this arrangement is less than of that shown in Fig. 5072, where a large square pedestal contains the clockwork.

Fig. 5072 is an elevation, and Fig. 5073 a horizontal section through the focal plane of an eight-sided revolving light, collecting the whole light into eight beams of parallel rays. The usual speed of this apparatus is one revolution in eight minutes, so as to produce one flash a minute, but flashes at intervals of eight and ten seconds have been produced from a similar apparatus, by a slight change in the gearing of the clockwork. s is the pedestal with glazed doors, on the four sides, opening to give access to the clockwork. A small column is bolted to the top of this pedestal, which supports the fixed table t, carrying the lamps, and forms a guide for the revolving portions of the framework. $u\,u$ are the friction-rollers, working between the steel rings y, and secured to a connecting ring, carrying guide-rollers, which work round the central column. As this is the part where the greatest wear occurs, care in detail is necessary. Steel rings and rollers edged with steel, all of the best quality, are fitted with the greatest accuracy, so that an equal amount of work may be done by each roller. Washers of various thicknesses are provided, to allow the course of the rollers to be varied over the roller paths, so as to distribute the wear, and prevent deep grooving. With every precaution there is considerable wear, and it is advisable to construct all the rings in halves, an arrangement which renders their renewal possible without taking down the whole apparatus. Brass rollers have been tried with a view to their receiving nearly all the wear, and thus save the steel rings, but they had this disadvantage, that they wore away so rapidly under the heavy pressure that in a few weeks they had large flat edges, requiring much power to grind them round, and producing an irregular motion which soon resulted in their total destruction. Conical rollers have been tried, but they are not much liked, as from the outward thrust there is a difficulty in keeping the rollers up to their work, and there is a large amount of friction against the ring holding them in. It should be remembered, however, that all these trials were made with roller paths of under 2 ft. diameter, and with the same diameter of rollers as are now generally used, that is, about 5 in. A more favourable result would be obtained from conical rollers with the large diameter of roller paths now used, reducing the outward thrust, and enabling twelve or more rollers to be used to carry the same total weight which formerly was carried by only six. Conical rollers are now being used by Chance, of Birmingham. v is a carriage revolving round the central column, upon the friction-rollers $u\,u$, and receiving its motion from the clockwork, by means of a pinion gearing into the internal gun-metal wheel w screwed to the revolving table v'. The two castings v and v' are bolted to each other. On the top of the casting v' are bolted eight wrought-iron standards, which carry the whole of the optical apparatus, fitted together in panels as before explained. At the top are guide-rollers x, fastened to the upper connecting ring, and working round a turned roller-path, supported by a T-iron framing attached to the lantern.

Fig. 5075 shows an elevation, and Fig. 5074 a horizontal section through the focal plane of a First Order apparatus, commonly called a fixed light varied by short eclipses, a title which certainly does not state the actual effect, namely, that of a fixed light followed by an eclipse, a flash, and an eclipse, the same phases being continually repeated. The apparatus consists of four sides, of 45° each, constructed as for a regular eight-sided revolving light; four complete segments, of 45° each, of a fixed light, as in Figs. 5067, 5068, are fitted in between them, and the whole is mounted on a revolving carriage working on a fixed pedestal, as already explained. If the apparatus revolve once in eight minutes, there will be one minute of fixed light, twenty-six seconds of eclipse or darkness, eight seconds of flash, and twenty-six seconds of eclipse, followed by a repetition of the same. In many of these revolving lights it is customary to leave out one of the lower prism panels, so as to afford access to the lamp, but in some cases a hinged panel is used, and in others sufficient height is given to pass underneath, as in Fig. 5076. In fixed lights illuminating the whole horizon, access can be had through a man-hole in the service table. Revolving lights are made of eight, twelve, sixteen, and twenty-four sides, to enable the intervals between and the intensities of the flashes to be regulated.

In Second Order fixed lights, the panels are made of 60° each, and revolving lights have eight, twelve, and twenty sides.

In Third Order fixed lights, the panels are made of 72° each, and revolving lights have eight, twelve, and sixteen sides. The number of sides may of course vary from those given, and it will be for the engineer to determine the number suitable for the requirements of the lighthouse about to be erected.

The method of framing Second and Third Order lights, both fixed and revolving, is similar to that adopted for First Order lights.

Harbour lights, from their small size, are generally fitted together in one piece. Figs. 5077, 5078, give a sectional elevation and sectional plan through the focal plane of a Fourth Order fixed light illuminating three-fourths of the horizon, the remaining one-fourth having a silver-plated reflector. The lamp shown is a moderator, placed upon an adjustable stand for regulating the position of the

burner. Figs. 5079, 5080, are an elevation and sectional plan through the focal plane of a six-sided revolving Fourth Order, mounted on a square pedestal containing the clockwork. The French

5072.

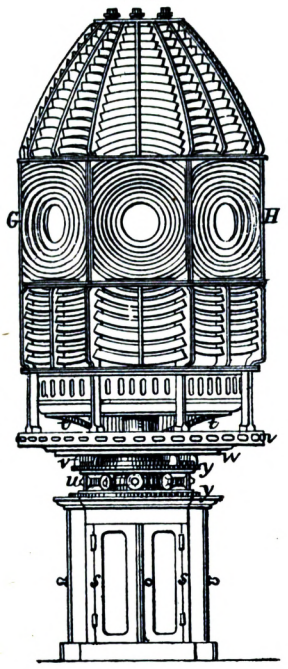

5073.

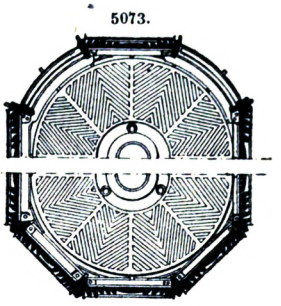

5074.

5075.

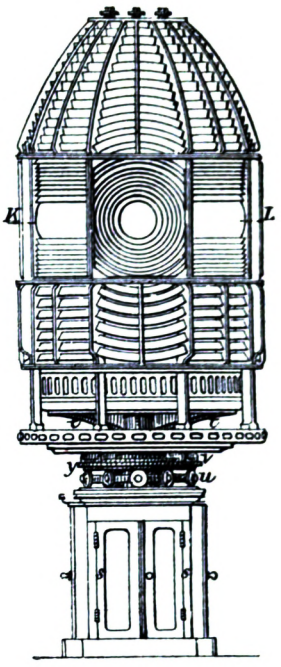

5076.

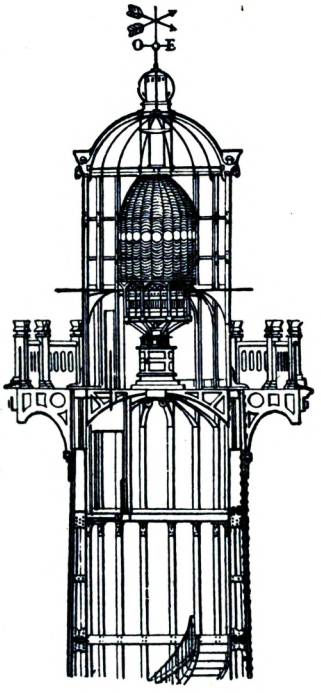

5077.

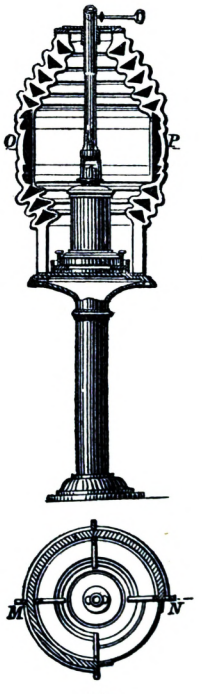

5078.

5079.

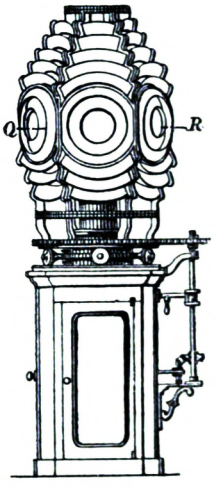

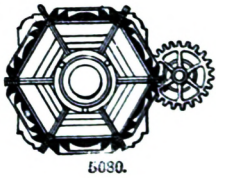

5080.

arrangement of placing the clockwork at the side, and of having a small column to carry the apparatus, is in some cases convenient, in others necessary, on account of the small size of many harbour lanterns.

The construction of panels for the old lights was more complicated than the present method, as there was a regular framework or armature of wrought iron, between which the panels were fitted. This framework caused great loss of light, from the joints sometimes having a thickness of $1\frac{3}{4}$ in.

or 2 in. The distances from the wrought-iron standards to the indented edges of the panels were filled in with gun-metal, and in the English apparatus no chipping pieces were used, so that the weight of gun-metal, and the cost of fitting, were much greater than in the modern method. D. M. Henderson advocates a reduction in the thickness of the sides of the panels, to economize light and gun-metal, and to enable all, or nearly all, the framework to be arranged by machinery in place of by hand. The indented or serrated racks were troublesome to fit, owing to the large extent of edges requiring to be accurately made to correspond. By the method now adopted, and shown in the First Order apparatus, much fitting has been saved, and, by casting the side racks recessed, with only a chipping fillet run round the edges, an economy of metal results, and increased rigidity is obtained in the panels. Lining plates of gilding metal about $\frac{1}{16}$ in. thick are used to finish off the ends of each panel, and hold in the prisms; at the same time they cover all the recesses, giving the same appearance as if the racks were solid. The intermediate racks cannot be recessed, as there is no covering plate, but the thickness is only about $\frac{1}{4}$ in., and they weigh less than the former thick indented ones. If desired, there is no reason why these latter should not be cast indented as before. The racks are planed on both sides; the outer edges are filed, and the apertures for the prisms, when the castings are accurate, only require cleaning up. The upper and lower connecting rings are turned in one piece, or in segments fitted together. To make a panel, two racks or side frames are butted against the upper and lower segments of rings, and after a couple of wrought-iron screws have been put into each joint, the whole is soldered together, and, in the panels which have an intermediate rack, it is afterwards added in a similar manner. After the panels are made, they are erected upon a table, having its upper surface turned and placed perfectly level, with a round centre rod accurately fitted in a socket, so that its centre corresponds with the vertical axis of the apparatus to be erected. By means of gauges, with semicircular ends fitting round this centre bar, and resting on adjustable collars, the panels are fitted in their places, and the holes marked out for the screws to hold the whole together. By the use of templates, and the accurate machine-work now applied to all the meeting surfaces, panels can be made interchangeable, which was impossible in the old arrangement of armatures produced by hand. The amount of clearance round each prism is $\frac{1}{8}$ in., to allow for adjustment in setting the prisms, and for the putty used to secure the glass.

When the fitting is finished, the panels are taken to the erecting shed, where they are erected on their pedestals, or on what is more convenient, a revolving table, specially constructed so that each panel, or part of a panel, can be brought in succession opposite the erecting post. An arrangement of erecting table is shown in Fig. 5081, where *a* is a ribbed cast-iron bed-plate, with a turned pathway *b* on its outer edge for the friction-rollers *c*, and another turned pathway on its vertical central shaft, to form a pathway for the guide-rollers *d*. The top table *g* has a similar roller path *e*, and guide-rollers *f* on its under side, and the top is turned and pierced with holes to enable the various sizes of apparatus to be secured to it. A wrought-iron plate *h* covers the central aperture, leading into a pit prepared for the reception of the driving weights of a rotatory machine, or mechanical lamp. As the operation of setting the glass produces much débris, from the plaster of Paris and putty used in fixing the prisms, the erecting table should be designed to protect the friction and guide rollers as much as possible from the dust. Apertures are provided in the bed-plate to afford access to the guide-rollers, and enable the whole of the interior to be cleaned without lifting the upper table. The inclined roller paths do not accumulate dirt, and do not require oiling. The prisms are passed into their places, one end covering plate of the panel to be set being removed, and wooden wedges are used to support the glass, and enable it to be accurately adjusted in its position by means of internal observation. When the prisms are adjusted, plaster of Paris is applied at all the corners to retain them in their correct position, and when it is fairly set the wedges are removed, and the remaining spaces filled in with best red-lead putty. In the lens panels, as glass butts upon glass with only a thin film of cement intervening, there is no means of adjustment such as exists in the case of the prisms. The only method is to build up each lens panel, beginning at the bottom, and to make each ring correct before another ring is superposed. This latter fact has, up to the present time, prevented any attempt being made to readjust the lens panels in those lights whose upper and lower prisms have been readjusted as this could only be done at the manufactory. The readjustment of defective lights is a point of importance, for by a small outlay, for a First Order apparatus, a great improvement has been effected, and a good result obtained from the upper and lower prism panels, which frequently threw all the light falling on them where it was impossible to be seen. The effect of the lens panels in many lighthouses can be, and has been, improved by placing all the centres in one level plane, with the inner surfaces vertical, and then putting the burner in its most advantageous position, in the centre of the whole combination.

5081.

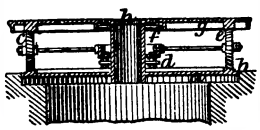

The arrangement of panels generally adopted is that of placing one panel over the other, so that the joints come vertically over each other; and it has in its favour—simplicity, a minimum loss of light, a minimum cost, and strong convenient-shaped panels. These advantages have been considered of such importance that in France the above method is still adhered to, and all the lanterns are constructed with vertical standards placed in front of the obscuration caused by the sides of the panels. Figs. 5082, 5083, represent in elevation and plan this arrangement, which has the disadvantage of causing as many points, or rather small arcs, on the sea, as there are standards in the lantern, to be illuminated with a considerably weaker light. In front of each standard of a First Order lantern the light is weakened from 30 to 57 per cent., according to the thickness of standard employed, and there will be sixteen points on the horizon, when it is all illuminated, receiving this weakened light. In harbour lights the obscuration is frequently greater, on account of the small diameter of the flame, and the thickness of the standards. Alan Stevenson, aware of this defect, was the first to introduce inclined lens panels, with a view to equalize the distribution of light on the sea, but he was well aware, no doubt, that there would thus be a diminution of light.

Several lighthouse authorities adopted a lantern with inclined standards, thinking to obviate the difficulty connected with vertical standards, but no alteration was made in the construction of the optical apparatus. Figs. 5084, 5085, represent, in elevation, the effect of an inclined standard projected upon the apparatus, and in plan the actual position is given. The horizontal divergence, resulting from the size of the burner, may be taken at 6°, and the standard is inclined over an angle of 7½° in plan, so that when an observer is placed in front of the standard, it nearly stops off the light from him throughout its entire height, commencing on one edge of the flame and finishing on the other, thus obstructing much light which had successfully passed through the apparatus. The defects of this system are apparent, as more light is stopped without there being any greater uniformity, and a more costly and unsightly lantern is obtained. The French engineers have always seen and avoided this error.

The lantern of J. N. Douglass is designed to render impossible a correspondence, or optical coincidence, between the framing of the apparatus and that of the lantern. The effect is shown in Figs. 5086, 5087, where the shaded portions represent the framing of the optical apparatus, and the thick black lines the lantern framing. The framing of the apparatus stops 4·5 per cent. of the surface of the apparatus, and the framing of the lantern 6·8 per cent. of the surface of the lantern glazing, and as the two obstructions do not coincide, the total loss becomes very serious. These lanterns are expensive, from the amount of workmanship of a costly class, and from the quantity of glass cut to waste.

To obviate the objections of the previous methods, D. M. Henderson designed the following arrangements.

The first consideration is the optical apparatus, and it is apparent that a minimum amount of light is stopped by vertical panels, and that it is possible to divide the previous large obscurations into a greater number of smaller ones; thus equalizing the light without in the slightest degree increasing the total obscuration. By excentering or placing the various tiers of panels so that their joints do not come vertically over each other, each previous obscuration is divided into three; the amount of excentering necessary depends upon the size of the flame, but it should be such as to enable one obscuration to be completely passed before entering upon another. In the First Order, for example, each panel subtends an angle of 45°; and, as there is an intermediate rack in the prism panels, there is an arc of 22½° between each obscuration. Each large obscuration can be divided into three small ones, which, if placed at intervals of 7½°, will never allow more than one obscuration to be visible at a time, as the divergence of the flame is under 6°. No practical difficulties or extra cost are involved in this arrangement.

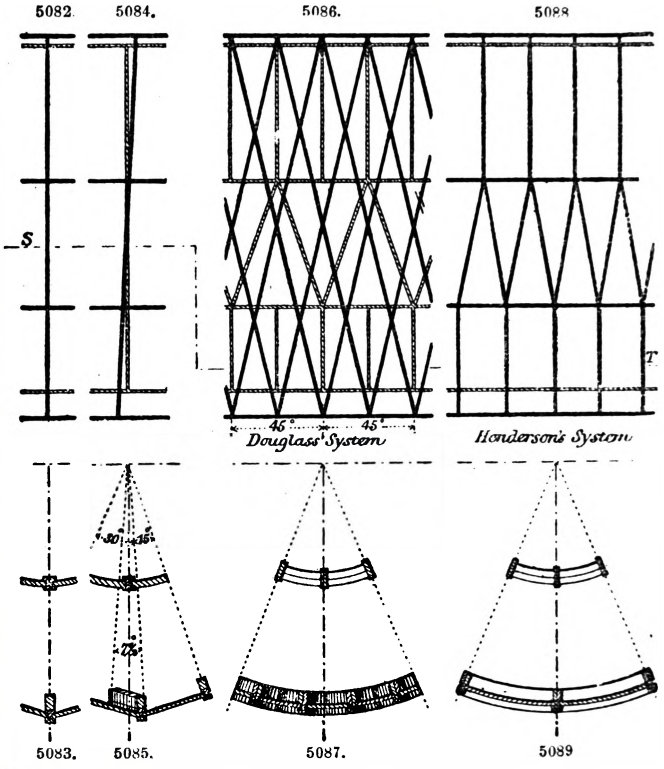

The next consideration is the lantern, which, when arranged with excentered panels, is rendered less rigid, owing to the weight not being transmitted continuously downwards as is the case with vertical standards. This want of rigidity would be objectionable for a light illuminating the whole horizon, but in those illuminating from 180° to 270°, which are by far the most common, the objection might be easily overcome, as the dark arc could be filled in with solid iron plates, by which great rigidity would be obtained. When the frames are riveted together and the ½-in. curved plate glass is in its place, additional strength will be obtained.

By the substitution of triangular frames in the central tier, it is still possible to retain the upper and lower panels excentered, and to render the framing perfectly rigid, in fact more so than with the vertical continuous bars of the old lanterns. This latter arrangement is peculiarly adapted for the employment of inclined lens panels. The result is shown in Figs. 5088, 5089, where the shaded portions represent the framing of the optical apparatus and the thick black lines the framing of the lantern. Much light is saved by the coincidence of the two sets of framing, as when a lantern standard is placed in front of a junction of the panels in the apparatus it will stop a little light, as the diameter of the flame is greater than the thickness of the joints of the panels. This will not happen in the case of the electric light placed inside a large apparatus.

The sole object of a lantern is to enclose an optical apparatus, and prevent its being damaged by wind, water, or birds, so that the maintenance of a perfectly steady and high flame may be ensured. The lantern should be designed to suit the apparatus, care being taken to get the

necessary strength with the least possible obscuration of light, and its size should be such as to afford ample space for the light-keeper to attend to his duties, at the same time avoiding too great size as a useless waste of money, which would be much better spent in establishing other lighthouses in localities destitute of them.

SIZES OF LANTERNS IN GENERAL USE.

Order.	Number of Sides.	Internal Diameter of Light-room.	Height of Glazing.	Height of Focal Plane above Light-room Floor.
		ft. in.	ft. in.	ft. in.
1	16	12 0	10 0	11 6
2	12	10 0	8 0	10 10½
3	10	8 0	5 6	8 10½
4	8	6 0	3 6	4 7½
5	8	5 0	3 0	4 6
6	8	4 6	2 9	4 6

The lantern proper consists of the framing for the glass, the plate glass, a sole plate, an inner service gallery, with the necessary brackets to support it, steps to lead from the light-room floor to the service gallery, and the cupola complete with the cowl. In the case of stone or brick towers the light-room is frequently built of the same materials; but sometimes in stone, and always in iron towers it is constructed of wrought or cast iron. Fig. 5090 represents a sectional elevation, and Fig. 5091 a half sectional plan through the glazing, and a half sectional plan through the light-room, of a First Order lantern with inclined standards. The light-room is composed of sixteen cast-iron plates, eight large ones *a*, subtending an angle of 30° each in plan, and eight small ones *b*, of 15° each, fitted together to form a circular chamber of 12 ft. 2 in. internal diameter, and an irregular polygon outside about 13 ft. across the corners. These light-rooms are frequently lined with mahogany, pine, or corrugated iron; a wood lining *q* is shown in Figs. 5090, 5091, 1 in. thick, reducing the internal diameter to 12 ft. Eight ventilators, one in each small side, are generally employed, the construction being such as to prevent water entering, and with gun-metal hit and miss valves the supply of air can be regulated at will. The service gallery *c* is of open cast-iron plates carried on brackets *d*, bolted in between the flanges of the blocking, and steps *e*, provided with a hand-rail, lead from the light-room floor to this gallery. A sole plate *f* is fitted on the top of the blocking, forming at the same time an outer gallery for the light-keeper to stand upon whilst cleaning the outside of the glass. The standards *g* are sixteen in number, alternately inclined in opposite directions, so that the large side at the bottom becomes the small side at the top, and the reverse; they are made of wrought iron, having feet passing down between the flanges of the blocking plates, to which they are secured by a couple of bolts for each foot. Two sets of horizontal gun-metal astragals *h* divide the lantern into tiers corresponding with the divisions of the optical apparatus.

5090.

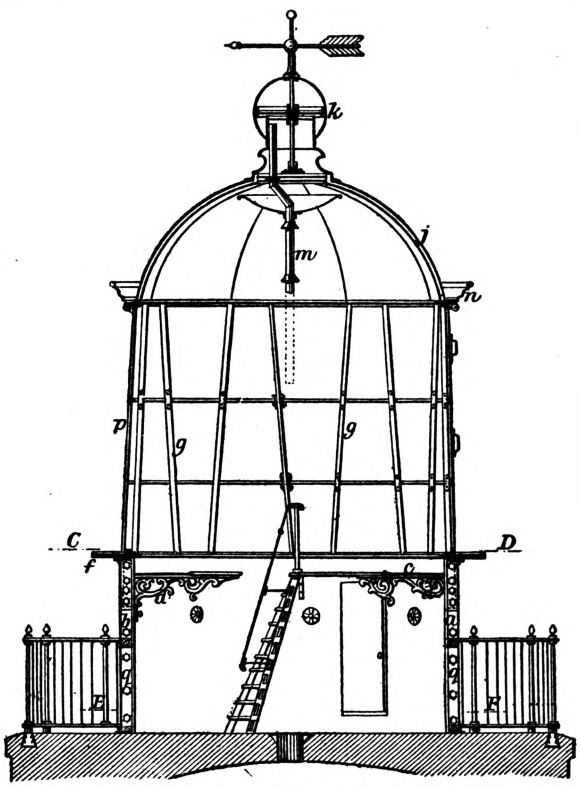

5091.

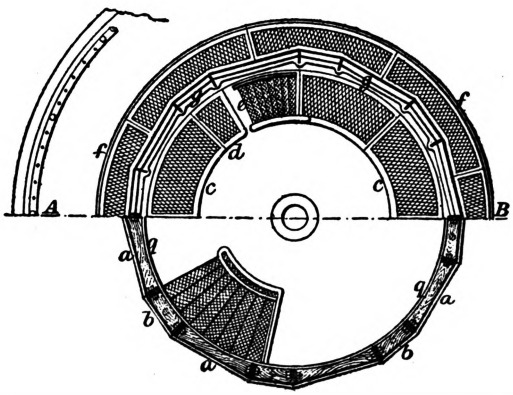

strengthen the framing, and assist in securing the plate glass. The standards are united at the top to a wrought-iron connecting ring, to which are attached the rafters *j*, about 1⅛ in. square, covered in with an outer roofing of copper 3 lbs. to the square foot, and an inner roofing 1½ lb. to the square foot. This inner roofing is sometimes of zinc or galvanized sheet iron. The cowl *k* is a revolving one of sheet copper, mounted on a spindle working in an oil cup at the bottom of the neck, and underneath is placed a hollow dish to prevent any drops of water that might accumulate inside the cowl from falling on the apparatus. A ventilating tube of copper *m* conducts all the products of combustion direct into the cowl, where they pass out by a number of 1-in. holes, which are always turned from the wind by the vane on the cowl-spindle. The gutter *n* is of sheet copper, provided with a stiffening wire at its upper edge, and gun-metal joint-covers. A copper ladder rod is fixed to the under side of the gutter, and inside the lantern a similar rod or hooks are provided for the curtains. The glazing is of ⅜-in. plate glass *p*, which is secured in its place by gun-metal strips and screws, and two tiers of handles facilitate its cleaning. Rain-water pipes, fitted in front of two of the standards, convey the water from the gutter to the foot of the lantern. Figs. 5092, 5093, are details of a standard *g*, showing the connection with the astragals *h*, and how the glass *p* is secured. A facing strip of gun-metal *i* is screwed to the standard, so that the glass rests in a gun-metal groove, and all the screws securing the strips which hold in the glass are screwed into gun-metal, and are consequently easily removed in case of a pane being broken. Fig. 5094 shows a detail of the lower gun-metal sill *o*, resting on the sole-plate *f*, which is bolted to the top of the blocking *a*. The mahogany lining *q* is secured to pine packing pieces *r*, wedged in between the flanges of the blocking. This lantern is objectionable, on account of the too small inclination of the standards and their non-coincidence with the joints of the optical apparatus. The large flat sides are ugly, and those of the blocking are easily broken, on account of the small depth of flange at the centre of the plate compared with that at the sides. The cost is increased by the more difficult workmanship, by more glass being cut to waste than with vertical standards, and from the fact that six different sizes of panes are used in place of three.

5092.

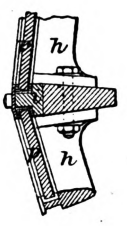

5093.

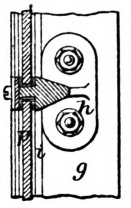

5094.

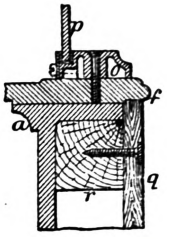

The French adhere to one form of lantern for all apparatus burning oil; a description of which may be of interest, to enable a comparison to be made with the lantern previously described. The example selected is the First Order lantern, Fig. 5076, designed for the Roches Douvres, about half-way between the islands of Guernsey and Bréhat. The lantern standards are vertical, sixteen in number, and extend in one piece from the cornice to the bottom of the light-room, which is formed of wrought-iron covering plates screwed to the standards and to the framing connecting them. The standards are faced with gun-metal, and have gun-metal astragals, upper and lower sills to receive the plate glass, and ventilators fitted all the way round in the lower sill. The under portion of the cornice forms the gutter, which conducts the rain-water to a lion's head placed over each standard; while the upper portion is of open work, which improves its appearance, and hides the little ventilating boxes placed in the gutter. The cowl is fixed, and is provided with a movable vane to indicate the direction of the wind. The roof and all the parts exposed to the sea above the light-room are of gun-metal or copper. The roof is supported on a regular framework of iron, which also carries the steadying cylinder for the optical apparatus. The apparatus has twenty-four sides, and makes one entire revolution in 1 minute 36 seconds, so as to give a flash every four seconds. This great speed necessitated a special construction of clockwork, which was successfully accomplished by Henry Lepaute, who constructed the whole apparatus and lantern. The total weight of the revolving portion is 2 tons, and the driving weight 121 lbs., falling 66 ft. in six hours. The regulator is the centrifugal one invented by Fresnel, and afterwards improved by Lepaute. The section of glass consists of nineteen upper prisms, a central lens, with eight lens rings both above and below, and eight lower prisms. A mechanical lamp burning colza oil is used, and the intensity of the flash is estimated at 2475 becs carcels. The whole of the armature was constructed with the least possible weight, to save the friction-rollers, and sufficient height was given to enter the apparatus without omitting, or suspending on hinges, any of the lower panels.

Figs. 5095 to 5098 are an elevation and plan through the glass, and a half sectional plan through the blocking, of an arrangement of lantern designed by D. M. Henderson to remedy the defects of previous lanterns.

The apparatus, Fig. 5068, is arranged for the most uniform distribution of light practicable; and the lantern here described is capable of being put round that apparatus with only a small obstruction of light. The blocking is circular, of cast iron, but it may be of wrought iron, with wooden or corrugated galvanized iron lining; and sixteen ventilators are employed, one in each segment. An inner service gallery is carried on brackets, and a sole-plate with outer cleaning path, rests on the blocking. It is preferred to make the framing of forged iron or steel, but it may be of cast iron. The quadrilateral frames in the lower tier are fitted together with vertical joints, and form a level surface on which rest the triangular frames of the middle tier, again forming a level surface for the upper tier of quadrilateral frames. A cast-iron gutter is shown, as it can be easily connected with the framing, rafters, and roofing plates, thus doing away with a considerable amount of work.

Fig. 5097, a detailed section of the framing, and manner of securing the plate glass by gun-metal capping.

Fig. 5098 shows in detail the connection between the framing, gutter, rafters, and roofing plates. There is a much larger air-space than usual, and the rafters have apertures in them to

5095.

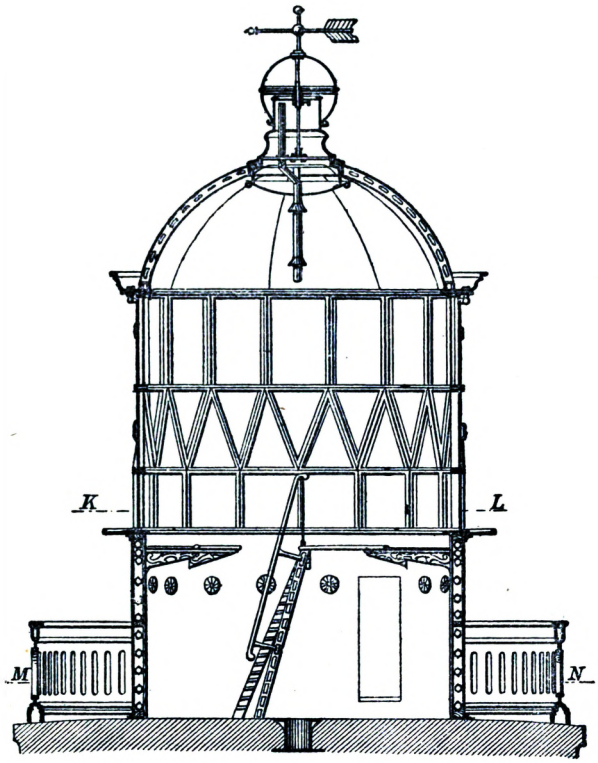

5096.

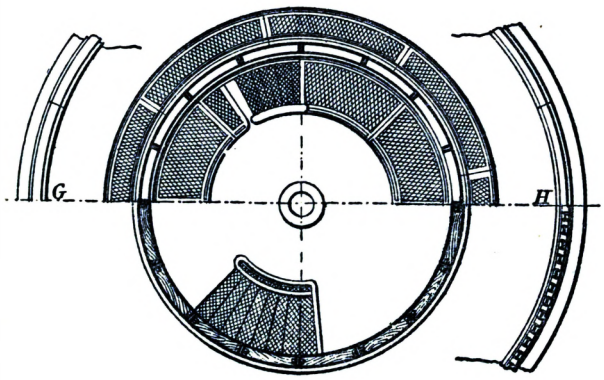

5097.

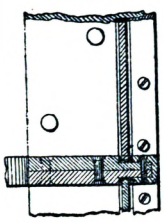

5098.

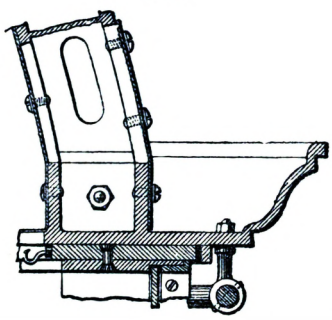

5099.

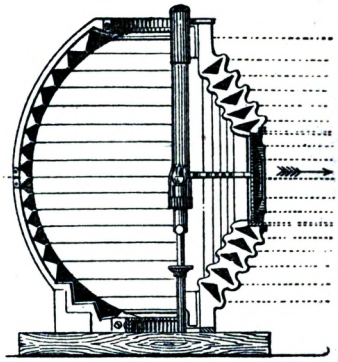

5100.

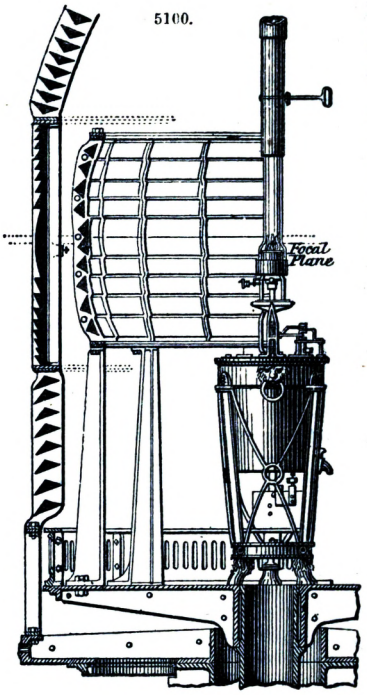

5101.

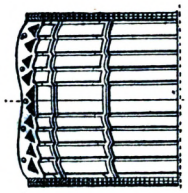

5102

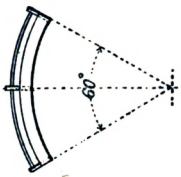

enable the air to circulate freely. Circular glazing is preferable to flat, on account of its greater strength, and as being better calculated to resist the action of the wind; besides the rays of light pass normally through it.

Fig. 5099 is of the first catadioptric mirror ever made, and which was used by the Stevensons in conjunction with a Sixth Order holophote, to condense the whole of the light from an argand burner into a beam of parallel rays. The internal radius was $12\frac{1}{16}$ in., and the thickness of the joints was $\frac{3}{16}$ in. Sufficient space was left at the top and bottom for the passage of the damper tube and burner of the lamp. In this case the mirror was constructed of flint glass, whilst crown glass was used in the construction of the holophote. The employment of flint glass was costly, as it had to be specially made, and great accuracy was necessary in jointing the various pieces together.

Thos. Stevenson originally designed these mirrors with the zones generated round the horizontal axis; but in this instrument James Chance introduced for the first time the plan of forming the zones round the vertical axis, being that of the flame. The advantages of this latter plan are important optically, in addition to facilitating the construction of the zones themselves, and enabling the mirror to be easily limited both vertically and horizontally.

In Chance's mirror the zones are separated and divided into segments like the ordinary reflecting zones of a dioptric light; thus the radius of the mirror is considerably increased, and it is applicable to the largest sea-light, without overstepping the limits of the angular breadths of the zones, and without being compelled to resort to glass of high refractive power.

The separation of the zones also renders it feasible to avoid giving to the aggregate structure a spherical shape, which encroaches most inconveniently upon the space required for the service of the lamp.

In determining the sizes of the mirrors, the chief consideration was to arrange as few sizes as possible, in order to diminish the cost by the small stock of glass, moulds, and gauges that would be required, and to enable them to be used in revolving as well as in fixed lights.

Fig. 5100 shows a sectional elevation of a First Order mirror placed inside a revolving light of the same order. The internal radius is ·75 mètre, and the panels are ordinarily constructed of 45° in plan, so as to correspond with those of the apparatus. This size is equally applicable for both fixed and revolving lights.

Fig. 5101 is a sectional elevation of 90°, and Fig. 5102 a plan of one panel of 60° of a mirror of ·6 mètre radius, which is applicable to Second Order fixed and revolving lights, and to Third Order fixed lights. The construction of these panels is similar to that already described for the prisms, and in general they are secured to cast-iron brackets, which are bolted to the service table of the apparatus, as shown in Fig. 5100.

The lamps employed are of great variety, but all have the same object, to give a regular and abundant supply of oil to the burner.

In the sea-lights the following sizes of burners are generally adopted;—

Order of Apparatus.	Number of Wicks.	Diameter of Burner in inches.	Intensity in becs carcels.	Consumption an hour in lbs.
1	4	$3\frac{1}{2}$	23	1·677
2	3	$2\frac{5}{16}$	15	1·103
3	2	$1\frac{3}{4}$	5	·386

In the Fourth Order, a two-wicked burner, about $1\frac{3}{16}$ in. diameter, is used; but in the Fifth and Sixth Orders, single-wicked burners are generally employed, consuming from 0·17 lb. to 0·1 lb. an hour. The French have recently constructed a moderator lamp with two wicks, for the Fifth Order, which has considerably increased the intensity of light.

In most of the Scotch lighthouses, there is a larger consumption of oil than is given in the above Table, and consequently a greater intensity of light is obtained.

The three principal varieties of lamps now in use for sea-lights are the mechanical, the high reservoir, and the pressure. The mechanical are the most general, being adopted in Scotland, France, and many other countries. The most perfect is that employed by the Stevensons, and manufactured by Milne of Edinburgh. A sketch of this lamp is given in Fig. 5100. The French mechanical lamps also give excellent results. The oil, in both cases, is forced over the burner by pumps, which are worked by clockwork placed underneath and driven by a weight.

The high reservoir lamps have many varieties. One of the best is that designed by Captain Nisbet, of the Trinity House, and successfully applied to several English lighthouses. In this lamp the body is of copper, hammered to a vase shape, with plunger-pumps inside to force the oil up to the high reservoir, from whence it descends to the burner by gravity, a fountain arrangement being provided, so that the pressure is always constant. The high reservoir is fixed to the armature in the non-illuminated arc, at such a height as to give a head of 6 in. or 12 in. of oil. If a greater head is employed, the pressure necessitates the regulating valve being nearly closed, and thereby rendered more liable to be choked up by flock from the wicks or other foreign matter. The feed-pipe passes down to the service table and under its surface to the centre of the apparatus, where it mounts through the lamp-body to the burner, and the supply-pipe for the high reservoir passes side by side with it. Excellent provision is made for regulating the overflow by an indexed regulator worked by a thumb-screw, and at the outer edge of the service table are placed cocks for drawing off all the oil. These lamps are costly, and are not applicable to revolving lights or those illuminating all the horizon, on account of the obstruction of light caused by the high reservoir This is a defect common to all lamps of this class.

Fig. 5103 is a sectional elevation on line A D of a pressure lamp, upon Masselin's principle, equally well adapted for fixed and revolving lights, whether the whole horizon is illuminated or not. Fig. 5104 is a plan of the burner; Fig. 5105, plan on line C D; Fig. 5106, on line E F; and Fig. 5107, bottom of cylinder and stand. *a* is the service table, upon which is bolted the lamp-stand *b*, having upon its upper ring three screws *c*, for holding and regulating the position of the lamp. The apertures in the bottom flange of the lamp are large, so that room is provided for accurately adjusting the lamp in the centre of the apparatus. The body of the lamp *d* is made of a cylinder of sheet brass fitted into an upper and lower cast-brass ring, the whole being turned and bored previous to tinning the inside. The boring of the lamp-barrel is essential, as by that means, and the turning of the piston *e*, so little room is left between them that it is impossible for the cupped leather packing *f* to turn over. The piston is of cast iron, and has six guides *g* of leather, fitted edgeways between cheeks, so as to maintain the piston in the centre. A valve *h* is fitted in the centre, opening downwards, when the piston is raised, and facilitating the passage of the oil to the under side of the piston. It at the same time prevents the accumulation of air under the piston, as the valve only closes when the piston reaches the oil. A fine wire gauze is placed on this valve to exclude pieces of wick which might, through carelessness, enter the body of the lamp. The weights *i* are of cast iron, in discs, so that the weight can be varied at will; and connecting rods *k*, attached to the plate *l* at their bottom, and a ring *m* at their top, with a second set of connecting rods, apply the weight to the piston. All these connecting rods act as guide-rods, by being passed through holes in the cylinder and cylinder cover. The weight is raised by a handle fitting loose on the horizontal spindle *n*, under the body of the lamp. This spindle carries two pinions gearing into the racks *o*, which are attached to the plate *l*, and work in guides cut in the flange of the cylinder bottom. A tap *p* is provided for emptying the oil, and *q* is the feed-pipe, for conducting the oil to the burner, containing the valve *r* and regulator *s*. The feed-pipe passes under the cylinder cover and up the central column *t* to the burner *u*. The overflow oil passes over the burner, and is collected in the cup at its bottom, and conducted by a pipe *v* to the strainer *w*, composed of a fine plate of perforated tin, with fine wire gauze underneath, so that no flock or charred wick can enter the lamp cylinder. The valve *r* is cylindrical, with two apertures opposite each other, and when these are vertical the oil can pass to the burner, but, by turning the cylinder slightly round, the passage is closed, and the cylinder cover may be taken off—only the oil contained in the valve being spilt—when the cross filter can be cleaned, or removed and replaced by another, the whole being easily readjusted in a couple of minutes. To prevent the tendency to draw down the oil from the burner during the winding up, a self-acting spherical valve *x*, of some light material, is placed over the cylindrical one, so as to close whenever the piston begins to be raised, and remain so till the piston is released. The regulator *s* consists of a conical point which enters the feed-pipe, the distance it enters being regulated by a fine-threaded screw, and facilitates the regulation of the overflow. An index is placed so as to enable the light-keeper, by inspection, to know the position of the regulator. Safety fountains are sometimes sent with these lamps, so that in case of an accident to the main lamp they can be filled with oil and set to work in a few minutes, by coupling their supply-pipe to the union joint *y* of the lamp. The burners are screwed to the central column by the union joint *z*, and they are further steadied by a holder clipping the cup of the burner, which is of brass, accurately turned. By unscrewing two screws the burner can be detached and replaced by another always kept ready in the light-room. The burners are interchangeable, and are all made to standard gauges, the concentric holders for the wicks being of sheet iron, brazed, and then tinned. Each wick has two small feed-tubes, one on each side, so as to ensure an abundant supply of oil. The bottom of the burner is movable, so that access can be had to the interior, for the purpose of cleaning the supply-tubes. A chimney-holder of brass fits over the burner, and its position is regulated by means of a couple of racks and pinions, to enable the light-keeper to place the shoulder of the chimney at the proper height, a point of great importance in the production of a good flame. The wicks are raised by small racks and pinions fitted to each wick-holder, and a number is conspicuously placed on the thumb-screw of each, referring to the number of the wick. To produce a good flame it is necessary to have an overflow of from three to four times the consumption and the greatest care must be taken to light up slowly, so as not

5103.

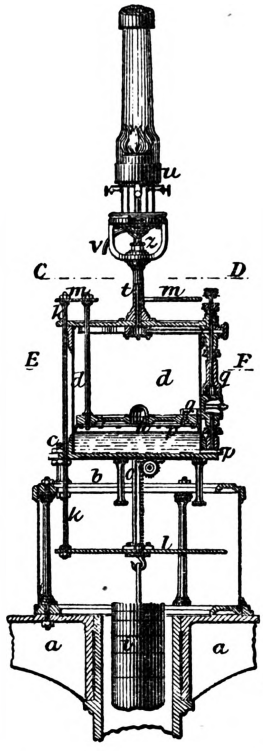

5104.

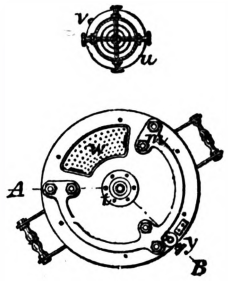

5105.

5106.

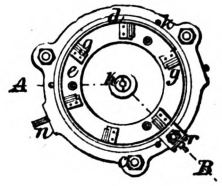

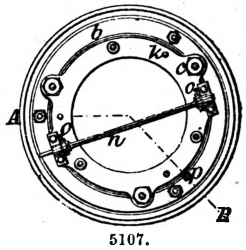

5107.

to char the wicks. With care a good flame may be kept up for seventeen or eighteen hours without trimming. For harbour lights, moderator or fountain lamps are generally used, and sometimes the reservoir is placed over the apparatus. A good overflow, however, should be maintained, as in the sea-lights, otherwise the wicks char, and after a few hours cease to give a good flame. A damper tube is placed over each chimney, and the ventilating tube generally employed is the one introduced by Faraday with such excellent results. The chimneys are of flint glass, about $\frac{1}{16}$ in. thick, carefully annealed, and it is important to give the correct form to the shoulder, so as to ensure the production of a good flame, and to obstruct as little light as possible.

Figs. 5108, 5109, are side and end elevations of a First Order clockwork, consisting of two trains of wheels, one for driving the apparatus, and the other for driving a fly-wheel with adjustable vanes

5108.

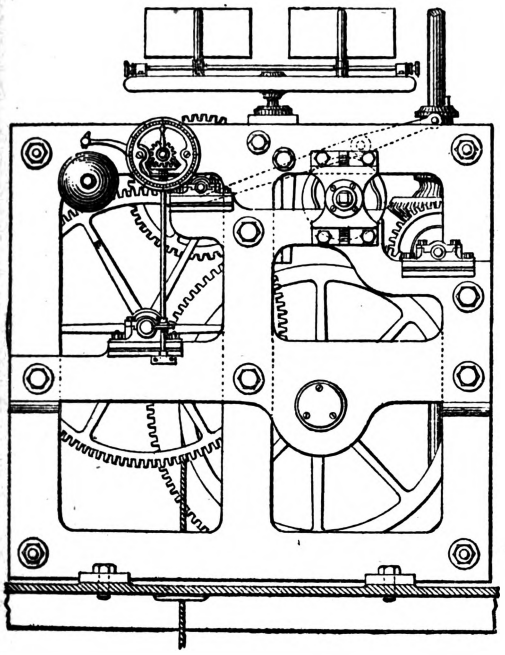

5109.

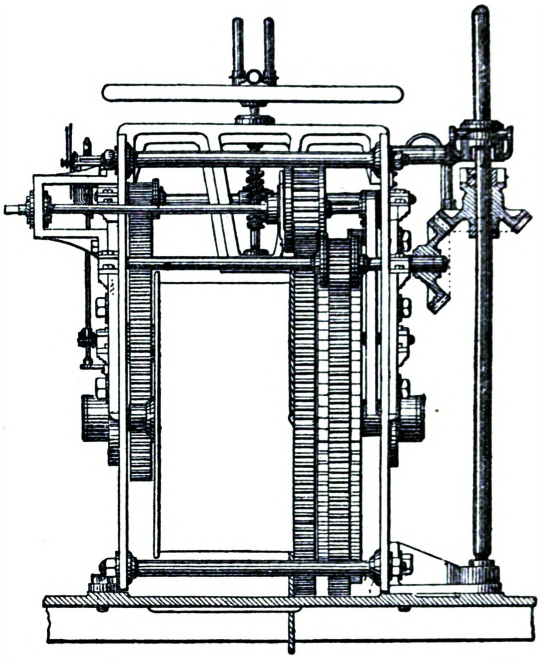

for regulating the speed. The driving weights are suspended by a rope wound round a barrel. Experience has proved that the wide barrel was objectionable, as the weight could not be passed directly down a small central column; the rope wore out rapidly, and frequently let the weights fall; the method of driving the fly-wheel absorbed a large amount of power, and caused difficulty in keeping the apparatus at its correct speed. To obviate the first two of these objections, Henderson introduced a chain working in a toothed pulley, enabling the weight to be passed directly down a central column. The chain was durable, and not affected by moisture like the rope. The pulleys and chains employed were similar to those made for Weston's differential pulley blocks. This method has been used in many clockworks, but it requires great accuracy in the size of the links of the chains, otherwise slight jars are produced when the links leave the pulley. All the advantages of a chain might be got from a wire rope with Fowler's clip-drum. By employing an endless chain or wire rope, a constant driving power is obtained, which is not the case with an ordinary barrel arrangement. To obviate the third objection, recourse was had to the French plan of driving the fly-wheel, by means of a bevel-wheel gearing into a small bevel lantern pinion on the fly-wheel shaft. There is, however, no necessity for a fly-wheel, which is replaced in most of the French clockworks by a self-acting governor on the Fresnel or Foucault system. An indicating hand is arranged to make one revolution an hour when the clockwork is going at its proper speed, so as to admit of comparison with the light-keeper's clock. A small supplementary weight was sometimes used to maintain the clockwork at its correct speed during the winding-up, but the plan was not self-acting, and required space for the falling of the weight.

Buoys and Beacons.—Floating beacons may be divided into two classes, according to the service for which they are designed;—

Beacon buoys, which are placed in exposed situations, to mark the position of sunken rocks, sandbanks, wrecks, or similar matters dangerous to navigation.

Channel buoys, which are used for defining the navigable channels of rivers.

It is of essential importance that all buoys, but more especially those used for sea-marks, should be conspicuous in all states of the weather; and for this purpose,

The superstructure should be erect, well raised above the surrounding water, and presenting a considerable breadth of surface, so as to be conspicuous at a distance. Hence stability is an essential quality.

The buoy should present a steady object to the view, and be as free as possible from rolling, and more especially from abrupt pitching, which not only tends to snap the mooring chain, but

also prevents the seaman from deciphering any name or characteristic mark which may distinguish the buoy, and define its position on the chart.

The earliest buoys were, probably, barrels or large casks, and this form is still retained in channel buoys. When the barrel buoy is made of iron, the ends, instead of being square, are slightly rounded, so that the buoy resembles a woolpack rather than a cask. The barrel buoy is strong, and it is simple in construction, but from its low elevation above the surrounding water, it does not fulfil the most important requirement of a good sea-mark.

The can-buoy was formerly a favourite shape; it was at first always constructed of timber staves like a cask, but latterly, also of iron plate. When a can-buoy has the name of the sandbank or rock which it marks painted upon it, it is necessary to ballast one side with a small cast-iron keel, so as to ensure the name remaining uppermost. The can-buoy is not of a conspicuous form, nor does it possess any characteristic good quality which merits its being longer retained as a beacon.

The next class of beacon buoys is characterized by a lofty superstructure, of which the cone may be considered the typical form, the body of the buoy being symmetrically disposed around a vertical axis. When the necessity for large floating beacons first arose, it may readily be conceived that a boat with a cask, or other conspicuous mark fastened to the mast, suggested itself. Wooden spars, springing from the gunwale of the boat, meet together at an apex on the mast, and present the outline of a limpet shell. A globe and bell are attached to the mast. This form of beacon is now being superseded by others specially adapted for the purpose.

Another form of beacon, still sometimes used, consists of a spar, passing through a float, or raft of solid timber, called a deadman. The spar is moored near its lower end, so that it floats vertically, and a globe or barrel may be attached to its summit.

Of beacons specially adapted for the purpose, the nun-buoy first claims attention. In its original form, it presented the appearance of two cones attached by their bases. The egg-bottomed buoy is an improved modification of the nun-buoy. Its superstructure, which is conical, like a church spire, is formed of sheet iron, riveted to a malleable or cast-iron bottom of a hemispherical form. This buoy possesses some good qualities. It is simple in construction, and so long as the sea is calm, it is tolerably conspicuous, having a lofty, though narrow superstructure, well raised above the plane of flotation, and held in an upright position by the combined weight of the metal bottom and the mooring chain. But in a tideway, or under the influence of wind, it inclines over at a considerable angle from the perpendicular, and when the waves rise, it rolls and pitches violently, so as to become an indifferent sea-mark.

One great defect of the nun, or egg-bottomed buoy, is its want of rigidity, arising from the shape of the bottom. This defect is remedied in the buoy represented in Fig. 5110, which is made of iron. It is very buoyant, and presents a far more conspicuous object than the barrel buoy, which it has superseded in the river Liffey. The bottom is either flat or slightly coned. Flat-bottomed buoys are, however, ill adapted for the open sea, as they are only slightly immersed, and are consequently easily boxed about by the waves, which make them roll violently in rough weather; but this perhaps is of little consequence in the inner waters of a harbour.

5110.

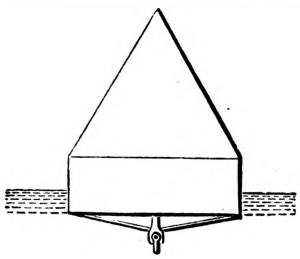

The qualities of stability and steadiness in connection with others of great importance, such as simplicity of construction and consequent cheapness of manufacture, are combined in B. B. Stoney's keel-buoy, Fig. 5111. The superstructure may be of any of the ordinary forms, but the dome-shape is preferable as being the most conspicuous. It will be observed that the sides are prolonged below the bottom, so as to form a circular keel, within which a large body of water is retained, so that a buoy 6 ft. in diameter, with a keel of 18 in., contains within the latter a body of water exceeding a ton in weight, or a mass of water of nearly the same weight as the buoy. A buoy 8 ft. in diameter, with a keel of 20 in., contains upwards of 2 tons of water within the keel. A few air-holes are pierced in the keel, just underneath the bottom, for the purpose of letting the air escape on first floating the buoy. Thus, by a very simple arrangement, the floating mass is virtually doubled, or even further increased, if desirable; and the buoy is consequently less liable to be tossed about like a cork on the waves. Again, the bolt of the mooring chain, where it passes through the mooring ring, divides the surface exposed to lateral pressure into equal or nearly equal portions. Hence the keel-buoy floats erect in tideways or rivers, however rapid; for equal pressure is exerted both above and below the centre of mooring. The keel also gives this buoy a much greater hold in the water than is the case with other buoys. A sudden blow of the wave is resisted, as has been shown, by the inertia of the enclosed mass; but it is also resisted by the reaction of the water against the outside of the keel, especially when the buoy receives a sudden blow above the plane of flotation, a frequent occurrence in a chopping sea. Hence the tendency to pitch is diminished.

5111.

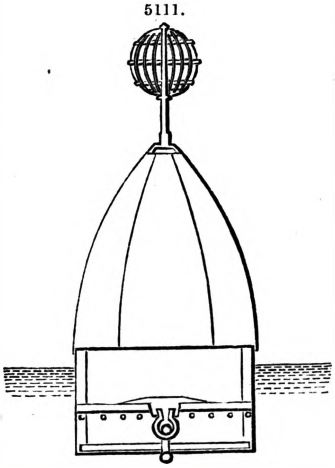

A buoy, 9 ft. in height not including the keel, and 6 ft. in diameter, projects 7 ft. 6 in. above the water; and in general, a keel-buoy may have a superstructure 25 per cent. higher than that of other buoys of equal diameter, with the same configuration above water. A keel-buoy of the size

mentioned weighs 23½ cwt., and will, however, even before the mooring chain is attached, support the weight of an ordinary man on the summit with only a slight inclination from the perpendicular.

Works on this subject;—Smeaton (J.), 'Eddystone Lighthouse,' fol. 1813. Stevenson (R.), 'Account of the Bell Rock Lighthouse,' royal 4to, 1824. Stevenson (A.), 'Account of the Skerryvore Lighthouse,' royal 4to, 1848. Stevenson (A.), 'Construction and Illumination of Lighthouses,' 12mo, 1850. 'Report on Lights, Buoys, and Beacons,' 2 vols. folio, 1860. 'Reports from the U. S. Government on Lighthouses,' 8vo, various years. Reynaud (L.), 'Mémoire sur l'Éclairage et le Balisage des Côtes de France,' 4to and folio, 1864. Stevenson (T.), 'Lighthouse Illumination,' 8vo, 1871. See also numerous papers in the 'Minutes of the Institution of Civil Engineers,' and in the 'Annales des Ponts et Chaussées.'

LIMES, MORTARS, AND CEMENT.

All calcareous cements have lime as their basis, mixed with various other materials in different proportions, and lime is most usually found combined either with carbonic acid, in which state it forms a considerable portion of the earth's crust, or with sulphuric acid, when it is called gypsum.

The cement formed of gypsum, termed plaster of Paris, has hitherto been seldom used in architecture, except for ornamental purposes, protected from the weather.

Carbonate of lime is found either pure, that is, consisting of 436 parts carbonic acid to 564 of lime; or, mixed with alumina, silica, magnesia, or oxide of iron, in varying proportions. If a piece of carbonate of lime is calcined, the carbonic acid will be drawn off in the process, and the cohesion of its particles will be so much lessened, that granular limestone, if very pure, will fall to powder in the kiln wherein it is burnt. The lime after calcination becomes quite white, or light brown, whatever was its former colour. In this state it has lost its affinity for carbonic acid, and is termed caustic or quick lime.

Quick-lime, on being mixed freely with its equivalent of water, slakes, that is, throws out great heat, swells, and assumes the form of a fine white powder. This is hydrate of lime, in which state the affinity for carbonic acid is restored; but though at first it quickly absorbs carbonic acid from the air, the process gradually becomes slower, and it has never been found to have recovered its full equivalent. Lime, in recombining with carbonic acid, parts with the water it combined with in forming a hydrate.

To form a cement with hydrate of lime, it must be mixed with sufficient water to make a paste of the consistency required. After having been applied as a cement in this plastic form, in order that it may set, or recover its original hardness when in the form of a carbonate, it would seem necessary only to subject it to pressure, and in some cases give it access to the carbonic acid of the air.

Lime is besides usually mixed with sand, gravel, or some such extraneous matter previous to use; and their mixture, when formed into a paste with water, is termed mortar.

The distinction between the mortars made of pure and those made of impure carbonates of lime consists in this, that the former have in themselves no property which can produce setting without the presence of carbonic acid; that is practically without exposure to the air. Mortars made from impure carbonates, on the other hand, contain within themselves to a greater or less degree this property of solidifying without the assistance of the atmosphere. From this property, which enables them to harden under water, they are called hydraulic limes or hydraulic cements.

As pure lime mortar must combine with carbonic acid, that it may harden or set, and as in this combination it must part with the water contained in it, it follows that hydrate of pure lime in a state of paste, if kept moist, will remain for an indefinite period without absorption of carbonic acid, and consequently fit for use as a cement; whilst if exposed to the dry air without pressure, the small quantity of carbonic acid gas is gradually absorbed from the atmosphere; but the lime assumes the form of powdered chalk or marble, which is wholly useless as a cement, no longer forming paste with water.

It is evident, then, that for all buildings having any pretensions to importance, it is advisable to use mortar made from hydraulic lime: and where this is not to be found in a natural state, to try to produce it artificially by mixing with the carbonate of lime the ingredients which are wanting to give it hydraulic properties.

All the ingredients of the carbonated and silico-argillaceous varieties of calcareous substances are among the commonest elements of sedimentary rocks, and are thus subject to the general phenomena of deposition.

As few engineers have the means of performing for themselves the ordinary processes of analyzing limes, the following is given as a simple practical mode of testing a stone supposed to contain hydraulic lime or cement;—The stone ought to be bluish grey, brown, or of some darkish colour, as white indicates pure limestone or gypsum. On being touched by the tongue, the presence of clay ought to be quite perceptible to the taste. It should also be detected by its smell after wetting. It should only partially dissolve in diluted acid, leaving a more copious sediment than pure limestone. This may be considered the first chemical test. Should this test be satisfactory, break the stone into fragments not exceeding 1½ in. thick, and put a few of these into an ordinary fire-place, first heating them gradually, that they may not break into too many small pieces, and keep them to a full red heat for about three hours. Take out one of the fragments, and put it into a glass of diluted hydrochloric acid. Should the stone be just sufficiently calcined, no effervescence will take place, and its original colour will remain unchanged, any effervescence showing that the stone is not sufficiently burned. Should the stone be overburned, on taking it out of the fire, it will be of a darker colour than before. Having obtained a piece properly calcined, pound it to an impalpable powder, being very careful not to allow any grittiness to remain. Mix this powder with a moderate quantity of water, by means of a spatula or strong knife, on a slate or slab, and knead it into a ball between the hands. It will soon become warm; and, if it be a good hydraulic cement, it will not only harden in the heating, but if put into a basin of water it will continue hard, and go on hardening. It is better not to put it into water until it has begun to cool a little.

The proper proportion of water is between one-fourth and one-half; the addition of a larger

quantity making a very thin paste, which will take much longer to set, although ultimately the slow-setting ball will become as hard as the others. A great excess of water will, however, destroy the cement. The balls should be allowed to remain in a basin of water for a long time, taking one of them out at intervals of ten days for a month or two, and noting the hardness of their interiors. As a saturated solution of lime water would be very soon formed in the basin, the water should be changed daily, in order to ascertain the full value of the cement.

For practical purposes, Vicat's division of limes may be well adopted as follows;—

1. Fat, or common lime, which gains no consistency under water, remaining in a state of paste in water unchanged, but dissolving wholly in pure water frequently changed.

2. Poor lime, which is a combination of lime and sand, the lime in which exhibits the same phenomena, as if no sand were present.

3. Slightly hydraulic limes obtained from limestone containing 8 to 12 per cent. in all of silica, alumina, magnesia, iron, and manganese. These set in about twenty days after immersion, but in a year have not gained a consistency greater than hard soap. They dissolve in pure water, but very slowly.

4. Hydraulic limes from limestones containing from 12 to 20 per cent. of the above-mentioned ingredients; these set in from six to eight days, and in six months acquire the hardness of soft stone.

5. Eminently hydraulic limes from limestones containing 20 to 30 per cent. of the same ingredients; they set in from two to four days, and have attained great hardness in a single month. In six months they resemble the absorbent calcareous stones which bear cutting. They splinter under a blow, and present a slaty fracture.

6. Hydraulic cements from stones containing 30 to 50 per cent. of argil; these set in a few minutes, and attain the hardness of stone in the first month.

The above classification must be regarded as only approximately correct, since the hydraulic energy of limes varies with the value of the clay and the temperature at which the limestone is burned. A large proportion of iron and alumina, as compared with the silicic acid, greatly facilitates the action which takes place in calcination, and the prepared mortar also sets much more quickly. Thus Roman cement, in which the quantity of iron and alumina together nearly equals the silicic acid, is burned with little fuel at a low temperature, and the prepared cement, if fresh, sets in a few minutes. The Portland cement, on the other hand, in which the iron and alumina is less than half of the silicic acid, is burned at a very high temperature, and the cement should take as many hours to set as the Roman takes minutes.

Allusion has been made to the existence of ingredients which, mixed with pure limes, make hydraulic mortars. Of these, the two principal natural ingredients are puzzolana and trass. The former, a volcanic dust from the neighbourhood of Mount Vesuvius, in Italy, was used as early as the time of the Romans, as we find from Vitruvius; it was not used in England until Smeaton employed it in building the Eddystone Lighthouse. Trass is a similar volcanic product, found near Andernach, on the Rhine.

The chief ingredients of both of these are burnt silica and alumina; and, in imitation of them, many artificial compounds of clay have been formed, and are largely used. These are frequently termed artificial puzzolanas.

Lime Burning.—Lime kilns may be divided into two classes,—intermittent or flare kilns, in which the fuel is all at the bottom and the limestone built up over it; and running or perpetual kilns, in which the fuel and limestone are built in a similar way to that in which bricks are burned in a clamp. In the former, one charge of lime is burned at a time; and when the burning is complete the kiln is cleared out previous to burning a second; while in the latter, fresh strata may be constantly added at the top as the calcined lime is withdrawn from the bottom. In the intermittent kiln, the limestone charge rests upon arches of the same material, rudely constructed of large pieces laid dry. A small fire is lighted below these arches, and quite at the back; this is gradually increased towards the mouth as the draught increases. The opening is then regulated to secure the proper degree of combustion, new fuel is added to keep it to that point, while the air which enters by the fire-door carries the flame to all parts of the arch, acting in the manner of a reverberatory furnace, and gradually bringing the whole to a state of incandescence. Care must be taken in forming the arches that the stones of which they are formed are not such as will crack and burst with the application of heat; as they might cause the arch to give way, and the charge to fall in. The perpetual kiln is the more economical of the two in fuel, but at the same time is more difficult to manage. A mere change in the duration or intensity of the wind, a falling in of the inner parts of the charge, an irregularity in the size of the lumps of limestone used, may all be sufficient to alter the force of the draught, and to cause an excess or deficiency of calcination. A change in the quality of the fuel used will also evidently alter the time of burning; and sometimes a kiln of this description, after working for some time very well, suddenly becomes out of order without any apparent reason. So that the management of such a kiln must be an affair of experience and caution alone; but, notwithstanding the precautions required, the perpetual kiln is one very largely used.

The fuel used for kilns depends on the products of the country or district in which they stand. In England coal and coke are the only two fuels ever used. If any use can be made of the distillation of the coal, there is then an evident advantage in using coke; for the gases which the latter gives off arrive at once at their highest degree of temperature, while this temperature is only arrived at with the former at the end of this combustion, when in fact the coal is coked in the kiln. The quantity of smoke that escapes from the kiln while the coal is being burned may be taken as an indication of the combustible wasted. A kiln in which coke is the fuel will yield nearly one-third more calcined lime in a given time than one in which coal is used.

In many countries wood is the only fuel; in others wood, charcoal, and dried cowdung are the ordinary fuels. The varieties of wood of course vary with the resources of the locality. Dried

cowdung gives a slow smouldering fire, and is not a good fuel where great heat is required to calcine the limestone.

The shapes given to the interiors of kilns are very different. The object sought is to obtain the greatest uniform heat possible through the smallest expenditure of fuel, for which purpose thick walls are necessary to prevent radiation.

Figs. 5112, 5113, are of an upright rectangular prism, used in the South of France to burn both lime and bricks; the lower half of the kiln being full of the former, and the upper half of the latter, packed edgeways. This is not a construction to be recommended. Figs. 5114, 5115, are of what is termed a field kiln, and is designed for temporary use, where a large quantity of lime is wanted in a short time. It consists of an oven-shaped vault, of limestone, upon which a stack of the same material is built up in a cylindrical form. The whole is then surrounded by a wall of beaten earth, and supported outwardly by coarse wattlings. According to Vicat, in this kiln a cubic yard of lime requires from 1·64 to 2·23¼ cub. yds. of oak as fuel. Figs. 5116, 5117, are a form of kiln proposed by Vicat in order to ensure the upper part of the charge being properly burned without the lower part being overburned; a matter of great importance in the case of argillaceous limestones, which vitrify and become useless from overburning. To the height of 6½ ft. it is cylindrical, above which is a conical hood of 9 ft. 10 in. in height, truncated at the vertex so as to leave an opening of about

5112.

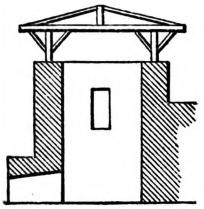

5115.

5118.

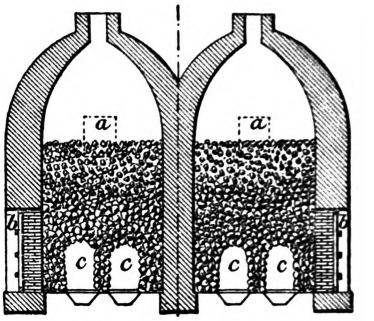

5116.

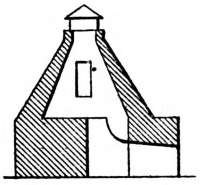

5113.

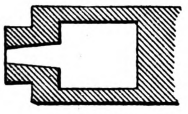

5119.

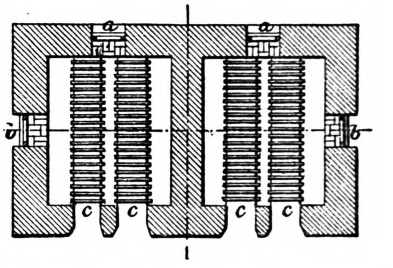

5114.

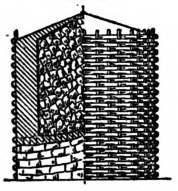

5117.

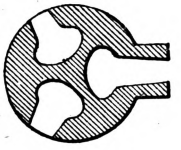

2 ft. for the escape of the smoke. The lower part is divided either into two rounded chambers, with partitions of 9 ft. 10 in. high, or into three chambers with partitions 8½ ft. high. The object of these arrangements is to avoid angular parts, where calcination always proceeds badly; to keep up the intensity of heat in the upper part of the kiln, in a way that could not be done in either of the kilns, Figs. 5112, 5114, whose walls are vertical. The partitions are intended to be adapted for the alternate calcination of the lower strata without the discontinuance of it in the upper. First, the fire in one partition is lighted and allowed to burn for two days; towards the close of that time a second fire is lighted, and the first gradually slackened, by closing the aperture; towards the end of two days more the third fire is lighted, and the second diminished, so that the upper part of the kiln will have undergone six days direct heat, while each of the lower chambers will have only had two days of more intense heat.

Figs. 5118, 5119, show a plan and cross-section of a common form of flare kiln, used for burning chalk lime on the river Medway, Kent, the fuel used being coal. These kilns are generally built in pairs, as two charges freight one river barge. *a* is a large aperture where the chalk is thrown in, the ground being higher behind; *b*, the door where the lime is taken out; *c c*, the furnaces, the bars going right across the kiln. The inside of the kiln is lined with fire-bricks, set in a mixture of equal parts of brick earth and sand, termed pug. The chalk is built over the fire-bars in two arches about 4 ft. high. Round these arches are laid large lumps of chalk, and then over these smaller pieces to the spring of the arch, packed closely in at the top. The apertures at *a* and *b* are then bricked up, and large shutters affixed to them.

When the fagot has ignited the coal, the volumes of smoke given off are apt to cause a great deal of soot to form in the kiln. This checks the draught, and to get rid of it a gun-barrel loaded with powder, and attached to a long iron stock, is from time to time forced into the centre of the furnace. The heat ignites the powder, and the explosion shakes down the soot. The lime takes sixty hours to burn, and twenty hours after they have ceased to put in fuel the lime should be cool enough to admit of its being taken out. The volume of the charge diminishes as the kiln burns; the out-turn for a pair of kilns being from 110 to 120 cub. yds. The fuel required for this quantity is 9 tons of coal, and an allowance of 1 or 2 lbs. of coarse gunpowder.

It is usual, if possible, to build kilns on the face of a steep bank, so as to be able to cart the limestone and coal up to the top, and thence to fill the kiln, and to withdraw the burned lime from the bottom.

Slaking Lime and forming Mortar.—The methods employed for slaking lime have been generally divided into three heads. The first consists in throwing on the lime as it comes from the kiln enough water to reduce it to thin paste. Too much water is generally added, and the lime is drowned, the slaking being checked. The second method of slaking consists in flinging quick-lime into water for a few seconds, and withdrawing it before the commencement of ebullition. The operation is performed by baskets, into which the lime, broken into pieces about the size of an egg, is placed. After being taken out of the water it is thrown in a heap, and allowed to fall to a powder. This method of slaking has been found to be attended by various practical inconveniences, the chief of which is the difficulty of getting the workmen to hold the lime precisely the right time under water. The third process is called air slaking, leaving the quick-lime exposed to attract moisture from the surrounding atmosphere.

It seems to matter little whether pure lime is slaked in large or small quantities at once; but with hydraulic limes only so much should be slaked at a time as can be worked off within the next eight or ten days. In order to make sure that the lime has entirely lost its affinity for water before being laid as mortar in the joints of a building, it is safer to leave hydraulic limes for from twenty-four to forty-eight hours after slaking, before making them into mortar. For want of this precaution, mortar has been known to expand and to burst even the heaviest masonry. Twelve to twenty-four hours is long enough for pure or feebly hydraulic limes; they should be left covered up during that time. Hydraulic limes should be used as fresh as possible from the kiln, and as they slake with difficulty they should be ground first, to ensure of the operation being done perfectly. Hydraulic cements do not slake at all. They should be ground to fine powder and made into mortar either in a pug-mill or by hand in small quantities, being mixed with water only when required for use; taking care not to let them remain too long in that state, as they at once begin to harden.

The quantity of water required to be thrown on the lime varies with the density and purity of the lime and its freshness: but generally speaking it will lie between $\frac{1}{3}$ and $\frac{1}{2}$ the bulk of the lime. With pure and fresh-burned lime more water is evaporated by the heat produced, than with a stale, or hydraulic lime.

The following Table shows the volumes of dry powder and lime paste produced from 1 measure of quick-lime, the volumes of water necessary, and the percentage of clay in each case;—

Designation of the lime of which the volume is taken as unity.	Volume of water used to bring it to a state of powder.	Volume produced of dry powder.	Volume of water used in all to bring to a state of paste.	Volume produced in a state of paste.	Percentage of clay in each.
1. Lime of white marble	$\frac{1}{2}$	$2\frac{1}{2}$	$1\frac{6}{10}$	$1\frac{1}{2}$	0
2. Fat lime of Strasburg	$\frac{1}{2}$	$3\frac{1}{2}$	2	$1\frac{3}{4}$	0
3. Metz lime	$\frac{1}{2}$	$2\frac{1}{3}$	$1\frac{1}{6}$	$1\frac{1}{20}$	22·8
4. Yellow lime of Obernai ..	$\frac{1}{2}$	2	$\frac{3}{4}$	1	13·3
5. Boulogne cement	$\frac{1}{3}$	$1\frac{1}{6}$	$\frac{1}{2}$	$\frac{3}{4}$	46

It will be observed from this Table that the volumes of powder and paste produced by slaking, and the volumes of water required for the operation, are each less as the quantity of the clay present is greater. When the quantity of clay in the lime is small, the lime sufficiently predominates over it to produce by its affinity for water a violent action. Heat and vapour is thrown off, and the lime expands and falls into powder much more freely than it does in limes highly hydraulic. The cement made from Boulogne pebbles is highly hydraulic, and does not really slake at all.

Burnell makes the following important observation regarding the calcination and slaking of different limestones. "Those which are obtained from the stones containing much silica in the composition of the clay, swell in setting, and are likely to dislocate the masonry executed with them. On the contrary, those in which the alumina is in excess are likely to shrink and crack. The magnesian limestones or dolomites appear to be the least exposed to these inconveniences, and to retain without alteration their original bulk."

Sand is generally mixed with lime, however, for the sake of economy; and for ordinary purposes any good lime will stand the admixture without its properties being seriously impaired. It remains to be considered, how much sand may be thus safely used, and what kinds of sand are the best.

Theoretically the best wall is that in which the cementing material is just as strong as the brick or stone cemented. There is evidently no object in having the cement stronger; but up to the point of equal resistance, the strength of the whole wall will vary with that of the cement. In the case of fat lime, the strongest mortar that can be made of it bears such a very small proportion to the strength of a brick, that it matters comparatively little what proportion of sand is used with it. If there is much saving effected in price, 3 of sand may be used to 1 of lime, and the resistance of the mortar formed would only descend to $\frac{1}{20}$ of that of the brick. But as has been said before, such a mortar should never be used at all. With feebly hydraulic limes $2\frac{1}{2}$ cub. ft. of sand may be mixed with 1 cub. ft. of lime, and the results will be a mortar of $\frac{1}{6}$ or $\frac{1}{7}$ the resistance of brick. With hydraulic lime of good quality, such as lias lime, $1\frac{1}{2}$ to 2 parts of sand may be used to 1 part of lime, but this is the limit.

For hydraulic works and foundations, equal portions of lime and sand should be the limit allowed.

There is much difference of opinion as to what sand is best suited for mixing with lime. Vicat concluded that the advantage of the three different descriptions of sand employed by him varied with the nature of the lime. He calls coarse sand, those whose grains, supposing them round, vary from $\frac{1}{17}$ to $\frac{1}{5}$ of an inch in diameter; fine sand, where the grains vary from $\frac{1}{25}$ to $\frac{1}{17}$ of an inch in diameter; and according to this statement ranked their superiority with limes as follows;—

	1st.	2nd.	3rd.
For eminently hydraulic limes	Fine.	Mixed.	Coarse.
For slightly " "	Mixed.	Fine.	Coarse.
For fat limes	Coarse.	Mixed.	Fine.

Powder, especially when derived from calcareous substances, he found to make excellent mortar both with hydraulic and eminently hydraulic lime. He considered that the greatest difference in the hardness of mortars of fat limes, which the use of this or that kind of sand is capable of occasioning, rarely amounts to more than $\frac{1}{5}$, but it exceeds $\frac{1}{3}$ with the mortars made from hydraulic or eminently hydraulic lime. That is, if the maximum hardness in the two cases be 100, the minimum will not be far from 80 in the first case, and 60 in the second.

The general opinion of writers has been that pit-sand is better than river-sand. It is usually rougher and more angular; and whether rightly or not, it is certain that these qualities are valued by most practical builders.

Sea-sand has been condemned by most writers as the worst that can be used. Smeaton in building the Eddystone Lighthouse found mortar made with salt water just as good, if not better, than that made with fresh; so that in his case we may suppose sea-sand impregnated with salt would have made equally good mortar as fresh-water sand. Davy, in his 'Treatise on Foundations,' remarks, "it is almost unnecessary to observe that washed sea-sand will produce precisely the same effects as the best river-sand."

It is probable that the difference of opinion on this subject may arise from the different kinds of lime that have been used. Fat lime will not harden if kept damp; and the presence of salt in the mortar will always keep it so. Hydraulic limes, on the other hand, harden all the better, though not so quickly, from being kept damp; and it is therefore reasonable to suppose that in their case sea-sand is not prejudicial. For internal plastering sea-sand is evidently unfit, on account of the moisture which keeps exuding from it, disfiguring its appearance, and making the room plastered damp and unwholesome.

All writers are agreed that sand should be clean. This is a most important point, and one by no means sufficiently attended to. Good mortar can never be made where the sand is filled with earthy and loamy particles, and the fact of these particles being argillaceous adds nothing to their advantage. Treussart recommends that sand should be washed in masonry basins from 7 to 10 ft. wide, from 12 to 16 ft. long, and about 2½ ft. deep, laid about a foot thick, water let over the sand, and well stirred up. Allowing time for the sand again to sink to the bottom, the water should be suddenly let off by a sluice at one end; and the operation should be repeated till the water passes off but slightly turbid, when the sand may be considered clean.

From the conflicting opinions on the subject of sand, we may conclude that in making ordinary mortar our present knowledge and experience would not justify any great expense in order to procure sand of any particular colour or grain, or from any particular source; but that generally sand either too coarse or too fine should be avoided.

That for ordinary buildings we should, if possible, use river or pit sand in preference to sea-sand. But if any great saving is effected by using the latter, we should not hesitate to do so; taking the precaution to wash it carefully first.

That for hydraulic buildings, sea-sand is just as good as any other.

That in all cases it is worth while to take pains to clean the sand before using it, or to make sure that it is clean.

The great rule in mixing mortar is to see that the lime and sand are thoroughly and intimately amalgamated. According to some writers, continual working and beating is also essential to the making of good mortar; this, however, is doubtful. The ingredients may be mixed by hand or in a pug-mill, or what is best of all, under a wheel, or stones revolving on edge.

The first great point to be attended to in applying mortars, is the necessity of thoroughly wetting the materials to be joined. If the moisture is suddenly drawn off any hydraulic mortar it will not harden. Dry bricks and most stones absorb a large proportion of water, so that if mortar is applied to the dry surface of a brick and another pressed on it, the whole of the moisture will be squeezed out of the mortar and taken up by the bricks, and the mortar itself will crumble into powder. Whereas if the brick is already thoroughly wetted, it will be able to absorb no more moisture, and the mortar will set as it ought.

With many compact stones, such as granite or marble, it will be sufficient to water the surface at the moment of using them. But porous materials, such as sandstones and bricks, should be allowed to soak in water for some hours before use. In a series of experiments on English bricks, weighing from 5½ to 6 lbs., the average absorption of water was 12 oz. a brick.

The next requisite in applying mortar is that the mortar should be as stiff as it can be used, without inconvenience and without danger of all the unevennesses of the joints remaining unfilled when the bricks are forced home.

The third requisite is to prevent rapid drying of the mortar after it has been applied.

Mortar which is exposed to the action of frost before it has set, is so much damaged as to entirely impair its properties. In building, therefore, when the approach of frost is to be looked for, the foundations and the walls up to at least 3 ft. above the ground should be laid in hydraulic mortar, which will set rapidly; as the action of the frost is severest at the ground level. During severe frosts all building should if possible be suspended. If the walls are very thick the interiors

will generally be protected from the cold, and it will be enough to lay and point the exterior joints with cement or superior mortar.

Mortar is sometimes applied in a form termed grouting, that is, mixed with an excess of water, and poured liquid into the joints of the masonry. Good grouting can be made of eminently hydraulic lime and fine sand mixed with water, and poured immediately into the joints; it hardens instantly without shrinking, and solidifies all its water. Smeaton formed an excellent grouting of equal parts of lime and puzzolana. Grouting is, however, not generally approved of by engineers. Scott thus remarks of it,—"If the joints of a work are not properly flushed up, undoubtedly grouting is of great advantage, especially when dry bricks are employed in work, but the strength of grout cannot at all compare with that of good stiff mortar; for grout, when the water dries out, is merely very porous mortar, and the more fluid the grout, the weaker the work will be."

Much difference of opinion exists as to whether the mortar joints of masonry should be thick or thin.

In modern practice, in all masonry and brickwork where strength is required rather than ornament, thick beds and joints of good mortar will be useful. Thin bricks or tiles will also be better than thick bricks, as the material will be better burned, and consequently more enduring; more mortar can also be used, which in such work gives strength. Mortar may be used safely, and even with advantage, in thick beds, and joints in masonry for docks, for railway bridges, viaducts, and retaining walls; as also for warehouses, goods stations, cotton mills, tall chimneys, fence walls, and all similar structures. Reservoir walls, tank walls, and covering arches for waterworks, ought most certainly to have thick beds of good mortar. The proportion of mortar to rubble stonework should be about 1 to 3, that is, in 4 cub. yds. of rubble wall there should not be less than 1 cub. yd. of mortar. In brickwork with ordinary bricks the proportions will be 1 to 4. If thin bricks are used, or if very small stone is used for rubble-work, the proportions may be as 1 to 1, like some of the ancient work to be found at this day in Italy and the East, which is sound after centuries of time.

A good deal must depend on the quality of the mortar used, for if it be a slow-setting one, allowance must be made for the gradual settlement of the building; especially must this be considered in arch-work.

Lime Concretes.—The proportions in which lime is mixed with gravel, and other aggregates, depend on its quality and mode of preliminary preparation; but no accurate or safe proportions can be determined on in the absence of a true knowledge of the chemical value of the several ingredients. Rich limes are weak in cohesive and adhesive capacity, and, unless reduced to fine powder, will not bind. With such limes, therefore, it is not advisable to incorporate more than three or four parts of aggregates. The lime is usually obtained fresh from the kilns, and slaked with water, or at once mixed with the aggregate, when both are wetted and turned over together, but this is a very slovenly mode of making concrete, and should be avoided. The best plan to extract the utmost value from lime as a matrix is to reduce it to the finest powder either by slaking or grinding. When so prepared, and evenly sifted through a fine sieve, it can be applied with the most advantageous results. The water necessary for the mixture should be carefully applied in the form of a spray, either through a rose or other good distributor, and no wash or superfluity of water permitted. When lime thus carefully prepared is mixed with a favourable quality of aggregate, satisfactory results may be depended on. If the operator is satisfied that no disturbance will take place in the mass from unslaked lime, he may subject the concrete to a slight degree of pressure when putting it into the moulds or frames. As rich limes require more water than the poor ones, it is necessary to observe that there should be sufficient for their complete conversion into a hydrate, for, in the absence of the necessary quantity of moisture, the mass will have a tendency to disintegrate. These observations on rich limes for concrete making are offered for the guidance of those who may from circumstances be obliged to use them for such a purpose; but, owing to the many disadvantages attending their use, they should at all times be neglected if any better matrix is obtainable at a reasonable cost.

The poor or hydraulic limes are better adapted for concrete purposes, in consequence of the amount of silica which they contain. The blue lias varieties are the best; and when submitted to an amount of reduction which will enable them to pass through a No. 40 wire gauge, without leaving more than 5 per cent. of residuum, they will be found a cheap and advantageous matrix. Slaking, in the absence of grinding machinery, may be resorted to as with rich limes. Considerable misapprehension exists as to the desirability of keeping ground lime for any length of time before being used. The amount of injury which lime in a finely-powdered condition receives from exposure, arises from its avidity for moisture. If, therefore, the air is excluded from it, and the situation in which it is kept is dry, no injurious effect of any extent will arise. Smeaton's experience on this subject is conclusive; for he used Aberthaw lime with great success in important engineering works after it had been kept in casks for seven years. The present use of Thiel lime from France in the works of the Suez Canal, is also confirmatory of the possibility of using lime after it has been some time reduced to powder. The precaution, however, must be insisted on of keeping it in barrels well made, and their interior papered so as to exclude the air.

It is necessary here to explain the advantage which arises in treating the lime before it is mixed with the gravel or stones. Béton differs from concrete in its being subjected to two operations; first, the lime or cement is mixed with sand and treated as a mortar, to which afterwards is added the required quantity of aggregates. Concrete, however, as originally prepared in this country, only consisted of one clumsy operation of mixing the matrix and aggregate together. Hence it is more correct to say that béton is essentially a French process, and concrete the somewhat analogous one in England. In both cases the mixture is accomplished with the same object, although with a difference of detail. There can be no question that the béton process is the more perfect one, and, especially when the concrete is made into blocks or frames, offers great advantages over the other.

When, however, it is used, as in engineering works, in large masses in trenches, it involves a double operation; first, the preparation of the mortar, which is followed by its incorporation with the larger ingredients, such as gravel, broken bricks, or stone. When moulding the concrete the mortar can be used simultaneously with the gravel, and under such circumstances with beneficial effect. Its use in this way secures a solid mass, having a minimum of interstitial space. In all concretes it is necessary to adjust the proportions of lime, sand, and gravel, so that no vacuities will occur in the mixture. The larger the size of the aggregate the more necessary is it that attention should be paid to this point. With an aggregate of an average size of 2 in. it will be found that in every cubic yard there will be vacuities equal to 11 cub. ft., so that the mortar should be equal in quantity to the interstitial space. This vacant space will, of course, vary with the size or particles of the aggregate, and the amount of shrinkage will also fluctuate accordingly. When in a dry state it will shrink less than when wet in proportion to its specific gravity. A silicious or quartzose sand has a specific gravity of 2·6, and a solid cubic foot of it would therefore weigh 162½ lbs.—a cubic foot of water weighing 1000 oz. Sand of this kind, without being specially dried, when filled into a measure of a cubic foot however, only weighs 75 lbs.; showing that the space between the grains was nearly equal to their own bulk. The weight of sand of the above specific gravity may serve as a good guide or standard in estimating the amount of mortar that should be mixed with gravel for concrete; for the difference between the weight of a cubic foot of the aggregate, when pressed together, and 162½ lbs. will indicate the space to be filled. The difference should be as accurately ascertained as possible, although it is safer to have an overplus than too little of the necessary cementing material.

Roman Cement Concretes.—From the rapidity with which Roman cement sets, it is frequently employed in the preparation of concrete where much running water in foundations prevents lime or Portland cement concrete from setting quickly enough for such works. It cannot be used with a large proportion of aggregates, and is therefore seldom used for general concrete purposes. In house building with concrete it never can occupy, for the same reason, a valuable position; its quick-setting properties requiring great care to avoid the danger of disturbing its induration after the initial set has been accomplished. When necessary to use this cement for concrete, it is not advisable to mix it with more than four parts of aggregate in a dry state, and then carefully wet the mixture by a spray of water. Roman cement concrete should not on any account be rammed, as the action of the rammer would disturb the indurating action which speedily sets in.

American engineers use the natural cements for concrete, and sometimes with lime, and their experience of such a combination is most satisfactory. Gilmore recommends the following mode of preparation and use;—"Natural hydraulic cement, to which, under circumstances requiring only a moderate degree of energy and strength, paste of fat (rich) limes is sometimes added, in quantities seldom greatly exceeding that of the cement, is almost invariably used as the basis of the concrete mortar; and the concrete when made is at once deposited in its allotted place, and well rammed in horizontal layers of about 6 in. in thickness, until all the coarser fragments are driven below the general surface. The ramming should take place before the cement begins to set, and care should be taken to avoid the use of too much water in the manipulation. The mass, when ready for use, should appear quite incoherent, containing water, however, in such quantities that a thorough and hard ramming will produce a thin film of free water upon the surface, under the rammer, without causing in the mass a gelatinous or quicksand motion.

It will be found in practice that cements vary very considerably in their capacity for water, and that fresh-ground cements require more than those that have become stale. An excess of water is, however, better than a deficiency, particularly when a very energetic cement is used, as the capacity of this substance for solidifying water is great. A too rapid dessication of the concrete might involve a loss of cohesive and adhesive strength if insufficient water be used."

The composition of the compound mortar used at Fort Warren was—

325 lbs. dry cement, producing 3·75 to 3·85 cub. ft. of stiff paste; 120 lbs. Rockland lime, producing 4 cub. ft. of stiff paste; 19¼ cub. ft. of loose sand, equal to 14½ cub. ft. well compacted. These ingredients, when well mixed, made 18½ cub. ft. of good mortar.

The mortar used in the construction of Forts Richmond and Tompkins, New York Harbour, was made by hand: when required for stone masonry or concrete, it was composed of hydraulic cement and sand without lime.

"Each batch of mortar or concrete corresponded to one cask, or 308 lbs. net of hydraulic cement powder. Four men constituted a gang for measuring out and mixing the ingredients, who proceeded to the several steps of the process in the following order;—

"First. The sand is spread in a rectangular layer of 2 in. in thickness.

"Second. The dry cement is spread equally all over the sand.

"Third. The men place themselves, shovel in hand, two on each side of the rectangle, at the angles, facing inwards. Furrows of the width of a shovel are then turned outwards along the ends of the rectangle until the whole bed is turned. The two men on one side thus find themselves together, and opposite the two on the other side, having, of course, left a vacant space transversely through the middle of double the width of a shovel. They then move back to their original positions in turning furrows as before, when the bed occupies the same space that it did previous to the first turning. The turning is executed by successively thrusting the shovel under the material, and turning it over about one angle as a pivot. Each shovel thus moves to the middle of the bed, where it is met by the one opposite, when each man moves back to the side in dragging the edge of his shovel over the furrow he has just turned.

"Fourth. A basin is formed by drawing all the material to the outer edge of the bed.

"Fifth. The water is poured into the basin thus formed.

"Sixth. The material is thrown back upon the water, absorbing it, when the bed occupies the same space that it did at the beginning.

"Seventh. The bed is turned twice by the process described above. If required for masons'

use, the mortar is then heaped up, to be carried when and where required. If for concrete (the mortar occupying the rectangular space), as at first.

"Eighth. The broken stones are spread equally over the bed.

"Ninth. A bucket of water, more or less (depending upon the quantity of stones, their absorbing power, and the temperature of the air), is sprinkled over the bed.

"Tenth. The bed is turned once as before, and then heaped up for use. The act of heaping up, which is done with care, has the effect of a second turning.

"The time consumed in making a batch of mortar is a little less than twenty minutes; in incorporating the broken stones, ten minutes more.

"Where the mortar is required in very small quantities, to avoid deterioration, instead of proceeding to the fourth step of the manipulation, the mixture of cement and sand is heaped up and the water added, and paste formed with the hoe in such quantities as are required."

The composition of the above mortar was 308 lbs. of cement powder, which produced 3·70 to 3·75 cub. ft. of stiff paste, and 12 cub. ft. of loose sand (equal to 9·75 compacted or pressed). These ingredients being incorporated, produced 11·75 cub. ft. of rather thin mortar.

The above accurately-described method of hand-mixing indicates the necessity of a careful handling of natural cement, mortar, or concrete. It is only by such a reasonable and intelligent admixture that any satisfactory results can be expected. The Rosendale cement used for these mortars gave by analysis;—

Silica, clay, and insoluble silicates.	Alumina.	Peroxide of iron.	Carbonate of lime.	Carbonate of magnesia.	Sulphuric acid.	Chloride of potash and sodium.	Water and loss.
19·80	4·40	0·76	33·90	34·06	0·32	4·78	1·56

These American cements are subjected to a high degree of pulverization, being required, under strict surveillance, to pass through a No. 80 gauge sieve, 6400 meshes to the square inch, and not leave more than 8 per cent. of residuum. One solid cubic yard of raw stone yields on an average 2700 lbs., or nine barrels of cement, exclusive of those portions rejected in assorting the burnt stone.

The natural cements, so abundant in America, differ from English Roman cements in their analyses; and in no case do they approach them in setting energy. It is therefore necessary to understand that an exactly similar treatment of them for mortar or concrete would probably be attended with less satisfactory results than those obtained by the American practice. It would be better therefore to mix the Roman cement and sand first, before adding the water, which must be distributed equally through the mass until it assumes incoherency; it may then be mixed with the gravel or stones, when it will be necessary to add another quantity of water.

Portland Cement Concrete.—Whatever advantages may be derived from the practice of preparing concretes with limes, puzzolanas and natural cements—according to their cheapness or abundance—they will bear no comparison in quality to that made from Portland cement, and in all cases where practicable a preference should be given to Portland cement concrete.

Portland cement has the great advantage that it can be made of any degree of setting energy—to set in from ten minutes to two or three days. This quick setting is, however, obtained at a sacrifice of indurating strength. The practice of making Portland cement of light specific gravity is now nearly abandoned, and an average weight of 110 lbs. the imperial bushel may be regarded as the most advantageous quality. Even a lighter weight than this will suffice for ordinary concrete, if the cement is ground fine enough.

For concrete in engineering works very large proportions of aggregates have been mixed with this cement. In the sea-forts of Copenhagen the proportions were, 1 part cement, 4 sand, 16 fragments of stones.

And a very usual proportion for foundations is 1 part of cement to 10 of sand or gravel. The proportions used in the works in connection with the Houses of Parliament were 1 of cement to 4 of sand. On the Main Drainage works, where special excellence was aimed at, the cement of the finest quality was used with only 1 of sand to 1 of cement. For foundations and backing of wharf or river embankment walls, 1 of cement to from 6 to 8 of clean Thames ballast.

The mode of preparation adopted in the case of the Thames Embankment works was not calculated to extract the highest value from the cement; being the old and now obsolete method of mixing by hand and then tipping the concrete from a height into the trench prepared to receive it. The foundations were wet, and generally speaking an excess of water was used with the mass; but notwithstanding these shortcomings in its preparation the concrete attained great hardness.

In the absence of machines for mixing the materials, the usual plan adopted is to spread the stones or gravel upon a hard surface, and upon these is spread a layer of the previously-prepared mortar; the necessary amount of water is added, and the whole mass then carefully mixed and turned with rakes and hoes. There is some danger attending the supply of water, and it is advisable to thoroughly saturate the aggregate before putting the mortar on it. In all cases of concrete or mortar making, it must be remembered that the smallest possible quantity of water should be used. When a heavy and slow-setting Portland cement can be commanded it is safest, as the danger of over-wetting is reduced to a minimum. In the manufacture of granite breccia stone we have a good example of careful concrete-making conducted on the most scientific principles. A cement was selected of a weight up to 140 lbs. a bushel when it could be obtained, and with it were mixed chippings of Bath, Portland or Anston stone, obtained from the refuse of masons' yards, broken to a uniform size seldom exceeding 1½ in., to these being added sufficient small or sandy portions to fill up the interstitial space. It was made up in batches of about half a cubic yard, and all the materials first mixed together in a dry state, proportions of cement varying with the quality of the cement and the purpose for which the stone was destined. It was slightly watered with a can having a fine rose. At this stage of the process the mass was quite incoherent, and showed but slight indications of any capacity of setting, and no induration. The mixture was

then gradually and carefully put into the iron moulds, in thin layers, and rammed incessantly with heavy iron rammers. The percussion applied effected a thorough amalgamation of the mass with so small a quantity of water as to lead to a belief in the minds of the ignorant that the concrete when liberated from the moulds would be worthless. The result, however, was on the contrary most satisfactory, and large quantities of this stone were used in London and its suburbs for paving.

The moulds used for this kind of manufacture were highly finished, and strong enough to resist the pressure caused by the incessant impingement of the rammers on the yielding body of materials. The ramming was continued until the mass was absolutely solid. After fourteen days, and sometimes less, the moulds were unscrewed, and the stone carefully lifted by mechanical means—the stones made sometimes weighing half a ton. When more than ordinary strength was required, a small portion of the soluble silica of soda or potash was added; but this was quite exceptional, and it was doubtful if any increased strength was obtained.

Portland cement is occasionally used in combination with finely-sifted slaked lime, as in the case of Coignet's bétons agglomérés. In some works performed in London, at the Thames Embankment and for sewers, stone lime was used, and after being slaked with water, it was passed through an exceedingly fine sieve; the necessary quantity of Portland cement, which fluctuated according to the quality of work and its cost, was added, with fine, sharp, clean river-sand. The whole was then put into a specially-constructed pug-mill, with a small quantity of water, and thoroughly amalgamated. From the pug-mill it was at once wheeled in barrows to the work, and there spread in layers of about 6 in. deep, being carefully raked and slightly rammed. The works in question were executed during the winter, and although under such unfavourable circumstances, the centres upon which it was placed were struck in less than fourteen days without any damage to the arches. Large works have been constructed with bétons agglomérés, and many miles of sewers have been built under Paris; arches of considerable span have been built, as well as houses and churches. It is mentioned here as an instance of the advantage of well-directed manipulation effecting successful results from comparatively inexpensive materials. There was no gravel used, and the largest piece of sand was not bigger than a pea. The appearance of the work was pleasing, and closely resembled some varieties of Bath stone in texture. By such a combination—and, indeed, in some qualities of the work without any Portland cement—the danger of using an imperfectly manufactured cement may be avoided; but the cost of sifting and subsequent mixture by the pug-mill, together with the levelling and ramming, is so great as to make it doubtful if it can be used with any advantage in a locality where Portland cement can be obtained at a reasonable rate.

Mixing.—In making the various preparations described, the degree of success will much depend on the accuracy of admixture of the various materials. Until recently the operation of mortar and concrete mixing has been performed by manual labour; but the increasing magnitude of works has necessitated the adoption of mechanical mixing, with great advantage, not only as regards cost, but with considerable improvement in the quality of the mixed materials. Many ingenious machines have been devised for mixing mortar and concrete—pug-mills, horizontal, and vertical stones, with other kindred contrivances, have been used with varying success.

At the Liverpool Docks, where the mortar used in their construction obtained a justly-deserved reputation, revolving pans were used, in which heavy cast-iron rollers rotated in a contrary direction to that of the pans. At the London Docks Extension, pans 7 ft. in diameter were used, in which revolved two stones 4 ft. in diameter, having a face or thickness of 14 in., hooped with $1\frac{3}{4}$ in. cast iron. Four pans, making fourteen revolutions a minute, each charged with 7 cub. ft. of mortar, prepared 72 cub. yds. during every twenty-four hours; and it was found the space of forty minutes, or 560 revolutions, was the time of duration which realized the best and most satisfactory results in the quality of the mortar, the adhesive value of the mortar being depreciated if the revolutions were more or less than the above number. Both of these mills were driven by steam-power.

Fig. 5120 is a side elevation, partially in section, and Fig. 5121 a plan, of a mill crushing and mixing mortar. The axis of the crushing wheels j' is fixed and the motion given by a rotary bed e resting on the friction-rollers g, seen in the section, Fig. 5120. The axis k, carrying the crushing wheels j, is arranged with a vertical adjustment in the main standards c, and is with the wheels raised or lowered by means of the screws b operated by the tangent-wheels and worm n', m'. The cross shaft n, on which these worm-wheels are mounted, is driven by the corrugated friction-wheels h^2, o', connecting motion from the driving shaft h when the mill is to be filled and the wheels are to be raised, or when they are to be forced down upon the material, motion in either direction is given by means of the lever p^2 and the tumbling gearing seen in the side view, Fig. 5122. Motion is connected to the machine by means of the pulleys on the shaft h, which is geared to the vertical driving shaft on the right, by means of the bevel-wheels h', i'.

This vertical shaft is geared to the rotary bed e by means of the spur-wheel i^2, i^3, and the segment seen in the section, Fig. 5120. The crushing wheels j are kept in position on the axis k by means of the collar k^3, the key k^2, and washer k^1. The bearings of these wheels are protected from the material that falls from the top by means of the sheaths j' that are bolted to the sides of the wheels, and project beyond collars k^3 and k^1. The scrapers r' serve to collect the material in the path of the wheels, and prevent it from packing; they are held by the diagonal brackets r and standards a^3, which are bolted to the main frame.

The friction-rollers g revolve on, and are held by, the radial rods g', which are screwed into the revolving ring g^2.

Fig. 5123 is another form of mortar incorporating or mixing machine. It consists of a sheet-iron hopper A, closed at the bottom by a disc B, surmounted with a cone C, to which is imparted a quick rotary motion by the cog-wheel D. There is a rectangular opening in the hopper, 8 in. wide, the height of which can be increased or diminished by the ratchet and cog wheel F. Below the hopper is a cylindrical spout G, in which revolves a screw having iron points attached at regular intervals. Water is supplied by means of the stop-cock K, through the funnel J. Two men can work this machine by means of the crank L. If required, power can be applied by a belt to the

pulley O, and in a working day of ten hours, with half-horse power, it will mix 38 cub. yds. of mortar The motion of the screw carries the mortar while being mixed to the outlet, where it is discharged into buckets placed on the revolving platform M. By means of the crank N, the buckets pass in succession under the opening in the spouts. The materials before being thrown into the hopper are previously mixed dry on an adjacent platform.

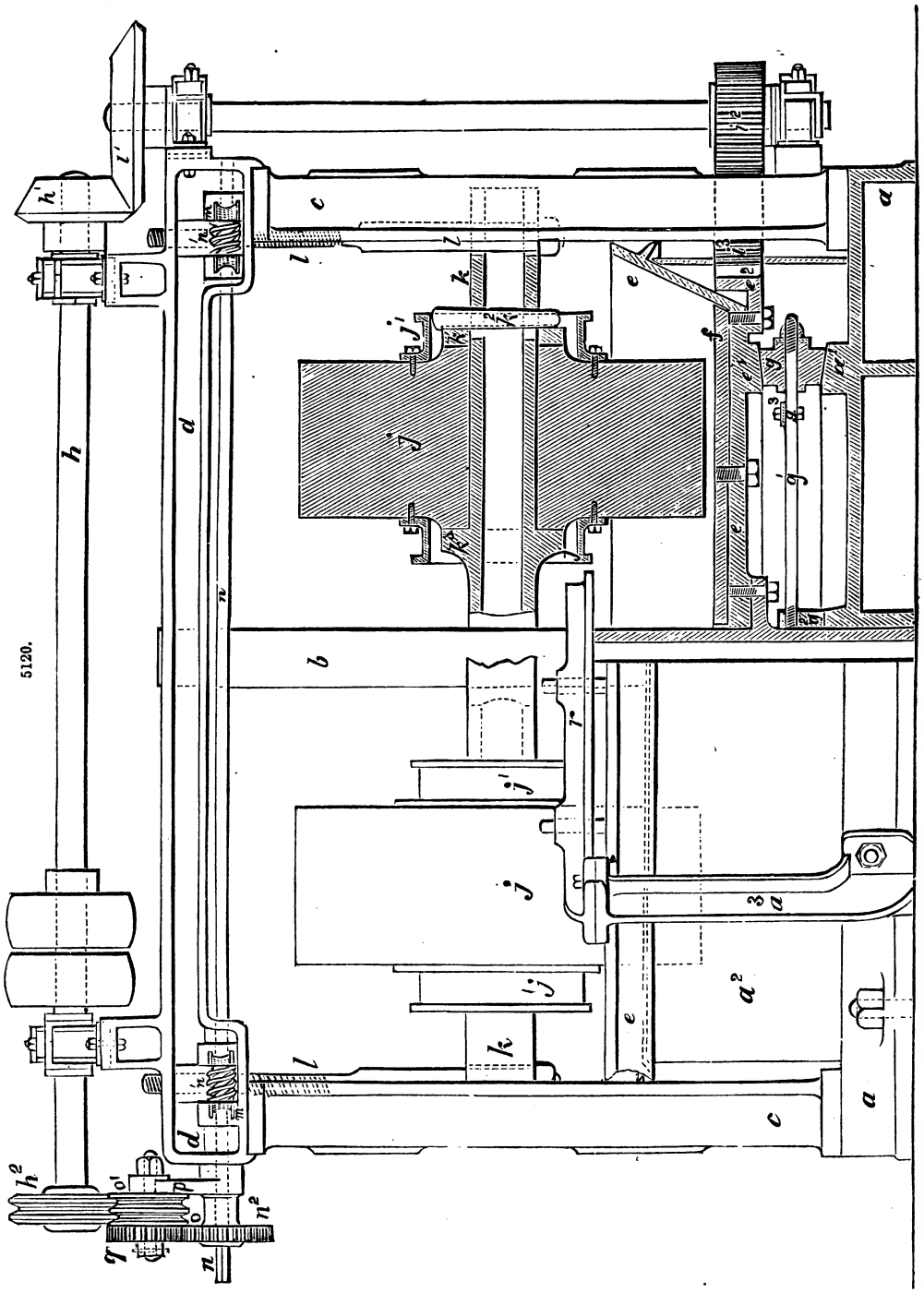

Another mixing machine used for making either bèton or concrete is represented in Figs. 5124 to 5126. A valuable feature in this machine is its portable character, which enables it to be used by hand, and can be readily transferred from one point of the works to another, avoiding the cost of moving the concrete when mixed. The requisite quantities of mortar and gravel are carefully measured and put into the machine at *a*, Fig. 5124; the levers, *b b*, Fig. 5125, are then moved, the materials fall, and in descending through the several compartments are thoroughly mixed, in

which condition they reach the bottom of the machine. If necessary the machine is moved to another spot, when it is again charged, and the same operation repeated.

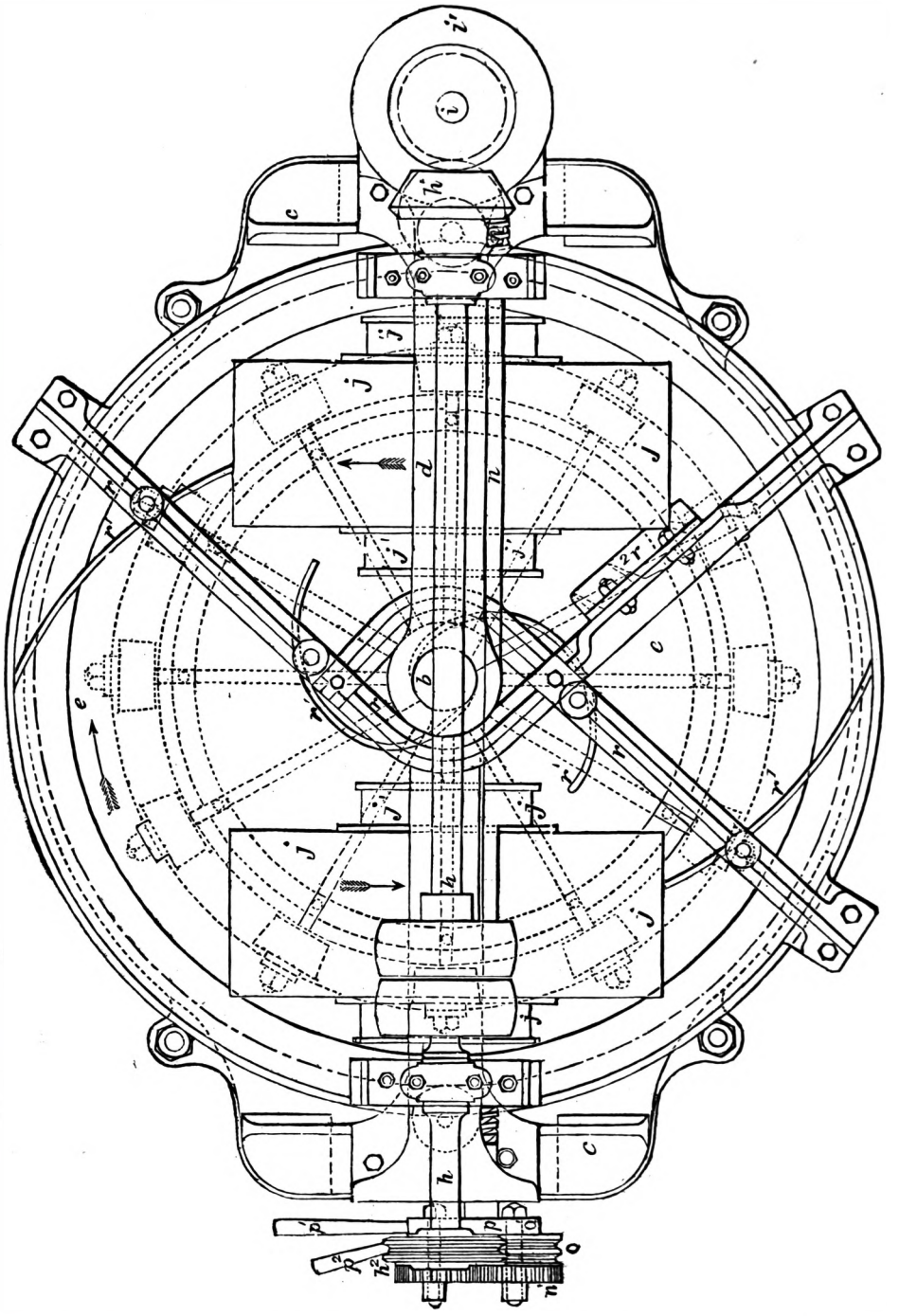

5121.

The most important object to be attained in using any of this class of machines is that of thoroughly amalgamating the materials. The necessity, in ordinary cases at least, does not arise for grinding or pulverizing them, and not only may that action be considered superfluous, but in some cases positively dangerous. The sliding action of the metal surfaces induces frictional heat, which has a tendency to evaporate the water of mixture, resulting in the imperfections due to over-grinding. It is well to avoid the use of such machines as impart this peculiar sliding action, unless on works of sufficient magnitude to ensure their careful and intelligent supervision. The simple hand-machines will be found useful in ordinary cases, and great accuracy of admixture may be realized at a comparatively small cost. The danger of excessive trituration of mortars is

not sufficiently considered, and much mischief has been caused in consequence. Portland cement mortar, when submitted to the grinding action of the mortar mill, was much impaired in quality, and after repeating experiments, at the instance of an ignorant engineer, several attempts to thus prepare it were abandoned.

The most desirable method of mortar preparation should consist of two operations,—a thorough dusting of the aggregates with the matrix, and a careful and perfect moistening of the mass by the spray or dusting of the smallest possible quantity of water. By the first process the particles of lime and sand are placed in accurate mechanical juxtaposition, and by the second is imparted the necessary amount of moisture to sufficient chemical agglutination. Such a careful manipulation would not be more expensive than the system of mortar making which now prevails; but even if it were, the improved quality obtained would more than compensate for any increase of cost.

In building the Dirschau Bridge, West Prussia, where the cement could be made contiguous to the works, the following machinery

5121.

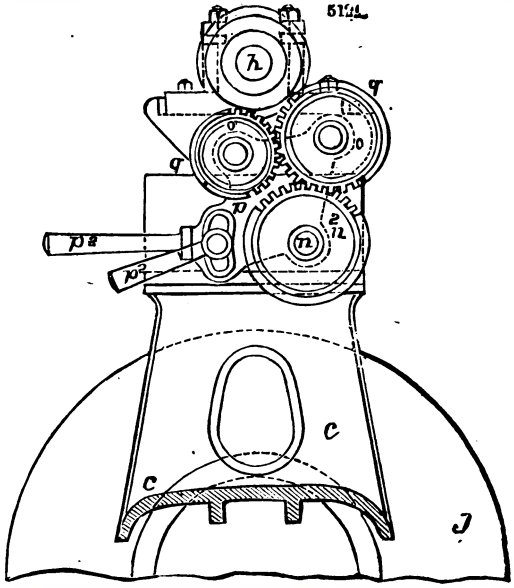

5123.

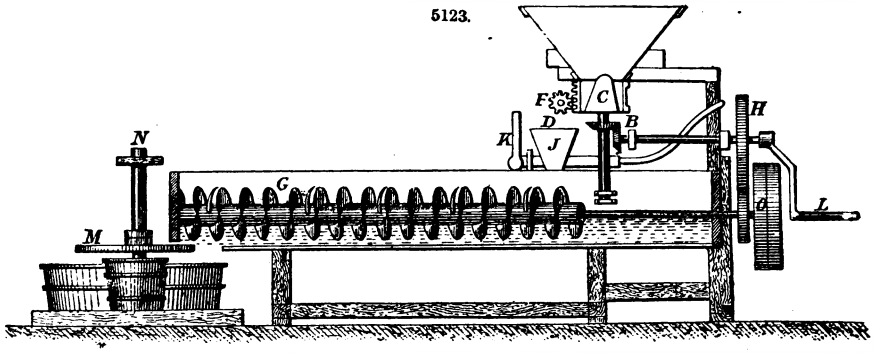

was used, combining cement grinding with the mixture of the mortar. The grinding machinery consisted of eight mortar or vertical mills, the pans of which revolve with a velocity of twenty-two revolutions a minute. The runners to each pan were provided with an adjusting arrangement, whereby the stones could be raised or lowered at pleasure. Each mill was attended by one man, who first put in the burnt cement, and, when it was ground fine enough, the water, and then the sand, was added in the proper proportions. When the cement and sand were thoroughly mixed, the mortar was withdrawn by means of a shovel—held in a contrary direction to the rotation of the pans—and placed in a hand-barrow, in which it is wheeled to the required points of the work for use.

Under ordinary circumstances such an arrangement is not desirable; but in all probability the engineer in charge of the works had special reasons for such an adaptation of the cement-grinding and mortar-mixing machinery. If the cement used was quick-setting in character, much danger was incurred by using it so freshly ground; and if of a slow-setting, hard-burnt nature, the machinery applied was inadequate to extract its greatest value. An application of such a principle is only possible where the necessary scientific control and experience is attainable at a reasonable cost.

5124.

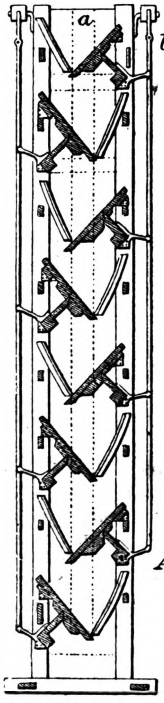

5125.

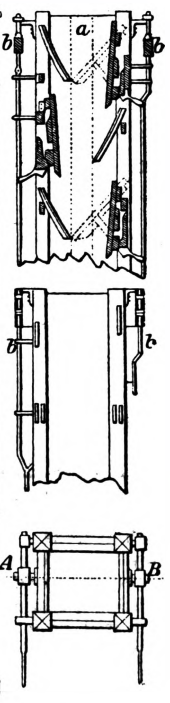

5126.

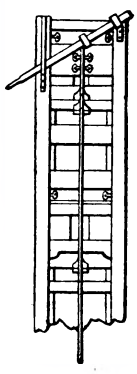

The mortar-mixing machines just mentioned may be used for concrete making where the practice is adopted of mixing the aggregates with a previously-prepared mortar, as in the case of béton, and which forms the distinction between the French material and English concrete. For concrete mixing there have been several machines used in this country, more particularly in the Main Drainage Works of London, and in the works connected with the improvement of the river Tyne. These machines were, however, of an expensive and complicated character, and their use could only be possible on works of considerable magnitude. For ordinary purposes, and in connection with house-building operations, much less complicated and cheaper machines are required, the simplest of which is that used in the construction of the bridge over the river Theiss, Hungary. In this machine the mortar was previously prepared and thrown together with the stones or aggregates into a hopper connected with a cylinder open at both ends. The cylinder was 13 ft. long and 4 ft. in diameter, inclined at an angle of from 6 to 8 degrees. The cylinder was made to revolve at a speed of twenty revolutions a minute, the power to accomplish this being applied by a driving belt placed round the exterior surface of the cylinder, which acted as a driving pulley, the inner surface of the cylinder being smooth, and lined with sheet iron. By this machine the thorough incorporation of 120 cub. yds. of concrete was accomplished during a working day of ten hours. In conjunction with such a machine a mortar-mixing mill might be judiciously combined.

Fig. 5127 is of Messent's Concrete Mixing Machine. The mixing vessel is of cast iron, of such

5127.

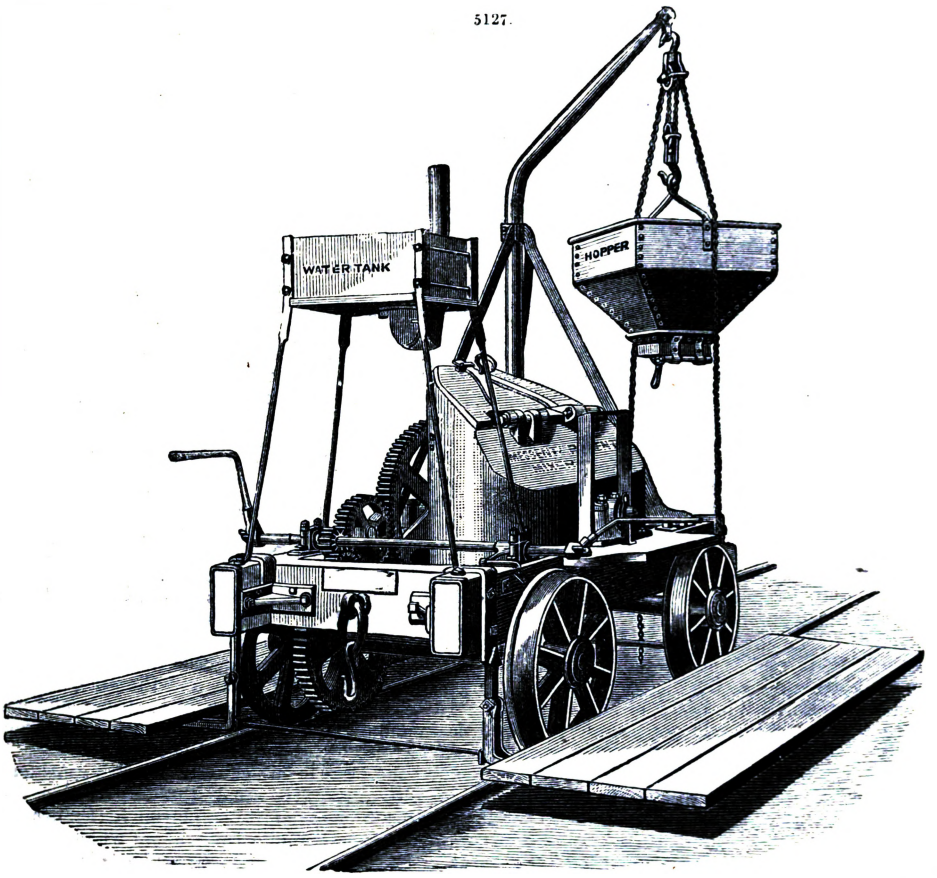

a shape that when half filled with material, and turned round on its axle, the material enclosed is turned over, sideways as well as endways, four times by each single revolution of the mixing vessel. It is fitted with strong top and bottom doors, and is made to revolve on its central axis by means of wheel and pinion gear, and is mounted on a trolly suited to any gauge of rails, or it may have plain wheels for an ordinary road.

A swing jib or davit at one end of the trolly carries a hopper, which contains one charge of the materials, and a tank at the other end contains one charge of water. The mode of working is as follows: the trucks carrying the material usually run on the same line as the mixing machine; the materials for one charge are filled into the hopper, which is turned over the top, and is discharged into the mixing vessel, into which the contents of the water-tank are also emptied. The mixing vessel is then set in motion, and in about seven or eight revolutions all the materials are amalgamated; the door at the bottom is then opened, and the vessel emptied.

Whilst this is being done, the hopper and tank are filled, and their contents again discharged into the mixing vessel.

Practice has shown that the best charge for the hand-worked machines is half a cubic yard, and

this quantity is turned out every six minutes, except during the changing of the empty for the full wagons; the quantity mixed a day is about 45 yds. A much better result is obtained from these machines when worked by steam, but as hand-worked machines they are found economical in cost of labour, whilst the quality of the work is far superior to that obtained by the most careful and laborious hand and shovel mixing.

This machine was specially designed by Messent to obtain a thorough mixture of materials in the large concrete blocks so extensively used in the Tyne piers at Tynemouth, and at the same time to dispense with the necessity of breaking to a uniform size the stones which are ready to hand of very irregular form and size, and it was found to accomplish the object for which it was designed with great economy in time and labour.

LINK-MOTION. FR., *Mécanisme de renversement;* GER., *Schiersteuerung;* SPAN., *Bida articulada.*

See ENGINES, *Varieties of.* VALVES.

LOCK. FR., *Écluse;* GER., *Schleuse;* ITAL., *Conca, Sostegno.*

LOCKS AND LOCK-GATES.

Harbours which do not possess a sufficient depth of water, at low tide, to keep the vessels within them afloat, require artificial appliances to render their advantages practicably available. The means employed for this purpose is the formation of deep-water basins in which the water is retained at a sufficient level when the tide recedes. The retention of the water at such times is effected by means of gates which, though they do not fulfil exactly the same functions as the lock-gates of a canal, are yet called lock-gates on account of their common essential function of maintaining, at pleasure, two immediately adjacent bodies of water at two different levels. Beyond these gates, between the basin and the sea, there is always a walled approach or channel more or less broad subject to the motion of the tide, the chief purpose of which approach is to protect the gates from the waves of the open sea, but which also serves as a place of refuge for small craft. Sometimes half-tide basins are constructed between the approach and the deep-water basin proper. Besides these, there are in some cases dry or graving docks situate beyond the former, and requiring similar gates, though their purpose being to keep the water out instead of retaining it, they close in the contrary direction. In an able memoir read before the Society of Civil Engineers of Paris, by Sylvain Périssé, entitled 'Étude sur les Portes d'Écluse à la Mer,' Périssé states that, by reason of their position, form, and purpose, lock-gates may be classed under five heads, namely, outer or ebb gates, inner gates, sea gates, dry-dock gates, and scouring gates. Our attention, however, will be confined almost exclusively to those of the first kind.

Outer or Deep-water Basin Gates.—These gates are designed, as we have already said, to retain the water in the basin at a certain level when the tide recedes. They are placed between two side walls, which determine the breadth of the passage, and which are recessed to receive the gates when open, in order that the latter may not encumber the passage. Each gate or leaf turns about an axis, called the heel-post, standing vertically in the hollow quoin, so that when the two leaves are brought together the consequent thrust may be received by the heel-posts and transmitted to the quoins. Hence it is important that the latter should be constructed of hard stone, of large dimensions, and prepared with the greatest care.

It is indispensable to the working of the gates that a space should be left between them and the floor of the gate-chamber; and to prevent the escape of the water beneath them, as well as to afford them a lower point of support, the floor or apron is provided with a projection called a mitre-sill, the angle of which corresponds with the point of contact of the two mitre-posts.

One pair of gates is sufficient to form a basin, but in large ports two are nearly always erected, either close together, if space is wanting, or a hundred yards apart, so as to form a lock-chamber. The chief purpose of the double gates is to be prepared against an accident happening to one of them, and to enable repairs to be effected. Other advantages accrue from them, however, such, for example, as the distribution of the pressure over the two pairs, and the use of the lock-chamber as a half-tide basin, or as a wet dock. In places where the current is strong, and where the gates, if single, could not be safely worked, lock-chambers are employed, especially in times of spring tides, and when a certain number of vessels have to be taken in and out.

When the tide is coming in, the surf beats against the back of the gates often with considerable violence. The effect of this is to open the gates in spite of the pressure of the water inside, which stands at a higher level. The means to counteract this force generally employed in France is the use of *portes-valets.* These are a kind of gate usually composed of a heel-post about which they turn, and a stout top cross-piece supported by a strut resting against the lower end of the heel-post. These are erected in the opposite end of the gate-chamber, and their ends brought round till they abut against the leaves of the gates, which are thereby prevented from opening. In England *portes-valets* are unknown, partly because the ports being mostly situate in the mouth of rivers, the gates are less exposed to the action of the waves, and partly because the gates are sufficiently held by the chains connected with the hydraulic machinery employed to open them. Of course, as the *portes-valets* shut back behind the gates when the latter are open, the recess of the gate-chamber must be made deeper to receive them.

Lock-gates are opened and shut by means of chains affixed to the leaves in the middle of their height, or lower down; they are usually four in number, two on the down-stream side and two on the up-stream side of the leaves, and pass over friction-rollers and guide-pulleys to the apparatus by which they are hauled in; this apparatus is often a windlass, and the time required to open the gates by this means is frequently as long as fifteen or twenty minutes. But in this country hydraulic power is employed for all large gates, by which the time is reduced to one or two minutes at most. This is an important advantage in much-frequented ports, especially at times of spring tides.

There are two systems of letting the water in and out of the lock-chamber; one is that of sluices worked from the foot-bridge by means of a rack and pinion, as in common canal locks, in the other,

a culvert is constructed inside the side walls, and provided with sluices worked by apparatus placed upon the quays. The latter system is preferable on account of the double advantage it possesses of being more readily worked, while it does not expose the leaves to the wear and tear consequent upon the opening and shutting of the sluices and the passage of the water. In France, these culverts are always constructed of masonry; but in England cast-iron pipes are often used, probably on account of their being much cheaper.

Inner Gates.—These are gates affording communication between two contiguous basins. They are not equal in importance to the outer gates, but they require the same careful construction, especially when the outer gates are single, as they have to replace them in case of accidents. They differ from the preceding only in their smaller dimensions, more simple working, and in having the sluices in the leaves.

Sea Gates.—The use of sea gates is to prevent the entrance of waves from the open sea; consequently they act in the contrary direction to the others. At the time of the construction of the lock, a chamber is made beyond the outer gates, having its mitre-point directed towards the approach. This chamber does not always receive a pair of sea gates, but they may be erected in case it should be required to use the chamber as a dock to examine and repair vessels in. But it is advisable to have them in harbours exposed to violent fluctuations of tide, such as are common in tropical seas. In those cases they are called hurricane gates, and are constructed of open framework, that they may fulfil their functions the better. Sometimes, especially in England, sea gates are in the form of vertical caissons, convex on the side of the sea. These caissons are floated into their position. As an example we may cite that of the Victoria Docks, constructed in 1858, and having an opening of 79 ft. from side wall to side wall, and a height of 31 ft. It weighs about 90 tons, and costs only about 2000*l.*

Dry-dock Gates.—These are a kind of floating coffer-dam, usually of iron, and of very large dimensions, as they are required to close an entrance having a breadth from side wall to side wall sometimes as great as 100 ft. But as it would be beyond the scope of the present article to enter into details concerning these gates, a description of them must be sought under other heads.

Scouring Gates.—The use of scouring basins is to wash away, by means of a strong current at low water, the deposits which collect at the bottom of the deep-water basins. The gate closing the entrance to a scouring basin usually consists of a single leaf turning about a vertical axis placed a short distance from its middle. In the larger portion there is a sluice, the dimensions of which are calculated to render the smaller predominant when the sluice is raised. By these means the water may be retained or released at pleasure. It must be remarked that by reason of the difference in the two portions of the leaf, the flood opens the gate, and the ebb closes it.

Breadth between the Side Walls.—The distance between the side walls has naturally increased with the size of vessels, and up to 1856 engineers, in consequence of the difficulty of constructing gates of large dimensions, and more especially of their great cost, had adopted the breadths absolutely necessary to the largest ship then existing, or in course of construction. Thus, from the breadth originally fixed at 40 or 43 ft. in the last century, we have passed successively to 50, 60, and 70 ft. But about the year 1856 it was deemed expedient to take into account the probable future increase in the size of sea-going ships, and an inquiry was set on foot for the purpose of determining the ratio existing between the breadth, including the paddle-boxes, of paddle-ships, and the draught of water. The results showed this ratio to be nearly constant, and equal to about 3·75. The maximum draught of water having been fixed at 24·6 ft., in consideration of existing depths both in Europe and in America, the maximum breadth of paddle-steamers was estimated at $24{\cdot}6 \times 3{\cdot}75 = 92{\cdot}25$, a breadth which has not yet been reached.

It was in consequence of these investigations that the great lock-gates of Liverpool and Havre were decided upon, having an opening of 100 ft. Since that time (1860) the breadth of the gates constructed has varied from 50 to 100 ft. in England, and from 50 to 80 in France. Now that paddle-steamers have been almost abandoned, in consequence of the nearly general adoption of the screw-propeller, this breadth is being reduced, as the hull of the largest vessels, with few exceptions, does not exceed 43 ft. in breadth. The distance from side wall to side wall which seems to be adopted now varies between 54 ft. and 72 ft.

Nature of the Materials employed.—As we have already stated in our article on Docks, it was found necessary, as lock-gates increased in size, to abandon wood in favour of iron as the material of construction. Native timber of sufficient scantling could not be obtained, and recourse was of necessity had to timber of foreign growth, such as Quebec oak, the red and yellow pines of Canada and the United States of America, Memel pine, and the green-heart of British Guinea. But, with the exception of the latter, which is expensive, and perhaps East Indian teak, which is still more expensive, all known timber when immersed in salt water is attacked by worms which destroy it in a very short time. The most common, as well as the most destructive of these, is the *Teredo navalis*, whose ravages are confined to the heart of the wood. Two means have been resorted to for the purpose of protecting the wood against these worms, one of which was to steep it in a solution of creosote. This at first gave excellent results, but is now considered insufficient. The other means consists in covering the surface of the wood with large-headed nails. This means, which is very effective, is generally adopted in France. As the worms do not ascend higher than the low-water mark of the neap tides, it is requisite to extend the nails only a short distance above this point. Under any circumstances, however, wooden gates are not very durable, and the cost of repairs is considerable. These considerations led to the adoption of iron for the principal parts of lock-gates. But these mixed constructions, in which expansion, influence of moisture, elasticity and resistance for unity of surface were so widely different, failed to realize the expectations formed of them, and they were abandoned in favour of iron alone. The first important constructions composed wholly of this material were those of the Victoria Docks, near London, erected in 1857, and in the year following others were constructed at the Jarrow Docks, upon the Tyne, on the same system. About the same time, the use of iron was rejected in France for the great gates at Havre,

and it was not till eight years later, in 1866, that the General Council of the *Ponts et Chaussées* authorized the construction, at Boulogne, of the first large gates of plate iron. In the following descriptions of the principal gates at present existing, we shall have occasion to point out the main advantages resulting from the employment of this material.

Before entering upon these descriptions, however, we must call attention to the old mode of constructing wooden gates. Originally they were braced diagonally with either single or double struts, and the cleading was generally parallel with the bracing. The latter have the disadvantage of weakening the cross-pieces, by the notches and mortises which they necessitate. Later, as the knowledge of metallurgy progressed, double iron ties, that is, applied to both the up-stream and down-stream sides of the leaves, were adopted. This enabled the cleading to be placed vertically, and so stay the cross-pieces.

The numbers to the left of our figures illustrating the examples of lock-gates refer to the various heights of the water, and all marked dimensions are on the metric system.

The Wooden Gates at Dunkirk.—These gates, Figs. 5127*a*, 5128, which were erected in January, 1856, offer several remarkable points. Each leaf has a double diagonal oak bracing, or rather strut, from the foot of the heel-post to the upper cross-piece at about two-fifths of its length from the heel-post. Additional security is given to this portion of the leaf by a tie-rod. The only bracing beyond this is a tie-rod from the upper cross-piece at the point where it receives the strut to the lower end of the mitre-post. These gates therefore furnish a good example of the simultaneous employment of the strut and tie-rod. It will be observed that the cross-pieces are weakened by the passing of the strut only in those points where the moments of flexion are relatively weak.

The cross-pieces, exclusive of the top and bottom pieces, which form with the posts a rectangular frame of native oak, are nine in number, and are of red Northern pine; these, with the upper and lower pieces, give 10 spaces, varying in height between 10 in. and 2 ft. 4 in. Each cross-piece is composed of two pieces; the one of the down-stream side is straight, and reaches from heel-post to mitre-post, a distance of 35 ft.; the other presents on the up-stream side the curve of the leaf, and is only about 29½ ft. in length for the upper cross-pieces. They are mortised into the posts, and tightly wedged and pinned. Five series of vertical oak supports or stiffeners, 12 in. × 10 in. on the up-stream side, and 12 in. × 4 in. on the down-stream side, bolted together through the leaf, and strengthened by iron bands, upon which the heads and the nuts of the bolts rest, bind, with the cleading, the cross-pieces firmly together, and at the same time serve as guides to the three sluices. The position of the latter has been determined, so that the water-ways are outside the two tie-rods. Each sluice has four water-ways 9¾ in. high, and 3 ft. 3¼ in. broad in the first, and 2 ft. 11½ in. in the other two.

Additional strength is imparted to the leaves by two stout iron cramps upon the upper cross-pieces; a strong iron band enclosing the posts, and tightly screwed up, and, between two tie-rods 2 in. in diameter, for the purpose of holding the heel-post and mitre-post together, and maintaining rigidity in the horizontal direction. The lower end of the heel-post has a bronze socket or step, resting upon a pivot of the same metal, fixed in the masonry; at the top, the post is held vertical in the quoin by means of an iron collar, which, by means of two tie-rods, is anchored back into the masonry of the quay.

The following are the principal dimensions;—Distance from side wall to side wall, 68 ft. 10 in.; height of the upper cross-piece above the mitre-point, 23 ft. 1 in., thus giving a surface of 1573 sq. ft. Length upon the axis of a leaf, 38 ft. 7 in.; total height of the leaf, 23 ft. 9 in.; thickness of leaf, in the middle, including the cleading, 2 ft. 11 in.; thickness at the ends, 1 ft. 7 in.; thickness of the pine up-stream cleading, 3½ in.; thickness of the oak down-stream cleading, 2¼ in.; breadth of the heel-post (of native oak), 1 ft. 11½ in.; breadth of the mitre-post upon the axis of the leaf, on the up-stream side, 1 ft. 10 in.; on the down-stream side, 1 ft. 3¾ in.; mean, 1 ft. 6¾ in.; depth of the lower cross-piece, 1 ft. 4½ in.; depth of the upper cross-piece, 1 ft. 5½ in.; depth of the four bottom intermediate cross-pieces, 1 ft. 1½ in.; depth of the five top intermediate cross-pieces, 11¾ in.; diameter of the heel-post at the collar, 1 ft. 5¾ in.; greatest section of the half-struts, 1 ft. 3¾ in. × 9¾ in.; section of the iron ties, 5 in. × 11¾ in.; thickness of the *portes-valets*, 1 ft. 5½ in.; depth of the gate-chambers, 5 ft. 6¾ in. The total cost of these gates was about 3000*l*. The highest level of the equinoctial spring tides, the mean level of the ordinary spring tides, the highest level of the neap tides, and the mean level of the neap tides, are marked in the figures 1, 2, 3, 4, respectively.

The Wooden Gates of the Deep-water Basin at St. Nazaire, Figs. 5129, 5130.—These gates, the side walls of which are 82 ft. apart, are worthy the attention of engineers on account of the peculiarity they possess of having no posts, strictly speaking. All the cross-pieces extend on one side to the hollow quoin, and on the other to the opposite leaf, and they terminate at each end according to the same profile. The plane surface in contact at the end is about 12 in. broad rounded off from the down-stream face with a radius of 3 in., and from the up-stream face with a radius of 9¾ in., forming on this side a quarter of a cylinder, in the centre of which are the gudgeon and socket upon which the gate turns. In consequence of this arrangement the hollow quoins are of a special form, which seems more rational than the common round form, in order to receive the strains of compression due to the reaction of the two leaves. The lower portion of the leaf is solid up to a height of 15 ft. 9 in,, that is, formed by placing twelve cross-pieces, 15¾ in. in depth one upon another, and held at the bottom and at the top by two other cross-pieces of iron (in plate of ⅜-in. and angle-iron 2⅝ × 2⅝), which with vertical ⅜-in. plates completely covering the two ends of the leaves, serve as a framing. Six series of intermediate pieces placed vertically on each side of the leaf and bolted together, assist in holding the twelve cross-pieces firmly together. Above the solid portion are two hollow portions, 3 ft. 1 in. in height, separated by a single cross-piece, 1 ft. 3¾ in. in depth, like the others, and above these another hollow space, 6 ft. 6¾ in. in height, surmounted by the top cross-piece, 1 ft. 3¾ in. in depth. The upper part of the leaf is, like the lower, held together by a cross-piece of plate and angle iron, joined to the bands on the two ends, which bands or end plates form a series of hoops placed one above another throughout

the height of the leaf. The top and bottom pivots are of cast iron, and are as firmly fixed to the extreme cross-pieces as the system will allow. The upper pivot, which is subjected to a shearing strain, has a bolt 4¼ in. in diameter passing through its axis longitudinally, which bolt is sufficiently long to pass completely through the wooden cross-piece beneath. Each cross-piece is a

5127a.

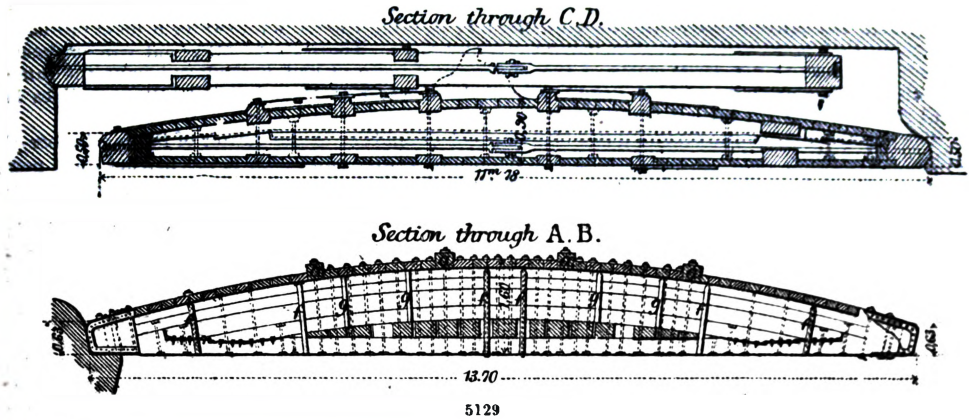

5129

kind of trussed girder, composed of a straight tie-beam on the down-stream side, of 15¾-in. scantling, and on the up-stream side of four arched pieces, 7¾ in. thick, and placed one over the other. Two of these pieces reach the whole length of the leaf, whilst the two inner ones are notched into the tie-beam. Fig. 5129 shows between these pieces and the tie-beam, towards the middle for a length of about 20 ft., a series of spaces filled with wooden wedges driven in vertically with a monkey. These hold the cross-pieces firmly together. The cleading on the up-stream side is of wood, 3 in. thick, and extends throughout the whole height; but on the down-stream side, it exists only above the solid portion, and is of plate iron, $\frac{3}{16}$ in. thick, being bounded by the two iron cross-pieces, and having consequently a height of 17 ft. 2 in.

5128. 5130.

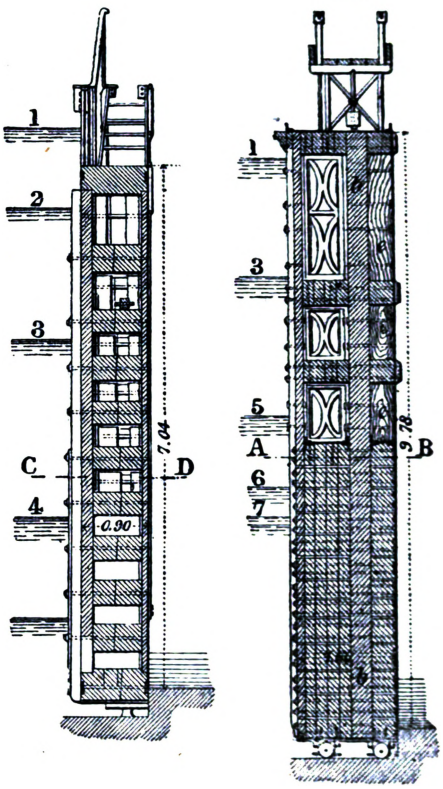

The lower face of each leaf rests upon two pairs of rollers, situate, one towards the middle, the other near the end of the leaf. The diameter of the rollers is only 11 in. with a breadth of 7 in. In consequence of the light load they have to bear, the floor is not provided with an iron roller path. The conditions of rolling are here evidently very bad, by reason of the insufficient dimensions of the rollers, which had to be placed in the space, 11⅛ in. in height, existing between the leaf and the floor. But if it is necessary in such cases to have rollers at all, it would surely be better to adopt an arrangement which would enable larger rollers to be used.

The following are the principal dimensions of these gates;—Distance from side wall to side wall, 82 ft.; height of the top cross-piece above the mitre-point, 32 ft.; hence a surface of 2624 sq. ft. Length of a leaf upon the axis, 45 ft. 4 in.; height of the leaf, including the top angle-iron, about 32 ft. 9 in.; thickness of the leaf in the middle, 5 ft. 2¾ in.; thickness at the ends, 2 ft. 0½ in.; diameter of the upper pivot, 11¾ in.; diameter of the lower pivot, 9¾ in.

The first pair of gates were constructed, in 1856, of Prussian red pine; but for the second pair, erected in 1859, pitch pine was chosen, which, among other advantages, possesses that of greater density. This condition of density will be recognized as of considerable importance, if we consider that, on the one hand, the weight of a leaf in air is 123 French *tonnes*, with pitch pine weighing 730 kilogrammes the cubic mètre, and that, on the other hand, the volume displaced by the solid portion of the leaf is 123 cubic mètres. The gates will therefore be very light, with the heights of water under which they are usually worked, and, supposing red pine used, it would be necessary to weight the leaves in order to ensure proper working. The first pair of gates were built vertically in their present position. The second had to be constructed in the yard, and floated to their positions. These were also built vertically. The upright position is to be chosen in all cases,

for when the horizontal is adopted, it is difficult to get at the lower side. The cost of these gates was about 7700*l.*

High water of the equinoctial spring tides, high water of the neap tides, low water of the neap tides, low water of the spring tides, and low water of the equinoctial spring tides, are marked on the figure 1, 2, 3, 4, and 5, respectively.

The Citadel Gates at Havre.—These gates, Figs. 5131, 5132, which were finished in 1862, are remarkable for their exceptionally large dimensions. The distance from side wall to side wall is 100 ft., and the mitre-point of the floor was laid 11 ft. 6 in. below the low-water level of ordinary neap tides, that is, at about 9 ft. 6 in. below the lowest tides. There are no other gates in existence so deep and broad. The large gates of the Mersey at Liverpool and Birkenhead have the same breadth, but they are not nearly so deep. The depth of water at Havre at the full neap tides is about 28 ft., so that the largest vessels may pass.

The construction of the citadel gates offered great difficulties in the matter of finding timber of sufficient scantling, and it probably would be found practically impossible to reconstruct them now on the same system. It would be necessary to introduce modifications so as to allow the employment of smaller timber, or to adopt iron.

The gates are double, and are situate 93 ft. 9 in. apart. The versed sine of the mitre-sill is between a fifth and sixth of the span, and was calculated so that the two leaves, when shut, might present on the up-stream side a single circular arc, having a radius of 107 ft. 4 in. The recesses for the gates are 59 ft. 5 in. long and 11 ft. 6 in. deep.

The top of the gates does not reach quite up to high-water level of the neap tides; but this height may be increased, if required, by the addition of removable portions. The desire to obtain gates light upon the pivot, without incurring the tendency to rise when deeply immersed in the high water of the spring tides, led the engineers to terminate the height of the gates at this level. In consequence of this arrangement the gates were suspended by ties, and they are capable of being moved without rollers, with which, however, they are provided in case of an accident lowering the water-level of the basin. Each leaf may thus rest upon *two rollers*, one situate near the mitre-post and the other at about 29 ft. 6 in. from the pivot. They are about 15½ in. in diameter and 5¾ in. broad, and they may be raised or lowered by means of jack-screws upon the foot-bridge. They roll directly upon the floor of the chamber.

Each leaf is composed essentially of two posts of French oak, connected by twenty-three cross-pieces 1 ft. in depth of Prussian pine. These cross-pieces are placed in contact one upon the other so as to form in reality only three immense cross-pieces. The bottom one consists of eighteen pieces, giving consequently 18 ft. of solid wood. The middle one consists of three pieces = 3 ft., and the top one, being composed of two pieces, has a depth of 2 ft. Each *partial cross-piece* is a solid trussed girder 6 ft. 6 in. broad in the middle, and 52 ft. 6 in. long from post to post; it is straight on the down-stream side, but presents on the side of the pressure a pretty sharp curve. The nature and construction of these cross-pieces are the same as in the St. Nazaire gates. They are firmly bound and bolted to the posts, and the various pieces of which they are composed are held together by numerous vertical and horizontal bolts, and five series of vertical stirrups. The ties are double upon each face; the longest, which is about 65 ft. long, is attached to the heel-post above the collar. The latter is in two pieces of wrought iron, and the wooden pivot which it encloses is 2 ft. 6 in. in diameter. The lower pivot and socket are of bronze, the former being fixed in the post. This arrangement renders the socket liable to become obstructed, but, on the other hand, the post is less weakened. No play was allowed between pivot and socket—a condition that is certainly open to objection. Each leaf is provided with two sluices arranged symmetrically in the first space near the two posts, in order that their projection upon the curved face may not prevent the leaf from being shut back close into the recess. The breadth of the opening of the sluice is 6 ft. 6¾ in., and the height 2 ft. 4½ in.

The following are the principal dimensions;—Distance from side wall to side wall, 100 ft.; height of the top cross-piece above the mitre-point, 29 ft. 8 in.; hence a surface of 2980 sq. ft. Length of a leaf from the outside of the heel-post to the middle of the part in contact, 57 ft. 6 in.; height of the leaf, 32 ft. 4 in.; total thickness of the leaf in the middle, 6 ft. 10 in.; thickness at the heel-post, 2 ft. 11½ in.; thickness at the mitre-post, 2 ft. 1 in.; breadth of the surface of contact of the two leaves, 1 ft. 3 in.; height of the mitre-sill, 3 ft. 3¼ in.; space beneath the gate, 2 ft. 4½ in.; height of the foot-bridge above the leaf, 6 ft. 6 in.; height of the coping of side walls above the gate, 13 ft. 2 in.; dimensions of the heel-post, scantling, 3 ft. 3¼ in. × 2 ft. 11½ in., length, 39 ft. 4 in.; dimensions of the mitre-post, scantling, 2 ft. 7 in. × by 2 ft., length, 38 ft. 8 in.; thickness of the up-stream cleading, 3⅛ in. The high-water level of the ordinary spring tides, high water of ordinary neap tides, mean height of water, low water of ordinary neap tides, and low water of ordinary spring tides, are marked on the figure 1, 2, 3, 4, 5, respectively.

The total cost of these gates was a little over 33,000*l.*

The Gates of the Port of Dieppe.—The gates of the Duquesne basin at Dieppe, Figs. 5133, 5134, recently constructed, are remarkable for their simplicity and for the arrangement of the cross-pieces at equal distances apart. They constitute a very good type, and Levoinne, the engineer, applied, in the calculation of their wooden framework, formulæ which he had previously found for the flexion of cross-pieces bound together by a system of vertical trussing—a fact that gives them an additional point of interest.

The distance from side wall to side wall is 54 ft. 1 in., and the height of the top main cross-piece above the mitre-sill is 26 ft. 5 in. The sill is exposed at low water of ordinary spring tides, and the high water of the equinoctial spring tides rises above the gate by about 12 in. The latter is formed of an oak framing, the posts of which are connected by eight similar fir cross-pieces, forming with the upper and lower cross-pieces nine equal spaces. The vertical and equidistant pieces constitute a trussing; each of these is formed of two pieces, one 15¾ in. × 11¾ in. on the inside, and 15¾ in. × 5¾ in. on the outside, and is notched 2 in. deep over each cross-piece. The

5131.

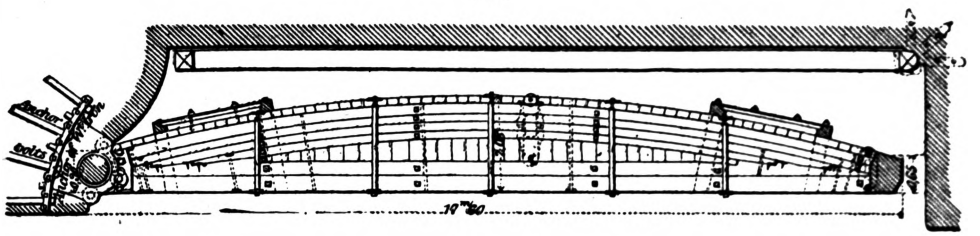

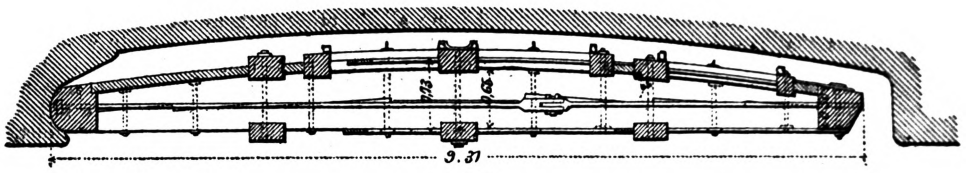

5133.

5135.

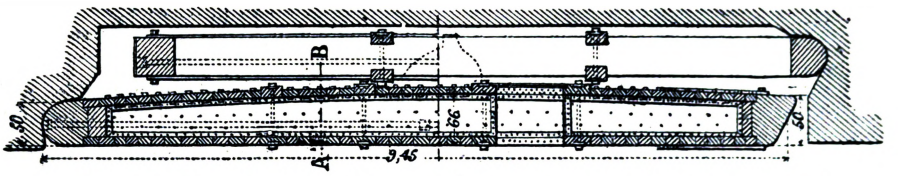

5134.

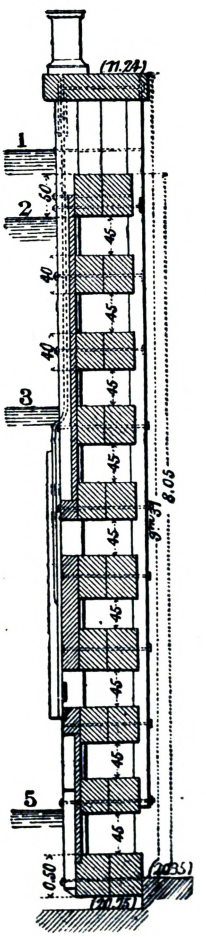

5136.

Section through A.B.

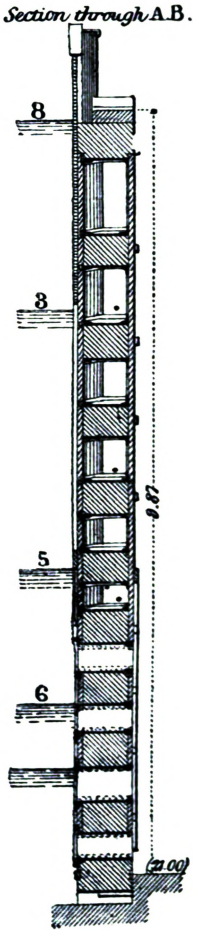

5132.

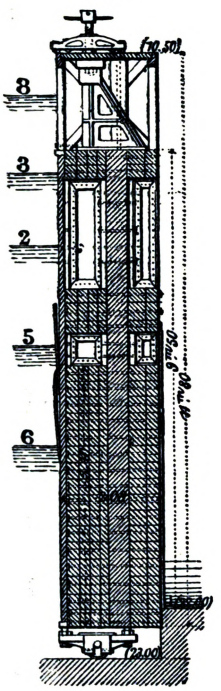

latter is formed of two pieces, the one on the down-stream side straight, the other curved and abutting upon it near the ends, the two being bound together by bolts, so as to constitute a single piece, having a thickness in the middle of 2 ft. 1 in.

The leaf is suspended upon its double-tie, the strain upon which is transmitted directly to the collar. The cleading on the up-stream side is of oak $3\frac{1}{2}$ in. thick. There are two sluices in each leaf. The total length of the leaf is 33 ft. 8 in.; the height of the leaf proper, 27 ft.; and the total height of the gate, including the cross-piece forming the foot-bridge, is 33·8 in. The gates are not nailed to prevent the ravages of worms, probably because the sill is very high, and only the bottom cross-piece is situated below the low-water level of neap tides. The figures 1, 2, 3, 4, on the vertical section, Fig. 5134, represent respectively the high-water level of the equinoctial spring tides, high water of ordinary spring tides, high water of ordinary neap tides, and low water of ordinary neap tides. The cost in this instance was about 1700*l.*

Mixed Gates at Fécamp, Figs. 5135, 5136.—These gates, which were constructed in 1864–5, we call mixed, because the cross-pieces are of wood and iron; all the other parts are of wood, and their arrangement is that generally adopted for wooden gates. We shall therefore merely give the principal dimensions. The timber used was Quebec oak for the posts and the top and bottom cross-pieces, and yellow pine for the intermediate pieces. The following are the principal dimensions;—Distance from side wall to side wall, 54 ft.; height of the top cross-piece above the mitre-point, 32 ft. 6 in.; length of a leaf from outside of heel-post to the middle of the part in contact, 31 ft. 2 in.; thickness of the leaf in the middle, 2 ft. $1\frac{3}{4}$ in.; thickness at the ends, 1 ft. $7\frac{1}{2}$ in.; height of mitre-sill, 1 ft. $3\frac{3}{4}$ in.; versed sine of sill, 10 ft. 8 in.; length of the iron strengthening cross-pieces, 26 ft. 6 in.; thickness of the up-stream cleading, in yellow pine, 4 in.; thickness of the down-stream cleading, in oak, $2\frac{1}{2}$ in.; scantling of the heel-post, 24 in. × 19 in.; scantling of the mitre-post, 24 in. × 19 in.; scantling of the cross-pieces, about 9 in. × 17 in.; section of iron stay (two to each cross-piece), a web of $\frac{3}{8}$ in., and two angle-irons of $\frac{2\frac{1}{2}\text{ in.} \times 2\frac{1}{2}\text{ in.}}{\frac{11}{32}}$; section of iron ties, $5\frac{1}{4}$ in. × $1\frac{1}{8}$ in.

High water of ordinary spring tides, high water of neap tides, low water of neap tides, and low water of ordinary spring tides, are marked on the vertical section of Fig. 5156, 1, 2, 3, 4, respectively. The cost of these gates was about 4500*l.*

The Boulogne Iron Gates, constructed in 1866–7.—These are the first iron gates ever erected in a French port. They constitute the outer gates of the new deep-water basin; the inner gates being

5137.

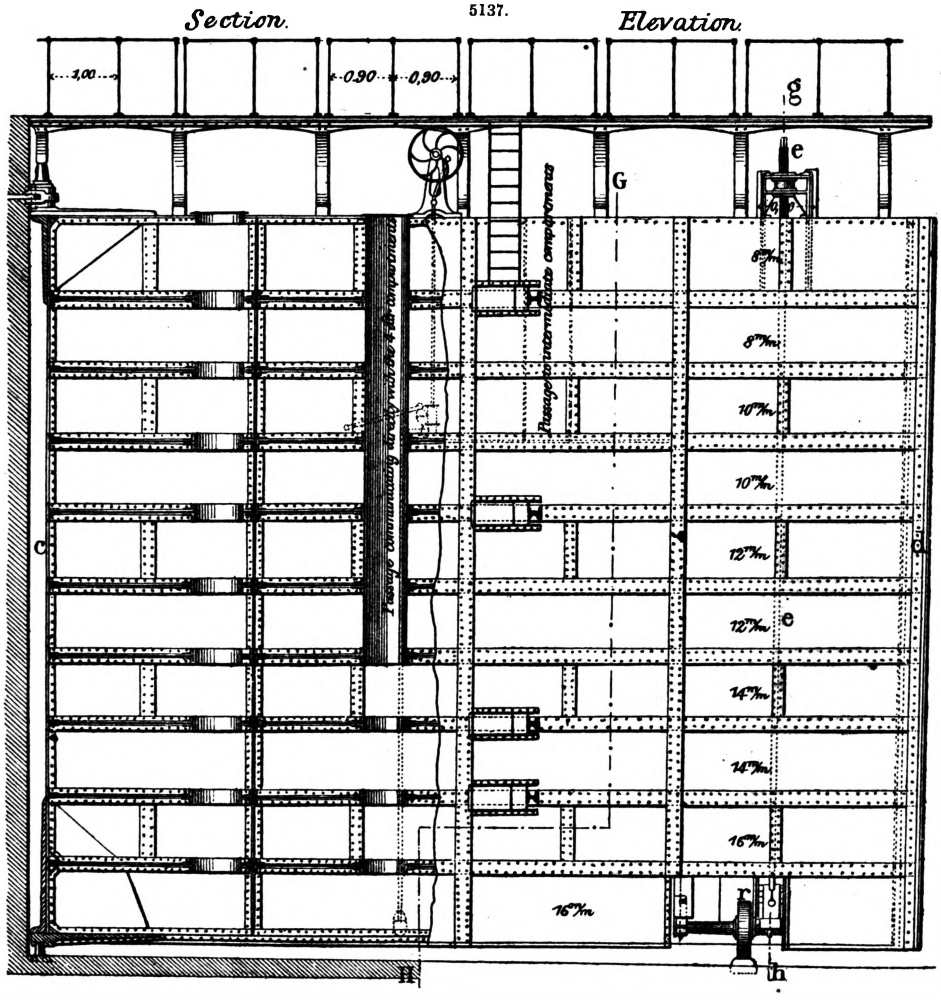

constructed of wood and iron. The exceptional conditions in which these gates had to be placed, led to the adoption of iron as the material of construction. But the timidity of the engineers in this matter was such, that they determined to construct, side by side with them, wooden gates of the same dimensions. Outer gates must be capable of being opened and shut at all states of the tide, and they are exposed to the action of the surf, which, with certain winds, runs very high at Boulogne. Consequently, with this double condition, there was little ground for hesitation. Indeed, whatever the depth of water upon the sill, even if there is only 9 or 10 ft., gates must turn upon rollers, and therefore must be made as light as possible on the supposition of non-immersion. Iron possesses over wood the double advantage of giving lighter and more rigid gates: that is, better fitted to bear the exceptional strains resulting from partial immersion. And with regard to the action of the waves, iron gates are in better condition of resistance, since, being composed of hollow compartments, their weight may be increased at pleasure by letting water into them, and in this state they are less influenced by the action of the sea.

5138. 5139.

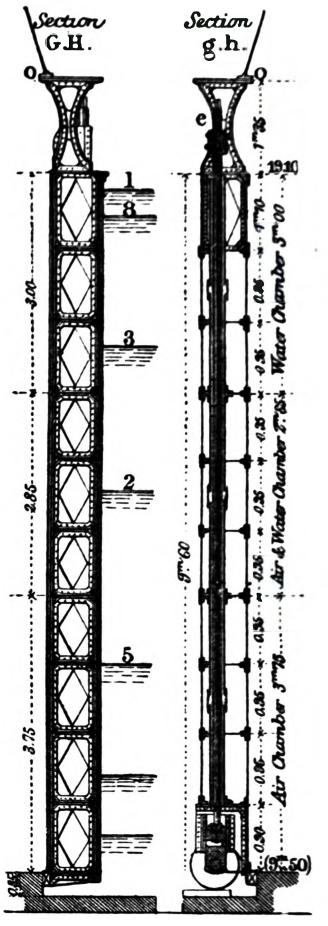

As these gates at Boulogne, Figs. 5137 to 5140, were designed by the French engineers, after a careful examination and study of the principal iron constructions of a like nature in England, they may be taken as representing the highest stage yet attained in the art of lock-gate building. We shall therefore give, in this case, a more detailed description.

The distance from side wall to side wall, Fig. 5141, is 68 ft. 10 in., and the mitre-point is situate 1 ft. 7½ in. below the lowest equinoctial tides. The height of the gates above the sill is 31 ft. 6 in., and the equinoctial tides give a difference of level of 29 ft. 4 in.; consequently, the top of the gate exceeds the highest tide by about 6¼ in.

Each leaf, Figs. 5137 to 5140, may be considered as a kind of caisson, closed upon its six faces, rectangular in height, with a plane surface on the down-stream side, and a curved surface on the other, having a radius of 146·22 ft. The ends are covered with wood to serve as heel and mitre posts, not from the point of view of resistance, but only for the purpose of establishing contact between compressible pieces, and giving line of junction between the two leaves, and between the leaves and the masonry. For the same reason, the lower portions of the leaves in contact with the sill are faced with wood. The leaf is divided horizontally into ten nearly equal compartments, by eleven cross-pieces or diaphragms fixed at the ends into the shutting posts, and supported between by three vertical diaphragms of large dimensions. This arrangement is the first application lock-gates of the results of experiments made by Chevallier, to which

5140.

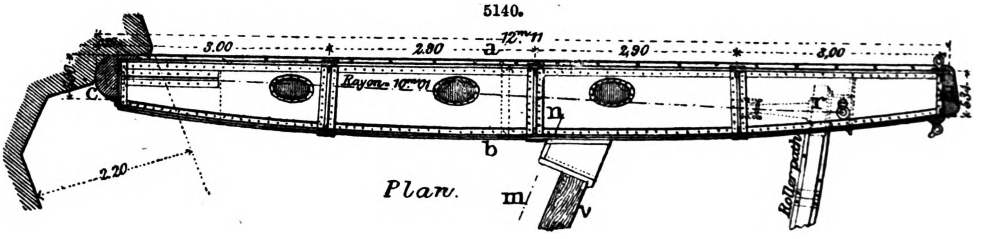

we shall have occasion to refer later. The leaf is divided, by water-tight diaphragms, into three horizontal chambers;—

The lower air-chamber, comprising four compartments, and having a height of 12·40 ft. from axis to axis of the plates.

The intermediate air or water-chamber, corresponding to three compartments, has therefore a height of 9·34 ft.

The upper water-chamber, comprising the other three compartments, having together a height of 9·84 ft.

5141.

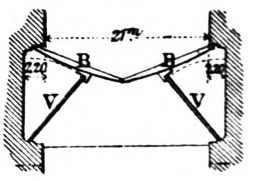

Consequently the leaf has a total height of 31·58 ft., measured from the axis to the axis of the extreme cross-pieces. The compartments are all 3·11 ft. in height, with the exception of the bottom and top compartments, the former of which is 2·95 ft., and the latter 3 31 ft. The length of the leaf, measured from the outside of the wood-lining of the hollow quoin to the middle of the face of contact of the mitre-posts, is 40·10 ft. The height of the sill is 13·7 in., and the rise is one-fifth of the span.

Inner Cross-pieces, Figs. 5138, 5142. — These are all similar, and are in the form of double-T girders, composed of a web ·39 in. thick, four angle-irons $\frac{3\cdot15 \text{ in.} \times 3\cdot15 \text{ in.}}{\cdot5 \text{ in.}}$ and two

flanges $\frac{6\cdot5 \text{ in.}}{\cdot39 \text{ in.}}$. The height of the web in the middle is 2·88 ft., and towards the ends, 1·60 ft. The versed sine of the curve of the up-stream face is therefore 1·27 ft. These webs are in three pieces, joined by double fish-plates. Three man-holes are provided in the web of all the cross-pieces.

5142.

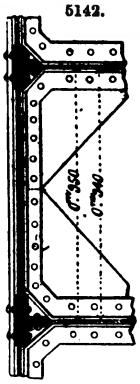

Bottom Cross-piece.—This also is in the form of a double-T girder, with a web ·62 in. thick, and four angle-irons $\frac{3\cdot93 \text{ in.} \times 3\cdot93 \text{ in.}}{\cdot54 \text{ in.}}$, the height in the middle being 2·95 ft., and at the ends 1·67 ft. The web and the two angle-irons on the up-stream sides is interrupted by the roller; but the requisite rigidity has been given to the chamber, where this occurs, by means of gusset-pieces.

Top Cross-piece.—The dimensions of this piece are the same as those of the bottom piece. The web is sufficiently broad to cover the skins.

Shutting Posts.—These consist of a plate 19·68 in. × ·62 in., bearing, internally, two angle-irons $\frac{3\cdot93 \text{ in.} \times 3\cdot93 \text{ in.}}{\cdot50 \text{ in.}}$, one of which, that on the up-stream side, is open at a suitable angle to receive the plates forming the skin. The heel-post has besides, externally, an angle-iron $\frac{4\cdot71 \text{ in} \times 3\cdot15 \text{ in.}}{\cdot50 \text{ in.}}$, the short arm of which abuts upon the wood lining of the hollow quoin. To give great stiffness to these parts, which are subjected to the strains of compression due to the reaction of the two leaves, they are provided internally with a series of vertical T-irons, reaching from one cross-piece to the other.

Vertical Trussing.—In consequence of their importance, these pieces had to be constructed in the best conditions their system allowed. They could not be continuous throughout, on account of the cross-pieces forming the horizontal diaphragms, and it was necessary to have man-holes through them. To satisfy these conditions, these vertical pieces are composed, inside, of a series of quadruple angle-irons $\frac{3\cdot93 \text{ in.} \times 3\cdot93 \text{ in.}}{\cdot54 \text{ in.}}$; these angle-irons, joined together by four triangular gusset-pieces of ·39 in., are bolted to the webs of the cross-pieces and to the skins, upon which, however, a large outside plat-band or strip has been added $\frac{8\cdot45 \text{ in.}}{5\cdot89 \text{ in.}}$, extending throughout the height of the leaf, for the purpose of increasing the resistance, and with this, a series of double plates, 8·45 in. broad, forming a lining between the strips and the horizontal joint-plates. The mean horizontal distance from the outside to the outside of the strips, that is, the depth of the section of the vertical pieces, is 3·19 ft. for the central piece, and 2·87 ft. for the other two.

Skins, Figs. 5137, 5142.—These are the same on both sides. Their thickness varies by ·07 in., every second compartment being successively, beginning at the bottom, ·62 in., ·55 in., ·48 in., ·41 in., and ·34 in. The contract required ·69 in. for the bottom plates, but it was found in practice that plates over ·62 in. thick could not be properly tightened up by the rivets. The consequence of the substitution of ·62-in. plates was to diminish by ·19 in. the height of the bottom compartment, which is only 2·952 ft., and to add between the vertical diaphragms a framing of angle-iron, the effect of which is to make the skins rest upon nearly square panels, a condition evidently favourable to their resistance. The joints in the skins are covered with strips of plate 6·58 in. × ·39 in., which, upon the cross-pieces, double the section of the flanges. At the mitre-post end the plates are carried out 2·36 in. on the down stream, and 7 in. on the up-stream side, so as to overlap the wood.

Rivetings.—The rivets are $\frac{3}{4}$ in., and are from $2\frac{3}{4}$ in. to $2\frac{7}{8}$ in. apart from centre to centre. The rivets in the vertical diaphragms are a little thicker, $\frac{7}{8}$ in.

Man-hole Passages.—Each leaf has two passages affording access, one to the air-chamber, the other to the intermediate air or water chamber. Thus an inspection is at all times practicable. Their section has been reduced to the minimum in order to reserve as much space as possible for the communication ways. They are oblong in section, 1·96 ft. by 1·14 ft., two half-circles 1·14 ft. in diameter, joined by a rectangular portion of ·82 ft.

Step-piece and Pivot, Figs. 5137, 5140, 5143, 5144.—The step-piece is a massive piece of wrought iron of the same breadth as the leaf, and 5 ft. 2 in. long, and is strongly bolted to the bottom cross-piece. The brass 1·14 ft. in diameter was bored to 8·65 in., and furnished internally with a disc of steel presenting a concave surface on the lower side. The pivot is of cast steel, it is 7·87 in. in length, and 7·87 in. in diameter, and terminates in a convex surface. Thus, rotation takes place between two steel surfaces, between which it is impossible for foreign matter to get, since the socket is inverted. It must be remarked, too, that an annular space of ·39 in. is allowed between the pivot and its socket, an amount of play that seems indispensable to the proper working of the gates, when, by long service, or in consequence of the interposition of some obstacle, they have got somewhat out of shape in those parts which are in contact with the masonry. The step-piece and pivot are eccentric with respect to the quarter circle of the hollow quoin to prevent friction while the gate is being opened. The eccentricity is about an inch, measured upon the bisectrix of the angle formed by the axis of the gate when open with the continuation of the same axis when shut.

5143.

5144.

The Ring, or Upper Axis.—This is a piece of forged iron similar in form to the step-piece, except that the portion which is seized by the collar is solid, and is 11·8 in. in diameter. The collar is also of forged iron, and is held by two square iron straps 3·9 in. anchored in the masonry.

The Roller, Figs. 5137, 5139.—The fixing of this roller presents all the most recent improve-

ments. Its mean diameter is 25½ in., and its breadth 7⅞ in. It is fixed beneath the leaf in the recess already alluded to. The roller is slightly conical, and is mounted upon a long axle, 4·95 ft., after the example of the Calais gates; this is a good arrangement, enabling the roller to work without sliding upon its path. The direction of the axle, produced towards the pivot, passes through the vertical of the centre of gravity of the leaf; its bearing inside the roller is 4·61 in. in diameter, and it penetrates a support capable of being regulated in height. The other bearing 5·90 in. in diameter, works in a fork or slot in an iron support capable of being regulated by a large vertical column of 39·3, having a screw thread on its upper portion, and held by a fixed nut upon the top of the leaf. This column passes up through a hollow cylinder, the three lengths of which, corresponding exactly with the three chambers of the leaf, are rendered water-tight and adjustable by means of right and left screw-threads which serve to compress india-rubber washers till they are brought in contact with the column, thus serving at the same time as guides. Fig. 5145 shows the tight collar through which the column passes at the floors of the chambers. The roller path is of cast iron, composed of eight segments of about 5 ft. in length, and joined by fish-plates fixed with four bronze bolts. It is 9 in. in breadth, and is sunk 17·7 in. in the masonry of the floor.

5145.

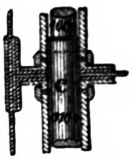

Accessory Parts.—At a height of 4·42 ft. above the leaves, a foot-board or bridge exists on a level with the side walls, provided with a hand-rail, the standards, Figs. 5138, 5146 to 5148, of which are jointed so as to allow it to be easily lowered or raised by hand. Thus when the gates are opened, no part exceeds the height of the side walls, and consequently nothing is in the way of ships passing in and out. The chain attachments, Figs. 5149, 5150, are at the extremity of the leaves and in about the middle of their height. They are stout cylindrical pieces of iron, forming a half-link, 15·7 in. in diameter, movable horizontally about a vertical axis firmly fixed to the corresponding cross-piece. Four plate-iron cheeks or brackets, Fig. 5151, faced with wood receive the thrust of the *portes-valets*, or supporting gates. Double-geared hand-crabs are used to open and shut the gates, the winding drum being, for the former purpose, 15·7 in.; and for the latter, 30·6 in. in diameter. The timber facings of the shutting sill and posts are of green-heart.

5146.

5147.

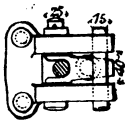

5148.

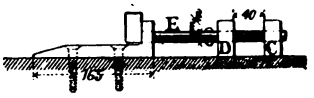

5149.

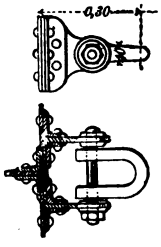

5150.

5151.

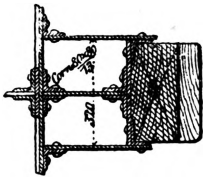

5152.

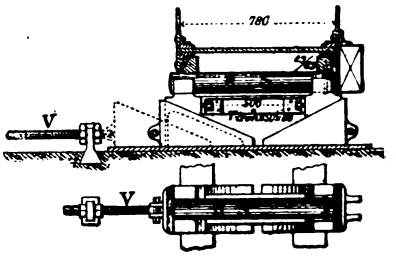

5153.

Constructing and Placing in Position.—The gates were built in the upright position in the chambers themselves. Each leaf rested upon a kind of stocks formed of double wedges, which kept it 3·93 in. above its destined final position, its distance from the hollow quoins being about 2 yds. The direction of the leaves, oblique with respect to the side walls, was such that, when continued, it corresponded with the pivot. To place them in position, therefore, a double operation was necessary, namely, a translation of 2 yds., and a descent of 3·93 in. to box the pivot; and it was requisite to perform these operations without a shock, on account of the instability of the leaf consequent on its great relative height. Two very simple and inexpensive appliances, Figs. 5152, 5153, were employed for this purpose, and by their means the gates were placed in position in a few hours. Each of these consisted of an iron roller 3·93 in. in diameter resting upon two bearing blocks kept at an invariable distance, the lower faces of which were inclined at 21° to the horizontal. An annular projection upon one end of the roller entered a straight groove fixed upon the down-stream side of the leaf for the purpose of maintaining the motion of translation in the required direction. The two bearing blocks rested upon two cast-iron wedges inclined like the blocks at 21°, but twice as long, so that by gradually increasing their distance apart by means of screws, the rollers were let down slowly and gently. When one leaf was finished, it was made to rest wholly upon the rollers by knocking out the wedge-shaped side blocks; it was then transported to its position by means of rack and pinion, and let down upon its pivot in the manner described above. The collar was then fixed and the roller frames were free to be used for the other leaf.

The various heights of the tide, namely, high water of the equinoctial spring tides, high water of ordinary spring tides, high water of ordinary neap tides, mean sea-level, low water of ordinary neap tides, low water of ordinary spring tides, and low water of equinoctial spring tides, are marked, as before, on the vertical section 1, 2, 3, 4, 5, 6, 7, respectively.

The systems and modes of construction of lock-gates adopted in this country are;—

Wooden Gates.—The old type of English gates was the same as that originally adopted in France, and which we have already described. But the necessity for larger gates consequent on the introduction of steamers led to the adoption of other systems in which timber of ordinary dimensions could still be used. The first of these systems was the *polygonal*, in which the cross-pieces constituted a kind of trusses intersected by one or more vertical pieces so as to form several panels in juxtaposition and bound with iron. The up-stream face of these gates was thus composed of a series of plane surfaces making very obtuse angles with each other. At the present time, polygonal gates are *curved*, at least on the side of the pressure, so that the two leaves when shut form on that side one cylindrical surface, whilst on the other side the two arcs or the two polygonal perimeters are not confounded.

The rise of the mean arc of the leaf is very variable; though generally included between $\frac{1}{10}$ and $\frac{1}{15}$ of the chord, it occasionally exceeds those limits. The two radii of curvature are determined carefully to obtain a proper thickness at the three principal points of the leaf, namely, the heel-post, the middle, and the mitre-post. These thicknesses are, as a mean, in the following proportions for wooden gates;—7 to 8 for the middle, 6 for the heel-post, and $4\frac{1}{2}$ at the extremity of the mitre-post. Evidently there is nothing absolute in these figures. The rise given to the mitre-sill is considerable. The ratio between the span and this rise varies between 3 and 5, whilst in France it is about 5. English engineers are generally in favour of cylindrical gates; they possess undoubtedly the advantages of being more readily constructed of ordinary-size timber and of requiring less material; besides which their form, considered from the point of view of resistance, is more rational than that of straight gates, or of those curved only on the up-stream side. But, on the other hand, they have the disadvantages of requiring curved sills, which are more expensive and difficult of construction, and of being incapable of receiving support from ties. In our article on Docks we gave a Table showing a comparison between straight and cylindrical gates in various conditions, to which we must refer the reader for further information on this matter.

Weight and Volume of a Leaf.—The weight of a leaf, not including the accessory pieces fixed in the masonry, nor the small quantity of wood, the weight of which does not differ much from that of the water displaced by it, is about 66 tons. On the other hand, the volume of the two air-chambers, always immersed in the neap tides, is about 2204 cub. ft., corresponding to a lightening of $61\frac{1}{2}$ tons, say 61 tons, allowing for the weight of the water retained upon the diaphragm by the vertical arm of the angle-irons, and we have a load upon the pivot and roller of about 5 tons.

5154.

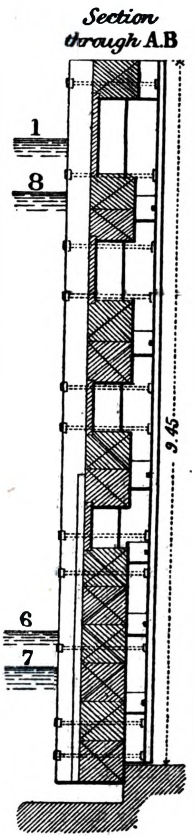

The sea communicates freely through three orifices with the upper water chamber, which consequently fills and empties itself as the tide rises and falls. This arrangement possesses the great advantage of keeping a constant weight of about 5 tons upon the pivot and roller in all tides, which enables the gates to be easily opened and shut, and prevents any sensible wear and tear of the parts in motion. In case of waves beating heavily against the gates, their air-chambers may be partially filled with water; this water may be afterwards removed by pumps.

The Grimsby Docks, on the Humber, Figs. 5154, 5155.—These gates, which were constructed in 1848, are remarkable for the particular system on which they were designed. They are *straight* in form, and their cross-pieces, consisting of a single piece, are trussed with iron tie-rods.

The entrance to the docks consists of two locks, one 70 ft. broad, and 300 ft. long, and the other 45 ft. by 200 ft. We shall notice only the double gates of the larger lock. The greatest difference of level during the equinoctial tides is 23 ft. The engineer had prepared his designs for iron gates, but as oak of sufficient dimensions was found cheap, wood was adopted, and the gates are really mixed or compound, for each of the two vertical pieces on the down-stream side, which project 11·8 in., has six tension-rods attached to it, forming trussed girders with the cross-pieces. Each tie is composed of three pieces; the middle piece, of flat iron $1\frac{3}{4}$ in. × $1\frac{1}{2}$ in., terminates in a fork at each end, and the others are of 2-in. round iron, having a head on one end, and a stout nut on the other, lodged in an indent at the back of each post. To ease the tenons and joints of the cross-pieces, blocks, or wedge-shaped brackets, are inserted between the cross-pieces against the posts.

The oak cleading on the up-stream side is 3 in. thick, and is rabbeted into the cross-pieces and posts; the joints of these latter are strengthened externally by iron strips, 5 in. × 1 in., let into the wood, and bolted through, all the bolts used being galvanized. The gates, when first erected, rested upon a roller placed externally on the up-stream side; but the deformation of the leaves caused by the reaction due to this arrangement, necessitated the placing of another roller on the other side in order to bring the strain on the centre of the leaf. A cast-iron box was let into the sill to receive this roller, and provided with a special valve to keep out foreign substances.

5155.

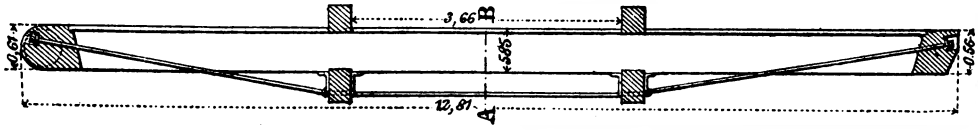

The pivot and step-piece are of cast iron; the former is 9 in. in diameter, and the step is lined with bronze.

The cost of this pair of gates was 2300*l.*, exclusive of the rollers and the hydraulic machinery, of which this was the first application to dock-gates. It is worthy of remark, that *creosoting* was in this case perfectly successful; in 1864, when the gates were examined, it was found that the timber which had been subjected to the operation was quite sound, whilst other portions of 14-in. scantling, that had not been so treated, was half eaten away.

The following are some of the principal dimensions;—Span 70 ft.; height of the leaf above the mitre-point, 31 ft., thus giving a surface of 2170 ft.; length of the leaf from outside to outside, 42 ft.; height of the leaf, 32 ft.; thickness of the leaf in the middle, exclusive of the ties, 1 ft. 11 in.; thickness at the heel-post, 2 ft.; thickness at the mitre-post, 1 ft. 10 in.; height of sill, 18 in.; breadth of the parts in contact, 10 in. The weight of a leaf is about 74 tons, and the quantity of wood employed in its construction about 2200 cub. ft.

The figures 1, 2, 3, 4, on the vertical section, represent high water of the equinoctial tides, high water of ordinary spring tides, low water of ordinary spring tides, and low water of the equinoctial tides, respectively.

Wooden Gates on the Mersey.—During the last twenty years all the important lock-gates on the Mersey, at Liverpool and at Birkenhead, have been constructed on the system adopted by Hartley. The satisfactory way in which they have fulfilled their purpose, and the perfectly sound state in which they still are—even the oldest of them—have induced G. T. Lyster, chief engineer of the Mersey Docks, to continue the application of his predecessor's system. This consists essentially in the exclusive use of green-heart timber of relatively small dimensions. This purpose is effected by constructing each leaf of several smaller leaves, having each its posts and cross-pieces. These partial leaves, or as they may be called, *voussoir-panels*, are held together by tie-pieces on the concave side, and stout iron bands and bolts. The tie-pieces extend the whole length of the leaf from heel to mitre-post. The leaf is curved on the side of the pressure, and polygonal on the other side. The cleading consists of vertical planks 3 in. thick of green-heart timber, rabbeted into the cross-pieces. The shutting sills are of masonry and curved; their rise is about a fifth of the space. We have selected the Canada Dock gates as an illustration of the system.

The Great Gates of Green-heart Timber at the Canada Docks, Liverpool, Figs. 5156 to 5159.—These gates were constructed in 1857, and have a span of 100 ft. They are double and form a lock about 150 yds. in length. The gate-chambers or recesses are arched like the gates, and their greatest depth is about 7 ft. 6 in. The sill is laid bare to a depth of about 11 in. at low water of spring tides, and about 2 ft. 6 in. at the equinoctial tides. Yet the sills of the Canada Docks are lower than those of any other locks at Liverpool. It would not be desirable to have the sills lower, because the Mersey frequently brings in large quantities of fine sand. In the present condition of things, the floors of the chambers may be easily cleansed at the spring tides. The mitre-point is 19 ft. from the line normal to the side walls, and passing through the centres of the two pivots.

Each leaf is formed of four panels of about the same breadth, that is, between the heel and mitre posts are three intermediate posts, sensibly equidistant. The total height of the leaf is 35·50 ft.; but in the upper part there is a bay without cleading which reduces the virtual height to 29·50 ft. The cleading, which is 3 in. thick, is upon the up-stream side only.

Cross-pieces.—Six cross-pieces at unequal distances apart and of variable dimensions connect the heel and mitre posts. The depths of the solid and open portions of the leaf thus formed are as follows;—

	Feet.
First (bottom) cross-piece formed of 12 pieces, 6 deep and 2 thick	7·33
Space in which the sluices are	1·41
Second cross-piece formed of 8 pieces, 4 deep and 2 thick	4·28
Space with cleading	1·91
Third cross-piece formed of 6 pieces, 3 deep and 2 thick	2·86
Space with cleading	3·02
Fourth cross-piece formed of 4 pieces, 2 deep and 2 thick	2·39
Space with cleading	4·40
Fifth cross-piece formed of 4 pieces, 2 deep and 2 thick	1·90
Height of the retaining portion	29·50
Space without cleading	4·92
Sixth (top) cross-piece of a single piece	1·08
Total height	35·50

Each cross-piece is strengthened by a tie along the polygonal face of the leaf, extending nearly from one extreme post to the other. These six tie-beams have in the middle a horizontal thickness of 14·9 in., which diminishes to about the half towards the ends. The depth of these strengthening pieces is 1·80 ft. for the first two, and 1·47 ft. for the others, with the exception of the last, which is equal in depth to the top cross-piece, namely, 1·08 ft. The large bottom cross-piece has, besides its tie-beam, a piece of green-heart timber 1·47 ft. in depth, bolted flush with its under side, so as to shut against another timber facing on the shutting sill.

Taking a horizontal section of the leaf through the lower portion, Fig. 5159, we find the following thicknesses;—At the heel-post, 2 ft. 4 in.; at the first intermediate post, 2 ft. 5 in.; at the second intermediate post (the middle of the leaf), 2 ft. 2 in.; at the third intermediate post, 2 ft. 2 in.; and at the mitre-post, 1 ft. 8½ in.

The up-stream face of the leaf is vertical throughout, and curved with a radius of 96·4 ft.; in other words, the chord joining the extremity of the diameter of the heel-post with the edge of the mitre-post being 36 ft., the versed sine of the arc is 4·17 ft. On the down-stream side the three

intermediate posts and the mitre-post decrease in thickness upwards from the third cross-piece, till at the top they have the following dimensions;—First intermediate post, 1 ft. 9½ in.; second post,

5156. 5157.

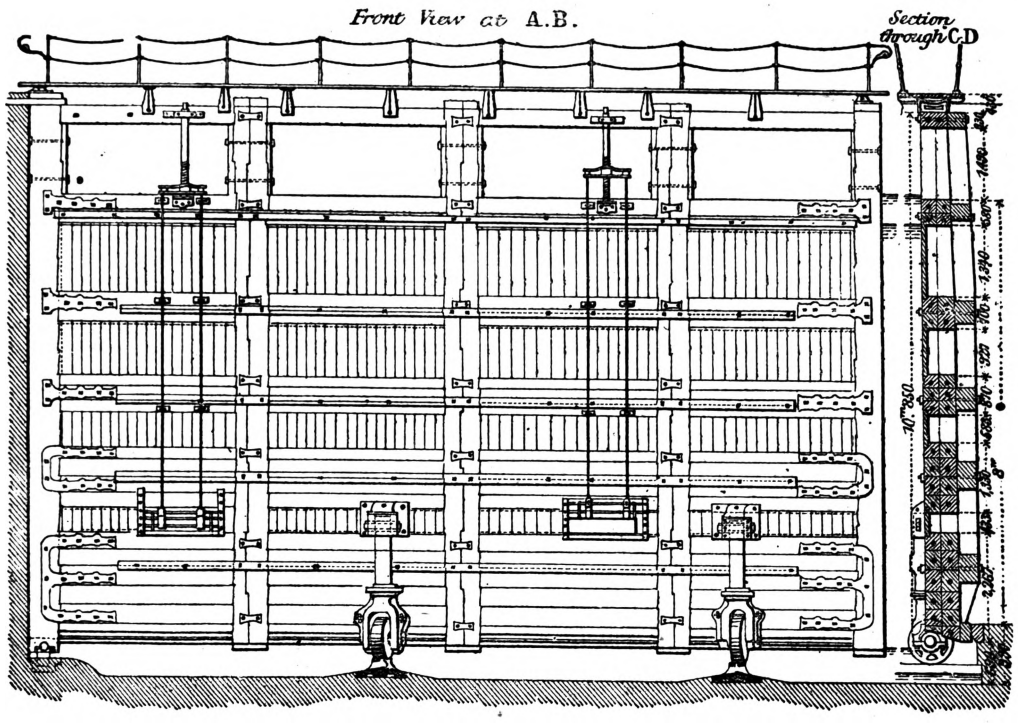

5158.

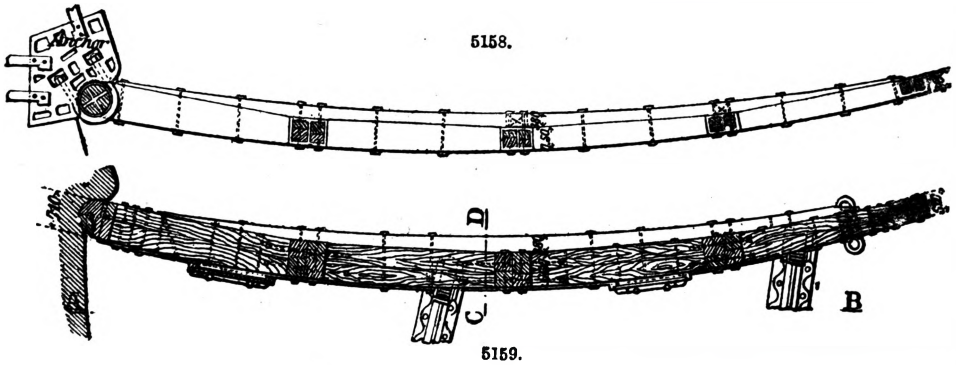

5159.

1 ft. 7 in.; third post, 1 ft. 5 in.; and mitre-post, 1 ft. 2 in. The cross-pieces are curved on the side of the pressure, but straight on the other side between the posts with which they are flush. It follows from this diminution of thickness towards the top that the radius of curvature, which is 96·4 ft. at the bottom, is about 124 ft. at the top, in consequence of the flattening of the leaf.

The Heel-post.—The heel-post is 2 ft. 6 in. square in section, and about 37 ft. 3 in. in height, as it stands several inches above the top cross-piece and extends the same distance below the lowest. Its ring or upper axis is 21·6 in. in diameter, and is covered with a cast-iron cap 25·5 in. in outer diameter, upon which the wrought-iron collar fits. To the lower end of the post a bronze step-piece is fixed. The horizontal section shows that it is formed of four pieces, two rectangular, and two in the form of a quarter circle, that is, a sector equal to the quadrant, all unequal in size to prevent the joints from being in line with each other. The pieces are held together by three rectangular keys of green-heart of 1 in. square section, tightly fitting two grooves running from top to bottom in two adjacent pieces, and three systems of bolts. The first, of 1½ in. diameter, hold the two rectangular pieces together. The second, placed in the direction of the length of the leaf, hold each rectangular piece to its adjacent sector-piece. The heads and nuts are deeply countersunk. The third group of bolts, 2 in. in diameter, hold the cross-pieces against the post. For this purpose a hole was bored to a depth of 2 ft. into the end of each portion of the cross-piece, and the bolt fixed in by means of a kind of key passed through transversely. The projecting portion of the bolt is provided with a nut countersunk into the back of the post. The face of the post is notched to receive the cross-pieces, which are thus lodged in indents and fished on both sides.

The Mitre-post.—The mitre-post is in one piece. A section through any point below the middle

gives a square of 1·69 ft. side, the up-stream edge of which has been eased off to reduce the breadth of contact to about 8 in. In its upper portion, the thickness of the post is reduced to 1·18 ft., whilst its breadth remains constant; the upper and lower ends of the post are enclosed, the former in an iron, the latter in a bronze hoop, or rather rectangular band, having, in the case of the upper one, plates or notches capable of being laid hold of by a crow-bar when the gates are closed so as to bring them exactly opposite each other. The mode of fixing the cross-pieces to the mitre-post is identical with that adopted for the heel-post. The stout pieces of ironwork serving to fish the joints are similar, and are held by 1⅜-in. bolts.

Intermediate Posts.—These are formed of two half-posts connected with the cross-pieces in the manner described for the heel-post. Each half consists of two rectangular pieces. When it is required to put the four great portions of the leaves together, the intermediate half-posts are placed together and the eight indents or scarfing notches cut on their height, ensure their holding in the vertical direction. Iron fish-pieces indented into the two faces of the post, prevent the two halves from separating laterally. Thus composed, they have the following breadths throughout their height; next the heel-post 2·22 ft., in the middle of the leaf 2·16 ft., and next the mitre-post 2 ft. The thicknesses, which are variable, have been already given. These posts are bound with cast iron at their upper, and with bronze at their lower ends.

Principal Iron Pieces.—Allusion has already been made to the strong iron strips binding the end posts to the cross-pieces. They are of wrought iron, from 4¾ in. to 5¼ in. broad, and 1¼ in. thick. The form of these pieces will be seen on Fig. 5156, and as they are let into the wood it will be noticed that they hold partly by their form. Upon the up-stream side of the five cross-pieces strips of iron from 6·30 in. to 4·72 in. broad are bolted to the tie-pieces on the opposite side with 2-in. bolts. The several pieces of which a cross-piece is composed are bolted together with horizontal and vertical 1½-in. bolts. The chain attachments are 4·60 ft. above the wall and at the same distance from the end of the leaf, and therefore at a point near several iron strengthening pieces.

The Rollers.—Each leaf is supported upon two rollers placed one at a distance of 23·32 ft. from the pivot, and the other at twice that distance. They are both 11·8 in. broad, but are of different diameters, that of the one farthest from the centre of rotation being about 3 ft., and that of the other 2¾ ft. The floor of the chambers is 3¼ ft. below the edge of the shutting sill; the portions beneath the pivots and roller paths are raised, as shown in the figure, for the purpose of keeping them free of accumulations of sand. The height of these portions above the floor is, including the rails of the the roller path, 14½ in. The consequence of this is that the axles of the rollers are a little above the bottom of the leaf, in which a passage has been cut for the roller. The latter are placed a little towards the outside of the leaf in order to diminish the depth of the passage, and to bring the shaft to the roller-framing up to the face of the leaf to a bearing box provided with two regulating keys, and situate between the first and second cross-pieces. The roller paths are of a special form. Between their upper and lower faces, 12 in. and 36 in. broad respectively, there are a series of openings communicating with the top of the path so as to allow deposits of sand to drop down upon inclined planes, by which they are ejected from the cast-iron segments.

Sluices.—There are two sluices in each leaf between the two lower cross-pieces. They are of cast iron, and are 5 ft. broad. Two rods reaching to the top of the leaf, and connected there by a cross-head, and capable of being moved up and down by means of a screw and nut, form the working connections of the paddles.

Fenders.—The concavity of the down-stream face of the gate protects it from the friction of passing vessels. But for greater security, vertical pieces are fixed against the tie-beams over the intermediate posts. These pieces are nearly square in section and are of deal, as they do not give additional strength, and, besides, are not needed on the lower third of the leaf.

Foot-path Platform.—The foot-path platform is about 6 in. above the side walls, and has a breadth of 4 ft. 6 in. throughout the length of the leaf. It is supported at intervals upon the top cross-piece by cast-iron supports. The two hand-rails are each formed of ten wrought-iron standards connected at the top and in the middle by chains, as shown in the figure. Each chain is fixed to one standard by an eye-bolt, and is hooked to the next. The standards are supported in small deep sockets upon the face of which they rest by a broad base. This arrangement, which is everywhere adopted in the Mersey Docks, enables them to be easily and quickly taken down and replaced.

Weight and Volume.—Each leaf contains 3516 cub. ft. of green-heart timber, the weight of which is about 113 tons. The weight of the iron used in the construction is 22 tons. The total weight of a leaf is therefore 135 tons. The total volume of the leaf may be taken as 3637 cub. ft. Under ordinary circumstances the immersed portion corresponds to the level of the top of the fourth cross-piece, and its volume is about 2860 cub. ft.; thus the lessening of the weight is about 81 tons. Hence it follows that the weight upon the pivot and the two rollers is 54 tons. say, in round numbers 18 tons upon each roller. These gates are opened and shut by hydraulic machinery, and the operation requires three minutes.

The Wrought-iron Gates of Jarrow Docks upon the Tyne, Figs. 5160 to 5162.—These gates were constructed in 1858 on the model of the Victoria gates, but with certain improvements which obviated the grave defects possessed by the latter.

The Wrought-iron Gates of the Grand Surrey Docks, London, Figs. 5163, 5164.—These gates are remarkable for a peculiar construction both of the leaves themselves and of the horizontal and vertical diaphragms of which their framing is composed. The former are curved, but have on the concave side a straight tie-piece, constituting the chord of the arc, which struts against a straight sill. The latter, with the exception of those enclosing the water-tight chambers, have *lattice-webs*. The leaves are, like those of the Jarrow Dock gates, curved at the bottom, so as to raise the pivots clear of all obstructions, and they support, in ordinary equinoctial tides, a pressure resulting from a difference of level of 20 ft. The angle formed by the two leaves being 148°, it follows that the

versed sine of the arc is only about one-seventh of the span. Each leaf has nine and eleven horizontal compartments between the heel and mitre posts, the wooden facings of which are of oak.

5160.

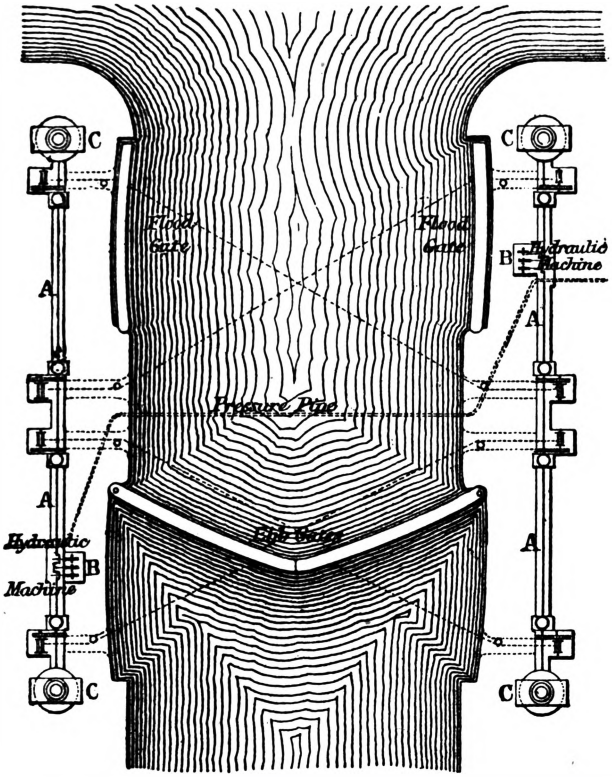

5162.

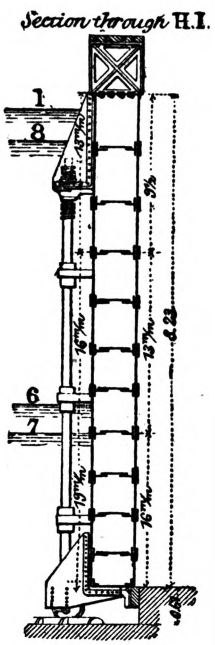

5164.

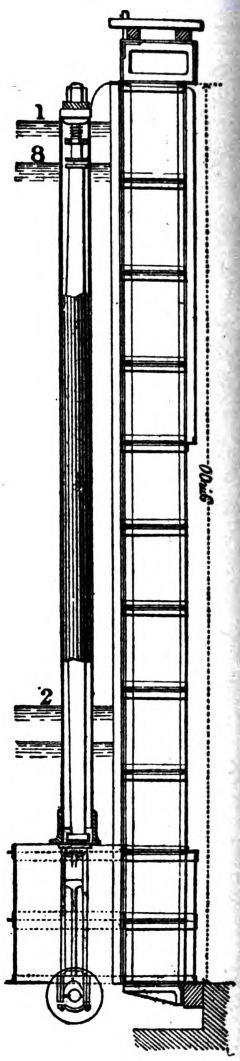

The vertical diaphragms are numerous, there being, besides the two end ones, seven intermediate. The angle-irons employed are 3 in. by $\frac{3}{16}$ in. thick. The roller is external to the curve, as in the case of the Victoria Dock gates, and is 2 ft. in diameter and 6 in. broad. Its regulating support is a vertical hollow column of cast iron, of 10 in. diameter in the middle, where it is greater than at the ends, and 1 in. in thickness. The upper portion of the down-stream side of the leaf is protected by creosoted planks 4 in. thick and 14 ft. long. The principal dimensions are;—Span, 50 ft.; height of the leaf above the mitre-point, 29·5 ft.; thickness of the leaf in the middle, 2·42 ft.; thickness at the ends, 2 ft. The thickness of the skins varies between $\frac{5}{8}$ and $\frac{5}{16}$ in. Each leaf weighs 52 tons; it displaces at high water 49 tons, and at low water 20 tons. The weight of iron in a leaf is approximately 45 tons.

5161.

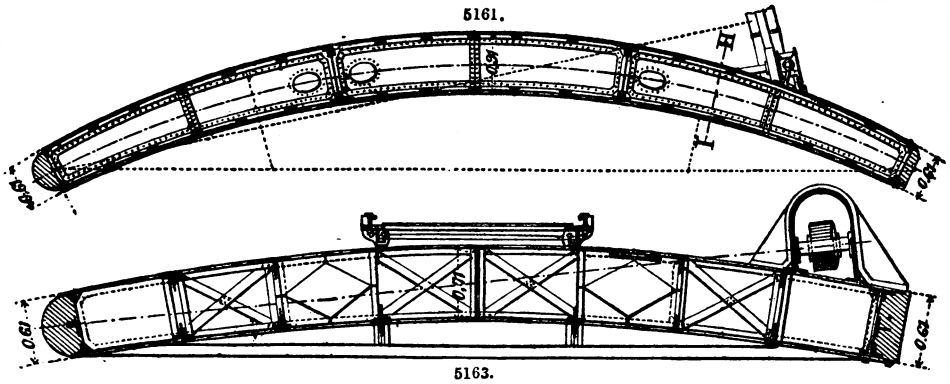

5163.

Having described the nature and construction of some of the most important lock-gates now in existence, S. Périssé, in the paper before referred to, considers which of these types may be adopted as the best. But first it is desirable to determine the most suitable span, or rather its limits, since

the breadth of locks cannot be absolutely uniform. It may be admitted, however, writes Périssé, that in harbours already possessing large entrances, it would be useless to exceed the breadth of 70 ft. in future. It must be observed that the floor of locks is nearly always curved in the form of an inverted arch, in order to resist better the under pressures; and the exaggeration of the breadth would allow the passage of large screw-steamers, the adoption of which seems to be getting general, to pass out of the axis of the lock, that is, get into a part where the depth of water is less. But, on the other hand, it is desirable not to go below 55 or 60 ft., if we wish to be prepared for possible future requirements; 60 ft. appears a good mean.

As to the best type of gate, it is evidently that which utilizes the assistance that the vertical lends to the *horizontal, equal, and equidistant cross-pieces.* The advantages of this compound system are indisputable in the case of wrought-iron gates. But the advantage is not so apparent in the case of wooden gates. It is more difficult to procure a series of pieces of the same than of various dimensions; and the lightness of wooden gates increases with the volume displaced in neap tides, and when the cross-pieces are equidistant, this volume evidently decreases. Wooden gates with equidistant cross-pieces are therefore heavier.

With regard to the question of *form*, whether straight or cylindrical, of the cross-pieces, it may be remarked that curvature gives a smaller quantity of material, and is more economical for wooden gates, notwithstanding the greater cost of the shutting sills. But in the case of iron gates this economy is purely theoretical; it does not exist in fact, first, by reason of the necessity of giving a greater thickness to the skins than curved leaves would require, and, second, the curvilinear form on both sides increases the difficulties of construction in iron leaves, which, it must not be forgotten, have to be water-tight in their air-compartments. Périssé is of opinion, therefore, that in iron gates the cross-pieces should be straight on the side farthest from the pressure. In wooden gates the cylindrical form has the disadvantage of not allowing the use of suspension ties, which are indispensable for suspension gates. But when rollers are used, curved leaves of green-heart timber, like those on the Mersey, should be preferred to all others, on account of the great durability of green-heart in sea-water, and the possibility of employing timber of all dimensions.

Nature of the Materials.—A careful calculation of cost will show that wrought-iron gates are the least expensive; and we saw in the case of the Boulogne gates that they possess the following advantages;—1. Any degree of lightness obtainable by increasing the dimensions of the air-chamber. 2. Greater rigidity. 3. Capability of being more easily moved, and at any height of the tide, when the gates are upon rollers. 4. Capability of being rendered heavier if required, to resist the action of waves. 5. Constant load upon the pivot and roller, unless in exceptional circumstances. 6. Possibility of suspending them without suspension ties, as the skins may serve the same purpose. 7. Facility for examination and repairs. 8. Greater durability.

This enumeration is conclusive in favour of iron gates as compared with wooden gates. As for those which we have called mixed or compound, they ought certainly to be abandoned.

Wooden gates, however, have still numerous partisans. They are more easily constructed and replaced. It may be objected that iron gates have to be constructed in the upright position, and that this constitutes a difficulty in case of replacing, and a greater expense, as wooden gates may be constructed in the horizontal position. To this it may be answered;—1. That the upright position was adopted for the second wooden gates at St. Nazaire, and that the operation of letting them down was perfectly successful; and, 2. That if the cost of erection is greater, the saving resulting from the superior durability is much greater still.

In fine, wrought-iron lock-gates are preferable in maritime ports, unless the dimensions are to be very small, in which case the leaves would not be sufficiently thick to be readily accessible in all parts. The thickness of the iron shell near the posts should not be less than 2 ft., to be increased towards the middle as indicated by the calculation of the strains. There will always be a practical advantage in exaggerating, so to speak, the thickness of the leaf, provided we reduce the webs of the horizontal diaphragms to $\frac{5}{16}$ in. or $\frac{11}{32}$ in., or form them of lattice, with the exception, of course, of the one which closes the air-chamber. Above the chamber the iron plating forming the skin, no longer indispensable, may be suppressed, either upon the down-stream side only, or upon both sides, and wooden planks substituted, placed close together, and calked on the up-stream side, whilst on the opposite side they would be placed a distance apart. In such a case the injury caused by vessels coming in contact with them would be of small importance, as repairs might be quickly and cheaply effected. This arrangement would effect a considerable saving, and would not suppress one of the advantages pointed out, if the precaution were taken to introduce into the upper iron framing oblique pieces, to form trussings and bracings, in the case of the gates being suspended.

It will be advisable to exclude the employment of angle-irons less than 3 in. × 3 in. in all the important parts, in order to be able to use $\frac{3}{4}$-in. rivets; and the wood facings of the post and shutting sill should be of green-heart timber.

Canal Locks.—The following are some of the ordinary dimensions and proportions of canal locks;—The mitre-sills should rise from 6 to 9 in. above the floor; the versed sine of mitre-sill, from $\frac{1}{7}$ to $\frac{1}{5}$ of breadth of lock; and the clearance in depth of the recesses for the gates be $\frac{1}{10}$ of thickness of gate; clearance in length, $\frac{1}{7}$ of length of gate. Least thickness of the side walls at the top, about 4 ft. Greatest thickness at the base, fixed according to the principles of the stability of walls, usually from $\frac{1}{4}$ to $\frac{1}{3}$ of the height. Length of side walls of head-bay above gate-chamber, about $\frac{1}{5}$ of breadth of lock. Large counterforts opposite hollow quoins to have stability enough to withstand the calculated *transverse thrust* of the gates. The *longitudinal thrust* of the head-gates is borne by the side walls of the lock-chamber; that of the tail-gates by the side walls of the tail-bay. To give the latter walls sufficient stability, the rule is to make their length as follows;—Breadth of lock × greatest depth of water ÷ 15 ft. Versed sine of lift-wall, from $\frac{1}{12}$ to $\frac{1}{7}$ of breadth of lock. Floor of head-bay; least thickness, from 10 in. to 14 in. Floor of lock-chamber; versed

sine, about $\frac{1}{15}$ of breadth; thickness, from $\frac{1}{15}$ to $\frac{1}{8}$ of breadth, according to the nature of the foundation.

Foundations of various kinds have been sufficiently explained. It has only to be added that when a lock is founded on a timber platform, longitudinal pieces of timber extending along the whole length of the foundation are to be avoided, lest they guide streams of water along their sides; that transverse trenches under the foundation, filled with hydraulic concrete, are a good means of preventing leakage; and that, in porous soils, the whole space behind the lift-wall and under the floor of the head-bay may be filled with a mass of concrete.

Length of apron from 15 to 30 ft.

The dimensions of the different parts of the gates are to be computed according to the principles of the strength of materials. It appears that the factor of safety in many actual lock-gates is as low as 3 or 4. This can only be sufficient by reason of the perfect steadiness of the load.

See CANAL. DOCKS. HYDRAULIC MACHINES. MATERIALS OF CONSTRUCTION, *Strength of*.

LOCK-CHAMBER. FR., *Chambre d'écluse*; GER., *Schleusenkammer*; SPAN., *Esclusa*.

The enclosed space between lock-gates into which vessels enter, is the *lock-chamber*.

See DOCK. LOCKS AND LOCK-GATES.

LOCOMOTIVE. FR., *Locomotive*; GER., *Locomotive*; ITAL., *Locomotiva*; SPAN., *Locomotora*.

No combination of mechanism to transmit power has effected so complete a revolution in human affairs as the locomotive. The honour of claiming such an immeasurably great invention has been much coveted, as giving lustre not only to the particular family of the inventor, but also to his nationality; and accordingly the most plausible arguments have been used, and the utmost ingenuity exercised to take the credit from its legitimate possessor. To Richard Trevithick is the merit of inventing the locomotive really due. He, about the year 1801, experimented with a working machine for locomotive purposes, acting solely by the expansive force of steam; in 1802, he, in conjunction with A. Vivian, patented the invention, and in 1803 actually ran the locomotive in the streets of London. The locomotive was not a commercial success in Trevithick's hands, but since his time it has been improved by inventors too numerous to mention, and it is now the principal means of land transport in use throughout the world.

The chief parts of a modern locomotive steam-engine are;—

The boiler, partly filled with water for the generation of steam.

The engine proper, by means of which the action of the pressure of the steam is changed into the motion of the working parts of the engine, which consists of steam-cylinder and valve gear.

The framework, carrying boiler and engine, and consisting of frames with springs, horn-plates, buffers, axle-boxes, and like details, and the wheels and axles.

These parts are common to all locomotives, which may in general be classified as express engines, representing speed; goods engines, representing loads to be drawn; and, further, as passenger engines, combining a moderately high speed with a considerable traction power, and used for mixed trains, or trains running only over short distances, between stations.

These three classes of engines must necessarily be so constructed as to carry with them sufficient fuel and water, to enable them to run over a certain distance without prolonged stoppages. Express and goods engines are always provided with a separate vehicle for carrying fuel and water, called the *tender*. Passenger engines are often constructed so that they are provided with water-tanks and coal-bunkers, thus requiring no extra tender. Engines constructed in such a manner are called *tank engines*.

These classes are all subject to change in the arrangement, and in this respect may be also generally divided into locomotives with *outside* cylinders, and locomotives with *inside* cylinders; that is to say, locomotives in which the steam-cylinders are placed either *outside* the frame-plates, or *between* the frame-plates. In the former case all the axles of the locomotive are straight, the cranks being fixed at the extreme ends of the driving axles, or are formed by one of the spokes of the driving wheels, whilst in the latter case the cranks have to be placed between the two driving wheels, thus requiring *cranked axles*.

Figs. 5165 to 5193 represent the type of a complete engine and tender, in which almost all parts of a locomotive may be found to be represented, and indicated by corresponding numbers. The figures show an express engine, as built for the Great Northern Railway from the designs of Patrick Sterling, locomotive superintendent to that company. The following are the names of the various parts;—

The three main parts of the boiler, Fig. 5171, are;—
1. Barrel of boiler.
2. Fire-box.
3. Smoke-box.

The barrel consists of—
4. The shell of the boiler.
5. Heating tubes, in the present case 217 tubes.
6. Casing of the boil
7. Man-hole.

The fire-box, Fig. 5172, consists of—
8. Inside fire-box, with
9. Tube-plate.
10. Outside fire-box.
11. Fire-door, Fig. 5173.
12. Ash-box.
13. Fire-bridge.
14. Fire-grate, with bars and cross-pieces.
15. Roof-stays.
16. Longitudinal stays.

The smoke-box, Figs. 5171, 5174, of—
17. Tube-plate at smoke-box end of boiler.
18. Smoke-box door.
19. Smoke-box door fastening.
20. Funnel.
21. Shell of smoke-box.
22. Casing of smoke-box, forming in its continuations cylinder casings.

The fittings of locomotive-boilers are, for the barrel—
23. Brackets for hand-rails, Fig. 5175.
24. Delivery or admission valve of feed-water.
25. Place of discharge cock.

5166.

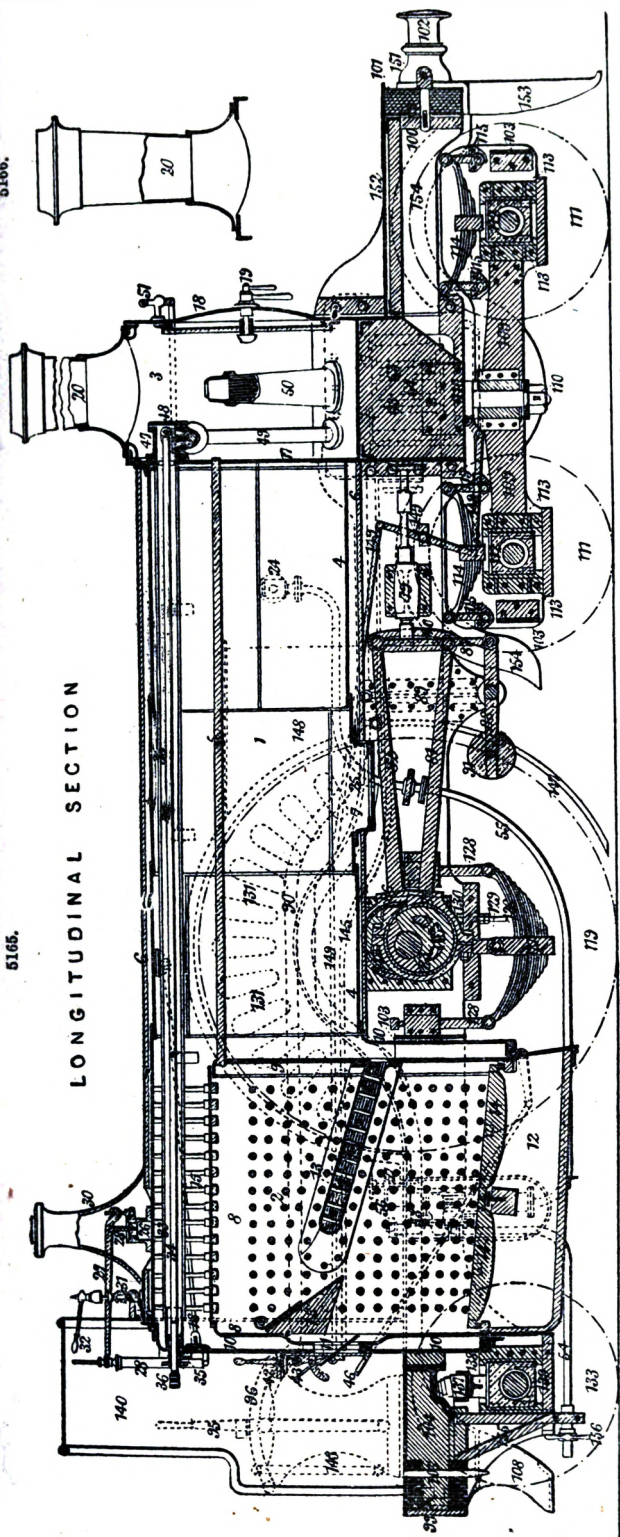

5165.

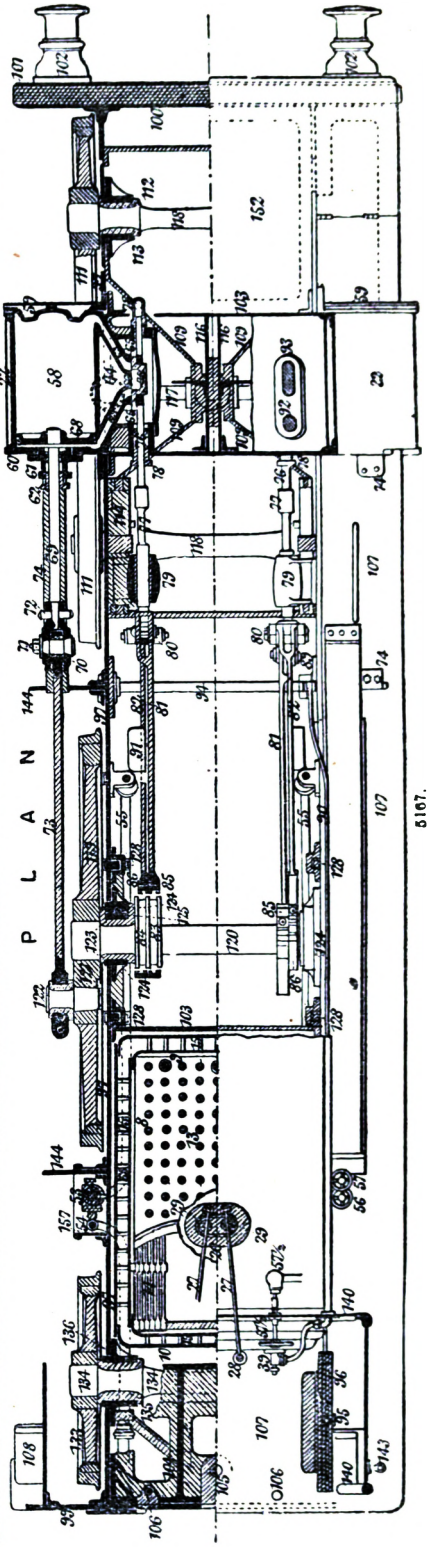

5167.

5168.

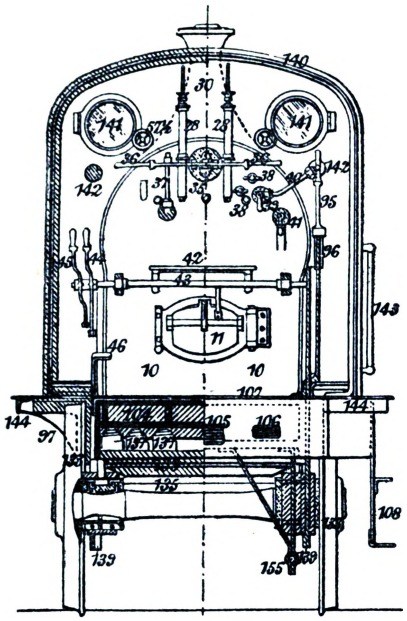

BACK ELEVATION — PART IN SECTION

5169.

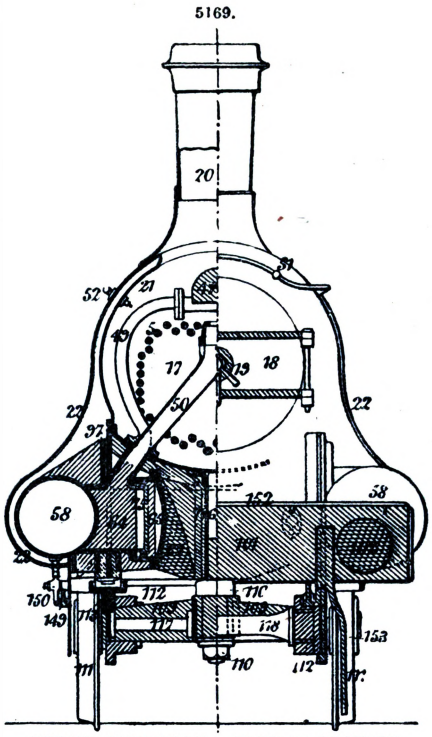

FRONT ELEVATION — PART IN SECTION.

For the fire-box, Fig. 5176;—

26. Safety-valve seat.
27. Lever of safety-valve.
28. Spring, and spring case, for safety-valve.
29. Safety-valve.
30. Casing for safety-valve.
31. Steam-whistle.
32. Handle for steam-whistle.
33. Regulator-tube, Fig. 5177.
34. Regulator-rod.
35. Stuffing box, and gland of regulator.
36. Levers of regulator.
37. Water-gauge, glass, and cocks, Fig. 5168.
38. Steam-cocks.
39. Steam-cock in connection with
40. Steam-pipe for the admission of steam into one of the hollow hand-rails, an arrangement by means of which steam is injected into the funnel of the smoke-box for the purpose of promoting or improving the draught through the fire-tube when the locomotive is standing still.
41. Water-discharging cock and tube.
42. Heat and fire protecting plate.

5170.

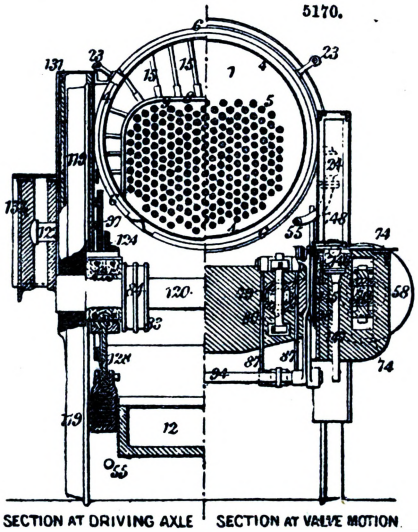

SECTION AT DRIVING AXLE SECTION AT VALVE MOTION

5171.

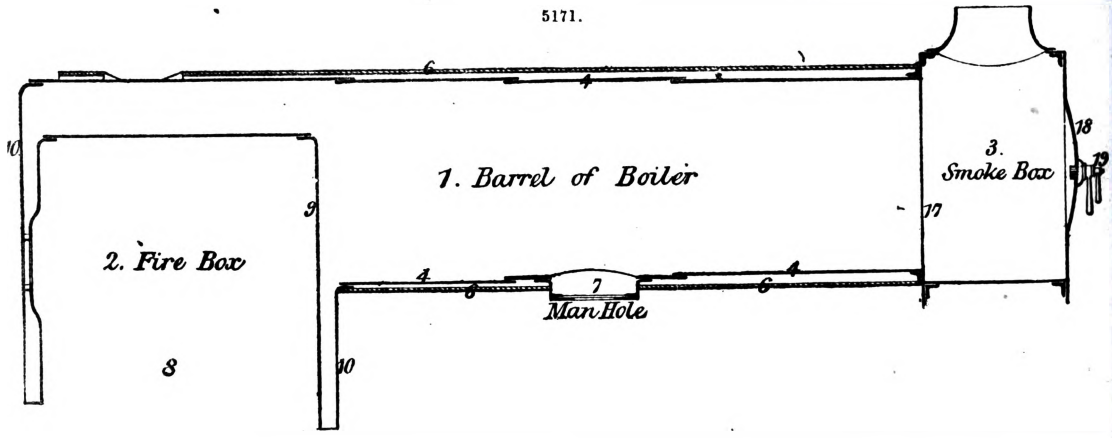

5172.

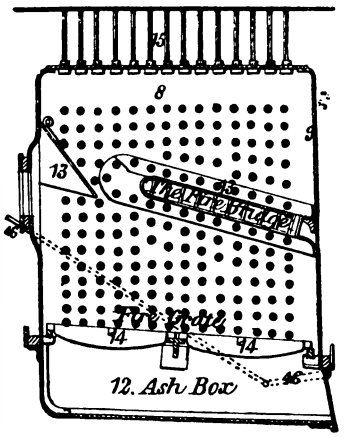

5174.

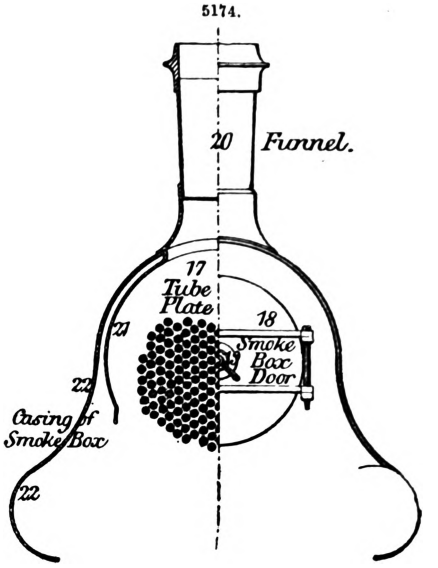

5173.

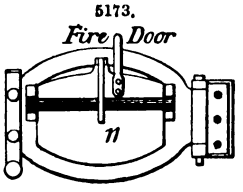

5175.

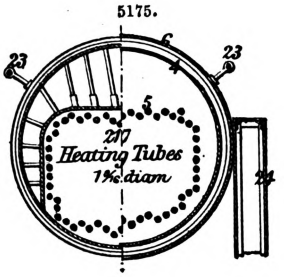

5176.

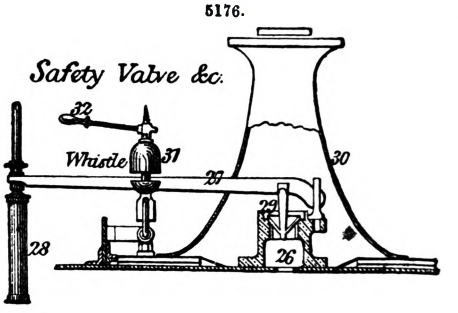

5177.

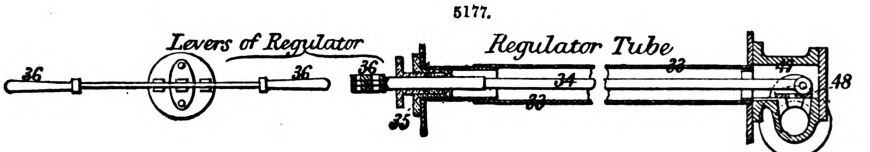

5183.

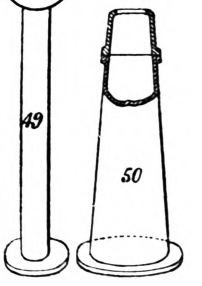

43. Common axle to—
44. Lever for opening the dry-sand box, and
45. Lever in connection with the cylinder-cocks.
46. Levers for opening ash-box.

For the smoke-box;—

47. Regulator-box.
48. Regulator-valve.
49. Steam admission pipe from regulator to cylinder.
50. Exhaust-pipe from cylinder, Fig. 5183.
51. Hand-rail.
52. Hollow hand-rail and pipe in connection with 39 and 40.

For the boiler in general;—

53. Injector, Fig. 5178.
54. Water-pipe from water-tank to injector, connected to
55. Water-pipe from injector to boiler.
56. Handle and screw for regulating the admission of water.
57. Handle and screw for regulating the admission of steam.

57½. Valves, with handles and screws, for admitting steam into the injector.

The engine proper consists of—

58. Steam-cylinder, Fig. 5179.
59. Bottom of steam-cylinder.
60. Top of steam-cylinder.
61. Stuffing box of steam-cylinder
62. Gland of steam-cylinder.
63. Admission-ports.
64. Exhaust-ports.
65. Steam-chest.
66. Valve-face.
67. Steam-chest cover.
68. Piston.
69. Piston-rod.
70. Cross-head.
71. Cross-head pin.
72. Piston-rod cotter.
73. Connecting rod, Fig. 5180.
74. Motion-bars.
75. Valve.
76. Valve-spindle.
77. Valve-rod.
78. Stuffing boxes for valve-spindle.
79. Guide-bracket for valve-rod.

5178.

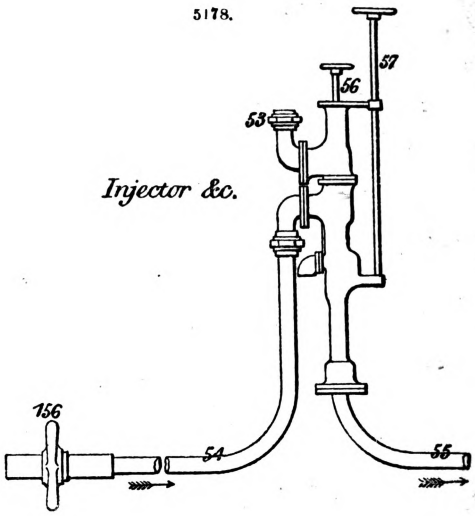

5179.

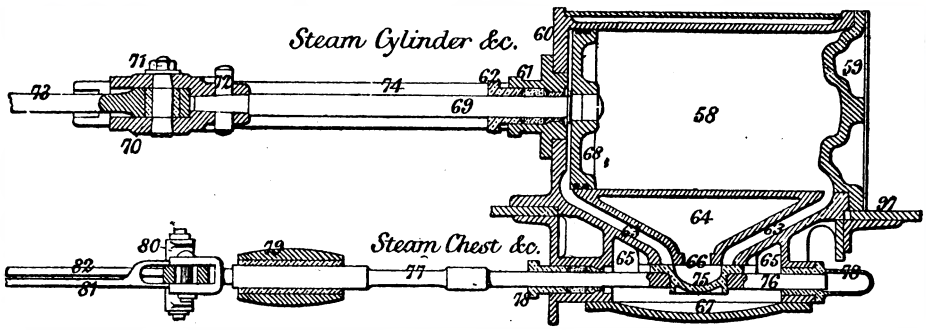

5180.

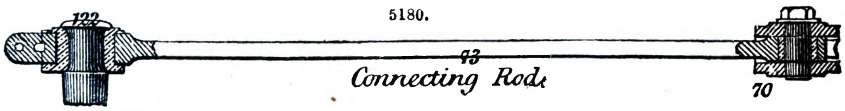

5181.

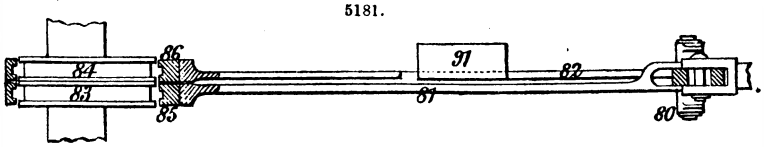

5182.

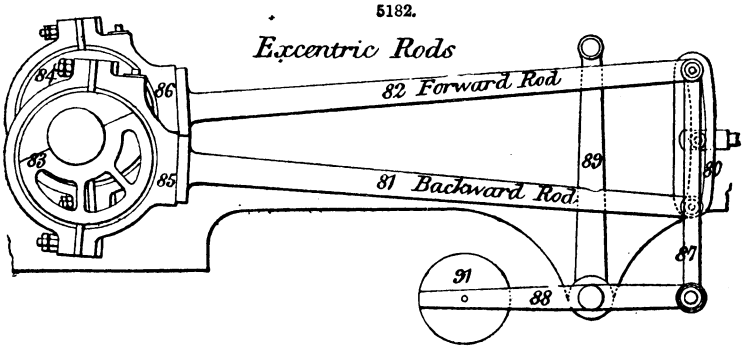

Figs. 5181, 5182—

80. Link.
81. Eccentric-rod for backward motion.
82. forward
83. Backward excenter.
84. Forward excenter.
85, 86. Eccentric-rings.
87. Suspension-lever.

88, 89. Rocking levers.
90. Reversing rod.
91. Counterweight for rocking lever.
92. Steam admission.
93. Steam exhaust.
94. Rocking shaft.
95. Reversing lever, with
96. Graduated arch for reversing lever.

Framework is formed of the frames—
97, 98. Longitudinal frame-plates.
99. Buffer-plate at trailing end.
100. „ „ leading end.
101. Buffer-beam.
102. Buffers.
103. Cross frame-plates.
104. Cast-iron block-plates for fastening draw-pin.
105. Draw-pin.
106. Places for safety-chains.
107. Foot-plates.
108. Foot-steps.

Bogie—
109. Bogie-frame.
110. Bogie-pin.
111. Wheels of bogie, or leading wheels of engine.
112. Bogie axle-boxes.
113. Guides of axle-boxes.
114. Bearing springs of bogie-wheels.
115. Spring harness.
116. Bogie pin-plates.
117. Cross-stays for bogie-pin.
118. Axles for bogie-wheels.

Driving wheel and axle, Figs. 5184 to 5186;—
119. Driving wheel.
120. Driving axle.
121. Crank, cast together with boss of driving wheel.
122. Crank-pin.
123. Bearings of driving axle.
124. Guide-blocks of bearings.
125. Adjusting block, or wedge of bearings.
126. Bearing spring of driving axle.
127. Shoe of bearing spring.
128. Spring harness.
129. Adjusting screw for wedge 125.
130. Horn-plates.
131. Driving-wheel cover.
132. Crank-pin cover.

Trailing wheels, Figs. 5187 to 5189;—
133. Trailing wheels.
134. Trailing axles.
135. Bearing for trailing axle.
136. Guide-plates for bearings.
137. Spiral springs for trailing end of engine.
138. Frame for carrying spiral springs.
139. Horn-plates for trailing axle.

The engine has in addition;—
140. Cover for protecting stand of driver.
141. Awnings or eye-glasses for drivers.
142. Hand-rail fastenings.
143. Upright hand-rail.
144. Angle-irons, and brackets for carrying foot-plates.
145 Rod for opening sand-box valve in connection with 44.
146. Sand-box valve.
147. Sand-box pipe.
148. Sand-box.
149. Rod and lever for opening cylinder-cocks in connection with 45.

5184. 5185.

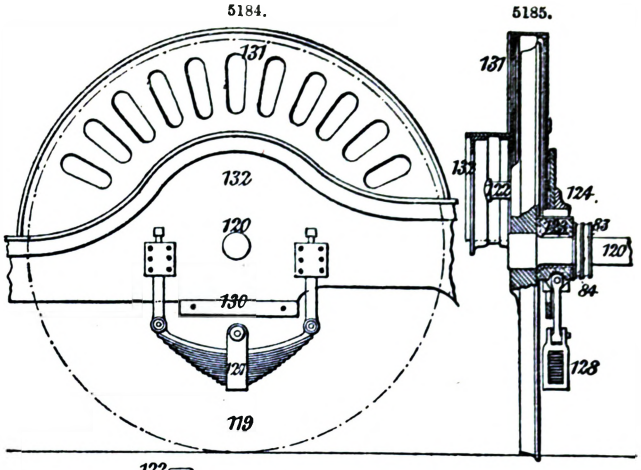

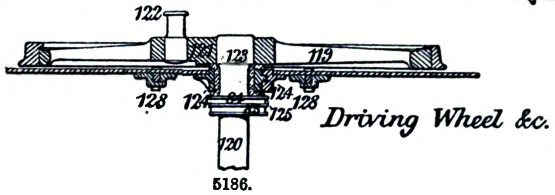

Driving Wheel &c.

5186.

5187. 5188.

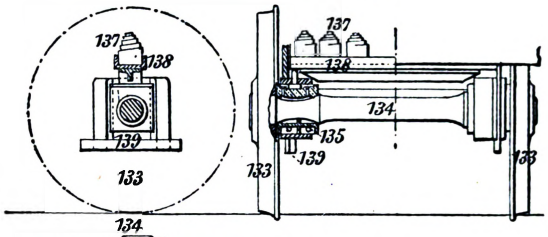

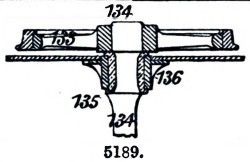

Trailing Wheels.

5189.

150. Cylinder-cocks.
151. Pin for coupling chain.
152. Plate on top of frame at bogie, or leading end of engine.
153. Guard-rails.
154. Covers for bogie or leading wheels of engine.
155. Hangers for carrying water-pipes.
156. Screw-joint for water-pipe.
157. Cover for protecting injector.

Figs. 5190 to 5193 are of the tender and its fittings;—
1. Longitudinal timber frames.
2. Cross timber frames or buffer-beams.
3. Upper water-tank.
4. Lower water-tank.
5. Filling hole.
6. Coal-bunker.
7. Buffers.
8. Buffer between engine and tender.
9. Draw-spring.
10. Shoe of draw-spring.
11. Draw-hook or link.
12. Safety-chain in connection with 106 of engine.

5190.

ELEVATION

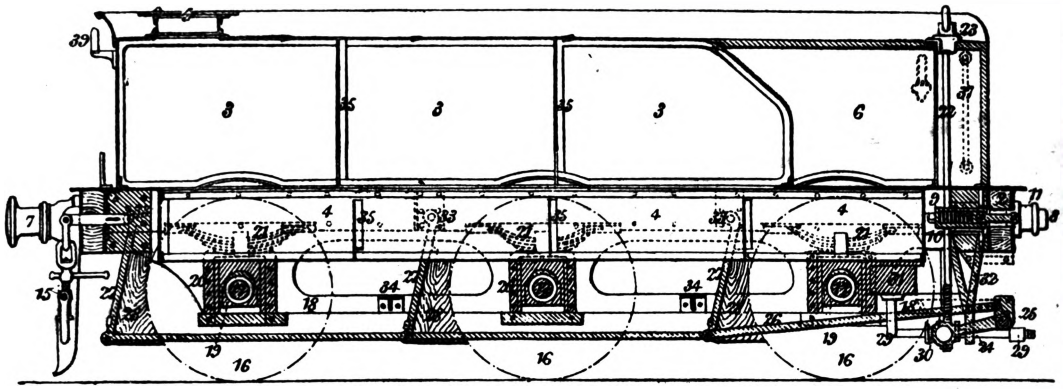

5191.

PLAN

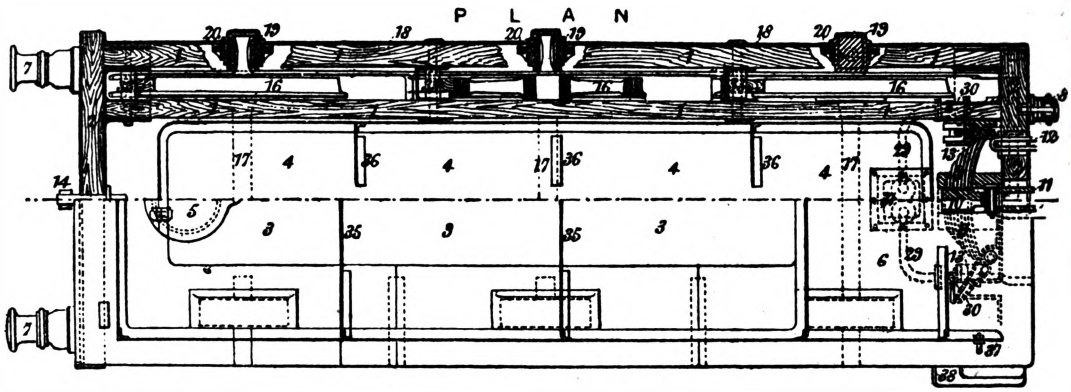

5192.

SECTIONS

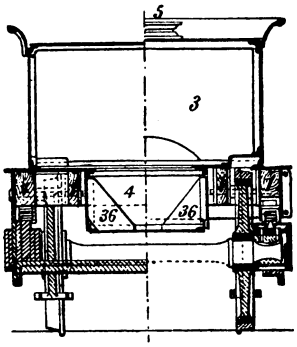

5193.

Bogie Frame &c.

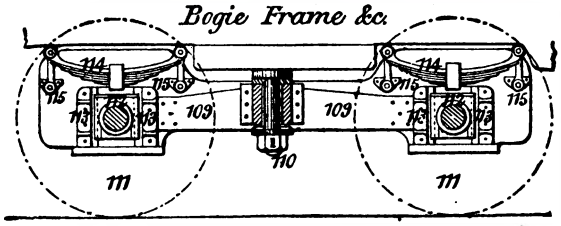

13. Links for draw-springs.
14. Draw-bar.
15. Coupling.
16. Wheels.
17. Axles.
18. Wrought-iron frame-plates.
19. Axle-boxes.
20. Guide-blocks.
21. Bearing springs.
22. Brake-spindle.
23. Bracket for brake-spindle.
24. Fork for brake-shaft.
25. Brake-shaft.
26. Brake-rods.
27. Brake-levers.
28. Brake-blocks.
29. Water-pipes.
30. Stop-valve in water-pipes.
31. Water supply box.
32. Brackets for carrying water-pipes.
33. Pins for brake-levers.
34. Cross-pieces between wrought-iron frame-plates.
35. Partition in water-tanks.
36. Upright brackets in water-tanks.
37. Upright hand-rail.
38. Foot-steps.
39. Lamp-iron.

One of the remarkable facts of the present time in connection with locomotive engines is the increasing tendency to resort to heavier and more powerful types. The greater dimensions of these engines, however, necessitate an increased number of axles, and hence we hear of locomo-

tives having four, six, eight, and even twelve coupled wheels. It is true that such engines are to be found chiefly in foreign countries whose natural peculiarities may in some measure justify their adoption, and that in this country such extreme dimensions are looked upon with disfavour. But though there is little probability of our adopting in its entirety the practice of other nations in this respect, there is a growing disposition to have recourse to engines supported upon more than three pairs of wheels for heavy work. In the following figures all marked dimensions are metric.

Engines with eight coupled wheels.—Fig. 5208 represents the ordinary type of goods engine employed by the French Northern Railway Company on their lines having large curves. The remarkable features of this engine are, its long barred fire-box, on Belpaire's system; the position of the trailing axle beneath the fire-box; the fixing of the brake upon the engine instead of upon the tender; and the placing of the mechanism on the outside. The frame-plates are between the wheels inside. The piston-rods, connecting rods, and other parts of the mechanism, are of cast steel. The eight axles are without a movable joint, but the end wheels have a little lateral play in the grease-boxes.

Fig. 5212 represents the class of goods engine in use upon the Russian railways, and may be taken as an illustration of the pure German type. The framing as well as the whole of the mechanism is outside the wheels. The cranks are upon the ends of the axles, and arranged according to Hall's system. The frame-plates consist of two cheeks of plate iron $\frac{3}{8}$ in. thick, having between them a strip of rolled iron $7\frac{1}{2}$ in. in depth and $1\frac{1}{8}$ in. thick. The chimney is of the form common in America for burning wood. Among other features worthy of notice may be mentioned the great length of the boiler, the slide-valve on Allen's system, the wooden floor of the platform, and the shelter provided for the driver, the levers of the safety-valves called Egenhoffen's, the counter-rod of the piston, and the special kind of Giffard's injector. The weight is distributed as follows;—Upon the leading axle 11 tons, upon the second 12 tons, upon the driving axle 13 tons, and upon the trailing axle 12 tons.

Fig. 5209 is a tank engine of the Great Northern Company, and may be taken as a representative of the class of eight-wheeled locomotives which English engineers have begun to adopt. The mechanism, as usual in this country, is inside; its main features are a large fire-box, supported in the middle by the trailing wheels and longitudinal tanks. Several of these engines have been constructed for India and Wales. In some of these latter a little play is allowed the end axles, to enable the engine to run smoothly over curves.

Engines with six coupled wheels.—Fig. 5211 is a specimen of this class by the Company of the Southern Railway of France. The boiler of this locomotive is of steel, 9 millimètres, or about 0·35 in., thick; it contains 4 cub. mètres, 880 gallons, of water, and 1980 litres, 70 cub. ft., of steam. The grease-boxes and the guide-supports are of bronze. The cylinders are outside, and the framing and the mechanism of the slide-valve, which is on Allen's system, are between the wheels. The great diameter of the latter is also a noteworthy feature. The leading wheels may be removed and replaced by others uncoupled, for the purpose of readily converting the engine into one suitable for lighter work. The weight of the engine is disposed as follows;—11 tons on the leading, 12 on the driving, and 11 on the trailing wheels.

Fig. 5194 represents a tank engine constructed at the well-known Creusot Works, and exhibited in 1867 at Paris. This engine is designed for heavy goods-traffic upon short branch lines with sharp gradients, and is worthy of remark as a specimen of its class, which has been largely supplied from these works to Russia, Italy, Spain, and Belgium. The whole of the mechanism is outside, reminding one of Engerth's system. The water-tanks are upon each side of the barrel of the boiler. It is said that this engine is capable of drawing a useful load of 700 tons upon a level way.

Engines with four coupled wheels.—This class of locomotive is by far the most important, and the distinctive features of its numerous varieties will require a more detailed enumeration than those to which we have already called attention. Fig. 5195 represents a locomotive of this kind constructed by Kitson, of Leeds, for one of the Indian lines. The mechanism, as usual, is inside, and the various parts are of wrought iron, with the exception of the piston-rod, which is of steel. The framing is double; the inner plates serve for the coupled wheels, and the outer for the pair of free wheels. The thickness of the inner plates is 1 in., that of the outer plates $\frac{1}{2}$ in. The journals of the coupled axles are 6 in. in diameter, and 9 in. in length, and rest in gun-metal bearings. The leading wheels have a lateral play of 1 in., and the journals have inclined bearings on Cortazzi's system. The suspension springs are calculated for a deflection of $\frac{1}{4}$ in. to the ton. Only those of the driving wheels may be regulated at pleasure. The weight is distributed as follows;—9 tons upon the leading wheels, and 19 equally divided upon the coupled wheels. The special appliances adapted to this engine are a smoke-consumer, consisting of a brick arch in the middle of the fire-box, and a deflector to make the air entering through the doorway pass under the arch; a Becker's anti-incrustator; Naylor's safety-valves; and a cylindrical spark-catcher placed in the smoke-box. The smoke and fire boxes are fixed with angle-iron to the barrel. The boiler is fed by two small Giffard's injectors fixed upon the footboard.

Fig. 5200 is an express locomotive of the Great Northern Railway, constructed by Fowler, of Leeds, according to Sturrock's plans. The coupled wheels are 7 ft. in diameter, upon which the weight is equally distributed. The leading wheels, and the six wheels of the tender, are 4 ft. in diameter. A distance of 17 ft. 9 in. separates the two extreme axles. The cylinders are 16 in., and the stroke is 24 in. There are 1000 ft. of heating surface, 112 ft. of which is contained in the fire-box; this latter has 19 ft. of grating. This engine is said to be capable of drawing twenty carriages over a line where the gradients are light at a speed of 60 miles an hour.

Fig. 5216 represents an engine by Borsig, of Berlin. It is a passenger engine, and possesses all the German features of framing and mechanism outside, and cranks upon the ends of the axles. An elegant box with sliding windows shelters the driver and fireman from the weather. The several parts of the mechanism are of cast steel, and of very small dimensions, according to Borsig's

custom. The weight upon the wheels is distributed as follows;—Upon the leading wheels 12·25, upon the middle wheels 11·75, and upon the trailing wheels 11·25 tons. The springs are 3 ft. 3 in. broad, and are composed in front of 9 plates, and behind of 12 plates, $\frac{7}{16}$ in. thick. The boiler is

5194.

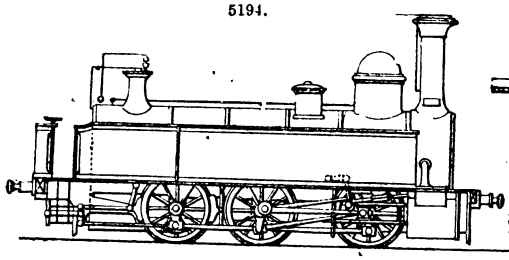

5195.

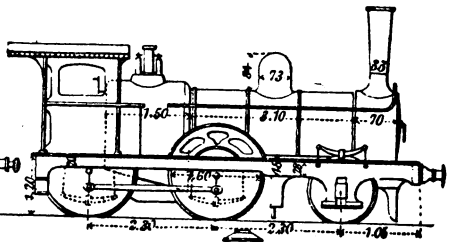

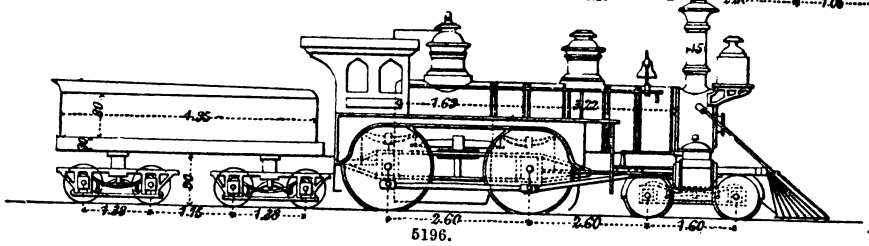

5196.

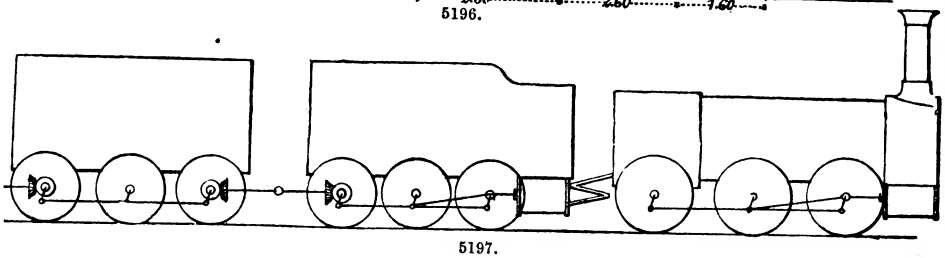

5197.

5198.

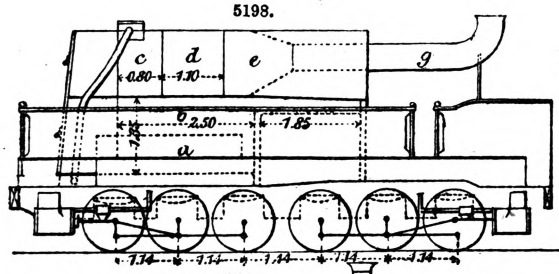

5199.

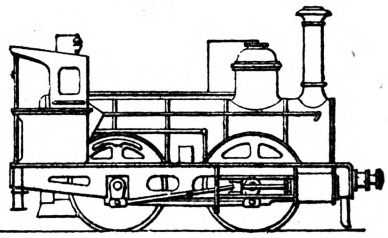

5200.

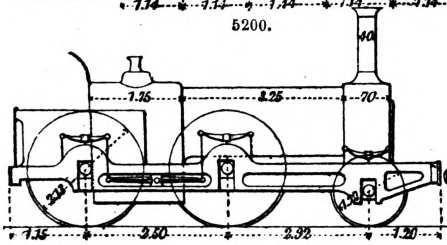

5201.

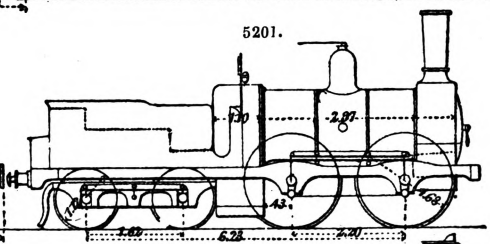

5202.

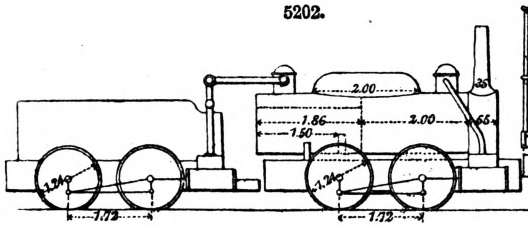

5203.

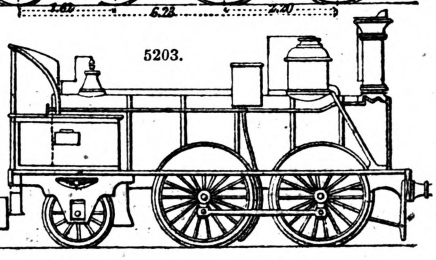

of plate iron $\frac{7}{16}$ in. thick, and contains 715 gallons of water, and 65 cub. ft. of steam. There are two gratings one above the other, the upper being 2 ft. 4 in., and the lower 5 ft. 7 in. from the crown of the fire-box. The trailing axle is beneath the higher grating, so that it is nearly beneath the

middle of the fire-box. The tender accompanying the engine is a type of the German tenders. It is of very large dimensions, and mounted upon six wheels. The framing is $\frac{5}{16}$-in. plate, and very elaborate in design.

Fig. 5217, a Belgian express locomotive. The main features of this engine are a large fire-box on Belpaire's system, a double framing, and internal mechanism of the English type, with lateral guides. The boiler contains 660 gallons of water, and 122 cub. ft. of steam. The distribution of the weight is 9 tons upon the leading axle, and 24 tons, equally divided, upon the middle and trailing axles.

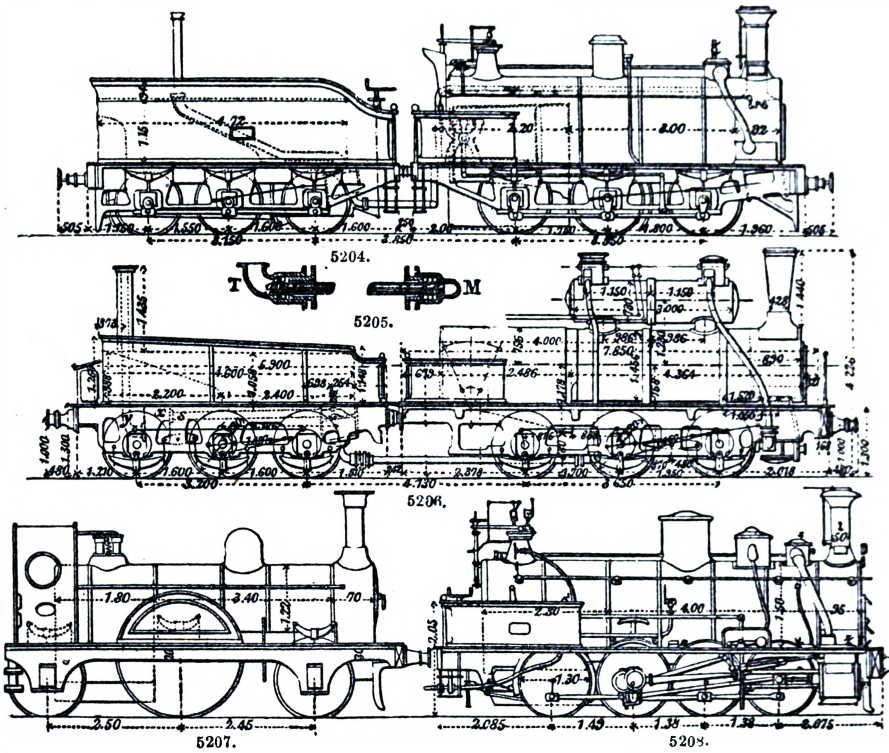

5204.

5205.

5206.

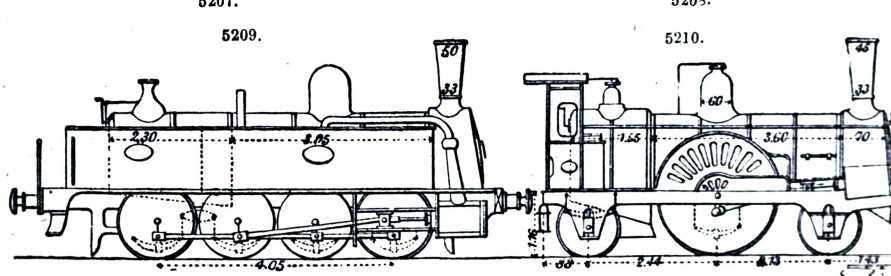

5207. 5208.

5209. 5210.

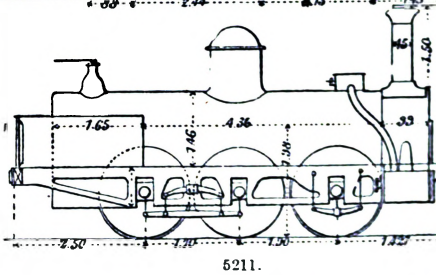

5211.

Fig. 5203 is a locomotive of the Lyons Railway, and is worthy of remark as the type of a class. It was originally constructed in 1851, but in 1867 it underwent considerable modifications, which have somewhat changed its character. An enumeration of the alterations effected will sufficiently explain the present nature of the engine. The tubular body or barrel was lengthened by 2 ft. 5 in., and consequently the fire-box placed farther back. The hind axle, with its supports, was changed, and the journals, which were originally inside, under the frame-plates, produced in a straight line, were brought to the outside, and the false outer framing added. The axle was also allowed a little play by means of Sharp's inclined planes. Kitson's system of changing the direction of the motion was adopted, and a Lechatellier steam-brake applied. Another noteworthy feature was the adoption of Thierry's system of consuming the smoke by an injection of steam, and introducing air through hollow stays. The boiler contains 660 gallons of water, and 52 cub. ft. of steam. The distribution of the weight is 19 tons, equally divided upon the leading and driving wheels, and 6½ tons upon the trailing wheels.

The Cudworth engine, shown in Fig. 5201, was designed for passenger traffic between Charing

Cross and Greenwich, on the South Eastern Railway, and constructed at the Canada Works, Birkenhead. The engine is in this case really distinct from the tender, but both are mounted upon the same double and rigid framing. The mechanism is internal, and of the ordinary English type, with lateral guides. The wheels are between two frame-plates, and the coupled wheels of the engine proper have oil-boxes both on the outside and the inside. The distance of the driving axle from the fire-box is 1 ft. 5 in.

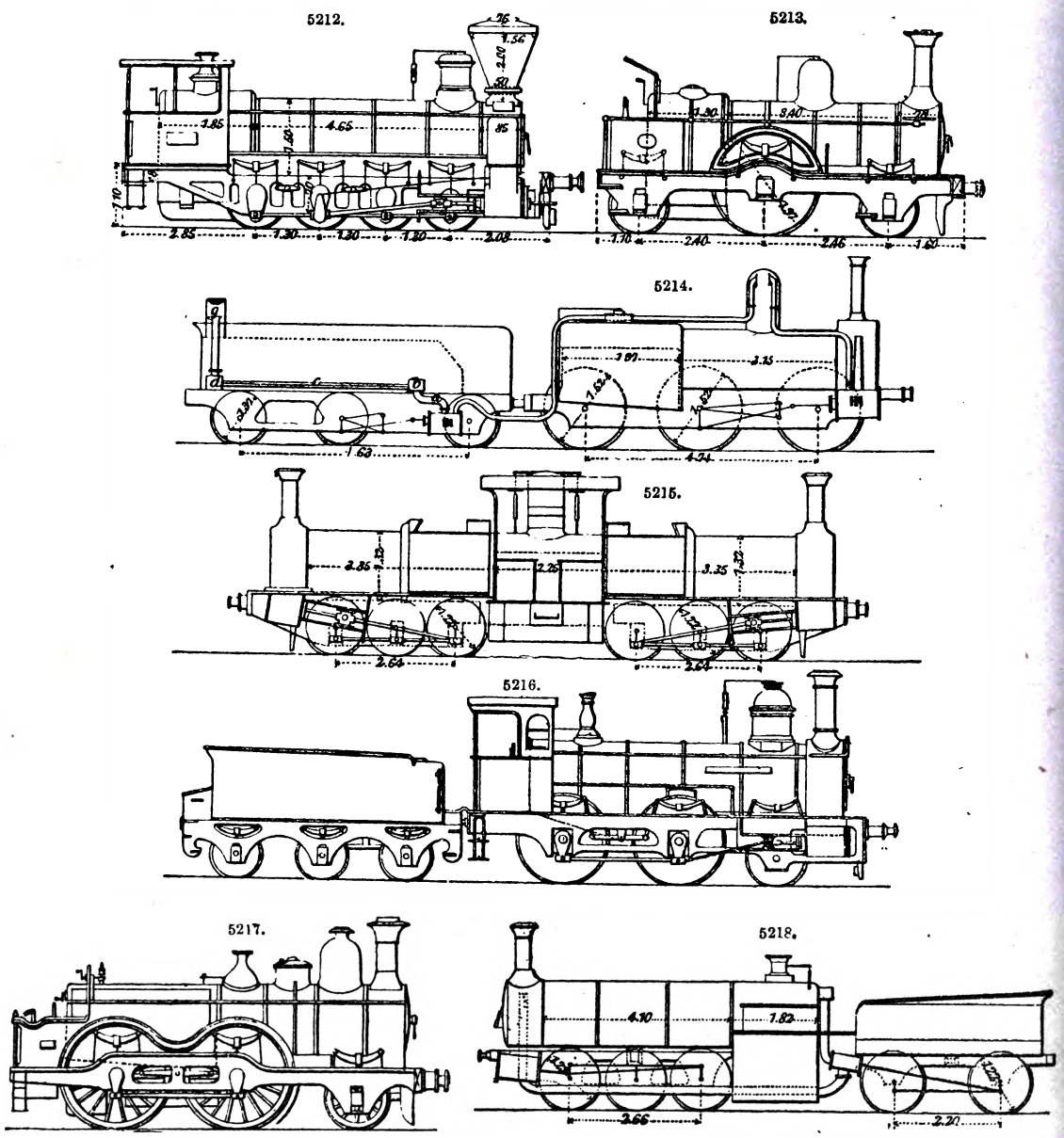

Fig. 5199 represents a passenger engine of the Baden Railway, which is marked by sharp gradients. This locomotive was built at the Graffenstaden Works, and may be taken as a specimen of the four-wheeled engines used in Germany. The cylinders are outside, and the mechanism of the distribution is between the wheels. The framing is also outside, as customary in Germany, and the frame-plates have ribs at the ends like a large I-iron. The following dimensions will be found interesting;—Volume of water in the boiler 3 cub. mètres = 660 gallons; pipes of the Giffard injector, $1\frac{1}{2}$ in. for the suction, and $1\frac{3}{4}$ in. for the forcing; steam-ports $14 \times 1\frac{1}{4}$ in., eduction $14 \times 2\frac{3}{4}$ in.; length of connecting rod, 7 ft. 11 in.; length of crank-pin $3\frac{3}{4}$ in., diameter $3\frac{1}{2}$ in.; diameter of axle in the middle $6\frac{5}{8}$ in., at the bearings $8\frac{3}{4}$ in.; length of journal, $5\frac{3}{4}$ in. The springs are 2 ft. $10\frac{1}{4}$ in. in length, and made up of 11 plates $3\frac{1}{2} \times \frac{7}{16}$ in. The weight of the engine, when in running condition, is equally distributed over the axles, each supporting nearly 13 tons.

Fig. 5196 is an American locomotive, by Grant, of Paterson, New Jersey. In form and construction this engine, which may be taken as a type of American locomotives, differs widely from those in use in Europe. It possesses a capacious fire-box and a powerful boiler, the plates of which

are $\frac{5}{16}$ in. thick. The fore part of the engine is supported upon a four-wheeled truck or *bogie*, and there are four coupled wheels. These wheels are of cast iron, with ties of Krupp's steel. The framing is inside, and very unlike anything of the kind now used in Europe, being similar to the framings constructed by Bury at the introduction of railways. The whole of the mechanism is outside, and similar in character to that of European locomotives. The boiler is fed by long and direct-stroke pumps, and not by Giffard's injectors. About 7½ tons of the weight is carried by the bogie, and about 20 tons equally divided by the coupled wheels. A large lamp is carried on the fore part of the engine, and over the boiler a bell is hung, which is rung on approaching stations. The sand-box is of the form of a dome, similar and symmetrical to the steam-reservoir placed above the fire-box. The fore part of the engine is provided with a cow-catcher, as usual in America. The tender is of very large dimensions, and is carried upon eight wheels, grouped in two trucks or bogies. A good deal of decorative art is expended upon American locomotives. The one represented in the figure has the whole of its body or barrel covered with a coating of highly-polished German silver.

Engines with uncoupled wheels.—It is the opinion of many engineers that locomotives provided with a single pair of driving wheels, the adhesive power of which can rarely exceed 2 tons, must sooner or later disappear altogether from active service, by reason of the continual increase of the weight of trains. This fact appears certain, if we except fast trains, the weight of which can never, without great risk, exceed 100 tons. Even with this load the train is almost ungovernable at a speed of 50 miles an hour, if it is necessary to pull it up suddenly. The coupling of wheels of large diameter is also attended with several practical difficulties, and we think that the express locomotive proper, with its single pair of driving wheels, will continue to hold its ground, demanding only improvements in those arrangements which give it stability. As types of this kind of engine we have selected three recent examples, which, as they were exhibited at Paris in 1867, may be taken as among the best of their class.

Fig. 5213 is from Stephenson, of Newcastle, and was built for service in Egypt. There is no novelty in this engine; the design and dimensions are those of the locomotives of fifteen years ago, and did the framing and boiler not evince a recent construction, it might be taken as an example of an engine that had seen long service. This fact shows that little advance has been made during the last few years either in the design or the execution of this class of engine. The mechanism is internal, and of the pure English type, with double lateral guides, the whole constructed to work easily. The frame-plates are double, one outside, the other between the wheels, stays being inserted wherever possible. The driving wheels have on each side a double grease-box of bronze, and a double suspension spring; all the springs are capable of being regulated at pleasure. The barrel of the boiler is formed of three cylinders, held together by hoops on the outside, and rolled circularly, like certain kinds of tire for railway wheels. The construction, without longitudinal riveting, was rendered simple by the introduction of the rolling mill, a system that is carried out at Lowmoor. The rivets used in Stephenson's engine have hemispherical heads, and all the rivetings are double. The boiler is fed by long, direct-stroke pumps, on the old system, instead of Giffard's injectors. It contains 556 gallons of water, and 50 cub. ft. of steam, inclusive of the contents of the dome.

Fig. 5207 is one of the Lilleshall Company's locomotives specially designed for service in India. It is a very pretty specimen of its kind, and is another good illustration of the pure English type. The mechanism is internal, with double lateral guides for the cross-heads of the pistons, but the cylinders have a slight upward inclination. The framing is double; the inner plates carry the oil-boxes of the driving axle, the outer hold the end uncoupled wheels, as shown in the figure. The springs are all independent, and only those of the driving wheels are capable of being tightened at pleasure. The axles and the tires of the wheels are of steel. The slide-valve is of the straight form known as Allen's. The fire-box contains a brick arched roof, and an air deflector, to consume the smoke. The boiler is provided with self-acting lubrificators, and with safety-valves on Ramsbottom's system, and the general type of the engine is in accordance with that engineer's ideas. There is a complete plate-iron box over the foot-plate, to protect the driver.

Fig. 5210 is an express locomotive of the Great Eastern Railway, and was built at Creusot, in France, from J. Sinclair's designs. The framing is double, the outer plate carries the small end wheels, and the inner embraces the driving wheels. The cylinders are outside the wheels, and between the two frame-plates, and have an inclination of $\frac{1}{17}$. The tender accompanying this engine is supported upon six wheels; it contains 8½ tons of water and 2½ tons of coal, and its weight, when in running condition, is about 24 tons.

Four-cylinder Locomotives.—Though these engines differ from each other somewhat in design, they must all be regarded as essentially two distinct engines, supported upon two united but distinct framings, the latter, however, partaking more of the nature of an independent truck or bogie. The former of these, which contains the boiler, may be called the engine proper, and the latter the tender-engine. Each type differs from the others in the mode of communicating the steam, and in the special purpose to be effected. But in every case the addition of the mechanism to the tender is designed to furnish promptly an auxiliary motor, the use of which may be intermittent and occasional, as, for instance, to make up lost time, or to ascend a sharp gradient. To give a correct notion of the development of this kind of locomotive, we must describe the systems of Verpilleux, Cernuschi, Flachat, and Sturrock.

Fig. 5202 represents one of Verpilleux's engines which were in use upon sharp gradients some years ago. Verpilleux first introduced his engine in 1842. The two trucks rest each upon four coupled wheels, and the mechanism is external as in the small locomotives of that date. To increase the boiler power of the engine proper, a reservoir in the form of a half-cylindrical box was placed upon the barrel, which appliance was, however, found not to possess sufficient solidity, as the train stopped four times during the ascent of the gradient, as sufficient quantity of steam accumulated to keep up the speed of the engine. The steam was conducted from the boiler to the cylinders of the tender through pipes over the head of the driver. We do not remember how the

steam was discharged from the cylinders of the tender, but we think it was allowed to escape directly into the air through a single vertical tube. Verpilleux's locomotive had cast-iron wheels with wrought-iron tires. The framing was of wood. The form of the boiler was cylindrical, and it contained a fire-box of the same form.

Fig. 5197 represents a system suggested by Cernuschi which never got beyond the state of a project, though it made considerable stir in its day. Here again, as in Verpilleux's first plan, the steam is brought from the boiler into a couple of auxiliary cylinders in the tender. But besides this, Cernuschi wished to utilize the adhesion of the trucks or carriages of the whole train, if needful, by transmitting the motive power to them by means of gearing. Cernuschi's system is worthy of careful consideration. To convey the steam from the boiler to the cylinders of the tender, he employs a number of small tubes which, being arranged spirally, yield readily to inflection. The mechanism is external both upon the engine and the tender; the boiler is of great power, having a large number of tubes in a long barrel, the diameter of which is 4 ft. 11 in., and a very capacious fire-box supported in the middle by one of the pairs of wheels as in the most recent models of engines, a fact of this date, 1856, worthy of attention.

At about the same time Flachat proposed for the Alpine railway a locomotive in which, not only the tender, but several of the carriages of the train might occasionally be rendered motors, by the addition of cylinders supplied with steam from the very powerful boiler of the engine proper. The project was, however, never carried out.

Fig. 5214 represents Sturrock's engine. This eminent engineer of the Great Northern Railway took out a patent in France in 1864, reproducing his English patent, and several goods engines underwent alterations under his direction at the works at Doncaster. The tender in this case received a motion precisely similar to that of the engine, the exhaust being turned into a tubular condenser in the water-tank. The only essential change effected in the engine itself was the lengthening of the fire-box, and the addition of a special steam intake. The main features of this locomotive are;—The cylinders are inside, and the valve gear is also inside between the cylinders. The framings are fixed and double, one outside and the other inside, in accordance with Gooche's original plan, generally adopted by Sturrock. The tender has a single framing which is outside the wheels. The mechanism is internal, but horizontal. The whole is heavy as usual on the Great Northern Railway. The essential features of Sturrock's engine are, the conveyance of steam to the tender through a long pipe yielding readily to flection by reason of its length of upwards of 22 ft., and the steam exhaust, which is effected in a real tubular condenser placed in the water-tank. *a* is the conduit through which the steam is taken; *b* and *d*, two chambers, between which is a double row of condensing tubes, 15 in number. The uncondensed steam escapes into the air through the pipe upon the chamber *d*. The end of this pipe is provided with a cylindrical cover, of larger diameter than the pipe, and perforated on the top *g*, to prevent the water from being ejected with the steam and to cause it to fall back into the tank. The water produced by condensation in the tubes appears to have no other outlet. There are said to be a large number of these engines in use upon the Great Northern Railway, where they are employed to draw heavy trains up the gradients without any reduction of speed.

Fig. 5218, Fairlie's engine with steam-tender. This variety of locomotive is the counterpart of Sturrock's. It is characterized by a particular arrangement of the mechanism, the large barrel of the boiler and the grouping of the wheels on two bogies to enable the engine to get round sharp curves. For the same reason neither the boiler nor the water-tank of the tender is fixed to the framing in the usual way. These framings, with the mechanism they carry and the wheels, are arranged as bogies susceptible of lateral displacement on curves, and the boiler and the water-tank are mounted so as to give a little lateral play to the framing beneath. The other features of the Fairlie type are the long boiler tubes, 13 ft. 5 in.; a vertical water-space in the middle of the fire-box; outside cylinders slightly inclined, and inside valve mechanism; single framings, and suspension springs underneath the axles. Steam is conveyed to the tender by a short kneed tube starting from the fore part of the fire-box. The exhaust is, as usual, turned into the chimney through a long pipe passing beneath the boiler, and yielding to inflection by reason of its length, like Sturrock's steam-pipe.

Fig. 5206 is an engine of the Great Central Railway of Belgium, built at the company's works at Louvain according to the designs of Maurice Urban, the chief engineer. This engine, which is called Verpilleux's in acknowledgment of the French invention, is capable of drawing trains of 245 tons weight, exclusive of the engine, at a speed of 12 miles an hour upon a line where the curves have a radius of only 1640 ft., and the gradients are from one in a hundred to one in sixty, over a distance of 17 miles. By reason of its powerful boiler, it is capable of working continuously with its four cylinders. The following are its principal features;—A long furnace on Belpaire's system with a roof fixed by means of stays instead of the usual armatures; an inclined grating with very small bars for the purpose of burning small coal; the fire-box rests upon the middle of the trailing axle, and like the furnace widens out forwards. The chimney is of the form of an inverted cone; a barrel nearly filled with tubes, and surmounted, as in Verpilleux's engine, with a cylindrical reservoir. The driving mechanism is inside, the framing single and outside the wheels. The springs are beneath the axles, with balance-rods from the leading to the driving wheels. The tender has six wheels and a framing similar to that of the engine. Steam is conveyed through a pipe passing beneath the boiler, and jointed at its two ends by the mechanism shown in Fig. 5205. On the side of the engine M, the pipe *o o* works with a steam-tight joint in a stuffing box, in three vulcanized india-rubber rings *a a a*. On the side of the tender T, the pipe is provided with a collar working between two similar rings *g g*. The exhaust steam from the cylinders of the tender is conveyed beneath the water-tank by two pipes *s s* into a common box *x*, from which a pipe *z* leads to the open air. The following dimensions are worthy of notice:—Inclined grating, 7 ft. 5 in. × 3 ft. 5 in. Volume of steam-reservoir, 45·5 cub. ft. Diameter of the journal of the driving axle, 10½ in. Distance of the cylinders apart, in the engine 2 ft. 2¾ in., in the tender

2 ft. 4½ in. Length of the connecting rods, in the engine 5 ft. 9¼ in., in the tender 3 ft. 11½ in. Diameter of piston-rod, 2⅛ in.

The Eastern Railway of France possess engines constructed at the Graffenstaden Works from designs furnished by their chief engineer Vuillemin, who has followed out Sturrock's system. Fig. 5204 represents one of these engines, which are intended for service upon certain sections of the line exceptionally distinguished by rising and falling gradients. The inside mechanism is arranged nearly in the same way as Sturrock's, with a single framing outside the wheels, and coupling cranks upon the ends of the axles. The wheels of the tender are a little smaller than those of the engine. The boiler is a very powerful one, with inclined grating, short tubes, and a large heating surface direct from the fire-box. The latter is supported near the middle by the trailing wheels, and is provided with two doors and a water-space descending freely from the roof. Steam is conveyed to the cylinders of the engine through a long, free, kneed pipe, as in Sturrock's system. But the exhaust is effected through a pipe communicating directly with the open air. The boiler is of steel plate, and the various pieces of the mechanism are of cast steel. One of these locomotives is capable, with the assistance of the tender, of easily dragging 575 tons gross at a speed of 16 miles an hour up a gradient of $\frac{1}{200}$, sometimes with curves. The distribution of the weight of the engine over the wheels is such as to give it remarkable stability.

If now we compare the seven preceding types, we shall find that, with a common principle, each differs in the arrangement of the mechanism.

1. Verpilleux, Cernuschi, and Fairlie have outside mechanism; Sturrock, Urban, and the Eastern Company prefer inside mechanism, but with a framing outside the wheels, and coupling cranks upon the ends of the axles.

2. With the exception of Verpilleux, who used only four wheels, with a fixed distance 5 ft. 7½ in. apart, all the other types have six wheels, excepting Fairlie's tender, which has only four wheels.

3. Sturrock and the Eastern Company have assigned to the tender wheels a little smaller than those of the engine.

4. In all the systems the capability of the boiler has been increased, with the exception of Urban's, with a view to furnish steam to the tender for short periods only. Verpilleux and Urban have enlarged the steam-space.

5. Each system has its own mode of conveying the steam to and from the cylinders. Sturrock has a long pipe, flexible of itself, and exhausts in a tubular condenser. Fairlie has a short kneed pipe, and exhausts in the chimney through a long pipe, like Sturrock's conveying pipe. The Eastern Company have borrowed Sturrock's pipe, but they exhaust directly into the open air without condensation. Urban has a pipe jointed with elastic rings in a stuffing box. Cernuschi effects communication between engine and tender by means of spirals.

The engines which we have described above are known as steam-tender engines; but there are others employed for heavy traffic, chiefly upon Continental lines, in which the four cylinders are placed in the engine itself. These locomotives are, of course, very large and very heavy. We shall confine ourselves to a description of two of these, one in use upon the Northern Railway of France, the other constructed by James Cross, of St. Helen's, from Fairlie's designs, for the Southern and Western Railway of Queensland. The following are the fundamental characteristics of the French four-cylinder locomotive, Fig. 5198;—Beneath a rigid framing there are twelve wheels arranged in two independent groups, each having its own driving mechanism. Upon the single and inside framing there is first the water-tank *a*, and above this the boiler *b*, the shallow but long and wide fire-box *c* of which extends laterally beyond the framing and the wheels. A superheater *d* is placed above the boiler, the tubes of which superheater are 2 ft. 7½ in. in length, 3 in. in outer diameter, and have 161 sq. ft. of surface. Then comes a second tubular chamber *e*, having the same number of tubes, of the same diameter, but 3 ft. 7 in. in length, and having 215 sq. ft. of surface. These are for the purpose of heating the feed-water, which is forced into the boiler by pumps. A small Giffard's injector is provided in addition to these pumps, to work while standing still. In consequence of the great height of the engine, the chimney has to be placed horizontally, as shown in the figure. Experiments have shown that with the steam-blast the chimney draws as well in this as in the vertical position. It will be remarked that the whole of the mechanism is outside, and that the two groups of wheels with their separate mechanism are quite independent of each other. The fore and after axles of each group are susceptible of a little end play to enable such a great length of coupled wheels to get round curves.

Fairlie's engine is represented in Fig. 5215. Its main features are a rectangular fire-box placed between two symmetrical barrels, having altogether a length of 37 ft. 8 in., including the smoke-boxes, which boxes are surmounted by a common chimney provided with a spark-catcher, wheels and driving mechanism forming two independent groups on each side of the fire-boxes. These groups, with their framing, form a kind of bogie, and pipes capable of side inflections for conveying steam to the cylinders, and from the cylinders to the chimney.

See Adhesion. Boilers. Brake. Details of Engines. Dynamometer Car.

Works on the Locomotive Engine;—Wood (N.), 'Practical Treatise on Railroads,' 8vo, 1838. Pambour (F. M. G. de), 'Treatise on Locomotive Engines,' 8vo, 1840. Tredgold (T.), 'On the Locomotive Engine,' 4to, 1850. Clark (D. K.), 'Railway Machinery,' 2 vols. folio, 1855. Clark and Colburn, 'Recent Practice in the Locomotive Engine,' folio, 1859. Flachat, Petit et Le Chatelier, 'Machines Locomotives,' 8vo, 1859–65. Clark (D. K.), 'Railway Locomotives,' 2 vols. folio, 1860. Schepp (C.), 'Die Haupttheile der Locomotiv—Dampfmaschinen,' rl. 8vo and 4to, Heidelberg, 1869. Waldegg (E. H. von), 'Handbuch für specielle Eisenbahn-Technic, 5 vols. rl. 8vo, Leipzig, 1870–71. Colburn (Z.), 'Locomotive Engineering,' 2 vols. folio, 1871. 'Life of Richard Trevithick, with an account of his Inventions,' by Francis Trevithick, 2 vols. 8vo, 1872. 'Pocket-Book of Useful Rules and Formulæ for Engineers,' G. L. Molesworth, 17th edition, 1873. Weissenborn (G.), 'American Locomotive Engineering and Railway Mechanism,' atlas, fol., New York, 1873.

LOOM. Fr., *Métier*; Ger., *Webestuhl*; Ital., *Telajo*; Span., *Telar*. See Weaving Machinery.

LUG. Fr., *Oreille, Tasseau;* Ger., *Krone, Angussform;* Ital., *Orrecchio;* Span., *Halare.*

A *lug* in machinery is any projecting piece to communicate motion; especially a short flange by or to which something is fastened. A projecting piece upon a founder's flask or mould is also called a lug.

MACHINE. Fr., *Machine;* Ger., *Maschine;* Ital., *Macchina;* Span., *Máquina.*

In general any body or assemblage of bodies used to transmit and modify force and motion, as a lever or a pulley, is a machine; but the word is applied specially to a construction more or less complete, consisting of a combination of moving parts or simple mechanical elements, as wheels or cams, with their supports and connecting framework, calculated to receive force and motion from a prime-mover or from another machine, and transmit, modify, and apply them to the production of some desired mechanical effect or work. The term machine is most commonly applied to such pieces of mechanism as are used in the industrial arts for mechanically shaping, dressing, and combining materials for various purposes, as in the manufacture of cloth, and so on.

When the effect is chemical or other than mechanical, the contrivance is usually denominated an apparatus, not a machine, as a bleaching apparatus.

Many large, powerful, or specially important pieces of mechanism are called engines, as a steam-engine, a fire-engine. Unfortunately, however, there is no well-settled distinction between the terms engine and machine among practical men.

MACHINE TOOLS.

Those machines used in the finishing and fitting of machinery, after the more important operations of either forging or casting the rough material have been effected, are collectively designated as machine tools.

The objects machine tools are designed to effect are the cutting or grinding away of surplus material so as to produce true dimensions; removing the excess that has to be left in casting or forging, in consequence of the expanded condition of the material, or for other reasons that prevent accuracy; and in certain cases spinning the material into shape by contact with plain revolving surfaces, each of these operations being essentially aided by the ease with which the material operated upon can be moved to, in, or from the machine.

Although machine tools form an essential portion of the equipment in any machine shop, the circumstances under which they have to be designed are so various as to prevent the adoption of but very few standard tools, and the complex nature of their action is indicated by the diversity shown in their construction.

In most examples of machine tools the relative motion of the tools and the work or material operated upon results from three component motions usually at right angles to each other, or of two out of those three; they are the cutting motion, the traversing or transverse feed-motion, and the advancing feed-motion, the first two taking place parallel to the face of the work, and the third in a direction normal to it. The cutting motion is the most rapid of the three, being that by which the tool acts on the face of the work, leaving a narrow strip or band from which a portion of the material has been pared or scraped away. In many instances the cutting portion is effected by a motion of the work, the tool remaining fixed, and such is particularly the case in turning and screw-cutting lathes, and in many planing machines. There are other operations in which the cut is made by a motion of the tool, such are drilling, boring, shaping, and slotting. The speed of cutting tools is limited by the heat produced by their action, and this heat must never be so great as to affect the temper of the steel. Hence it is less, the harder the material of the work. White cast iron is usually cut at a speed of about 5 ft. a minute, steel and grey cast iron 10 to 20 ft., wrought iron 18 to 25 ft., brass 50 to 100 ft., and wood from 3000 to 10,000 ft. a minute. The transverse feed-motion takes place parallel to the face of the work and at right angles to the cutting motion; it is that motion by which the tool is made to shift its position relatively to the work, so as to make a series of parallel cuts, side by side, leaving a series of parallel strips or bands, which compose a surface of any required extent. This motion is sometimes continuous and sometimes intermittent. The rate at which the traversing motion takes place in paring a continuous surface depends on the breadth of the cut, which in iron ranges from ·1 to ·01 in. In screw-cutting the traverse at each revolution is equal to the pitch of the screw. The advancing feed-motion is that by which, after a certain depth of material has been cut away from the face of the work, the tool is advanced to cut away an additional depth. This is very frequently an intermittent motion, and in turning and planing machines it is usually an adjustment made from time to time by hand. Its extent at each adjustment is equal to the depth of the cut, which in iron ranges from the smallest appreciable quantity up to ·5 in. in ordinary cases. The cutting action of the tools may be conveniently divided into cylindrical cutting for circular forms, cutting in right lines for planes, and irregular cutting where the forms have neither true curves nor right lines.

Lathes.—The leading principle of the lathe is the rotation of material in contact with cutting tools. The principal parts of a machine-lathe are shown in Figs. 5219, 5220, which are of a standard lathe by William Muir and Co. of Manchester. J is the driving pulley; *k*, fast head-stock; *l*, reversing gear; *m*, driver-chuck; *n*, mandrel; O, poppet-head; *q*, back-stay and stepblock.

a a are the standards, *b b* the lathe-bed made truly plane and horizontal; the top of the lathe-bed is cast with the flanges 1, 2, flange 1 projecting more than flange 2, so as to afford protection to the screw and adjustment gear. The recess between the brackets is just sufficient to allow the clamp of the poppet-head or movable head-stock to pass; *c*, the saddle, the parts *d d* of which project to give it bearing and prevent rocking; *e*, top-slide movable on the saddle for adjustment; *f*, the swivel or tool-slide; this can be turned to the angle necessary for the work, and for surfacing up to the full capacity of the lathe; it is fixed by means of two screw-bolts *g*; *h h*, the screw, gearing into a half nut and traversing the saddle; the nut is thrown into and out of gear by the handle *i*.

The screw is by some machinists placed in the body of the bed.

Fig. 5221 is a section of the releasing motion to the tool-slide, Fig. 5222 an end view of the head-stock showing the reversing motion, and Fig. 5223 the mandrel with steel bushes, cone, and

reversing gear for the lathe, Fig. 5219. *a* is an eccentric shaft carrying the back gear; by releasing the set screw *b*, and giving the shaft a half turn, the lathe is thrown into or out of gear.

5219.

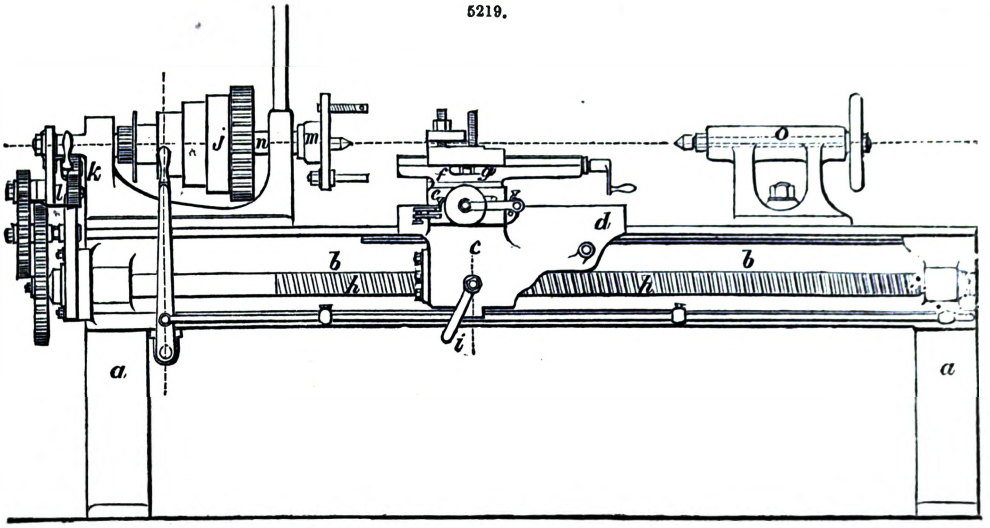

5220.

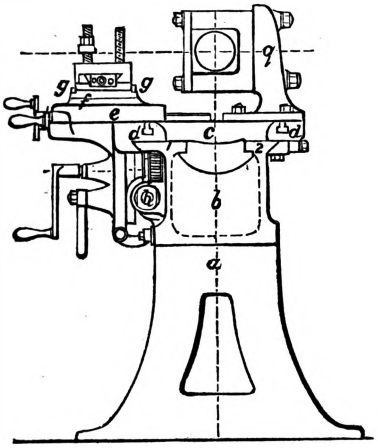

5221.

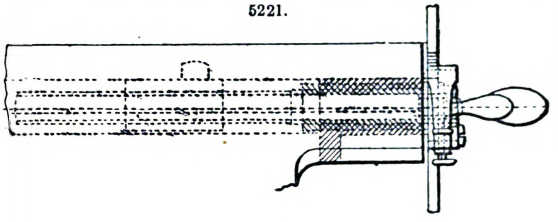

5222.

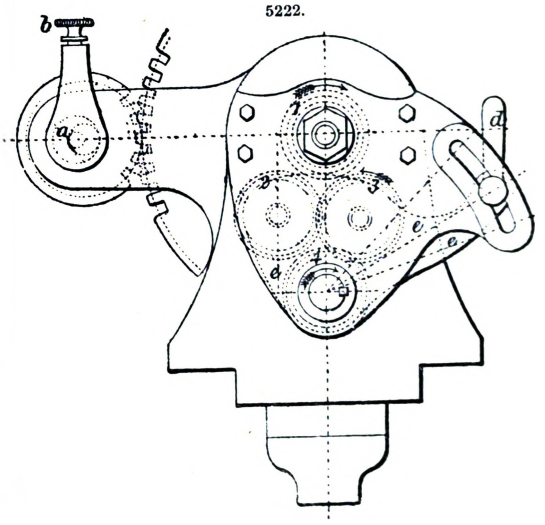

The pinion 1 is keyed on the end of the mandrel, pinion 4 on the tail-pin stud, 2 and 3 carrier-pinions running on studs attached to the carrier-plate *e e*, which is movable on the tumbler-plate *f*; *d*, the acting lever, by raising this the pinions 1, 3, and 4 will engage, and motion ensue in the direction of the arrows, but by lowering it pinions 1, 2, 3, and 4 will be in gear, and a reverse motion take place.

A good lathe should be capable of performing any work which can be placed within the centres; and therefore the gearing must be sufficiently powerful.

5223.

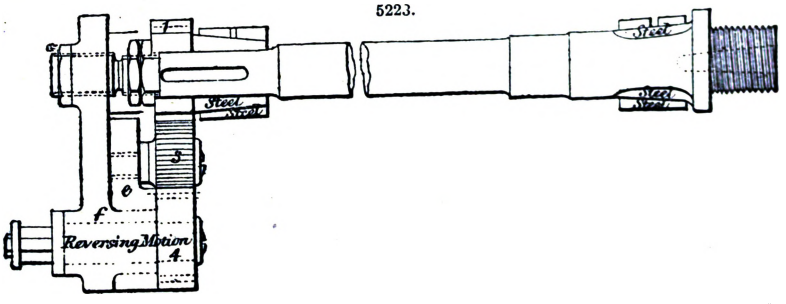

Fig. 5224 is a lathe for filing or polishing work, or for hand-tool turning, by the Putnam Machine Co. of Fitchburg, Massachusetts. The tail-stock or poppet-head *a* is fastened by a cam at the back of the frame by means of a handle seen at *e*. The rest *d* can be moved either longitudinally or transversely on the frame, and is secured by turning the handle in front, which not only clamps the saddle-piece *f*, but simultaneously fastens the socket-piece *g*. This socket-piece *g* is conveniently arranged to be set at any required angle. The spindle and general details are of the usual form, but the machine can either stand on a bench, as in Fig. 5224, or have legs to reach to the floor.

5224.

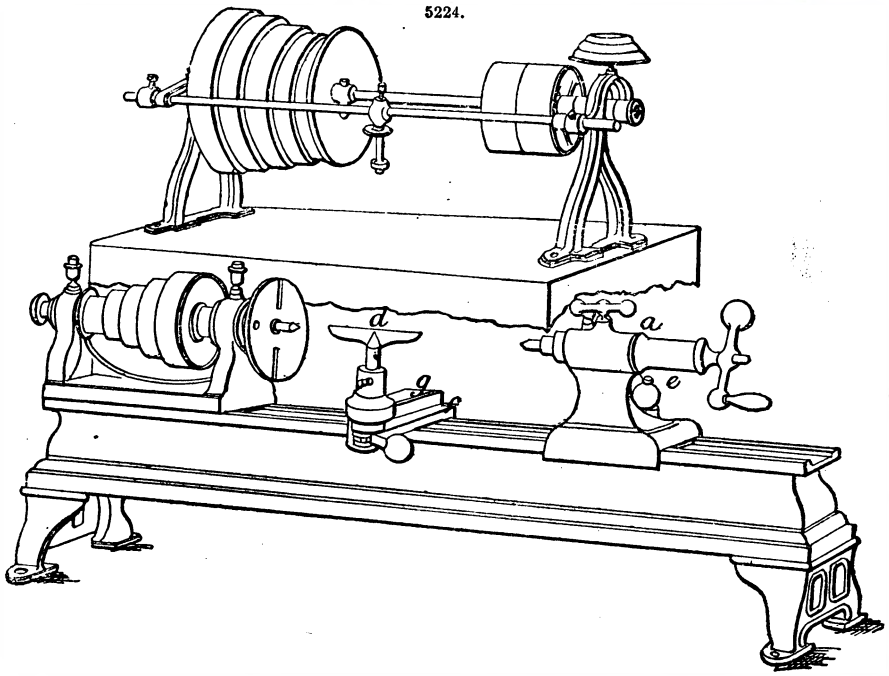

5225.

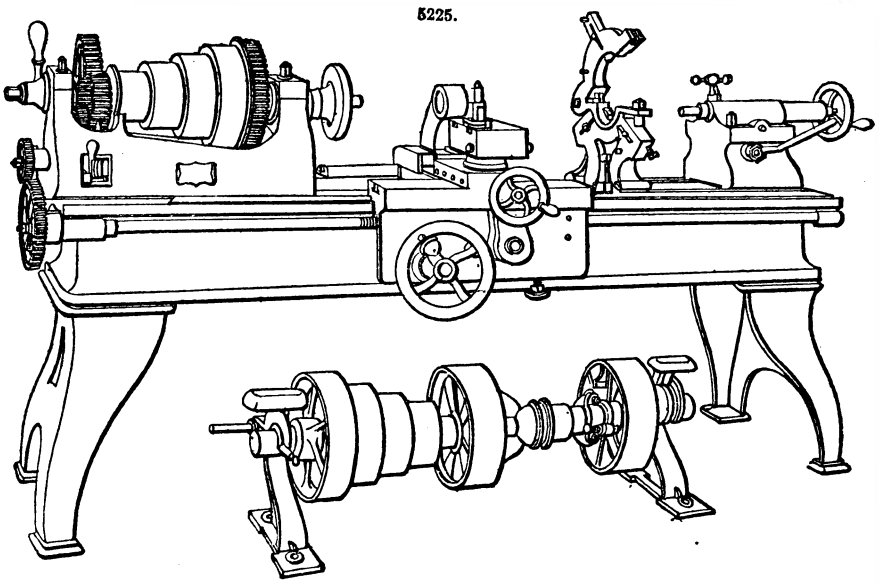

Fig. 5225 is an engine-lathe with screw and back gear, by the Pratt and Whitney Co., Hartford, Connecticut. This lathe swings 19 in. over bed, and 12 in. over carriage. The distance between centres is 6 ft., and bed 2 ft. 8 in. The boxes in the head-stock are of cast iron lined with Babbitt metal, and have excellent lubricating devices. The spindles are of steel, the front bearing of line spindle being $2\frac{1}{4}$ in. diameter by $4\frac{1}{4}$ in. long. The cone-pulley is turned outside and inside to balance, and carries a $2\frac{1}{2}$-in. belt, which is prevented from running into the gearing by guards upon the head. The foot-stock has a convenient cam fastening, and an improved dead spindle-clamp. There is an independent worm and friction feed driven by gearing that can be thrown out instantly to allow the spindle to run free. The small reversing gears are of wrought

iron; from 2 to 32 threads to the inch can be cut with the usual set of gears. All nuts, screws, and wrenches are case-hardened. The carriage is heavy, and has long bearings carefully fitted to the slides by scraping; it is jibbed its whole length to outside of the bed, and has an elevating tool-rest and automatic cross-feed.

The lathe-spindle of a machine-lathe can either be fitted with chucks of different sorts; being discs provided with holes, pins, and other means of holding the work, and causing it to rotate along with the lathe-spindle; or with a mandrel or cylindrical continuation of the spindle, on which wheels and pulleys, and other pieces of work having eyes in their centres, can be keyed for the purpose of being turned.

A chuck in the form of a large circular disc is called a face-plate. Some lathes have face-plates on both spindles; and then the two spindles are driven at the same speed, by means of two pinions on one shaft, gearing with teeth on the rims of the face-plates.

The greatest radius of the work which can be turned in a given lathe is limited by the height of the axis of rotation above the bed; and the lathe is described according to that height.

The tool-holder is adjusted so that the point or cutting part of the tool is exactly in a horizontal plane traversing the axis of rotation. The direction of rotation is such that the surface of the work moves downwards at the point of the tool, which accordingly cuts upwards.

The screws and nuts, or the pinions and racks, by which the traversing motions of the tool-holder are produced, are driven from the lathe-spindle through trains containing change-wheels; and by means of these the velocity-ratio and directional-relation of the cutting motion and of the traversing motion can be adjusted so as to produce the required resultant or aggregate relative motion.

When the word traversing is used without qualification, it generally means that the tool traverses in a direction parallel to the axis of the lathe, so as to turn a cylindrical surface. When the tool is made to move in the direction of a radius perpendicular to the axis, it turns a plane surface, and the process is called surfacing. This is very often the means used of making a plane approximately, previous to correcting it by scraping. By combining those two motions, so as to make the tool traverse in a straight line cutting the axis obliquely, a conical surface is turned. When the point of the tool is made to traverse in a circle, one diameter of which coincides with the axis, a spherical surface is turned.

All these operations are examples of circular turning in which the point of the tool describes, relatively to the work, a circle about the axis, if the traversing motion be neglected, or a helix or spiral of a pitch equal to the traverse a revolution, if this component of the motion be taken into account. In eccentric turning, the point is made to describe, relatively to the work, paths of various other kinds, such as eccentric circles, ellipses, epicycloids, and arbitrary curves of various sorts. Such aggregate paths are produced, sometimes by epicyclic trains carried by the chuck which holds the work, as in the eccentric chuck, elliptic chuck, and geometric chuck; sometimes by the action of cams or shaper-plates on the tool-holder. The operation of cutting screws is performed in a lathe; the work rotates, and the tool-holder is made to traverse longitudinally by means of the guide-screw. The nut by means of which the guide-screw drives the saddle is a clasp-nut, which can be thrown into or out of gear with the guide-screw when required. The guide-screw is made with great care and precision. An ordinary value of its pitch is half an inch. The velocity-ratio and directional-relation of the motions of the guide-screw and of the lathe-spindle are adjusted by means of change-wheels to the pitch and direction of the screw to be cut, according to the principle that, $\frac{\text{speed of rotation of guide-screw}}{\text{speed of rotation of lathe-spindle}} = \frac{\text{pitch of new screw}}{\text{pitch of guide-screw}}$; or the direction, right or left handed, of the new screw, is similar or contrary to that of the guide-screw, according as the directions of rotation of the guide-screw and of the lathe-spindle are similar or contrary.

Drilling and Boring Machines.—Drilling, as an operation in metal cutting, differs from any other, in the fact that the cutting edges support and guide themselves, during their action, and are not held by slides or spindles. The point of the drill, being in advance of the edges, forms an axis that holds and guides the lips or wings, and enables us to drill holes, almost anywhere in a piece, with only a revolving spindle having a feed movement.

Drilling, although it has many other objects, is mainly directed to connecting and joining together the parts of machinery, which constitutes a great share of what is termed fitting. We find drilling machines are needed in nearly the same proportion as lathes or planing machines, but their arrangement, although directed mainly to drilling parallel holes, at various places in the work, is more varied than that of other machines.

In ordinary practice they can be divided into column, or self-contained machines, radial, suspended, horizontal, and angular drilling machines. The essential parts are shown in the double geared drilling machine of Wm. Muir and Co., Manchester, Fig. 5226. They consist of a revolving spindle, with a forward feeding movement, and changes of speed to suit the various sizes of the holes to be drilled, and with a firm support for the material, having a vertical adjustment to and from the spindle, and a compound adjustment horizontally.

Fig. 5227 is of a well-designed 20-in. drilling machine, by Wm. B. Bement and Son, Philadelphia. The spindle is fed down by means of the tangent-wheel and worm at *a*, operated by the vertical shaft *b*. The worm is disengaged from the tangent-wheel by partially turning the rod *c*, which allows the spindle to be moved rapidly up or down by means of the handle *d*. The power-feed is engaged and disengaged by the clutch *e*, operated through the handle *f*, and a rod passing centrally through the shaft *b*. There are eight changes of speed, including the changes of the back-gearing, which is thrown in and out by the handle *g*. The cones are locked by a stop operated by the handle *h* passing through the shaft to the cones. The table *i*, and swing brackets *k*, are adjusted vertically by a screw set in a recess in the front of the main column, and turned by a handle fitting on to the shaft at *j*.

The driving gearing is encased in the main frame, at *m*, to prevent danger and decrease noise.

A powerful radial drilling machine, with self-contained driving apparatus, made by Wm. Muir

and Co., is shown in Fig. 5228. It consists of an upright frame, bolted to a strong base-plate, with a slide *s*, that can be raised or lowered. This slide has a radial arm *r* fixed on centres, projecting horizontally from a strong hollow standard, and carrying the tool or drill, which is driven by an arrangement known as a shifting train, in order that the position of the drill may be shifted to various parts of the work. Power is transmitted from the main driver to the driving apparatus *a*, and by a belt to the coned pulley *x*. Thence by a mitre-pinion at the end of the shaft, to which the coned pulley is attached, to the vertical shaft that drives the shifting train.

5226.

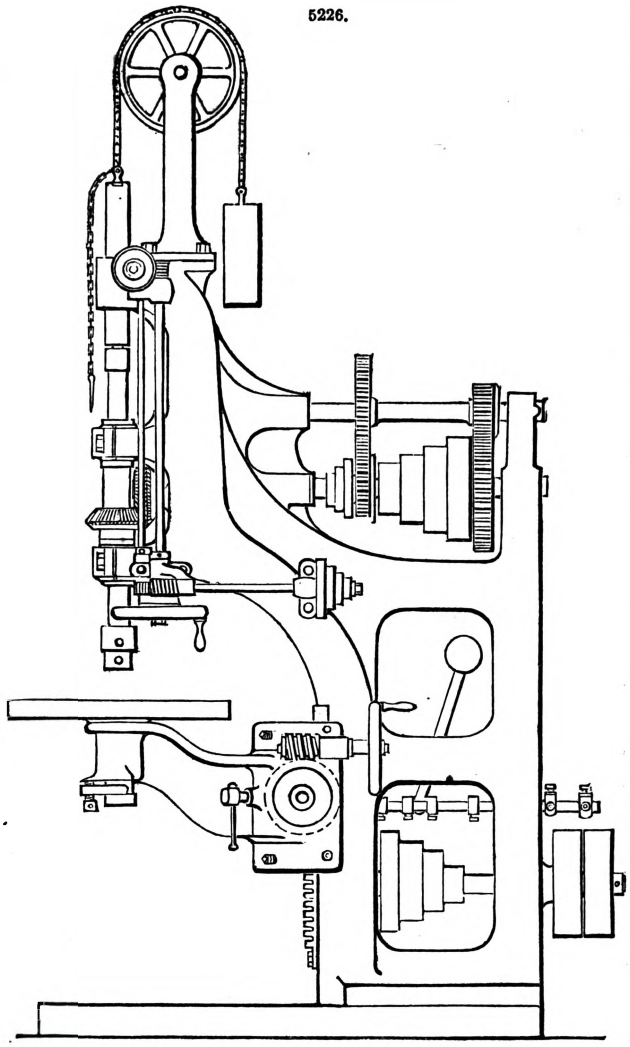

Fig. 5229 is of Sharp, Stewart, and Co.'s double traversing drilling machine.

The machine rests on stands, and has a bed on which two adjustable tables and two traversing drilling head-stocks are mounted, with their gearing, which receives motion from straps, by which the two head-stocks are driven independently of each other. The revolving motion of the cutting tools is communicated from shafts through ranges of toothed wheels, variations of speed to suit different sorts of work being obtained by cone-pulleys, driven from corresponding pulleys on shafts above.

The reciprocating and feed motions are communicated from the shafts by cone-pulleys and straps, thus the rate of traverse and feed can be adapted to various kinds of work. The range of reciprocation is governed by fixing the pins of two connecting rods in the required positions in slots formed on the upper surface of two elliptical toothed wheels, and the velocity of horizontal traverse of the head-stocks is rendered nearly uniform throughout the entire stroke by a combination of elliptical toothed wheels with eccentric toothed wheels, Fig. 5230; the eccentric wheel making two revolutions for one of the elliptical wheel.

5230.

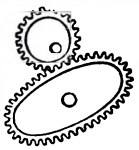

The feed-motion is transmitted from the elliptical wheels to the drill-spindle by ranges of gearing, including friction-plates. The downward feed of the tools is made at the end of the reciprocation, at which time the head-stocks are travelling at their minimum velocity.

To obtain great steadiness of the drills, the bosses in which the drill-spindles slide are made of considerable strength, and the drills are as short as the work will admit of; so that while drilling to any ordinary depth the ends of the spindles do not protrude far below the bottoms of their sockets, and nearly the same distance is preserved from the point of support to the cutting point during the entire process. Conical bearings, with tightening nuts, are adopted, so as to allow for wear and tear of the parts.

In order to ensure standard dimensions in the work corresponding to the dimensions of the tools, it is necessary for the centre lines of the cutters to be perfectly in line with the axes of the drill-spindles; and to effect this adjustment accurately, the sockets in the drill-spindles should be made conical, and screwed at the bottoms, the drills having corresponding screws and conical fitting parts; cotters also will answer the same purpose as screws to draw the drills tight up in their sockets.

The drills are not of the form generally used in other machines, but have their cutting parts at the circumference only. In order to preserve uninjured the standard dimensions of work, it is in practice found desirable to rough out the work previously to nearly the size intended, by drills, which may be sharpened from time to time when necessary during the progress of the work, and then to finish it by standard rose bits, which will last for a great number of pieces of work without any perceptible alteration in their dimensions.

If a cross traverse is required, it can be given by a self-acting motion applied to the transverse

slides on the tables holding the work, in which case the longitudinal traverse of the drill head-stocks would be suspended. If other than straight grooves are required, they may be obtained by combina-

5227.

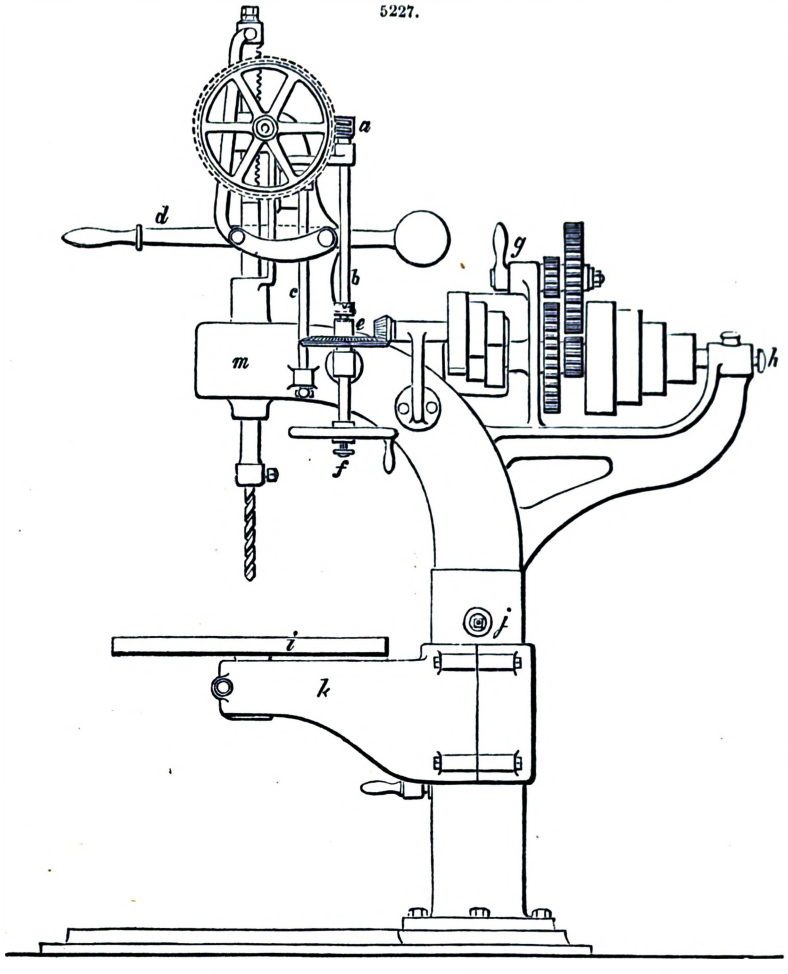

tions of the longitudinal traverse of the head-stocks and the cross traverse of the tables, both going on at the same time. If circular grooves, or portions of them, are required, they may be obtained by the use of self-acting revolving tables, in connection with the ordinary tables for holding the work.

The numerous purposes to which these machines may be applied will readily suggest themselves; for instance, one drill may be slotting or surfacing, and the other drilling plain holes; or both may be drilling plain holes, slotting or surfacing, as required. They have been used for such work as cutting cotter-holes in locomotive connecting rods—both ends at the same time, cotter-holes in connecting-rod straps, in pistons, piston-rods, and cross-heads; for cutting key grooves in shafts, for cutting oil-cups and joints of motion work out of the solid, and oil-ways in bearing brasses; and for various other similar purposes in connection with locomotive engine building and engineering tool-making.

The great advantage of these machines is perhaps best seen in the difficult and tedious operation of cutting slots and cotter-holes, and that when once started requires so little attention that an operative with an assistant can with ease look after two double machines.

It is important to observe further, that in contrast with most other workshop tools, no time is lost during the execution of a piece of work by this machine, but the work progresses without intermission from the commencement to the completion.

Boring is quite different from drilling, and might be called internal turning, the operation being almost identical. Boring is, however, the most difficult to do, for the action of the tools cannot be watched as in turning, being as a rule out of sight; the dimensions are more difficult to gauge, while cored or interior surfaces are both harder and more irregular than outside surfaces.

Lathes are the best boring machines for any work that can be fastened on the carriage. Machines with a fixed bed are extensively used, and answer well for ordinary purposes; but, as the character of the hole is dependent upon the bearings of the boring bar, and affected by its being sprung, or out of truth, the safest plan for accurate boring is to revolve the bar upon centres, and if possible without other supports.

In boring on machine frames this is inconvenient and unnecessary, but for piston-cylinders, cylindrical valves, seats, and such purposes, this plan of boring is best.

The tendency at this time is to cast machine frames in one piece, with cored sections. The

5228.

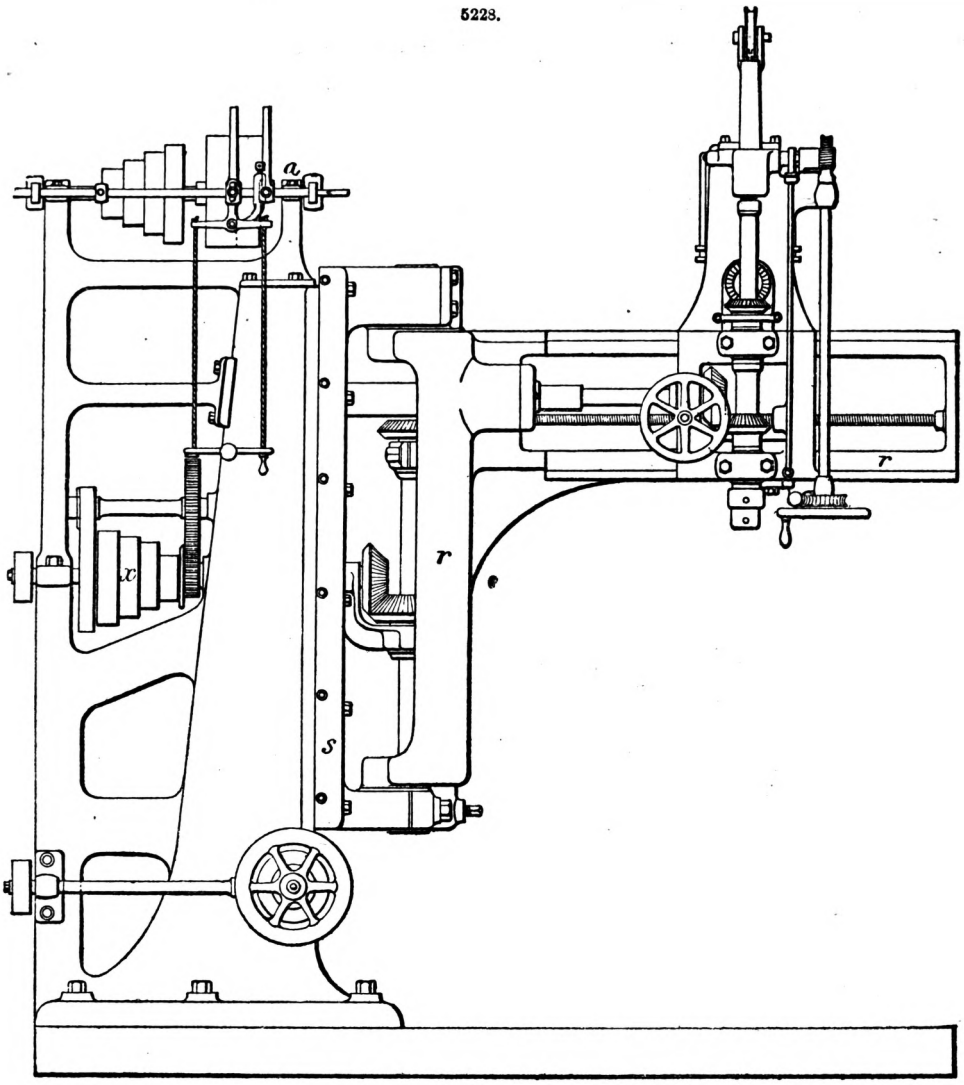

5229.

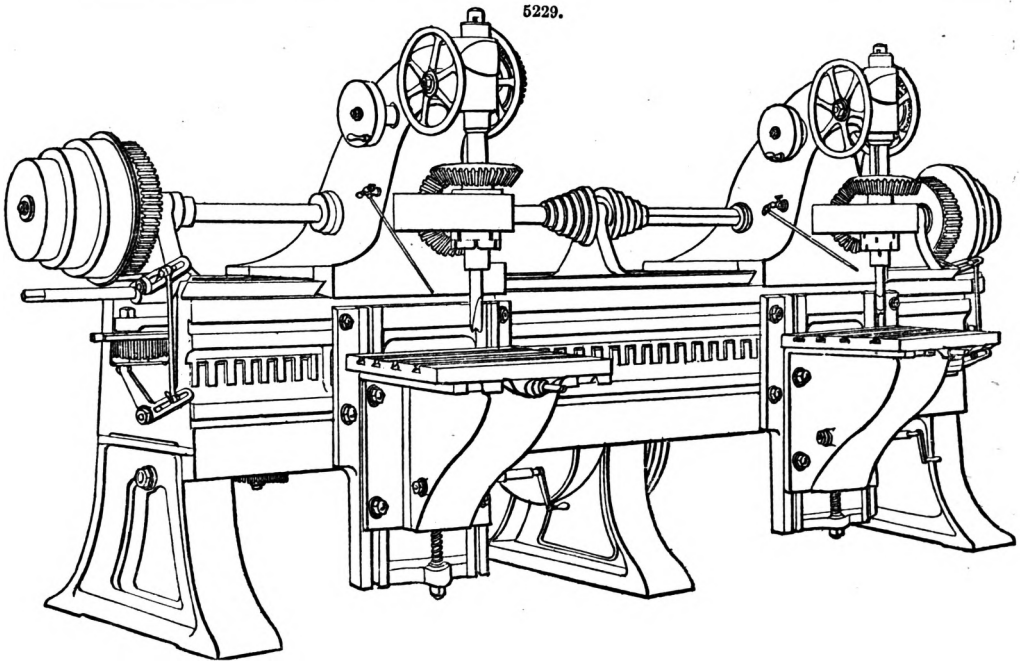

bearings for shafts have to be bored in various parts of the frame, and calls for the exercise of ingenuity and judgment on the part of the workman in the arrangement to support and drive boring bars. Experience has, however, demonstrated that it is better and cheaper to cast the bearings solid in the frames. A heavy solid plate placed under a strong suspended drilling spindle, and a bracket with level gear to change for horizontal boring, makes an outfit that will bore almost any hole about machine frames.

Planing Machines.—The term planing is or may be applied to all tools with rectilinear movement, for producing planes or other work performed in straight lines.

Shaping and slotting machines belong to the same class, and with the regular planing machine rank next to lathes in their use and importance, as implements in machine manufacture.

Machines for planing can be divided into two classes, those wherein the material is moved in combination with the cutting tools, and those that have only movement of the tools. In practice we find the rather anomalous arrangement of having the cutting movement with the tools for the lightest and for the heaviest classes of work, and the cutting movement given to the material for pieces of medium weight. There are advantages gained in either plan, the preponderance being for average work, in favour of moving the material on a platen beneath the tools.

Planing machines cut straight surfaces of all kinds; and are used especially for the cutting of plane surfaces to a certain degree of approximation; that is, the longitudinal straightness of the surface is perfect, but the transverse straightness is approximate.

The cutting action is effected by a longitudinal motion of the table carrying the work; the gearing which communicates that motion ought to be extremely smooth and accurate in its action; such as the rack and helical pinion; and the pitch-point of the rack and pinion ought to be as directly as possible below the cutting tool.

During the return stroke, the tool is lifted clear of the work, and the motion of the rack and pinion is reversed by means of self-acting reversing gear; and the train of wheelwork which produces the return stroke is so proportioned as to give an increased speed of motion to the table, usually about double that of the cutting stroke.

The transverse traversing motion of the tool-holder is intermittent, being made during the return stroke of the table. The combination which directly produces it is usually a transverse horizontal screw driving a nut that is fixed to the tool-holder. The screw is driven by a suitable train of wheelwork, the first wheel of which is driven by a click, usually of the reversible kind. The extent of traverse after each cutting stroke can be regulated by the help of adjustments of length of stroke, or of change-wheels.

For cutting straight surfaces of more or less complex cross-section, and especially for cutting straight grooves and straight rectangular holes, such as key-ways and slots, the slotting machine is used. In this machine the tool-holder or cutter-bar usually slides vertically in a guiding groove in the slide-head, which is carried by a strong overhanging frame. Below the slide-head is a table to which the work is secured, capable of being turned about a vertical axis, and traversed horizontally in two rectangular directions, so as to bring the work into any required position relatively to the cutting tool.

Fig. 5231 is an end elevation of a planing machine by William Muir and Co. of Manchester. The top has angular surfaces, forming a slide for the reception of the table, which is also cast in one piece, is very strong, and is perforated on the top with flanged slots for facilitating the fastening of the work to be planed. Underneath the bed is fitted a strong rack, gearing into a flanged pinion, on the shaft with which is keyed a spur-wheel, on the same shaft upon which is placed the driving pulley. This gives the quick return motion to the table.

There are uprights, bolted to the projections cast on the bed for their reception, the vertical faces of which are planed and squared for setting the work. Each is fitted with elevating screws and bevel-gearing, and coupled by the cross shaft, thus ensuring that the cross slide shall be always square with the top of the table. The cross slide is fitted with the feed-screws and feed-shaft, geared together at the ends. In this machine there are two saddles on the cross slide, each carrying a swivelling slide. Each of those slides carries a vertical slide, which can either be adjusted independently, or coupled together, for a self-acting downward or bevel cut; on the face of each vertical slide is bolted an angling plate, for clearing the tool of the work, and on this latter is hinged the tool-carrier, fitted with wrought-iron tool-holders and pinching screws.

Figs. 5232, 5233, and 5236 are of a planing machine, designed by Wm. Sellers, of Philadelphia, and made in England by Sharp, Stewart, and Co. Sellers has, in this machine, greatly simplified the construction of metal planing machines; he has provided a more thorough system of bracing for the bed between the uprights; imparted a smooth and uniform motion to the table upon which is placed the metal to be planed; placed the pulley-shaft so that its axis may be parallel with the line of motion of the table, thus enabling these machines to be placed parallel to lathes, and permitting a better arrangement of workshops; imparted a feed-motion to the cutting tool, by positive gearing and not by friction, thereby rendering its movement more certain; operated the feed-gearing from the driving gear of the machine and giving the cutting tool its feed either before it commences its cut or after it has finished the same, which cannot be done when the feed is operated from the table; and operated the belt-shifter in such a manner that the belt shall only be moved its own width, diminishing the wear upon it, and decreasing the width and weight of the driving pulleys.

Sellers furnishes the table of the machine with a rack of an ordinary construction, and operates this rack by a worm or screw, which enables the driving shaft to cross the bed diagonally, passing out in a position near enough to the upright, which carries the slide-rest and cutting tool, to enable the driving belts to be within reach of the operator.

The machine has a peculiar mode of transmitting and arresting motion by means of a ratchet which must be the driver, and a double pawl attached to the object to be driven, so that, while retained in gear with the ratchet, motion will be imparted to the object to be driven, until,

by the interposition of a suitable stop, the continuous motion of the ratchet will lift the pawl out of gear.

5231.

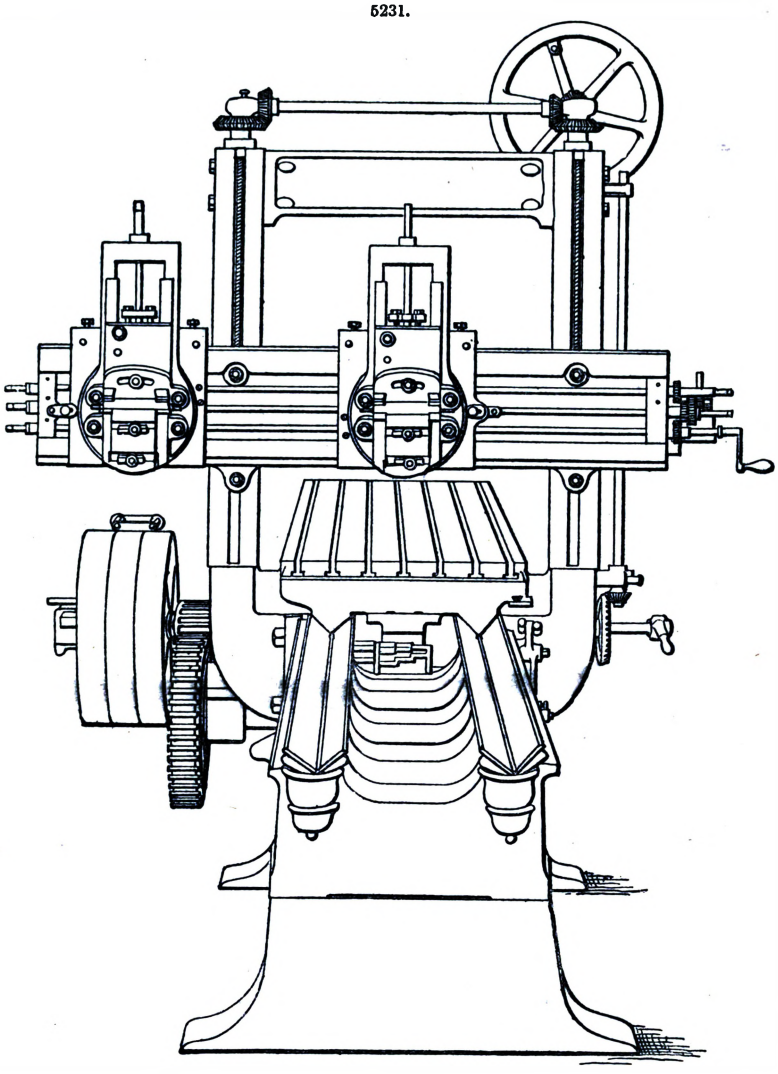

This pawl is provided with a suitable projection, having upon it a friction-pad which is always in contact with the driver, so that, when the motion of the driver is reversed, the friction-pad reverses the position of the pawl, and causes it to present its other end to the ratchet, which is thus enabled to move it in the opposite direction, until the pawl is again lifted out of gear by the interposition of a suitable stop as before.

A, Figs. 5232, 5236, is the bed of the machine, to opposite projections of which are bolted the uprights B and B′, carrying the slide C. The top of the bed A is provided with V-shaped grooves extending its entire length, in which slides the table D, it being provided with downward projecting ribs *a a*, of corresponding bevel to the V grooves. To the under side of the table and central between the slides *a a*, and extending its entire length, is attached the rack E. Motion is communicated to the table by means of a worm upon a shaft F, crossing the bed diagonally, in the manner best seen at Fig. 5232, which worm G gears with the rack E. The driving shaft F revolves in bearings *b* and *c*, cast in the bed and connected by a trough *d*, serving as a receptacle for the lubricating material in which the worm G is kept constantly running. The end of shaft F in the bearing *b* receives a portion of the thrust from the motion of the table, under the cut against a step H, whilst a portion of the lesser thrust, during the return motion of the table, is received against the hardened collars d^1 and d^2, at the other end of G, d^1 being fastened against the end of bearing *c* and d^2, attached to the shaft F; the remainder and smaller portion of this thrust is received against the sides of the bearings *b* and *c*. The shaft F is at the end opposite to the step H, supported in a third bearing attached to a stand I, and outside of this bearing it is fitted with a bevel-wheel J, which is driven from a pinion K on the pulley-shaft L, the latter having the usual fast pulley *f*, and loose pulleys *e* and *e′*, transmitting alternately by means of an open and crossed belt from the counter-shaft above the power for the reciprocating movement of the table. In Figs. 5234, 5235, it will be seen that the position of the teeth in the rack of the table slightly varies from a right angle to the line of motion; this is done to counterbalance the side pressure which would otherwise be produced upon the table by the action of the screw under the cut.

The advantages of the improvements as regards facilities for bracing the bed in the parts under strain from the cut will be obvious on reference to Fig. 5232. Here it will be seen that the sides

5232.

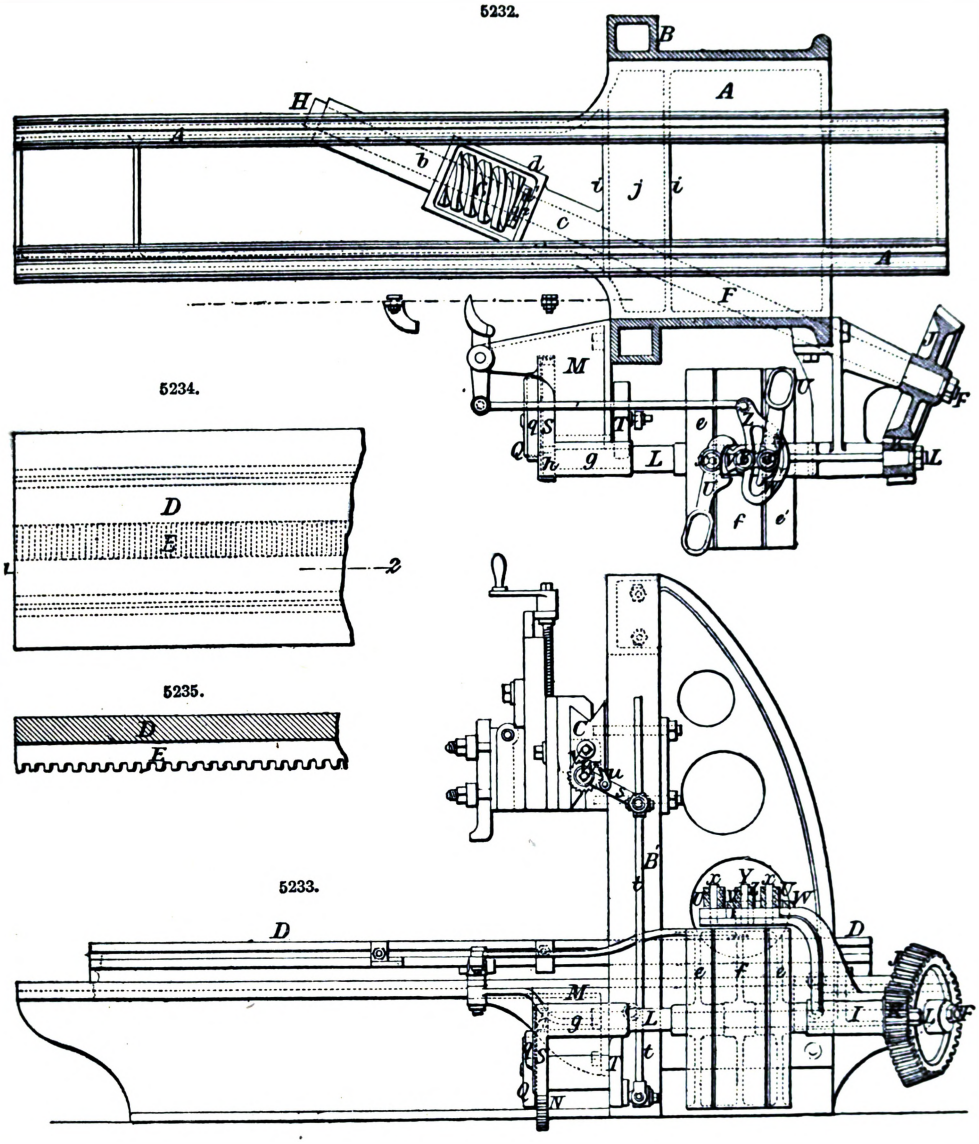

of the bed directly between the posts and the uprights B and B′ are firmly braced by a box-shaped connection consisting of the vertical ribs *i i*, and top and bottom plates *j* and *j*. To give the utmost capacity to the machine, it is very desirable to bring the driving belts within reach of the operator for convenience, and to accomplish this in the ordinary rack planer, the space between the uprights is usually occupied by the gearing, and admits of a very narrow brace, and in the screw planer this brace must be much diminished in height to give room for the screw, so that the strengthening of the most vital part of the machine is rendered very difficult. In addition to the above braces the bearings *b* and *c* of the shaft F, united by means of the trough *d*, connect the two sides of the bed in such a manner as effectually to strengthen it, and enable it to resist the end thrust of the shaft F.

The mode of transmitting and arresting motion by means of a ratchet and pawl is applied as a feed-motion for the cutting tool, the parts constituting this feed-gearing being carried upon a stand M, which is bolted to the front of the upright B′. The pulley-shaft L has one of its bearings *g* in this stand, outside of which bearing it is provided with a pinion *h*. This pinion gears into a spur-wheel N, which has a long sleeve journal N^1, Figs. 5237 to 5239, in the stand M, and is, upon its outer face, provided with an internal ratchet-wheel O. To the end of a shaft P, passing through the sleeve N^1, is attached, in front of the ratchet-wheel O, a circular plate Q; this plate carries the double pawl R, which has its point of support on a pin *k*, Fig. 5239, projecting from a block *l*, the latter being fitted to a corresponding recess in the plate Q, to which it is further secured by the rivets *m m*. The friction-pad *n* is attached to a flat arm *o* of the pawl R, and consists of a

piece of leather riveted or otherwise secured to the arm *o* on the side next to the face of the ratchet-wheel O, with which it is held in contact by the pressure of a spiral spring *p* confined in a recess in the block *l*. At the end next to the spur-wheel N the stand M is formed into a semicircular shield or cover S, Fig. 5240, protecting the wheel N and pinion H, and acting as a safeguard to the workman. A flange *q* projects on the front side of this cover, and embracing the circular piece Q serves at *r* and r^1 as a double stop for arresting the motion of the plate Q and its shaft P in either direction.

The motion given to the spur-wheel N by the pinion *h* alternately in opposite directions is transmitted to and arrested in the shaft P, the operation of the device to this end being as follows;—On reference to Fig. 5240 it will be seen that the pawl R is represented as resting with its arm O against the stop *r*, and in such a position in regard to the internal ratchet-wheel as to be out of gear with the teeth of the latter. Assuming now the ratchet-wheel to be rotated in the direction of the arrow, it will be evident that the friction produced by this motion upon the pad *n* of the pawl R, Fig. 5241, will change the position of the latter by drawing it around on its fulcrum in the direction indicated by a second arrow, Fig. 5240, thus throwing the pawl into gear with the first approaching tooth of the ratchet-wheel, and thereby transmitting the motion of the latter to the shaft P and plate Q, to which the pawl is attached.

In this manner the shaft P continues to be driven, until the pawl R approaching the stop r^1 is again shifted to its former position, and thrown out of gear by coming in contact with the said stop r^1, and immediately after the motion of shaft P is positively arrested by the block *l* coming in contact with the stop r^1, the ratchet-wheel *o* being free to continue its rotary motion. As soon, however, as the motion of the spur-wheel N is reversed, the friction of *o* upon the pad *n* throws the pawl R into gear, and the shaft P is moved in the opposite direction until arrested by the stop *r*, in the manner before described. The alternate movements of the shaft P in opposite directions are by means of a crank-wheel T which it carries, transmitted to a vertical rod *t*, which through a vibrating arm *s*, pawl *u*, and ratchet-wheel *v*, gives the requisite movements to a screw *w* in the slide C for feeding the cutting tool.

5236.

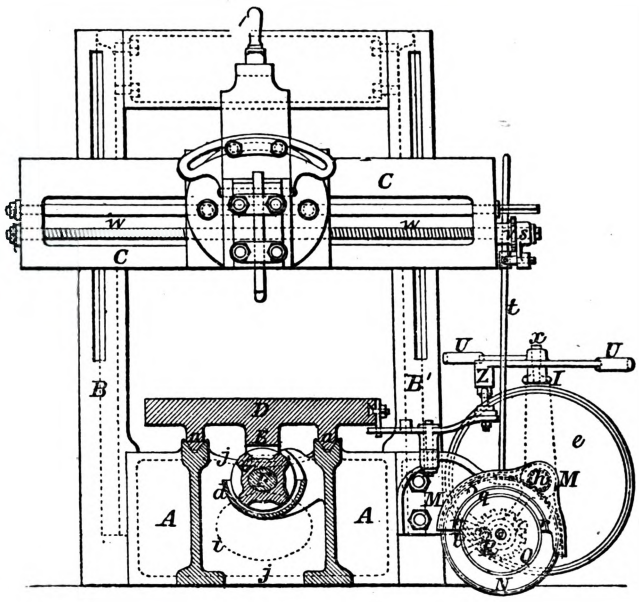

5239.

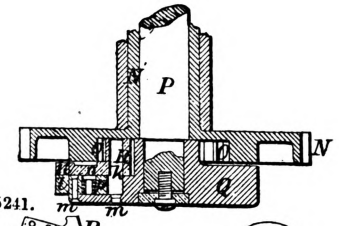

5241.

5237.

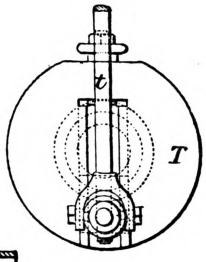

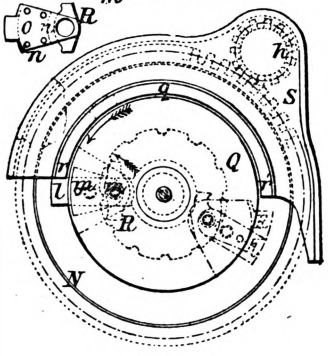

5240.

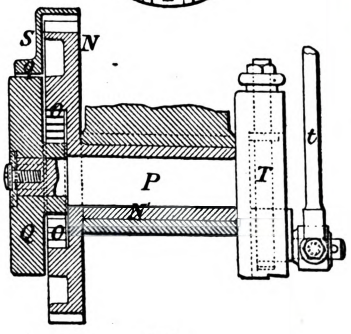

5238.

The device for controlling the position of the two belts which impart motion to the machine in opposite directions is shown in Fig. 5232, in which U U are the belt-shifters, supported by and movable around their respective centre studs *x x*. V is a tooth of an external, and W of an internal wheel, both being upon one piece Z, supported by and movable around the stud Y, the tooth V gearing with a corresponding space upon one belt-shifter, and the tooth W with the other. The segments upon Z are central between the extremities of their movement, and both shifters bearing upon their respective loose pulleys. Supposing now Z with its segments to be passing this position while moving in the direction of the arrow, Fig. 5232, it will be seen that the tooth W having just completed the movement of its shifters in passing out of gear with the same at the

instant that the tooth V goes into gear with its shifter, moving it until this tooth goes out of gear, when no further motion of the shifters can take place until the motion of the segments is reversed. If now the segments be moved in the opposite direction, the tooth V having passed out of gear with its shifter last, will be in a position, the motion being reversed, to go into gear first, and consequently the shifter which completed its movement last, will now complete its movement first, and the tooth V will pass out of gear with it as the tooth W goes into gear with its shifter. The advantages of this arrangement are, that the position of engaging teeth on the segment-wheel and shifters determines the difference in time between the movements of the two shifters; these may be varied, so as to allow the belt moving off the driving pulley to be entirely clear before the other goes on. It is evident also that when the segment-teeth V and W have passed out of gear, the belt-shifters U U are locked, so that no movement can take place until the segment-wheel is moved, thus making the position of the shifters perfectly secure.

The use of an internal and external wheel causes the driving and driven surfaces, when in action, to move away from each other, making the movement easy and without strain, which would not be the case if both segments were of the same character.

Shaping Machines.—Shaping machines that have a cutting movement of the tool, have come into general use for short work. The greater convenience of adjusting—the positive stroke, and the better facilities for chucking, or fastening the work, present strong arguments in their favour.

On planing machines the work must in all cases be fastened on the horizontal face of the platen, or to angle-plates bolted to its face, but shaping machines have generally both vertical and horizontal faces, to which the work can be fastened; besides being usually fitted with chucks and other appliances which cannot be so well used on planing machines. The positive stroke given by the crank is often convenient, and sometimes a necessity, in planing slots and grooves, when the tool must stop at a certain point.

The ingenious compound crank movement invented by Whitworth, generally known as the quick return movement, economizes time and gives to the shaping machine the advantages of the planing machine in this respect.

This motion not only saves time on the back stroke, but equalizes the movement in the forward or cutting stroke, an advantage of even more importance than the time saved. An effect about the same is attained by the slotted link, which is used by many English tool builders. Elliptical gearing is also used to effect the same purpose.

5242.

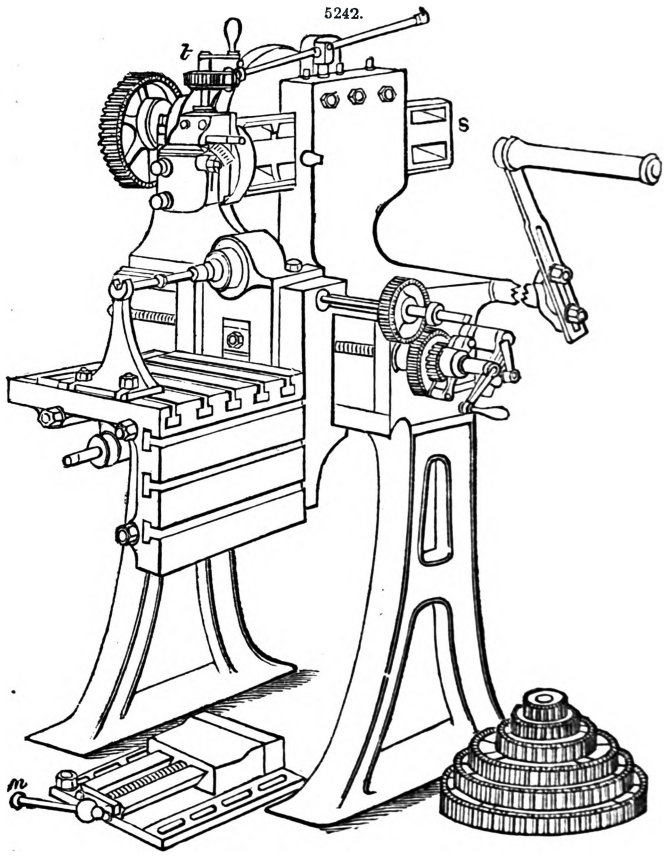

Figs. 5242, 5243, are views of 12-in. stroke shaping machines by Wm. Muir and Co., Manchester. *a* is the handle; *b*, the driving shaft; *c*, the driving pinion gearing into the change-wheels *c e*; *f f*, bearings upon the frame *g g'* carrying the shaft *h h*. Upon this shaft is cast a disc having a V slot *i*, within which is fixed a carrier stud adjustable with a V-shaped base not shown in the section. The stud works in a square slot, at right angles to the slide-bar, and it gives motion to the slide-bar; S is a slide-bar carrying the tool-head; *t*, adjusting screw of the tool-holder; *u*, the work table; *m*, Fig. 5242, a movable vice which can be attached to the table either on the top for light work, or at the side for long pieces of metal.

In Wm. B. Bement and Son's 14-in. travelling-head shaping machine, Figs. 5244, 5245, *a* is the main frame of the machine, along the tops of which the travelling head *b* moves; and the side is arranged for receiving the tables *c* and *d*, which have a lateral and vertical adjustment. The table *c* has a horizontal and vertical planed surface with T slots for clamping work. The table *d* is arranged with a vice for fixing work of plain form. The cutting bar *e* has a movement varying from zero to 14 in., and an adjustment of 10 in. The quick return movement is produced by Whitworth's eccentric arrangement at *f*.

The driving shaft runs the length of the machine and carries a splined pinion which gears the large wheel *g*, the pinion moving with the travelling head.

The crank for giving the feed is driven by a small pinion on the end of the driving shaft.

The feeding arrangement is shown on the end view, and consists of a screw connected by a long lock-nut to the travelling head, which is thrown in and out by a handle not seen in the drawing.

5243.

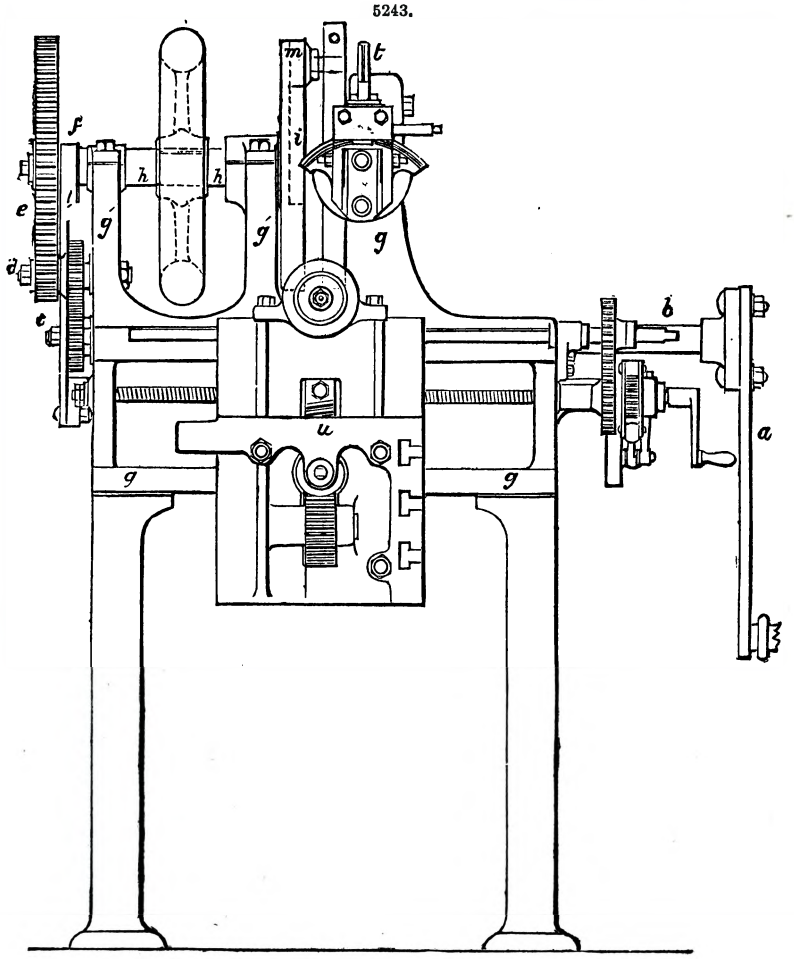

5244.

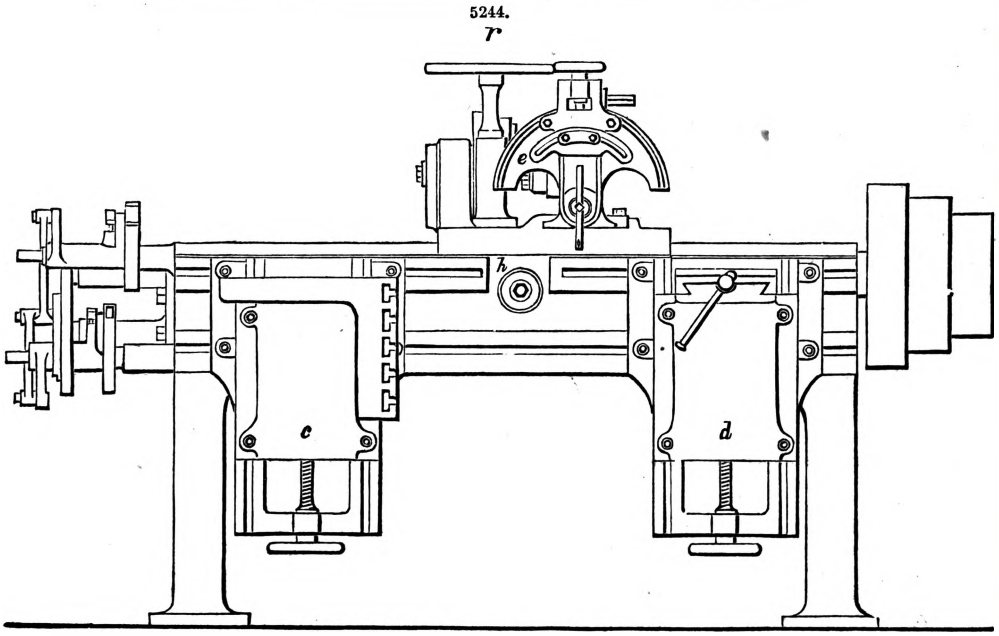

n is connected to the stud h by a worm and tangent-wheel, to give rotary feed, for shaping work which cannot be turned in the ordinary manner in a lathe.

The hand-wheel r gives a quick lateral adjustment to the travelling head by a rack and pinion.

The arrangement for holding and feeding the tool is of the ordinary form.

Fig. 5246 is of a similar shaping machine, by Wm. Muir and Co.

Fig. 5247 shows Sharp, Stewart, and Co.'s shaping machine.

This machine, in common with the generality of shaping machines having a stroke of more than 6 in., is composed of a bed to which are fixed one or more adjustable tables for carrying the work to be operated upon; on this bed slides a saddle which carries the tool-holder. Where the machine differs from the ordinary one is in the mode of giving the reciprocating motion to the ram carrying the cutting tool.

The main shaft, which is driven from overhead gearing, passes at the back of the machine, and has keyed to but sliding on it a pinion which drives a large wheel made with step-teeth. To reduce the irregularities, on the disc of this wheel is a slot in which can be adjusted a crank-pin, so as to vary at will the length of the stroke. On the crank-pin is a block fitting and sliding in a link, which link oscillates at the lower extremity on a

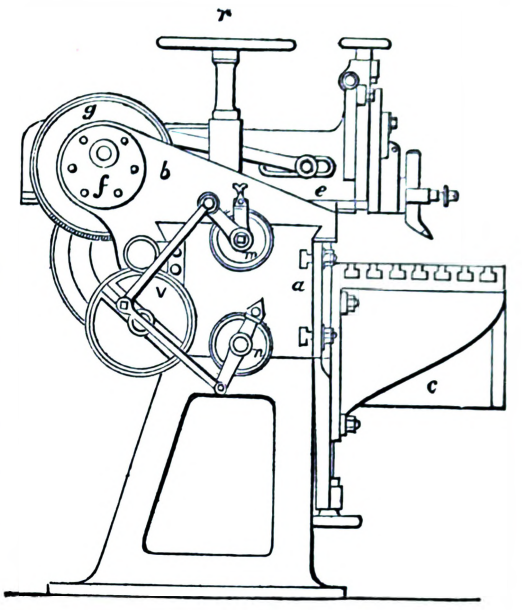

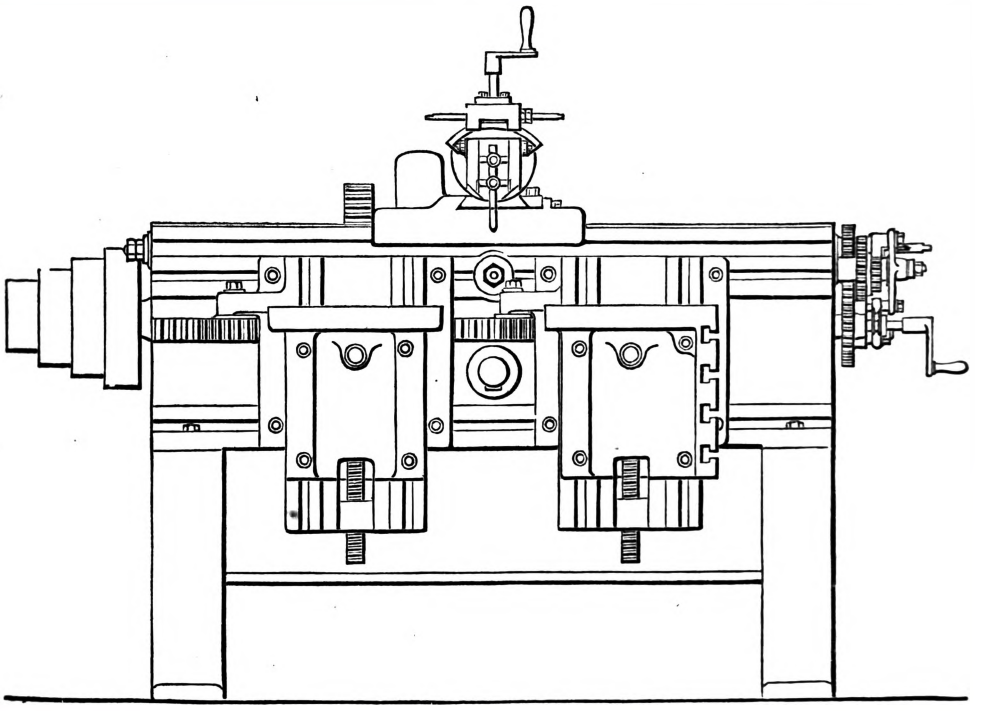

fixed pin acting as a centre, and is attached at the other end to the ram by a connecting rod, thus obtaining a reciprocating motion to the ram with a greatly accelerated return. The ram is made hollow, of U-shaped form, so as to allow the connecting rod to pass in the middle, and thus avoid tendency to side thrust.

Curvilinear Slotting Machine, by Sharp, Stewart, and Co., Fig. 5248.—The base of the machine consists of a bed-plate, similar to that of a lathe, at one end of which is fixed the head carrying the driving gear, while the remainder forms a slide upon which a table supporting the wheel to be slotted can be traversed. This table is double, the lower part being rectangular, and fitted to the bed of the machine, and the upper part circular, furnished with worm-teeth round its circumference, and capable of revolving on the lower portion. The wheel to be slotted is bolted down to this upper

table by bolts passing through the boss, and a slow revolving motion is given to it by a worm gearing into the teeth around the circumference of the table. The cast-iron block interposed between the wheel and the table enables the height of the wheel to be adjusted, so that the centre of the

5247.

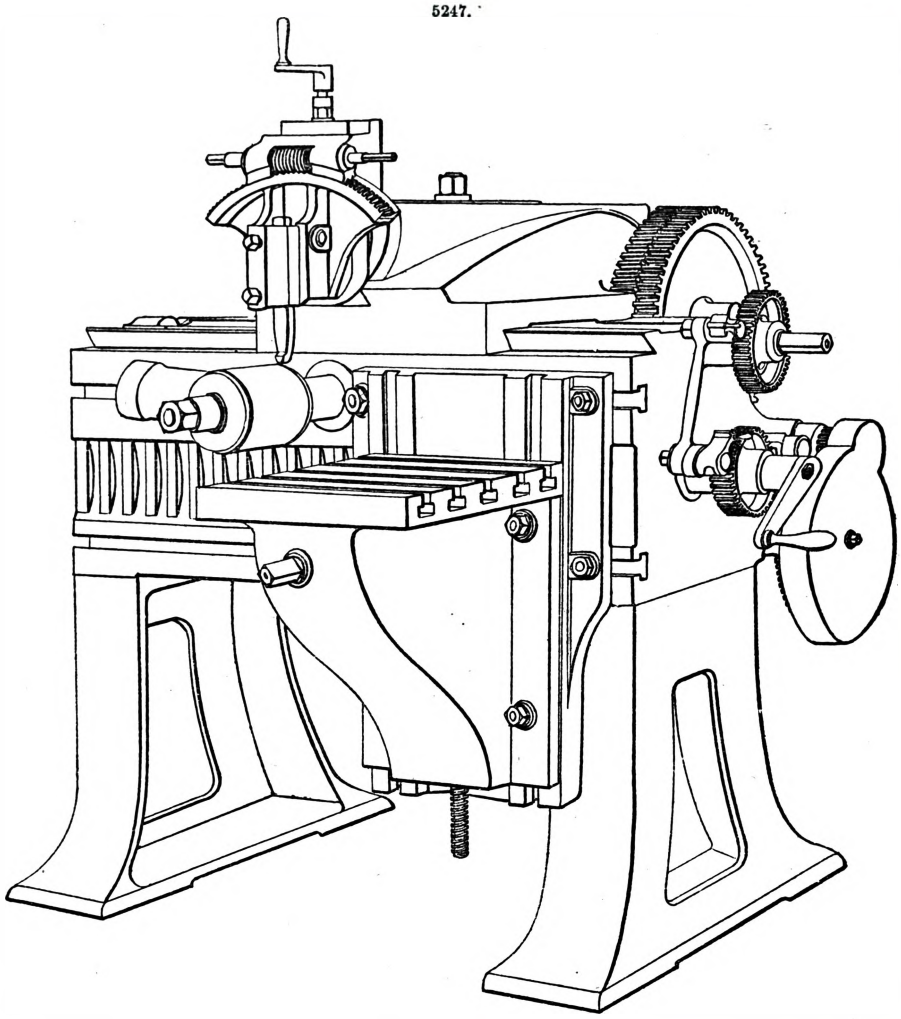

5248.

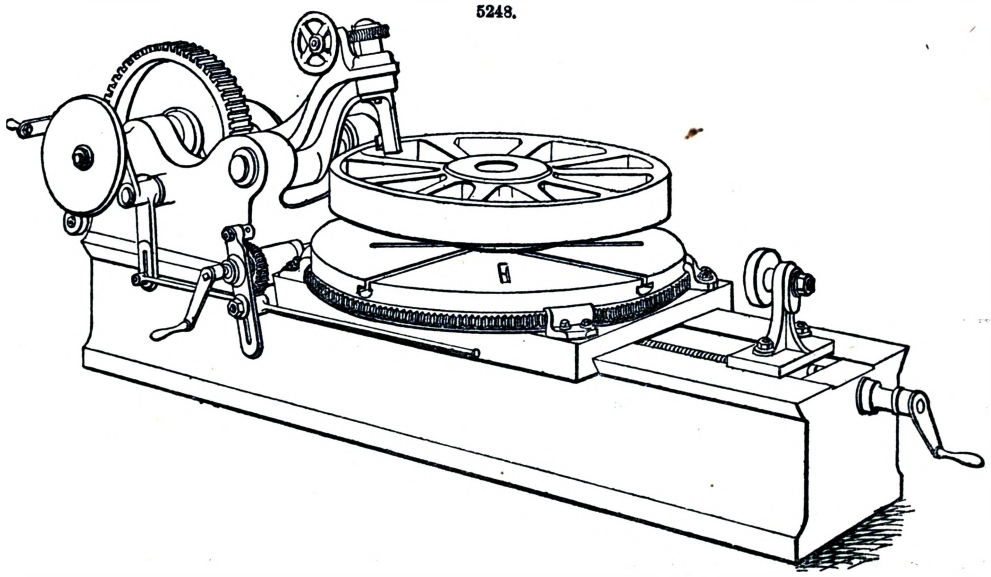

wheel is in a line with the centre of the shaft upon which the lever working the cutting tool vibrates; different blocks being used to suit the various thicknesses of wheel bosses. The blocks have circular ledges formed on them, which enter the holes in the wheel bosses, and thus allow the wheel to be at once set, so that their centres coincide with that of the revolving table. The fixed head of the bed-plate carries a short shaft, to one end of which is keyed a wheel furnished with a crank-pin adjustable in a slot on the face of the wheel, so that the stroke given to the cutting tool can be varied. This crank-pin carries a brass block working in a slot in a bent lever which vibrates on a short shaft also supported by the fixed head, and carries at its other end the tool-holder. The crank-wheel shaft revolves from left to right, the tool has therefore a slow downward and quick return motion given to it. At the outer end of the crank-wheel shaft is fixed a spur-wheel, furnished with a cam groove for working the feed-motion of the revolving table, and driven by a pinion on the counter-shaft carrying the fast and loose pulleys.

The upper part of the tool-holder forms a short shaft passing vertically through the end of the vibrating lever, and furnished at its upper end with a worm-wheel. By means of a worm gearing into this wheel and worked by hand, the tool can be made to revolve—the point describing an arc of a small radius—and it is thus enabled to cut out the curve that occurs at the junction of the rim and spokes of an engine-wheel. The circular motion of the table is of course stopped while this operation is being performed. Besides being bolted down to the revolving table, the wheel which is being slotted is supported under its rim by two pulleys, carried by a slide, adjustable on the bed of the machine, to suit wheels of various sizes. The machine is compact and well arranged, and turns out excellent work.

Wheel-cutting Machine.—A wheel-cutting machine, for shaping the teeth of wheels, may be regarded as a special form of the shaping machine, in some cases combined with the turning lathe. The wheel to be cut is fixed on mandrels carried at the end of a rotating spindle, mounted on a head-stock. Sometimes that spindle acts as a lathe-spindle, while the wheel is being turned. When the pitching and tooth-cutting are to be begun, a large worm-wheel, permanently fixed on the spindle, is made to gear with a tangent-screw, by means of which it is successively turned through a series of angles, each equal to the pitch-angle; first, for the purpose of pitching the wheel, or marking the pitch-points of the teeth on the pitch-circle, and then for the purpose of changing the position of the wheel after each tooth has been cut, preparatory to cutting the next tooth. The figures of the teeth are given approximately by casting, and finished by cutting.

Each stroke of the cutter is guided so as to take place along a straight line. In spur-wheels that straight line is parallel to the axis; in bevel-wheels it traverses the apex of the pitch-cone; in skew bevel-wheels it is a generating line of the hyperboloidal surfaces of the teeth. When a single cutter is used, the slide in which it works is guided into the proper positions for the successive strokes by a templet shaped like a tooth or like the space between two teeth. In cutting the teeth of spur-wheels, a rotating circular cutter is used; and the form of the cutting edges of its teeth is the counterpart of that of the space between two teeth.

Fig. 5249 illustrates Wm. Muir and Co.'s wheel-cutting and dividing machine, to cut spur, bevel,

5249.

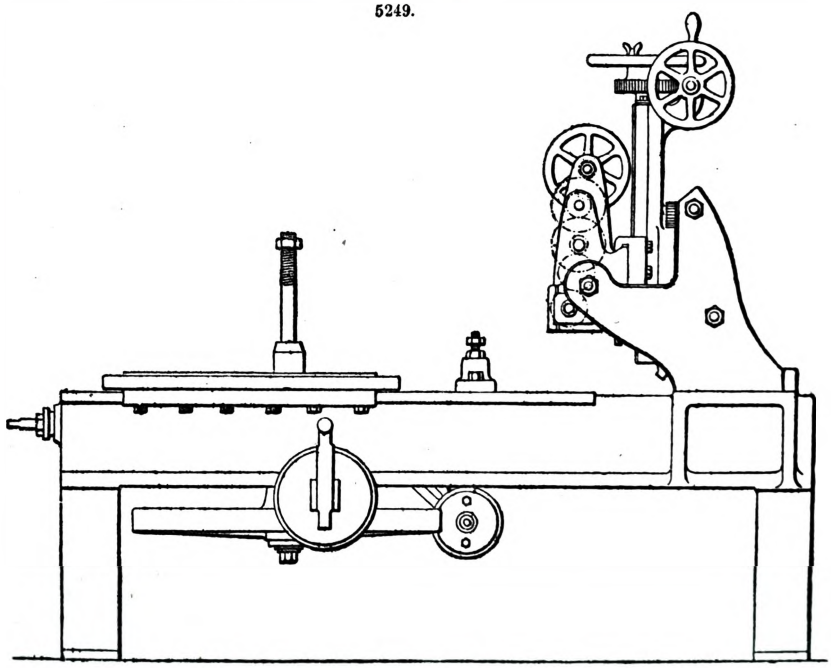

worm, and skew wheels, either in metal or wood. It is mounted on two feet, and has a slide table movable along the bed by a screw so that the wheel or other object to be operated upon may be quickly and accurately brought in contact with the cutter—which has a vertical and angular movement, communicated to it by a worm and wheel. There is a fixed head-stock and gearing for driving the cutters, and a vertical slide with full swivel indexed so as to give the correct curve and

angle to cutter. The machine is furnished with a machine-cut dividing wheel for all numbers of teeth up to 100, and for composite numbers above; it has also a division wheel and handle, and an adjustable swing driving apparatus with grooved cones for driving by gut band.

Screwing Machine.—In the screwing machine designed by Wm. Sellers, of Philadelphia, the screw-thread is cut in a single operation, and the finished bolt is released by the withdrawal of the dies, the machine being driven continuously in one direction, without reversing or stopping.

Sellers' machine, as made by Sharp, Stewart, and Co., is shown in Figs. 5250 to 5255. Fig. 5250 is a longitudinal section through all the working parts of the machine, and Fig. 5251 an end elevation; Fig. 5254 a longitudinal section of the die-box, enlarged, and Fig. 5255 a front elevation of it, with the cover-plate removed, in order to show the dies.

The dies for cutting the screw-threads are in three separate pieces A A A, Fig. 5255; these are advanced and held in the required position for screwing the bolt by means of eccentric ribs or cams fixed upon the cover-plate at B B B, which work in a notch in the edge of each die. In working, the die-box C revolves in the direction of the arrow, being driven from the driving shaft D, Fig. 5250, by the pinion E and spur-wheel F, and the projecting clutch G, on the back of the wheel F, carries round with it the cam-plate H, which thus revolves at the same speed as the die-box C, so that the relative position of the cams and dies remain unaltered in revolving, and the dies are held up to the proper position for cutting the thread without alteration during working.

5250.

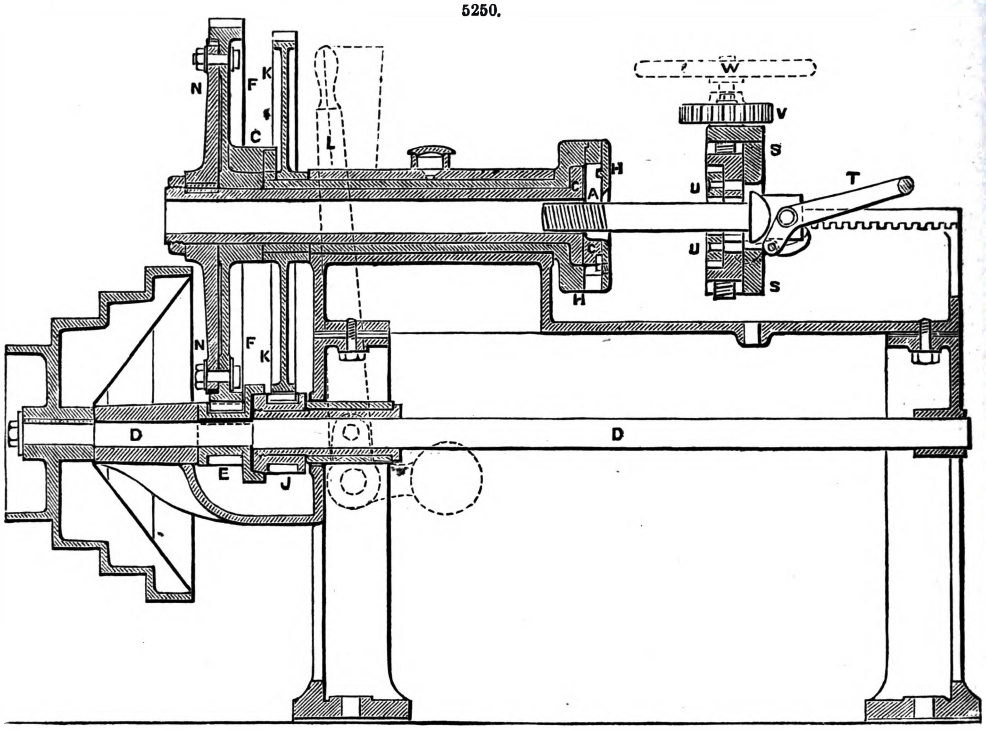

When the screwing is completed, the bolt is released by the dies being all simultaneously withdrawn by means of the cams; this is effected by the second pinion J, Fig. 5250, gearing into the spur-wheel K fixed on the shaft of the cam-plate H. This pinion J is a little larger in diameter than the driving pinion E, and runs loose on the driving shaft D during the time that the dies are in operation cutting a screw; but when that is completed, the conical friction-clutch between the two pinions is caused to engage by pressing forward the handle L, shown dotted in Fig 5250, whereby the spur-wheel K, being of a little smaller diameter than the wheel F, is made to revolve faster than the latter, and causes the cam-plate H to over-run the die-box C; the dies A, Fig. 5255, are thus made relatively to move back along the cams, so that they are withdrawn from the finished bolt, which, being released, is drawn out by hand, while the machine is still driven continuously in the same direction, without stopping or reversing. The handle L on being released is immediately brought back to its original position by means of the counterbalance weight attached to it, thus disengaging the pinions E and J, and pressing the loose pinion J against a leather collar on the end frame of the machine, the friction of which checks the motion of the pinion J and the spur-wheel K of the cam-plate, allowing the die-box C to overtake the cam-plate again; the dies are thus moved forward along the cams till they are again in their original working position, ready for cutting a fresh thread.

The adjustment of the dies to the exact position required for the size of the bolt to be cut is accomplished by means of a graduated index M, Fig. 5251, on the spur-wheel F, which drives the die-box C. The wheel F is loose on the shaft of the die-box, and in working is clamped by set screws to the arm N, Figs. 5250, 5251, which is keyed on the shaft. For advancing the dies, the arm N is turned forward in the direction of the rotation, as shown by the arrow, carrying the dies forward along the cams, the latter being held stationary at the time by holding the spur-wheel K

that is fixed on the cam-plate shaft. The dies are thus advanced to the position for cutting, and the spur-wheel F is then clamped securely to the arm N by the set screws, having previously been turned so that the projecting clutch G on the back of the wheel F is engaged with the wheel K of the cam-plate. The machine is then ready for starting to work. The total length of the graduated index corresponds with the total length of the cams; and two holes in the wheel F for each of the set screws are sufficient to admit of adjustment throughout the entire range of the index, by means of the slotted arc at each extremity of the arm N.

5251.

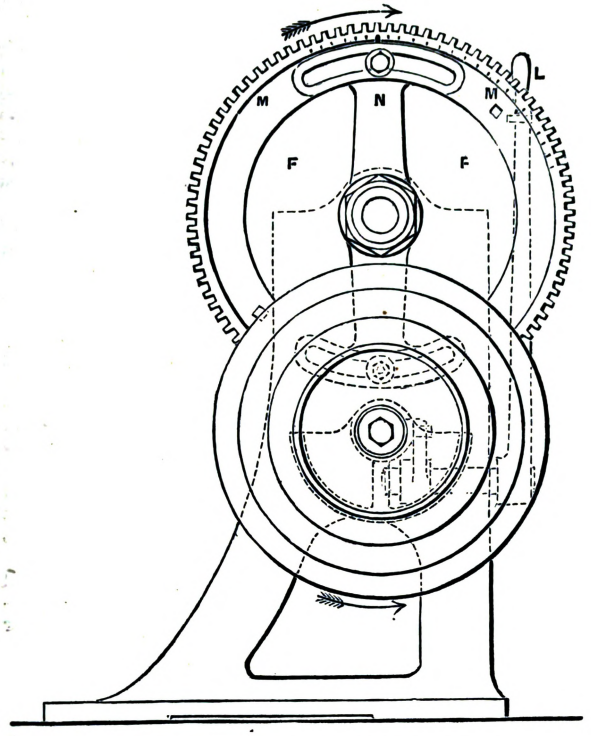

5252.

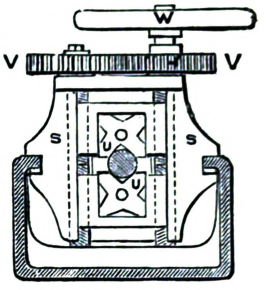

5253.

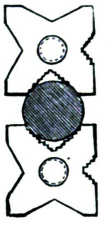

5254.

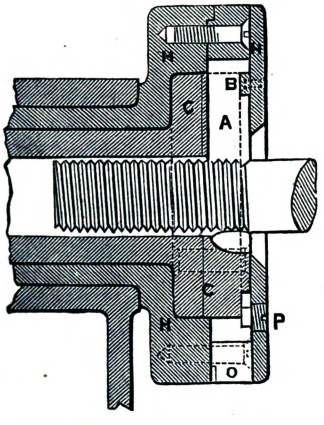

5255.

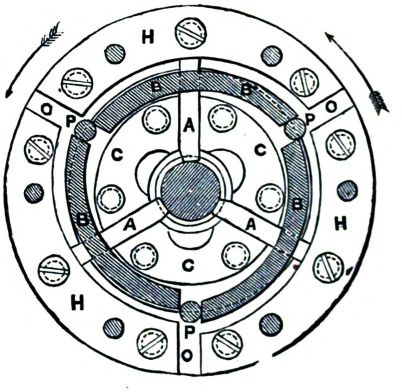

For changing the dies in the die-box, the spur-wheel K is turned forward by hand, as far as it will move; this brings the dies opposite the openings O in the cam-plate H, Figs. 5254, 5255. The three fixing screws P are then slacked back till their inner ends are flush with the inside of the cover-plate, when the dies can be pushed out through the holes O. In putting in the fresh dies, each die is inserted in turn, and pushed down until the notch in its edge comes opposite the fixing screw P, which is known by a shoulder on the screw-driver; and the cam-plate is worked backward and forward by hand, by means of the wheel K, to make sure of the die being properly placed with the notch fitting on the cam; the fixing screw is then set up, which secures the die from falling out. In order to cut a full screw-thread on the bolt in once running up, the dies are cut with a perfectly full thread throughout, and of such size as to fit the bolt when it has the thread cut complete upon it. The tops of the die-threads are then eased off on the side where the bolt enters, as in Fig. 5254, commencing at the base of the thread, and terminating at the top of the third or fourth thread from the point of entering. The thread on the bolt is thus formed by

a succession of cuts, each one deeper than the preceding, until the full depth is attained. When the machine is used for tapping nuts, the cutting dies are removed, and the tap-holder, Figs. 5256, 5257, is inserted in the hollow spindle of the die-box, and secured from turning by a blank die, Figs. 5258, 5259, which serves as a key fitting into the notch in the tap-holder. The bolt or nut to be screwed is fixed in the sliding holder S, Figs. 5250, 5252, sliding freely on the top edge of the framing; the handle T is made with a finger on it, to fit in a rack on the framing, which gives sufficient leverage for the momentary pressure that has to be put upon the bolt on its first contact with the cutting dies to ensure its entrance.

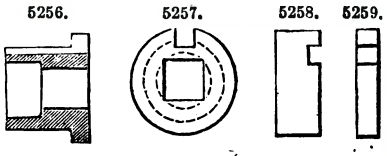

The clamps U for gripping the bolt or nut, shown separate in Fig. 5253, are opened or closed simultaneously, one up and the other down, by two right-and-left-handed screws geared together by the pinion V, and worked by the hand-wheel W. It is essential that the bolt or nut to be screwed should be truly in the axis of the die-box, which is ensured by boring the clamps in their places in the machine, and they are afterwards slotted to the required shape. In cutting new dies, or recutting old ones, a set of master-taps is used; the leading end of the master-tap is supported in a circular timber, which slides inside the hollow spindle of the die-box.

The dies are then pressed close upon the master-tap by means of the arm N on the spindle of the die-box, Fig. 5250, and the machine is run forward and backward, the dies are again closed upon the tap, and the process repeated until a full thread is obtained. A small stop is first inserted in the clutch G between the spur-wheels F and K, so as to make them immovable with respect to each other during the process of cutting the dies.

In this machine the necessity of setting up the dies by hand between successive cuts is obviated, as they are set up at the first by the graduated index of the cam-plate to the exact diameter required for the finished bolt, and the screwing is completed in once running the bolt up. With each machine a table is prepared, showing the position on the index to which the pointer has to be set for cutting bolts of the various diameters within its range; and a slight change in the position of the pointer will make the bolts slightly larger or smaller, as the case may require. When the dies have become worn, and have been recut, a readjustment of the index readily gives the means of bringing them up to exactly the same diameter as previously, so that the size of bolt is not altered by recutting the dies. The original adjustment of the index is made by actual trial of the different diameters of bolts in the machine, the results being tabulated; and this is done again when the dies are recut.

This screwing machine has the advantage of rapidity of action, producing a perfect screw-thread in once running up, while the time usually required for running back is saved by the plan of withdrawing the dies and releasing the bolt. The machine is never required to be stopped, except for changing or repairing the cutting dies, and does not need the application of a crossed belt or reversing apparatus for driving it, since it runs continuously in one direction only. It is of small size in proportion to the work it accomplishes, and is on a plan very convenient for the workman using it. As the dies can be readily adjusted to any diameter of bolt for which the machine is adapted, they can be worn down for a long time before requiring renewal.

5260.

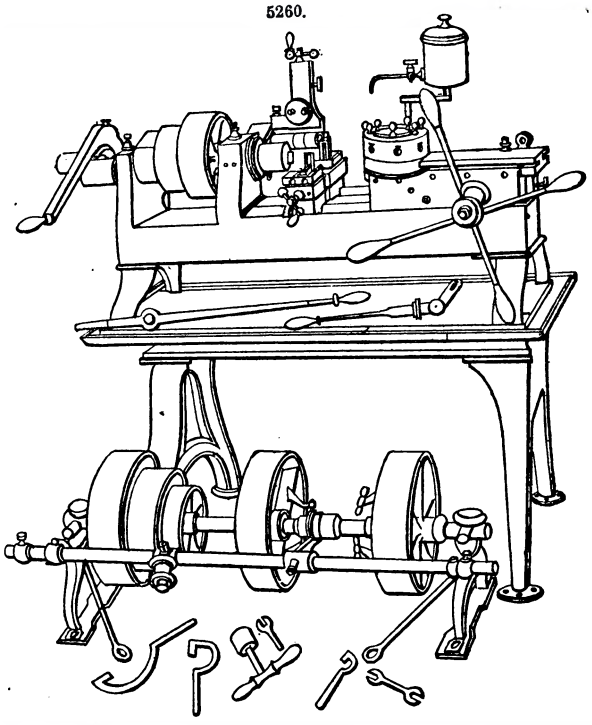

A screwing machine made by the Brown and Sharpe Manufacturing Co., Rhode Island, is shown in Fig. 5260.

This machine is suitable for making, from bar iron, all kinds of screws and studs ordinarily used in a machine shop. Nuts can be drilled, tapped and one side faced up, and many parts of sewing machines, cotton machinery, gas and steam fittings made on this machine, with a great saving of time and labour. Size of hole through spindle is $1\frac{1}{4}$ in. Size of holes in revolving head, $1\frac{1}{16}$ in. Length that can be milled, 6 in. The friction-pulleys on the counter-shaft are 14 in. diameter, and $3\frac{1}{2}$ in. wide. Counter-shaft should run 170 turns a minute.

Milling Machines. — Milling, or slabbing machines, as they are sometimes called, are the most effective and the most speedy of all machines directed to metal cutting.

Operating with rotary serrated cutters, we find by applying the rule of multiplying the length of the edge by the rate of movement, that milling machines should displace a great deal more metal in a given time than either turning or planing machines.

From the substantial manner in which the cutting tools are held and guided in milling machines, their edges can be much longer than in other cases.

The reason that we cannot avail ourselves of milling machines for all kinds of work is that the surfaces have to be cylindrical, with a large number of edges that must be exact duplicates, and stand in a positive position; the least derangement or wear upon one or more of the edges carries them below the cutting plane, and throws their work upon the next, which is then almost sure to break. The processes of forging, finishing, hardening, and sharpening milling tools are expensive and difficult, and another objection is that the cutting edges having necessarily a profile corresponding to the work, cannot, except for flat surfaces, be used as tools for general purposes.

Milling, as a process, is speedy and profitable on work where there is no danger of injury to the cutters, and where the work is a duplication of pieces, that have the same form. In practice we find this carried out. For cutting clean iron or steel, where is no danger of meeting with scale or hard spots, and when a large number of cuts of the same kind are to be made, we invariably find the work done with milling tools.

Cutting the teeth of wheels is an example; the blank is first turned out of good, clean material, and the operation of cutting is that of making duplicate notches or spaces between the teeth. In the manufacture of small arms or of sewing machines, where the forgings are made from the cleanest iron or steel, and carefully picked to remove the scale, they are successfully and rapidly shaped by milling tools.

Machines for milling consist of a cutter-spindle, having a lateral adjustment, and a movable platen to carry the work. Their modifications are almost endless, being in a sense special tools, and we scarcely meet with two that are arranged in the same manner unless applied on the same work.

Fig. 5261 is a universal milling machine made by the Brown and Sharpe Manufacturing Co., Rhode Island. It has an elevating knee upon which are arranged a sliding plate, a swivel-plate, and a sliding carriage with a revolving cutter-head. Thus, this machine, which is of particular service in sewing-machine making, has all the movements of a plain milling machine, and the following in addition;—The carriage moves and is fed automatically, not only at right angles to the spindle, but at any angle, and can be stopped at any required point. On the carriage, centres are arranged in which reamers, drills, and mills can be cut, either straight or spiral. Spur and bevelled gears can also be cut. The head which holds one centre can be raised to any angle, and conical blanks placed on an arbor in it, cut straight or spirally. Either right or left hand spirals can be cut.

5261.

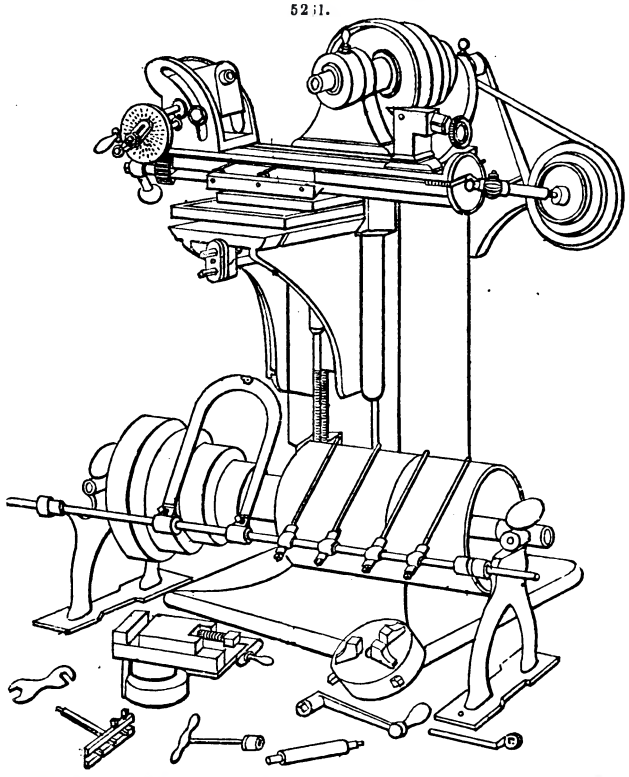

Crucible steel being more homogeneous than iron, is best adapted to milling processes, the hard pins are not met with as in iron, and when the cutter-heads can have a sufficient diameter to allow the cutters to be mounted in such a way as to be removed to sharpen them, there is no doubt but a great gain can be made, in any kind of cutting to which the process can be applied.

David Hanson's Flanging Machine, Fig. 5262, made by Wm. Muir and Co., Manchester, is an extremely useful tool for boiler makers. The tube to be flanged is fixed on a powerful chuck, furnished on its lower side with a bevel gear driven directly from the pulley *p*, the flanging tools having been previously adjusted by the arrangement shown to the right of the engraving.

Figs. 5263 to 5271 are views of a set of machine tools made by Wm. B. Bement and Son, of Philadelphia, for railway purposes. The construction of Bement's machines is well worth careful attention, and we regret that, owing to circumstances, our illustrations do not sufficiently indicate the ingenious mechanism and extended applications of these important tools.

Locomotive-frame Slotting Machine, Fig. 5263.—This machine is intended for shaping the framing of locomotives in America, where such frames are made from rectangular bars in order to secure the needed strength, and yet be in a degree flexible. The side rails are fastened to the table *a*, along which the cutting mechanism is traversed by means of the rack and pinion seen on the side of the main frame.

The cutting movement corresponds to the Whitworth shaping machine, having a quick return and uniform forward motion. In American locomotives the bearings of the axles are fitted into

crotches formed in the frames, and these crotches have angular faces with a wedge to compensate or wear. To slot or shape these crotches or pockets an angular movement of the tool across the

5262.

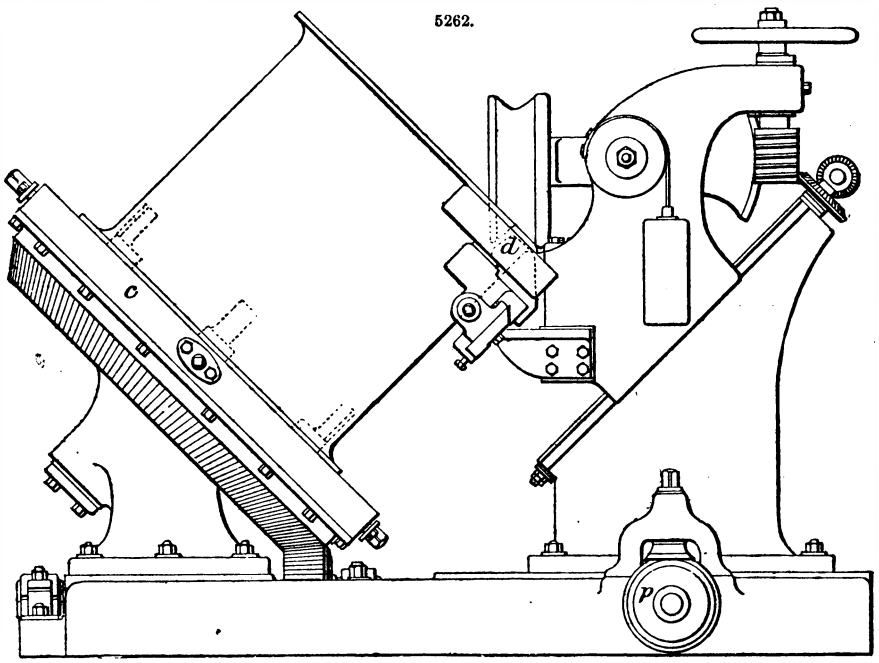

5263.

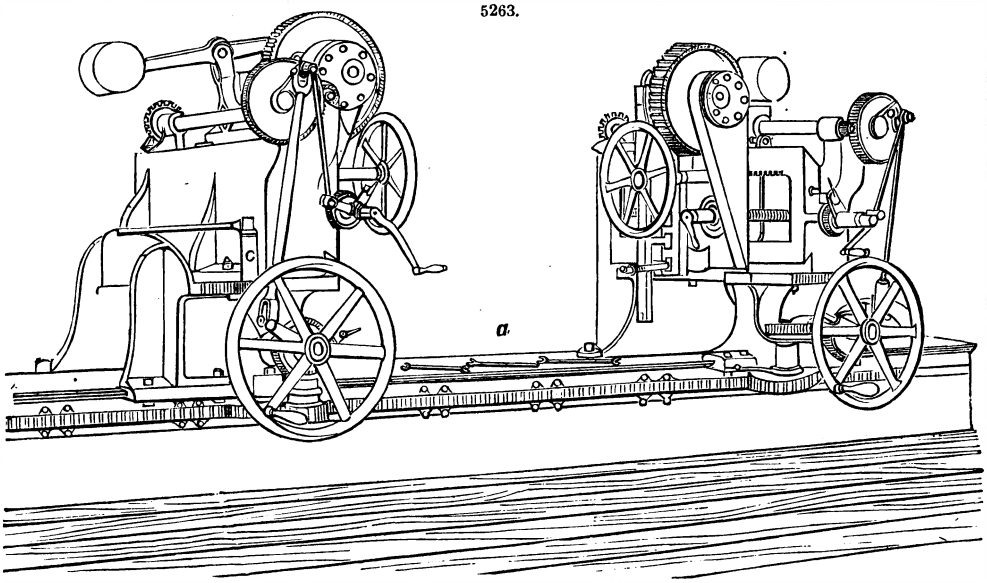

bed is needed; this is obtained by swinging the cutting head to the required angle by means of the rack and pinion seen at *c*. The head is provided on the axis of the vertical driving shaft that communicates motion to the cutter-bar. The driving pulleys are 30 in. diameter and 6 in. face, length of stroke, 12 in.; 24 ft. bed; and 16½ ft. between tools.

Bolt Threading Machine, Fig. 5264, intended for threading screws of all kinds used in bridge-building, railway carriage work or other uses to 2 in. diameter. The revolving head contains the dies, which are closed and opened while the machine is running in one direction by means of a friction-clamp operated by the lever seen on the front at 2; by revolving the dies a bolt or rod of any length can be threaded on a short machine, and by having the dies to expand or open while the machine is in motion no running back is necessary.

The clamping frame at *a* is moved on the top of the frame by means of the winch and bevel gears, and a rack and pinion below. The holding dies are closed and expanded equally from a centre, so that no adjustment is needed in changing for bolts of different sizes.

Axle Lathe, Fig. 5265, to turn the bearings, and wheel fits on railway axles. Length of bed, 11 ft.

The lathe is driven by cone with three changes for a 4-in. belt, and strongly geared; this is all that is necessary, as the work is nearly of a uniform diameter.

The feed is automatic, with two changes, operated by a handle attached to the carriage.

The bed is raised in front in order to secure additional strength, to shorten the tool-rest, and to allow the carriage to pass the sliding head; there being but one joint between the tool and the saddle.

The carrier is double, and self-adjusting; the dead spindle clamped by an improved binder consisting of a conical sleeve which adjusts to the wear of the spindle and keeps it central.

The counter-shafts are furnished with two sets of tight and loose pulleys to change speeds for roughing and finishing. There is a water-tank attached to the carriage, and tool closets to the standards.

5264.

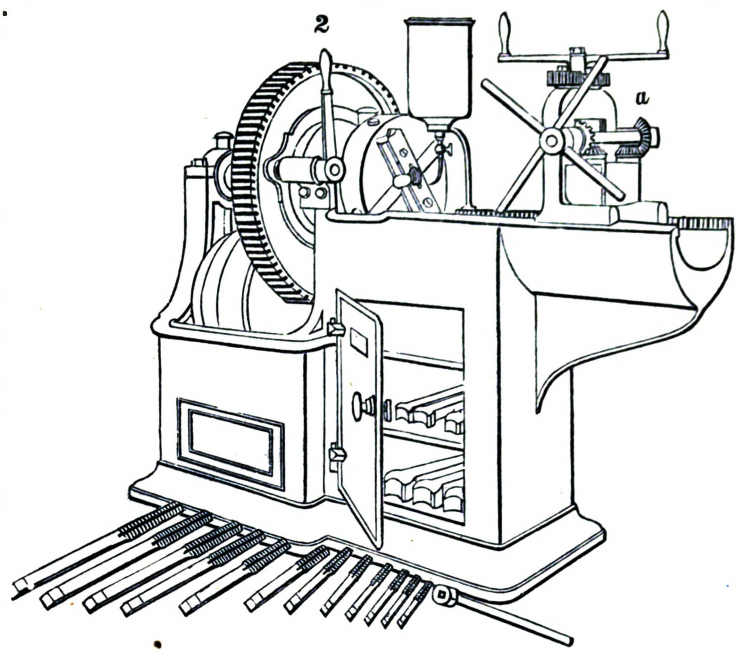

5265.

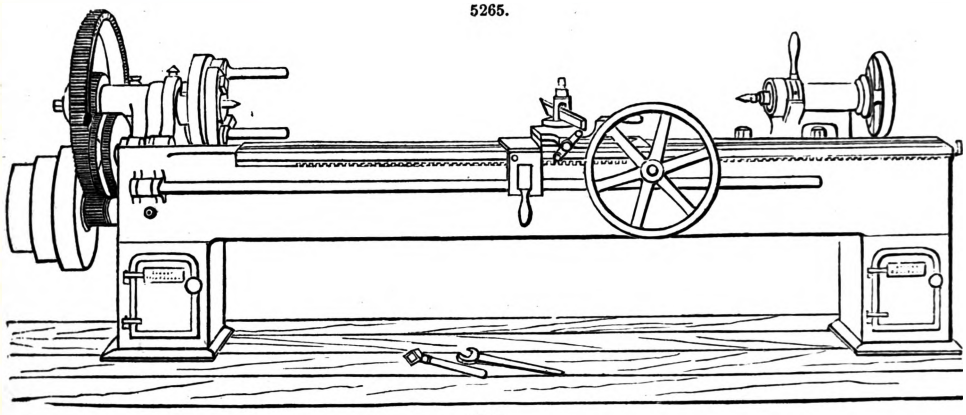

5266.

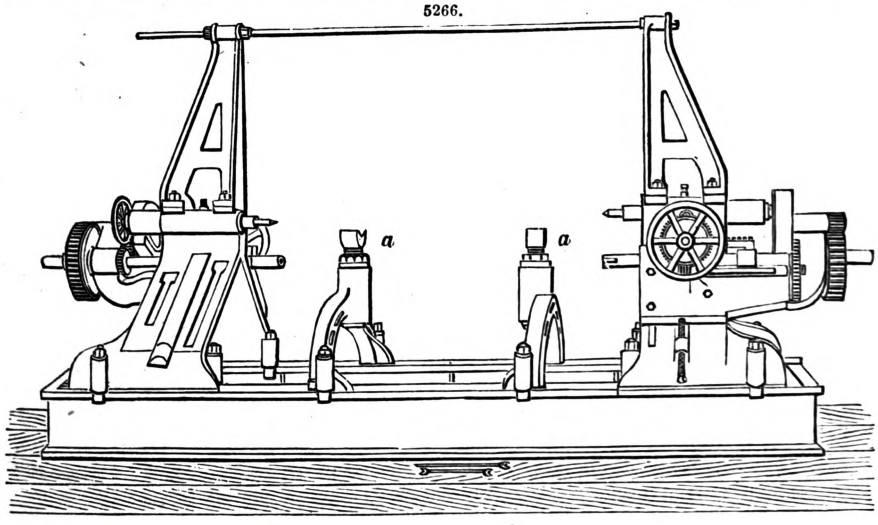

Wheel Quartering Machine, Fig. 5266, for boring the holes for the wrist-pins in both drivers of a locomotive engine at the same time, after they have been keyed to the axle. The axle is mounted

between the centres, as in a turning lathe, and the bed is 14 ft. long. The angular fans on which the boring frames are mounted are planed accurately to an angle of 45°, and the boring spindles

5267.

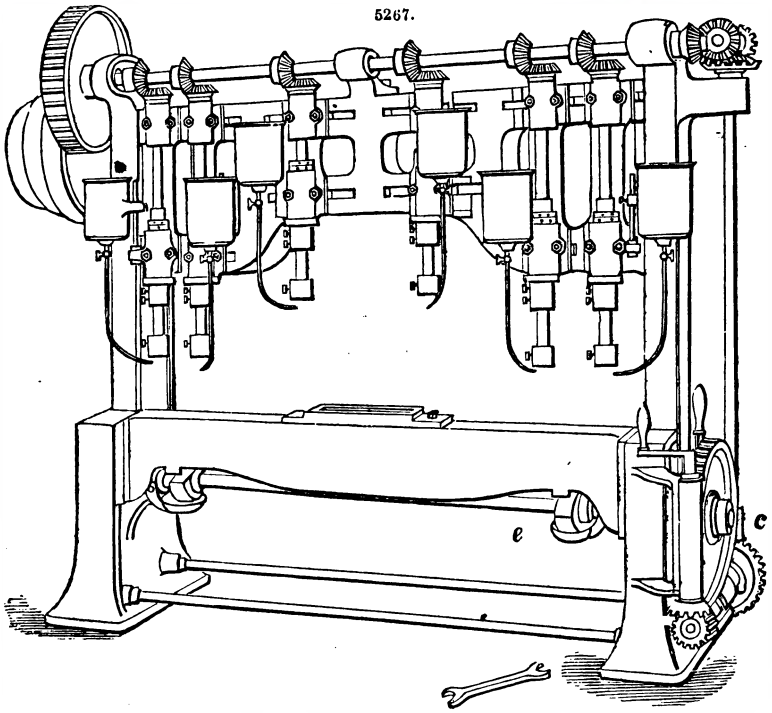

are moved up or down on the heads by means of screws, to suit the radial length of the crank and the stroke of the engine.

This arrangement of the whole mechanism and axle supports on one frame ensures not only that the cranks shall stand at right angles, but that the holes shall be bored parallel to the axle.

The two stands are to support the axle while mounting it, and to adjust it to the centres. The supports *a a* are to support the axle and wheels in mounting and removing them from the machine.

Multiple Drilling Machines, for Truck Irons or Braces, Fig. 5267.—Truck irons are bent before drilling to a shape indicated by the position of the lower end of the spindles. The bed or platform C is raised by cams seen beneath, and feeds the work up to the spindles, so that six holes are bored at the same time and in the proper position without laying out.

These braces were formerly punched, but their strength was found to be so much impaired by the operation that drilling had to be resorted to.

The feed-motion is connected from the top shaft by the vertical one seen on the right operating the tangent-wheel *c*, which is keyed to the cam-shaft *e*.

Wheel Boring Machine, Fig. 5268, intended for boring cast-iron car-wheels, the only kind used in America. *a* is a running table, or face-plate, having an opening below for chips, and driven by a bevel-gearing beneath. It is supported on a Schiele bearing that has a diameter at the top equal to half that of the table.

The jaws *c* are mounted on sliding

5268.

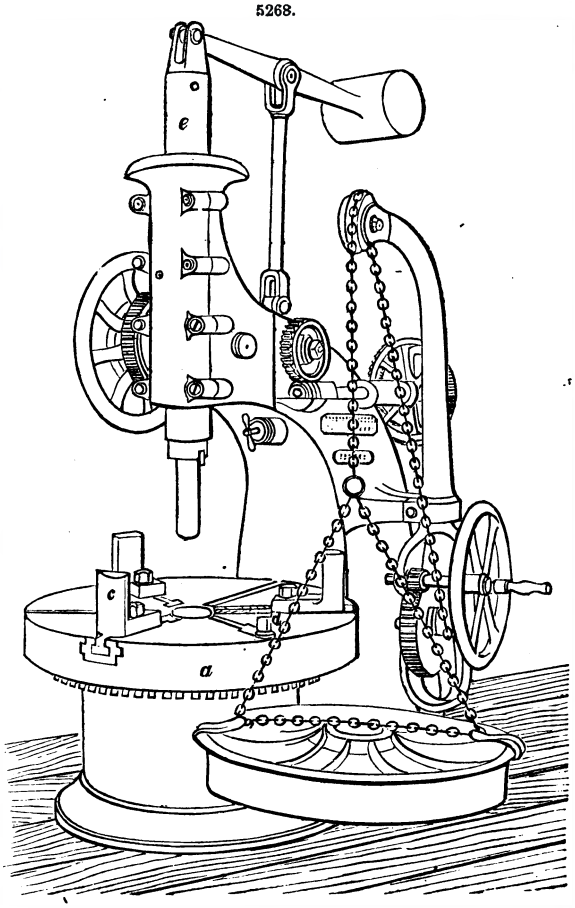

pieces fitted into the face-plate, and when fastened are all moved consecutively by means of a volute ring beneath the plate operated by the square shank *d*. The cutter-bar *e* is of cast iron, of large diameter, to secure rigidity, and is fed down by means of a rack at the back and the gearing seen on both sides of the main frame.

The wheels are loaded and unloaded by means of the crane at the side.

Compound Planing Machine for Connecting-rods, Fig. 5269.—The table *a* is moved at a uniform speed each way by means of a screw beneath and the ordinary reversing gearing seen at the end at *b*. The tools at each end act as the table moves backward and forward, which with four tools acting, quadruples the work of an ordinary machine using one tool.

The uprights with the cross-heads are moved to any part of the main frame to suit the length of the pieces to be planed. The cutting is performed alternately at each end of the piece, two or more tools acting at the same time.

5269.

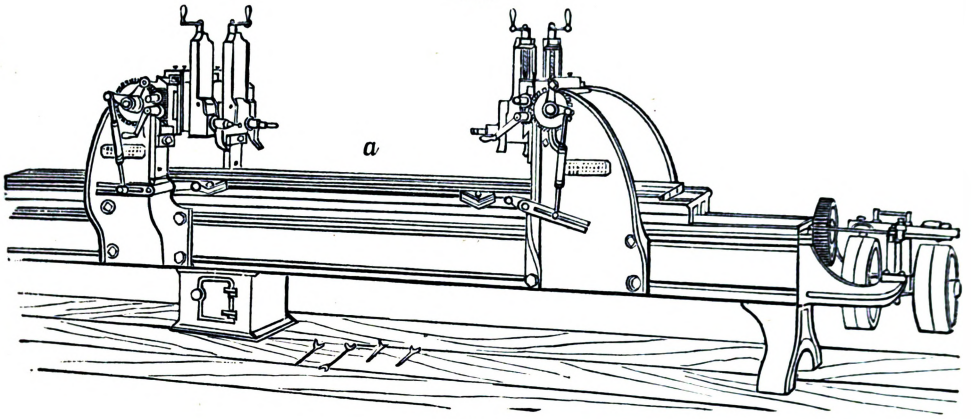

5270.

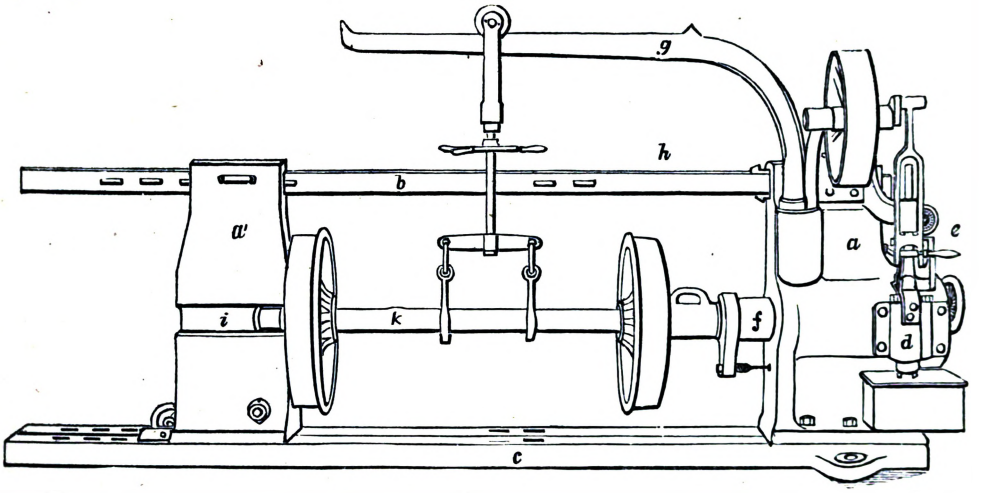

Hydrostatic Wheel Press, Fig. 5270, for forcing on or off the wheels of railway cars. The frames *a a* are connected by a strong strut *b* at the top, and by a cast-iron sole plate *c* at the bottom. The pump at *d* is fitted with a compound piston, one of ·75 in. diameter, fitting through a larger one of 1·75 in. diameter, so that either may act at will by turning the handle at *e*. In starting the piston *f*, and until it comes in contact with the work, the larger piston is used to secure a more rapid movement, and thus save time; the larger piston is then stopped and the smaller one set in motion to secure the required power.

The frames *a a* stand in position sufficiently inclined to allow the crane *g* to swing the axle *h* to a central position in the machine. To press off wheels the frame a^1 is moved to the position indicated by the slotted holes *h*, the axle fitting into the slot at *i*. This frame a^1 is mounted on rollers, so as to be readily changed as required for either putting on or taking off wheels.

Machine for Boring Axle-bearings, Fig. 5271, arranged to bore two at one time. The bearings are clamped by means of the screw and wrench seen on top. The saddle *a* is moved by a screw beneath, driven by the wheel and pinion at the end. The pinion *b*, below, is projected and withdrawn into the bearing to stop or start the feed by means of the handle in front.

Hydraulic Machine Tools.—Hydraulic power can in many instances be successfully and economically applied for working machine tools, which must then be specially arranged. Figs. 5272 to 5297 are of various hydraulic machine tools designed by Ralph Hart Tweddell, which as a whole are the best-planned hydraulic tools that have come under our notice. To a certain extent hydraulic power is best suited for heavy work, and for driving machines that have a rectilinear

or a reciprocating motion, and would consequently not be suitable for such cases as shops in which a number of small lathes or other tools are employed; but this objection does not apply to the construction of iron ships, bridges, boilers, and similar descriptions of work.

5271.

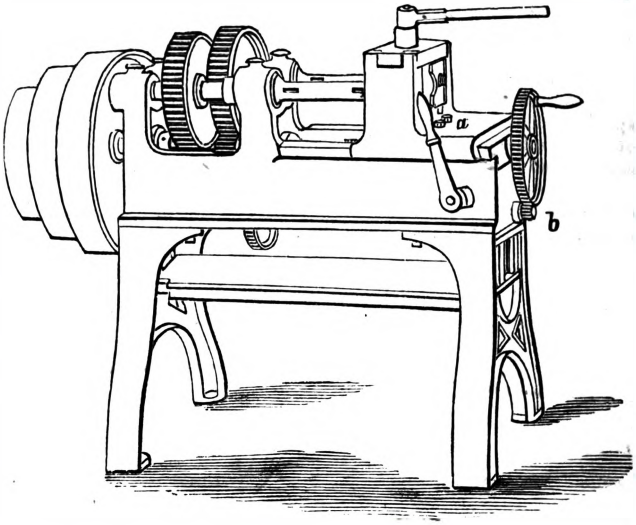

As with Armstrong's system, p. 1963, the power is distributed by means of water conveyed through pipes, under pressure from a natural or artificial head, to the various machines to be worked by it. The pressure used by Tweddell varies from 1000 lbs. to 1750 lbs. a square inch; and as it is not generally possible or convenient to obtain even the lowest of these pressures from any natural head of water, it is obtained from an artificial head produced by means of a direct load or weight, against which the water to be used is pumped, the load thus producing the pressure that would be due to the elevation of a head of water. The accumulator by which this is effected consists of a loaded plunger or ram working in a cylinder, the water being pumped into the cylinder under the pressure of the load upon the ram.

It is chiefly for intermittent requirements, as in the case of shop tools, especially those of the heaviest class, that the accumulator is of advantage; and little or nothing is gained by its intervention for doing any work of a continuous description, because in that case the engine would still be required to be of the same power as is now needed for performing the greatest amount of work that may be wanted at one moment. The principal ground upon which the use of water pressure supplied by an accumulator appears to be preferable as a means of distributing power is that the accumulator ceases to draw upon the engine when there is no useful work to be done, and thus saves fuel and power, together with the wear and tear that take place when an engine is always driving the gearing and shafting, although the machinery driven may not be at work.

5272.

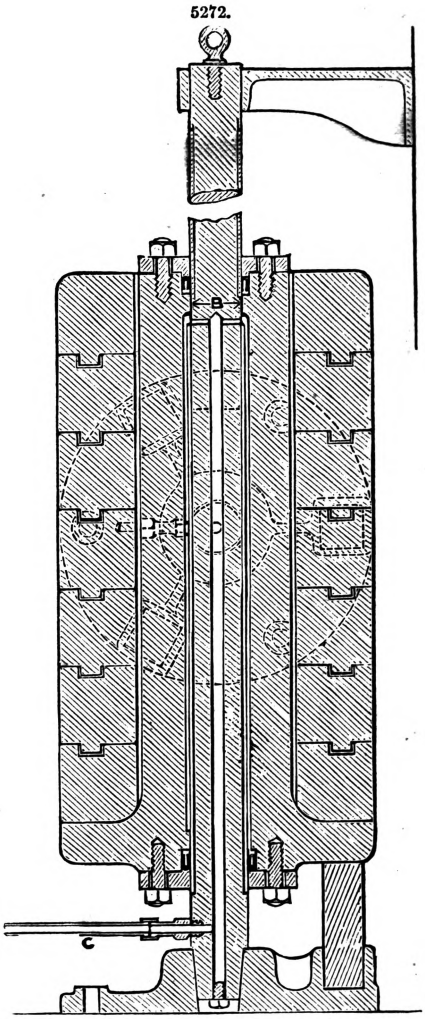

The form of accumulator used by Tweddell, Fig. 5272, ensures a stiffness of spindle not otherwise to be obtained, and gives a compact arrangement for cases where so small a quantity of water is required as for supplying, say, only a single riveting machine. The ram or spindle B of the accumulator is here fixed, and acts as a guide, while the cylinder slides upon it, and is loaded with the weight necessary for giving the required pressure to the water. This plan of accumulator, although not new, possesses several good features. The water is pumped in at the bottom at C, and fills up the annular space surrounding the spindle; and the whole weight has to be lifted by the water acting only on the shoulder of the spindle, which is made by a brass bush $\frac{1}{2}$ in. thick all round the spindle. A compact arrangement is thus obtained, and any required cubic capacity can be had by lengthening the stroke. The accumulator is supplied by two pumps, each $1\frac{3}{8}$ in. diameter and $3\frac{1}{2}$ in. stroke, running at about 100 to 120 revolutions a minute. When the loaded cylinder B reaches the top of its stroke, it is made to close the suction-cock of the pumps, thus stopping the supply of water. When it is desired to put in a new packing leather at the bottom, the weighted cylinder is let down to rest upon blocks placed on the wood chocks at bottom, and the spindle is drawn up out of its tapered seat by an eye-bolt at top; for renewing the top-leather, the bracket holding the top end of the spindle has to be removed.

Fig. 5273 is a half-size section of the leather collar A A used for the accumulator, and for the hydraulic machines worked by it; the collar is secured by the gland B within the recess in the hydraulic cylinder C, a thickness of hemp bedding D being placed between the leather collar and the end of the gland. A brass cup-ring E is inserted within the collar to ensure keeping it open, or a gasket of plaited hemp is employed for the same purpose. At the part where the greatest wear of the leather collar would take place, from the friction of working against the ram or spindle F, a brass guard-ring I is added outside to protect the leather. The friction of the packing leathers and their wear and tear are a frequent cause of hesitation in adopting hydraulic machinery; but by using really good leather, and carefully moulding and fixing the collars in their places, and by giving proper attention to the wearing surfaces, and covering them with brass or gun-metal, as shown at I, more especially in those cases where the leathers themselves move, there is little trouble with the packing leathers. If the surface on which the leathers work is allowed to get dirty, they will become worn as fast as an ordinary engine slide-bar.

5273.

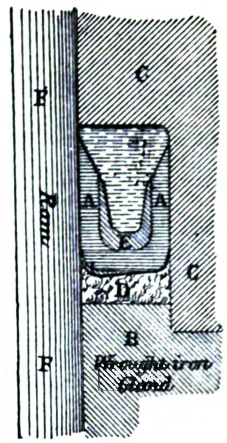

Figs. 5274 to 5279 are of one of Tweddell's fixed hydraulic riveters, made by Thompson and Boyd, of Newcastle-on-Tyne, by whom it has been worked with advantage for several years. Figs. 5280, 5281, show the details of the valve-box and ram. The water from the accumulator is admitted to the cylinder and exhausted from it through the same aperture A, Fig. 5277, by means of a simple hydraulic valve of ordinary construction, shown in the sectional plan, Fig. 5280. The water enters at B, which tends to keep the inlet-valve C shut, the spring D also doing this until

5274.

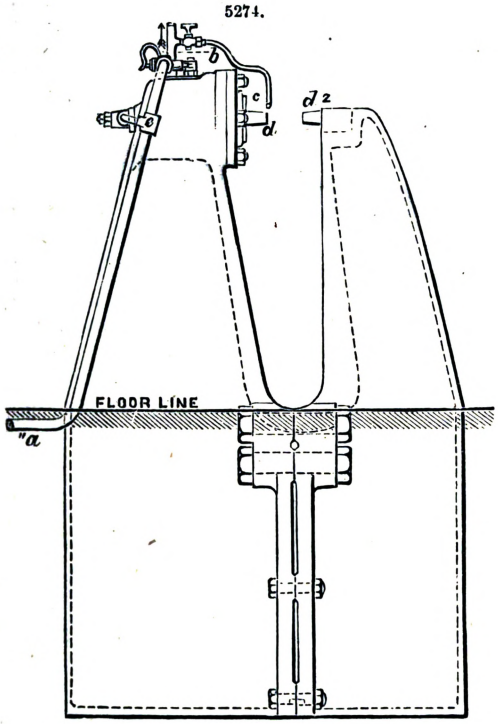

5275.

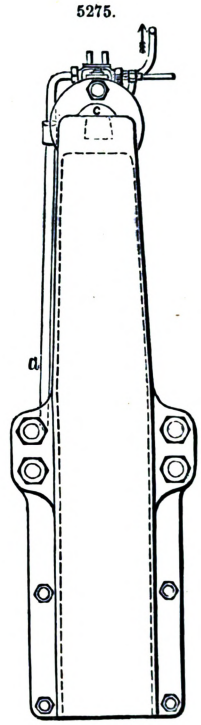

5276.

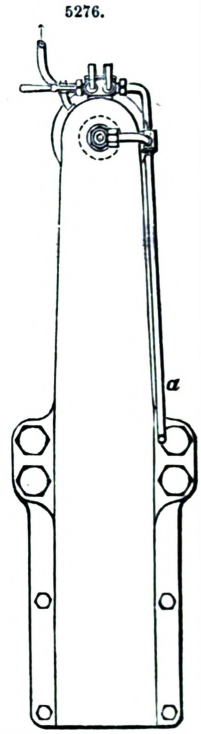

5277.

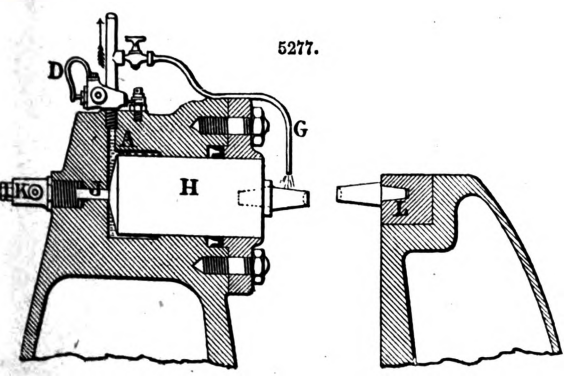

5278.

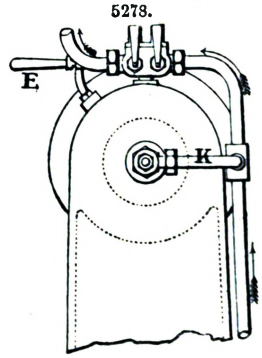

5279.

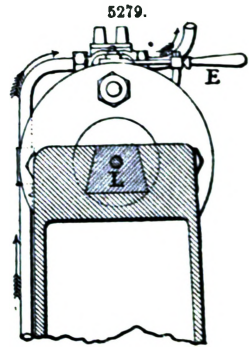

the pressure from the accumulator begins to act. When the water is to be admitted to the cylinder, the valve C is opened by the hand-lever E, and is kept open by hand until the rivet is closed, or

5280.

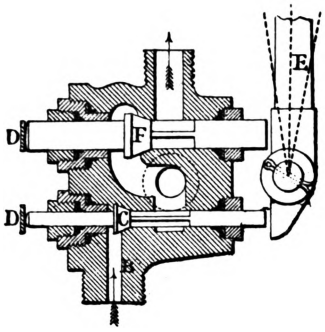

5281.

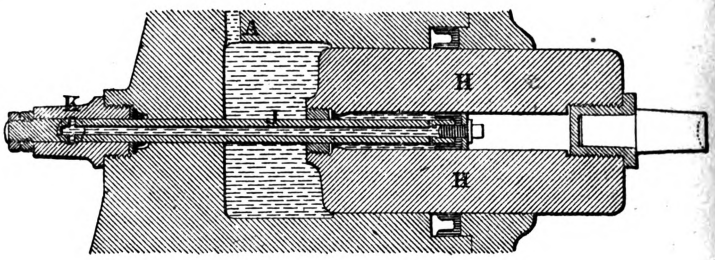

it is wished to stop the ram at any portion of its stroke. The exhaust-valve F is kept shut by the pressure of the water entering the cylinder, and at other times by the spring D. When it is desired to draw the ram back, the exhaust-valve F is opened by pushing the hand-lever over the reverse way to that for opening the inlet-valve C; this allows the exhaust-water to flow back to the pump-cistern, and a small portion of it is allowed to flow upon the die to cool it, through the pipe shown at G in Fig. 5277. The ram H is drawn back by means of the small drawback cylinder J, Fig. 5281, arranged within the ram itself and in constant communication with the accumulator through an inlet at K. The handle E unships readily, and is taken away by the operator whenever absent from the machine. By this plan of valves in combination with the drawback arrangement the greatest possible control is obtained over the machine, the ram being motionless as soon as the hand-lever is released or removed from the valves. The power of control thus obtained is of the greatest importance in riveting and punching, to prevent blind holes and unfair work; and it does away with all necessity for the care usually required in regard to the length of the rivets, as the machine shortens its stroke to suit a long rivet, while if the rivet is too short the machine still closes the plates equally well by extending its stroke. The wedge-shaped fastening of the die in the dolly, shown at L, Figs. 5277, 5279, obviates the necessity for any thickness of metal over the fixing pin ordinarily employed to keep the die in its place; this is of importance in extending the applicability of the machine in riveting flanged and angle-iron work.

In heavy work such as compound marine boilers this machine has put in 900 to 1000 $1\frac{1}{8}$-in. rivets in 1-in. plates in an ordinary day's work of ten hours; and portable boiler work at an average of seven rivets a minute. Fig. 5282 is one of these riveting machines arranged vertically for boiler and bridge work; and Fig. 5283 a horizontal arrangement for ship and bridge work.

5282.

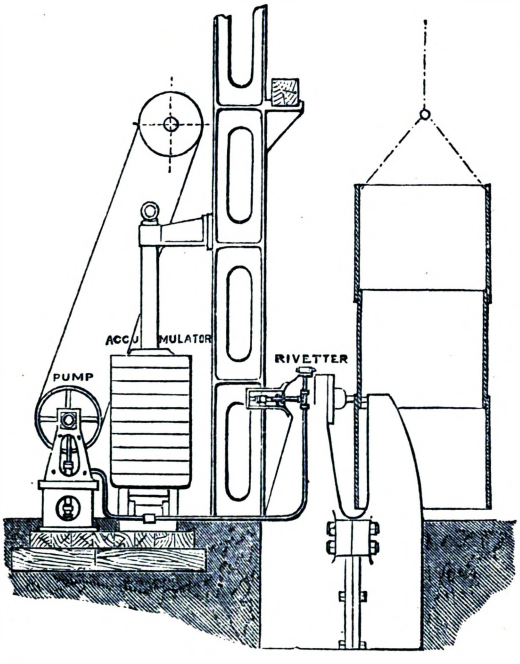

5283.

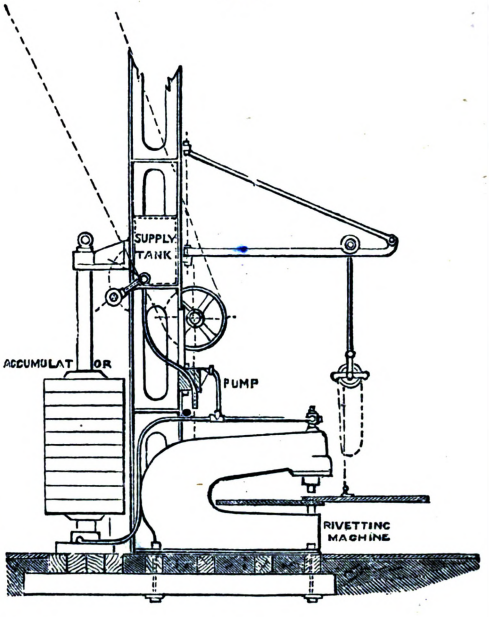

Figs. 5284, 5285, show the general features of Tweddell's portable hydraulic riveters, by Fielding and Platt, Gloucester. The ram *c* working in cylinder *a* being forced out and drawn back by suitable valve-gear; when going out it carries the cross-head *d* forward until the riveting die closes the rivet. The strain thus caused is received by the two tension-bars *g*, and the

ball-and-socket dies e' act as a point of resistance. By using these horns a depth X of from 9 to 12 in. can be taken in. In the drawing it is shown riveting the frame of an iron ship. This arrangement also serves as a very effective punching press.

5284.

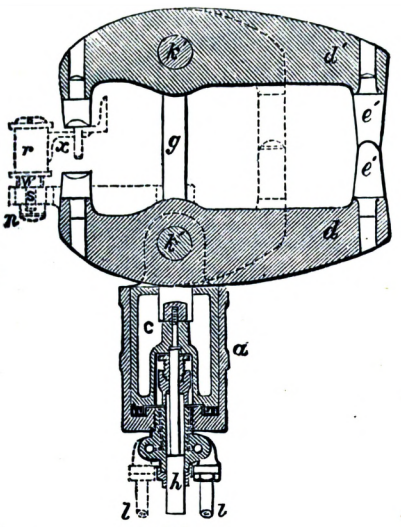

5285.

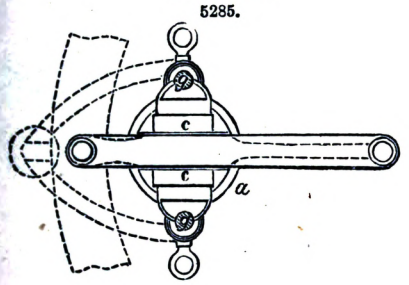

5286.

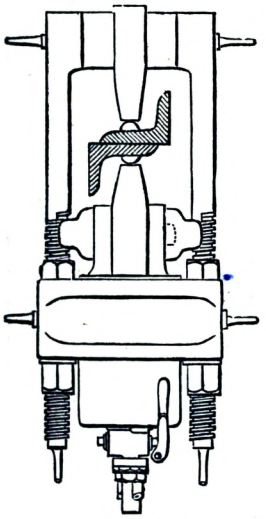

5287.

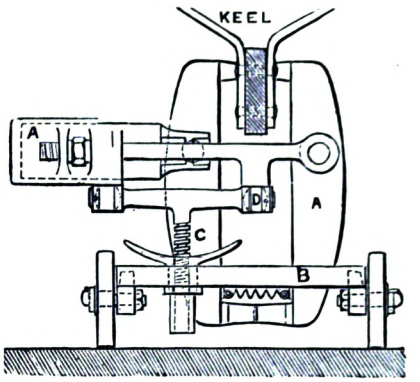

5288.

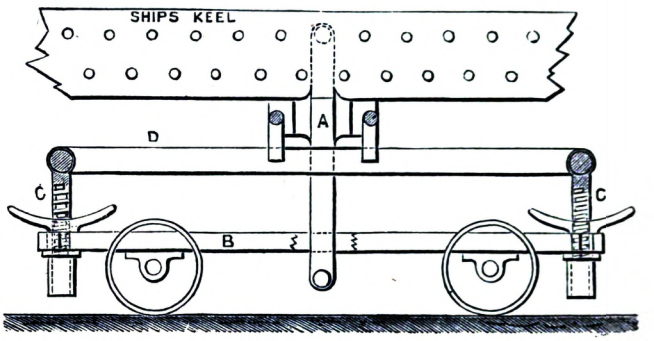

5289.

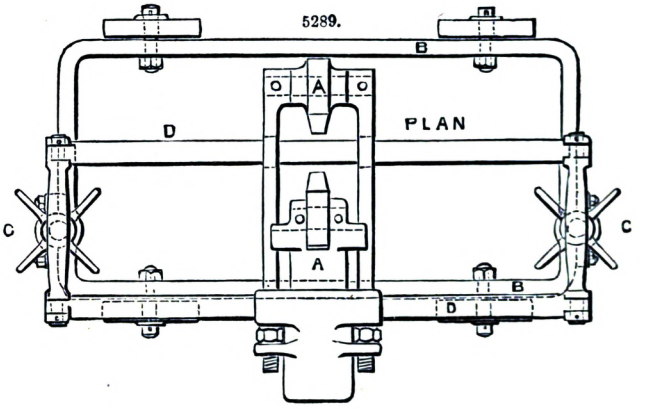

The weight of this machine varies from 2½ to 3 cwt. complete. Fig. 5286 is of another form of the portable riveter, without the cross-heads, the dies here being in line with the ram.

Figs. 5287 to 5289 illustrate the application of the portable riveter to riveting ships' keels. A is the machine which runs along two bars D D, supported on elevating and lowering screws C C, and the whole is carried by a wrought-iron bogey on four wheels. By properly adjusting screws C C, a whole row of rivets, about 7 to 8 ft. long, can be made, and the row below afterwards.

This machine is equally applicable to long girders, or any work too large to be brought to the machine.

Figs. 5290, 5291, show an arrangement of portable riveter for ships' frames. The system consists of a series of radial arms B, suspended from one communicator which contains a pipe from

5290.

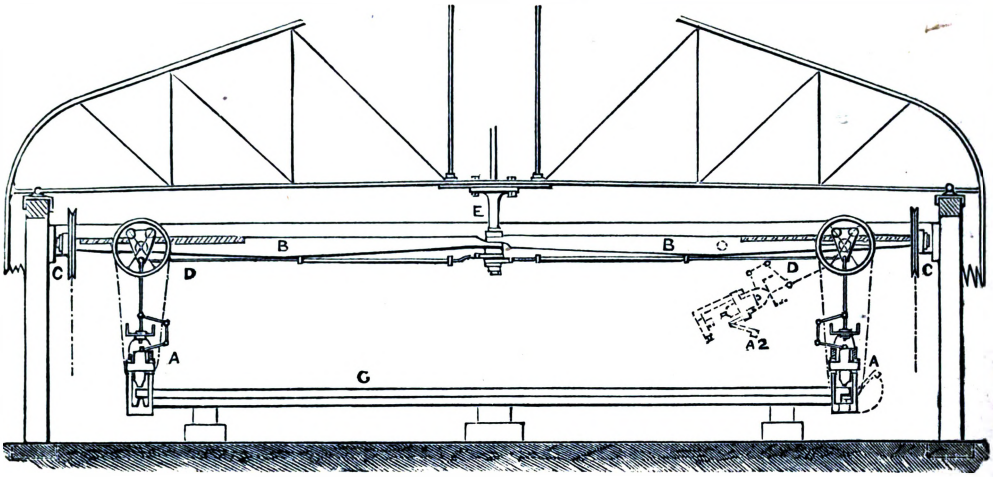

5291.

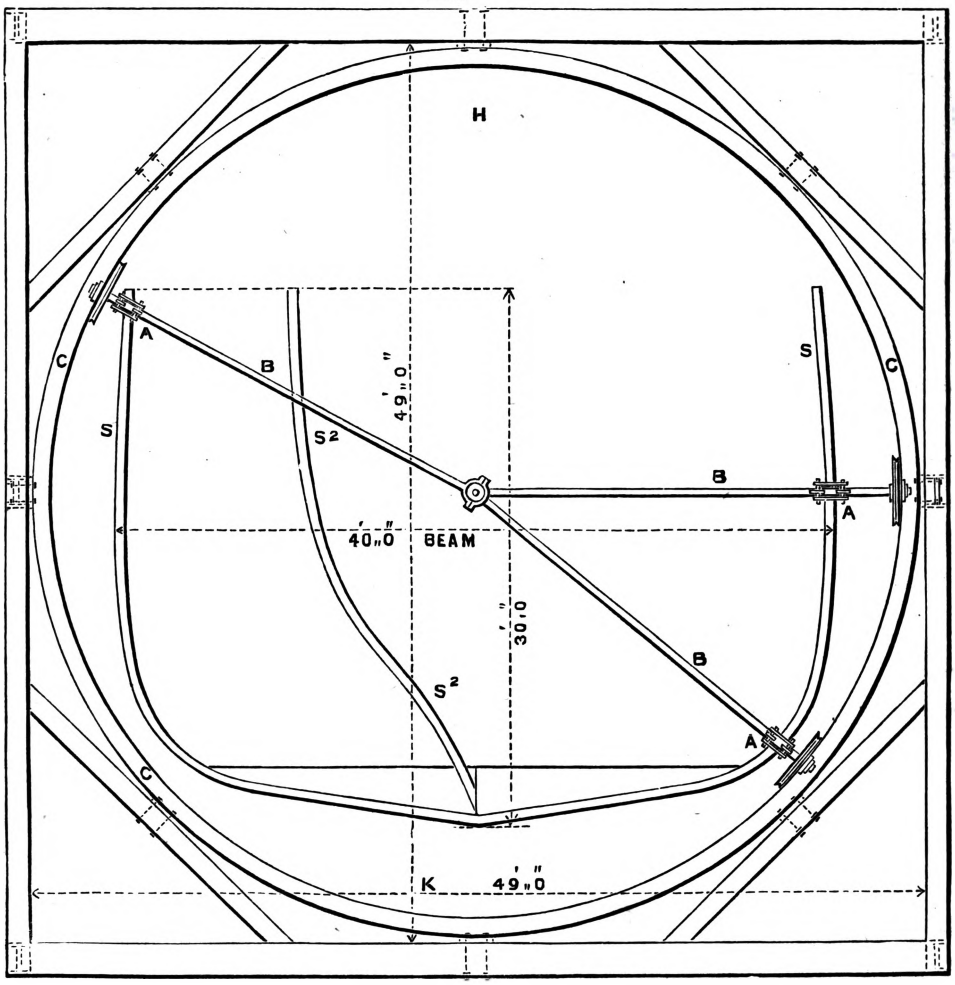

the accumulator E. These arms at their other extremity are supported on a circular rail C; it is evident that the portable machines *a a* suspended from these arms, and arranged by suitable rack and pinion, and telescopic pipes, can reach work placed anywhere within the circle of C. It

will thus be seen how they can quickly rivet up a frame, for instance, of an iron vessel, either of square section, as at S, or of finer section, as S_2. The frames would come in at H, and pass out finished at K at the head of a vessel being built.

For any description of work this system answers equally well, and any modification of crane may be used instead of the plan shown in the figures.

Universal joints are used in these portable machines. Fig. 5292 is a double right-angled joint, and Fig. 5293 a ball-and-socket joint adapted for the purpose.

5292.

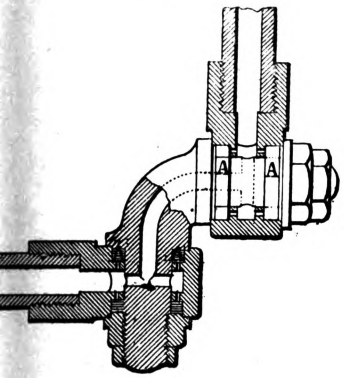

5293.

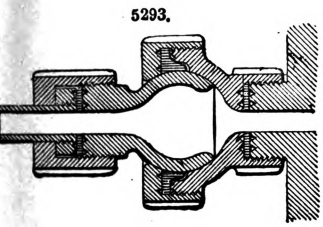

5294.

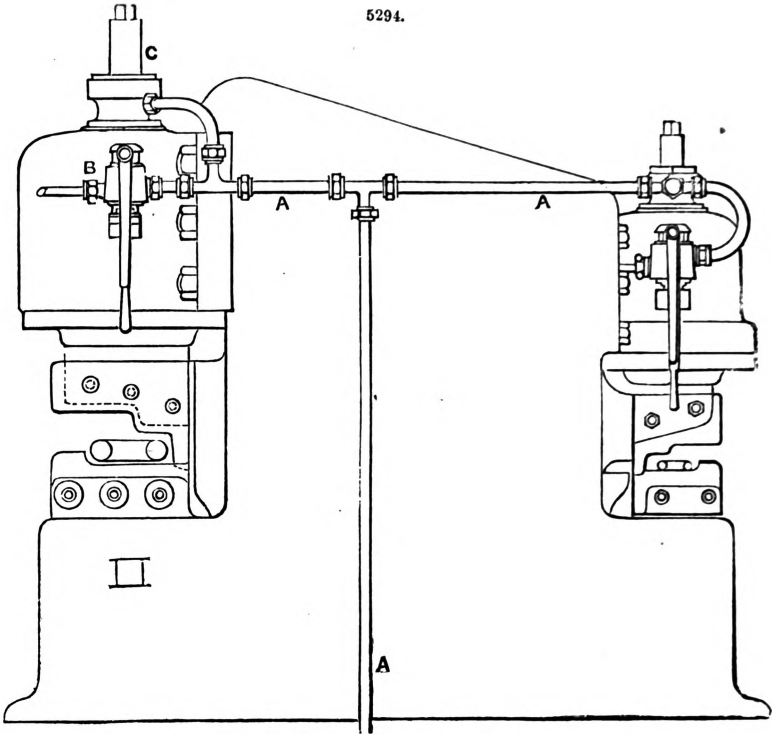

5295.

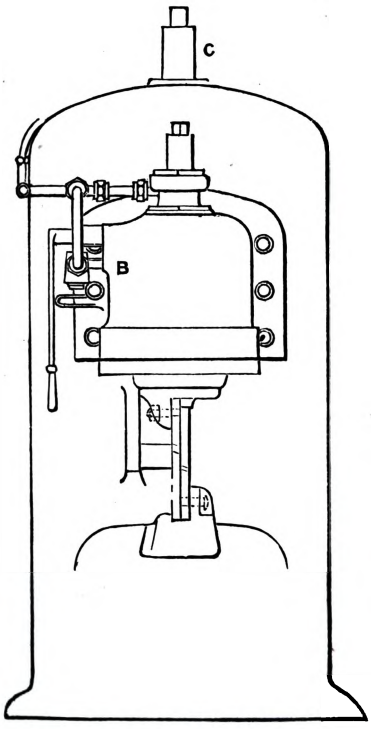

5296.

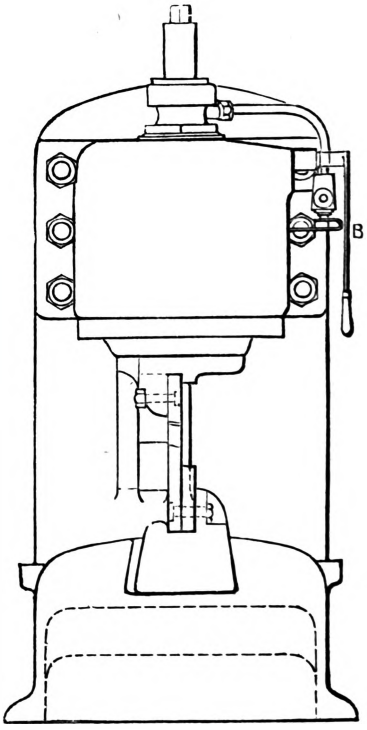

Figs. 5294 to 5296 are views of a hydraulic shearing machine for cutting cable chains. By a very simple modification the knives can be placed as in ordinary plate-shearing machines, and the other cylinder used as a punch. The machine is in some cases fitted to act as a horizontal riveter as well, and has another cylinder in the centre for angle-iron cutting, and bar straightening or bending. The cylinder arrangements are similar to those employed in the riveter already described. The water from accumulator enters at A, through a valve at B, and C acts as the draw-back or reversing motion.

5297.

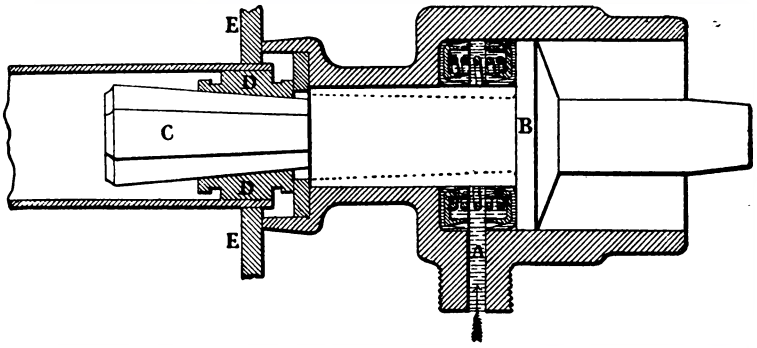

Fig. 5297 shows a hydraulic tube expander. The water is pumped in at A direct from a small hand-pump, and forces outwards the ram B, which draws the hexagonal wedge C through the dies D, thus expanding the tube in the hole in the tube-plate E. Upwards of sixty tube ends an hour can be finished by this tool, using a pressure of from $1\frac{1}{2}$ to $1\frac{3}{4}$ ton on the square inch.

See HAND-TOOLS. HYDRAULIC MACHINES.

MANDREL. FR., *Arbre d'un tour*; GER., *Drehbankspindel*; SPAN., *Mandril*.

A mandrel, or mandril, is a bar of metal inserted in the work to form it, or to hold it as in a lathe during the process of manufacture. Also the spindle which carries the centre chuck of a lathe and communicates motion to the work by a pulley; an arbor.

See HAND-TOOLS. MACHINE TOOLS.

MANGANESE. FR., *Manganèse*; GER., *Mangan, Braunstein*; ITAL., *Manganeso*; SPAN., *Manganesa*.

Metallic manganese is obtained by calcining its oxides with carbon, a carburet of manganese being produced by the operation. This substance, when fused with a small quantity of manganous carbonate, gives the pure metal. This metal is sufficiently brittle to be reduced to a powder by trituration. Its specific gravity is 8·013; and it is almost infusible. At 212° Fahr. it readily decomposes water. As it oxidizes rapidly on exposure to the atmosphere, it should be preserved in naphtha, or in sealed tubes. Its atomic weight is 57; molecular weight unknown. The quantities of manganese entering into combinations are sometimes one, sometimes two atoms. Compounds containing only one atom are called minimum compounds, and those containing two atoms are known as maximum compounds. The minimum compounds are rarely saturated; the manganese in them nearly always acts as a bivalent. It is only in the maximum compounds that the tetratomic character of the metal appears. In this case, two atoms together form a hexatomic group, which could not be, unless we admit for each atom a maximum capacity of saturation equal to four at least. Quite recently, however, Nicklès has shown that manganese forms a chloride corresponding to the formula $Mn\,Cl_4$. Previously, it was found impossible to isolate this chloride, on account of its great instability. It may be decomposed into protochloride and chloride.

$$\underset{\text{Tetrachloride of manganese.}}{Mn\,Cl_4} = \underset{\text{Dichloride of manganese.}}{Mn\,Cl_2} + \underset{\text{Chlorine.}}{\left.\begin{matrix}Cl\\Cl\end{matrix}\right\}}$$

Nicklès succeeded in rendering it stable by combining it with the others. This chloride is produced and immediately destroyed when binoxide of manganese is acted upon by hydrochloric acid.

$$\underset{\text{Binoxide of manganese.}}{Mn\,\Theta_2} + \underset{\text{Hydrochloric acid.}}{4\left(\begin{matrix}H\\Cl\end{matrix}\right\}\right)} = \underset{\text{Water.}}{2\left(\begin{matrix}H\\H\end{matrix}\right\}\Theta\right)} + \underset{\text{Tetrachloride of manganese.}}{Mn\,Cl_4}$$

The existence of tetrachloride of manganese places the tetratomic character of this metal beyond a doubt.

The compounds of manganese with the monatomic radicals correspond therefore to one of the formulæ $Mn\,R_2$, Mn_2, R_6, or more rarely $Mn\,R_4$. The diatomic radicals also combine with manganese; the compounds correspond to the general formula $Mn\,R$ when they are minimum, and to the formula $Mn_2\,R_3$ when they are maximum. But besides this, and in consequence of the property possessed by the diatomic radicals of accumulating in indefinite numbers in the molecules, these radicals are capable of combining with manganese in proportions greatly superior in number to the two of which we have just been speaking. Thus four oxides of manganese are known—the protoxide $Mn\,\Theta$, the sesquioxide Mn_2, Θ_3, the red oxide $Mn_3\,\Theta_4$, and the binoxide $Mn\,\Theta_2$. Besides these,

two saline kinds are known, the manganates $Mn R_2 \Theta_4$, and the permanganates $Mn R \Theta_4$. The anhydride corresponding to manganic acid would be $Mn \Theta_3$, and the anhydride corresponding to permanganic acid $Mn_2 \Theta_7$. These two anhydrides are unknown; nor is the manganic acid $Mn H_2 \Theta_4$ known; but, on the other hand, the permanganic acid $Mn H \Theta_4$ has been obtained dissolved in water, and it seems capable of existing in the solid state.

The protoxide is a basic anhydride; it dissolves in the acids, and forms minimum salts. It is obtained by causing a current of dry hydrogen to pass over binoxide slightly heated. The usual method of heating the binoxide is to place it in a proper vessel, and to fix it over a spirit lamp. Thus prepared, it will bear exposure to the atmosphere. A hydrate of manganese may be obtained by precipitating by an alkali a soluble minimum salt. This hydrate, when exposed to the air, becomes converted into a maximum hydrate.

The anhydrous sesquioxide is prepared by slightly calcining nitrate of manganese. This is a weak basic anhydride. When dissolved in the acids, it gives red and very unstable maximum salts; the sulphate, however, acquires stability in the presence of the alkaline sulphates with which it combines, forming salts that crystallize in the cubic system with twenty-four molecules of water. The double salt obtained with sulphate of potash should be expressed thus;—

$$\left.\begin{matrix} Mn_2 \\ (S\Theta_2)^3 \end{matrix}\right\} \Theta_6, \left.\begin{matrix} S\Theta_2 \\ K_2 \end{matrix}\right\} \Theta_2 + 24 \text{ aq.}$$

These salts, being isomorphous with those of alumina, have, from this circumstance, received the name of manganic salts of alumina.

The red oxide may be written $\left.\begin{matrix} Mn_2 \\ Mn \end{matrix}\right\} \Theta_4$. This compound is then considered as containing the manganese at the maximum and the minimum at the same time. It occurs native in *hausmannite*, and may be obtained artificially by igniting the sesquioxide or the binoxide in the open air. It is a compound of these two oxides.

The binoxide, $Mn \Theta_2$, exists in a native state, and constitutes by far the most abundant of the manganese ores. When heated with hydrochloric acid, it produces water and manganic tetrachloride, the latter of which is destroyed as soon as formed, by liberating chlorine; at the same time protochloride is produced. The solution of this chloride, when subjected to the action of an alkaline carbonate, gives a precipitate of carbonate of manganese, by the aid of which all the minimum salts of this metal may be prepared.

Manganate of potash, $Mn K_2 \Theta_4$, is obtained by fusing together hydrated potash and binoxide of manganese, in contact with the air, or, better, by calcining binoxide of manganese with a substance capable of giving up potassium and oxygen, as nitrate of potassium. Manganate of potash is green. Alkaline water dissolves it without producing any change in its constituent parts, but pure water, or, better still, water to which a small quantity of nitric acid has been added, converts it into a mixture of hydrated peroxide of manganese and permanganate of potash.

$$\underset{\text{Manganate of potassium.}}{3\,Mn K_2 \Theta_4} + \underset{\text{Water.}}{2\,H_2O} = \underset{\text{Binoxide of manganese.}}{Mn \Theta_2} + \underset{\text{Permanganate of potassium.}}{2\,Mn K \Theta_4} + \underset{\text{Potash.}}{4\left(\begin{matrix} K \\ H \end{matrix}\right\} \Theta)}$$

When the solution of potassic manganate is exposed to the air, the carbonic anhydride produces slowly the reaction of which we have just spoken, and as the colours of manganate and permanganate of potash are very different, a great variety of hues are produced, and from this circumstance this substance was formerly called the *mineral chameleon*.

Permanganate of potash is obtained by the calcination of a mixture of peroxide of manganese, hydrate of potassium, and chlorate of potash. When the solution is filtered upon amianthus, and then evaporated in a porcelain vessel, crystals of permanganate of potash are thrown down, corresponding to the formula $Mn K \Theta_4$. Permanganates of potash with saline solutions of the metals give precipitates. Permanganate of baryta, thus prepared by double decomposition, gives off permanganic acid when acted upon by diluted sulphuric acid.

$$\underset{\text{Permanganate of baryta.}}{(Mn \Theta_4)^2 Ba} + \underset{\text{Sulphuric acid.}}{S \Theta_4 H_2} = \underset{\text{Sulphate of baryta.}}{S\Theta_4 Ba} + \underset{\text{Permanganic acid.}}{2\,Mn \Theta_4 H}$$

Under the influence of potash the permanganates are converted into manganates;—

$$\underset{\text{Permanganate of potash.}}{4\,Mn K\Theta_4} + \underset{\text{Potash.}}{4\left(\begin{matrix} K \\ H \end{matrix}\right\} \Theta)} = \underset{\text{Manganate of potash.}}{4\,Mn K_2 \Theta_4} + \underset{\text{Water.}}{2\,H_2\Theta} + \underset{\text{Oxygen.}}{\left.\begin{matrix} \Theta \\ \Theta \end{matrix}\right\}}$$

The permanganates of potassium, sodium, barium, strontium, and silver, are isomorphous with the perchlorates of the same metals. The soluble permanganates affect a beautiful violet colour.

Reactions of the Salts of Manganese.—The salts of manganese may be recognized by the following characteristics;—

1. They are rose-coloured, and become white when dried.
2. When heated upon a piece of platina with potash in the oxidizing flame of the blow-pipe, they give a green mass of alkaline manganate.
3. When boiled with a mixture of binoxide of lead and nitric acid, they give a liquor which is coloured violet by permanganic acid. This reaction is very sensible.
4. Potash and soda produce in them a white precipitate, which becomes rapidly discoloured on exposure to the air.
5. The soluble alkaline sulphurets determine in them the formation of a flesh-coloured pre-

cipitate of hydrated sulphuret of manganese. This precipitate will dissolve cold in weak hydrochloric acid.

Manganese is not easily produced by itself; it is extremely refractory, and has a strong affinity for oxygen. It may be produced by mixing one of its oxides with lamp-black and oil, and exposing it to the strongest heat in a coal-lined crucible. The metal thus obtained is not pure, it contains carbon. Manganese metal is soft and brittle; its sp. gr. is 7 or 8; it is very oxidizable, but slowly in cold, although rapidly in warm water, or acid water. It resembles iron, cobalt, and nickel, very much, and combines with these easily; which may be caused not so much by affinity as a similarity in properties—particularly in their relation to heat, and melting. On the other hand, it resembles very much the alkaline metals; and in respect to forming slag, the most important office it performs for the metallurgist, it ought to be classed with the alkalies. It does not occur native.

Ores.—There is but one ore of manganese which is of practical use to the metallurgist; and that is the binoxide, or black manganese. This is a black-brown, shining substance—amorphous—and contains, when pure, 63·6 per cent. of metal. The most valuable kind of this mineral is the crystallized variety, called grey manganese—pyrolusite. These ores are generally adulterated with iron, alumina, and quartz, and contain water; sp. gr. 4·8 to 4·88.

Alloys.—The only use made of manganese is in an alloy with other metals, particularly iron; and as it has a peculiar affinity for that metal, we observe it in most iron ores, and consequently in crude iron. It combines readily with phosphorus, carbon, or silicon, and forms with the latter substance an alloy which resists the attacks of aquafortis successfully. We may here observe that it is not the relation which the elements of an alloy bear to oxygen which causes it to resist the attacks of acids, but the compactness of the metal. Manganese is as oxidizable almost as potassium, and silicon is easily attacked by oxygen. A compound of the two is as durable as gold, and is not touched by the strongest acids. Manganese melts with all other metals, and causes hardness. It imparts to iron whiteness, and causes it to become hard and brittle. It is found in very small quantities in good steel, not often in wrought iron. A little iron in manganese improves its resistance to the attacks of oxygen, and causes it to be magnetic. We do not know if it may be combined with zinc, antimony, or lead, but suppose so, if the operation is performed under proper conditions.

Manganese is very refractory, and has a strong affinity for oxygen; its protoxide forms one of the most powerful bases in silicates with which we are acquainted—in fact, it cannot be reduced in the presence of silex. As the formation of slags is all-important in metallurgy, manganese becomes—if not as a metal, as an oxide—one of the most useful substances in smelting operations.

See SPIEGELEISEN. STEEL.

MANSARD ROOF. FR., *Comble à la mansard;* GER., *Mansardendach;* SPAN., *Armadura á la mansarda.*

See ROOFS.

MARINE ENGINE. FR., *Machine à vapeur marine;* GER., *Schiffsdampfmaschine;* ITAL., *macchina marina;* SPAN., *Máquina marina.*

Marine engines were first introduced in the year 1828, and amongst the early machinists Fulton, Miller, Penn, and Rennie may be mentioned as having been the most instrumental in bringing the arrangement to its present state. The illustration, Fig. 5298, represents the end elevation of the modern oscillating paddle-wheel engines, fitted by Ravenhill, Salkield and Co., in H.M. ships Helicon and Salamis. The air and feed pumps are shown in section to illustrate the relative positions of the suction and discharge valves, and the points from which the motion is obtained; this for the feed-pumps is from an arm secured to the cylinder, and for the air-pump from a crank-pin formed with the intermediate shaft. The front and sectional elevations are shown by Fig. 5299. The sectional part shows the cylinder, steam-pipe, entablature, disengaging disc, connecting rod, and crank in section. The complete part, the air-chamber, starting gear, hand-rail, platform, and bilge-pump pipes, valve-casings, expansion-gear, trunnions, steam-pipe, entablature, and cylinder cover and connecting-rod head. Fig. 5300, the plan in sectional and complete views of the same number of details as before. Fig. 5301, the cross stay-frames, columns, expansion-cam, and gear, steam branch-pipe, pumps, and lower frame, and the entablature, disengaging disc, and hand steam-valve gear. Fig. 5302 illustrates the starting gear, which is of the balance eccentric class, with the sliding quadrant levers and single-ported slide-valves. The action of this gear is such that, when in the position shown, the hand-wheel is disengaged and the valves are worked by the eccentric; but on pushing the eccentric-rod off the quadrant-pin by the hand-lever above the wheel, the valves are motionless, and can be then hand-worked by pushing the hand-wheel pinion in gear with the quadrant-rack.

Fig. 5303 gives four views of the cylinder, which is in one casting, and arranged for two slide-valves—one on each side of the inside trunnion bearing, for balancing. Fig. 5304, two views of the cylinder cover, gland and stuffing box fitted with a deep wearing-bush. Fig. 5305 shows the piston in two sectional views, the packing used behind the spring-ring is the usual gasket.

Fig. 5306, the slide-valve casing; it is shown by three views, and the main feature in it is the passage in the frame and cover that communicates the back of the slide-valve with the condenser, so as to take away any back pressure of steam as well as the steam pressure from the face.

Fig. 5307 illustrates the slide-valve, which is an ordinary single-ported valve, packed at the back with a six-bar spring, that presses a ring against the casing cover, and thereby prevents the steam from acting on the back of the valve.

Fig. 5308 is the elevation of the starting or reversing gear, and shows the eccentric-rod in connection with the sliding quadrant.

Fig. 5309, the plan of the starting wheel, shaft, bracket, hand-lever, and box-spring.

Fig. 5310, a sectional plan of the reversing gear in connection with the cylinder, and shows the levers and sliding quadrant with their pins.

5298.

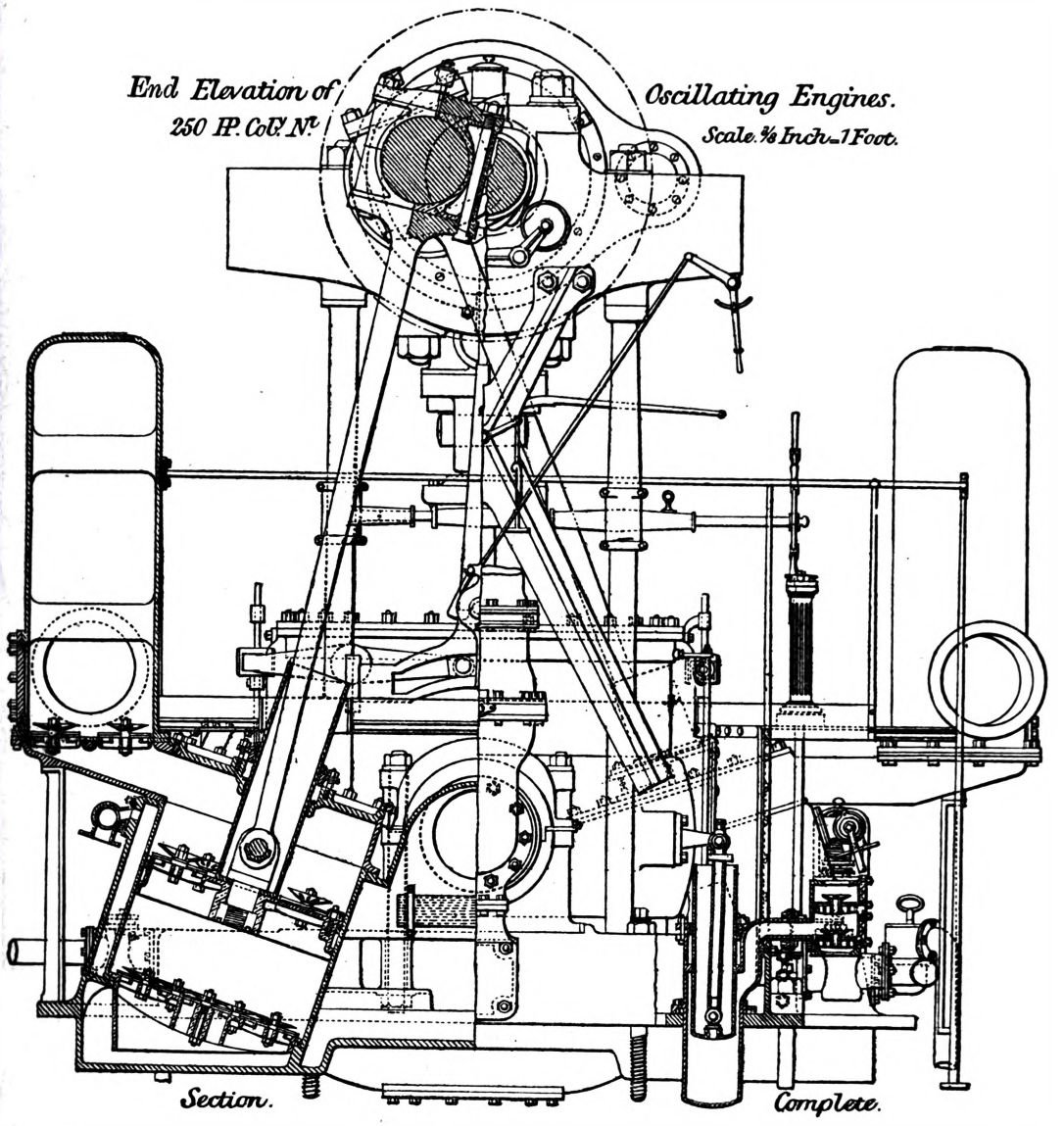

Fig. 5311 is of a set of details of the eccentric-rod lever and pin; and Fig. 5312 are the levers for working the slide-valves.

Fig. 5313, the details of the valve-rods and pins; and Fig. 5314 is the guide for each rod.

Fig. 5315, the details and working-gear sweep, also called the sliding quadrant.

Fig. 5316, the starting rack that is secured to the quadrant; and Fig. 5317, the bracket that supports the starting shaft.

Fig. 5318 illustrates that shaft, also the wing and midship columns.

Fig. 5319, details of the eccentric and counterbalance or balance-weight, as well as the eccentric-band.

Fig. 5320, the expansion-gear, side frame, and valve-casing, and bracket to which it is connected.

Fig. 5321, the carriage cam-wheel and grade-pin; and Fig. 5322, the expansion-rods and release-lever in connection with the release-rod shown to the right of the same figure.

Figs. 5323, 5324, illustrate the spring-boxes for the eccentric-rod and the cam-rod.

Fig. 5325, the expansion-valve and casing; Fig. 5326, the lever for the valve-spindle; and Fig. 5327, the gear-brackets and sweep-block.

Fig. 5328, two views of the expansion-valve casings and bracket.

Fig. 5329, the stop-throttle valve and seat; and Fig. 5330, the steam throttle-valve gear.

Fig. 5331 illustrates the arrangement of the air-pumps and condenser in sectional and complete views, also showing the connecting rods in a similar manner.

Fig. 5332 shows three views sectional and complete of the condenser alone, and also the passages, projections, and openings requisite according to the arrangement of the engine.

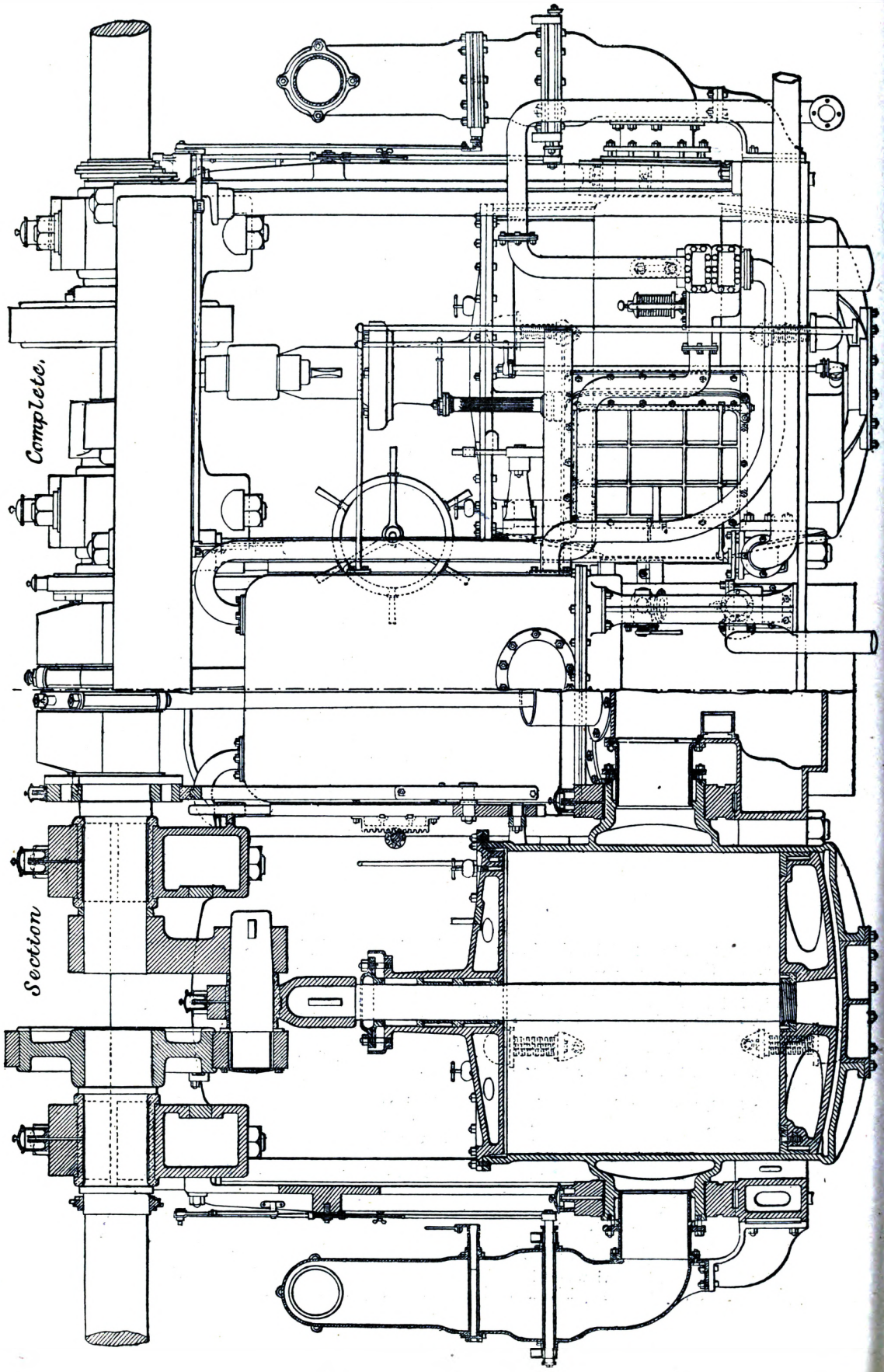
Complete.
Section
5239.
Front Elevation.

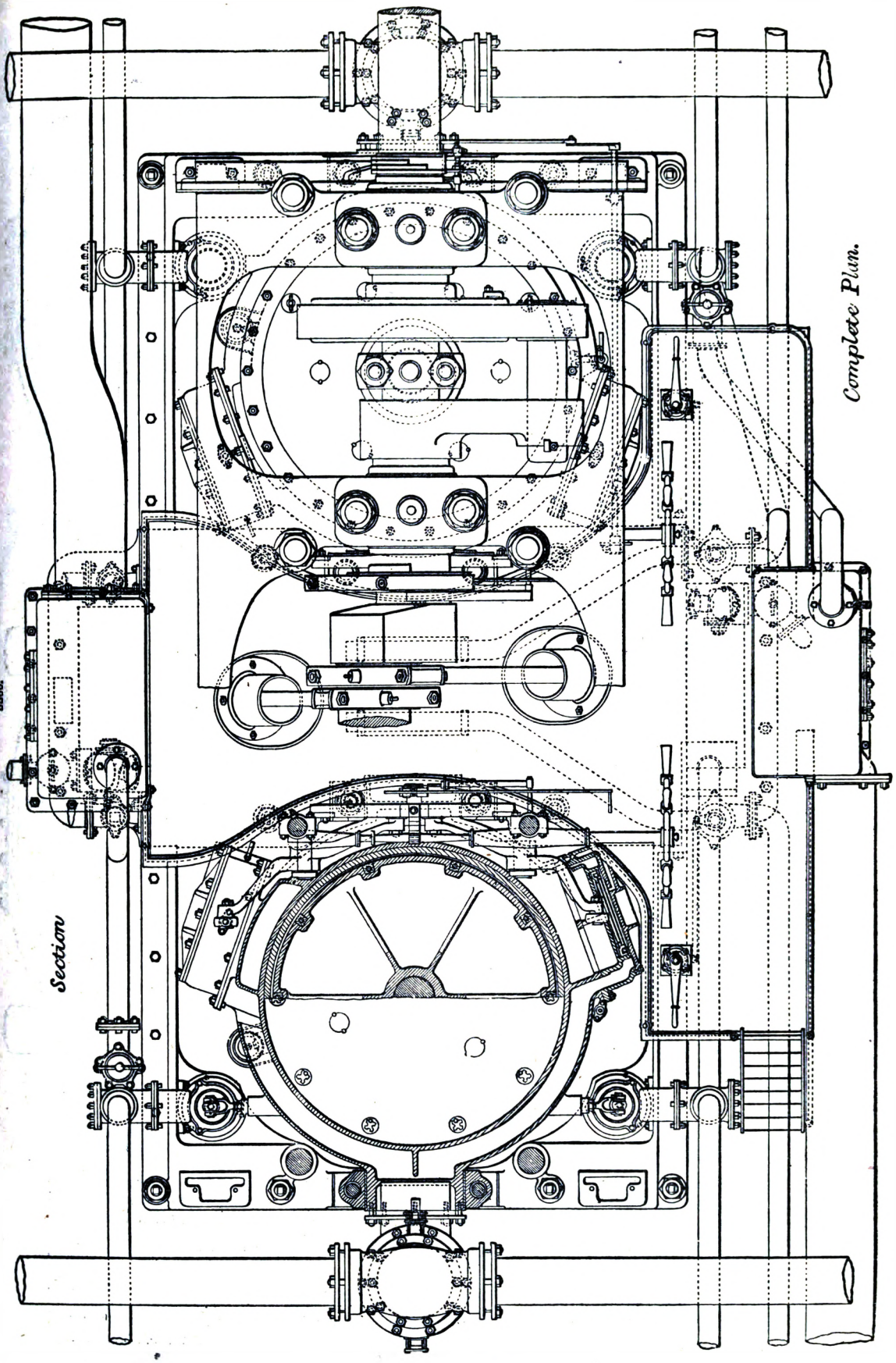
Section
Complete Plan.
Sectional Plan.
5300.

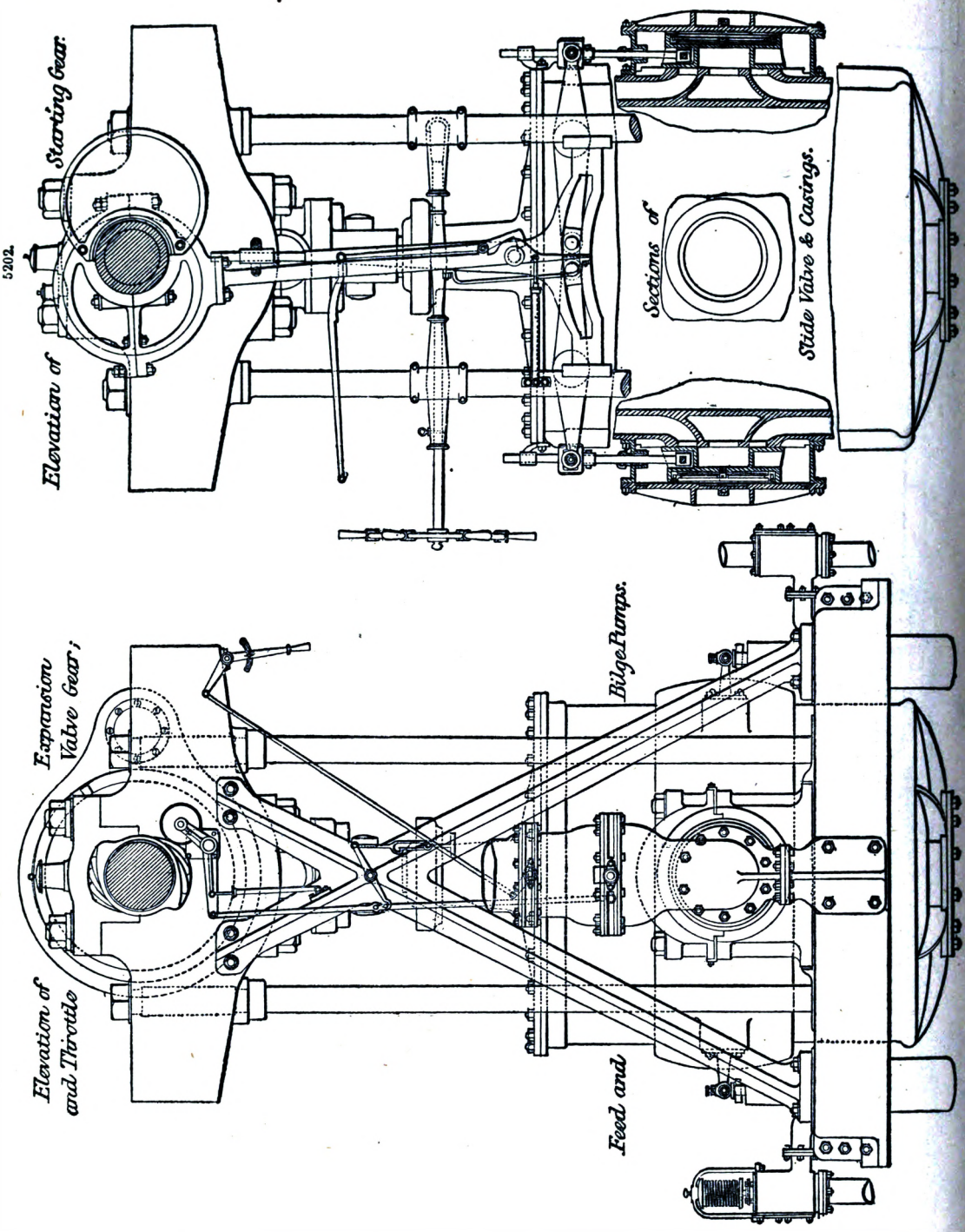

Fig. 5333 is a sectional elevation and plan of the branch piece that forms the discharge passage and the seating flange of the discharge-valve plate and air-chamber. Fig. 5334 is a section and plan of that plate and valves; and Fig. 5335, the air-chamber that covers them, often termed the hot-water cistern.

Fig. 5336, the suction or foot-valves and seat; and Fig. 5337, the piston and valves, sometimes termed the air-pump bucket.

Fig. 5338, the air-pump, trunk, and rod's connection; and Fig. 5339, the connecting rod, crank, end head, cap, bolts and nuts.

Fig. 5340, the sea injection-cock, to admit water into the condenser to condense the steam; and Fig. 5341 is the gear used for regulating the admission. Fig. 5342, the kingston-valve and casing, that admits the sea-water through the ship's bottom to the injection-cock.

5303.

Cylinder.

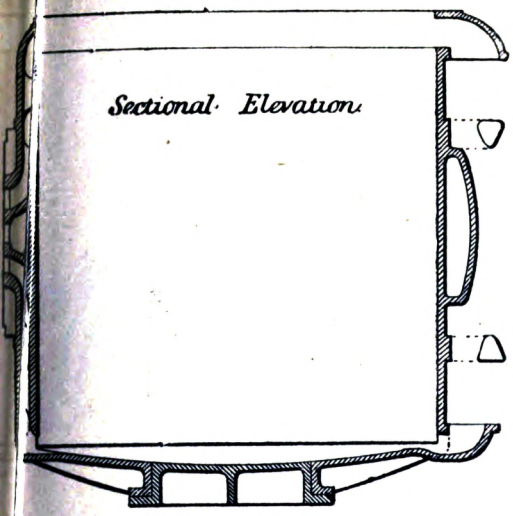

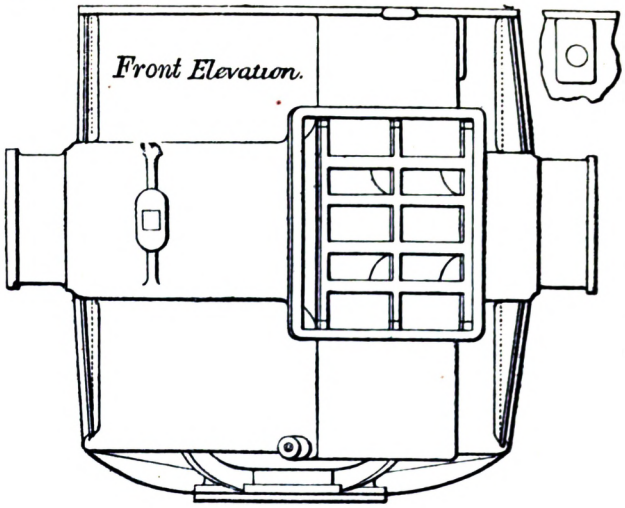

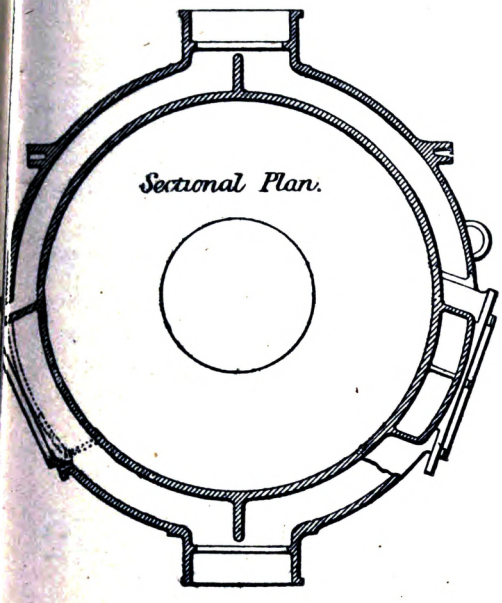

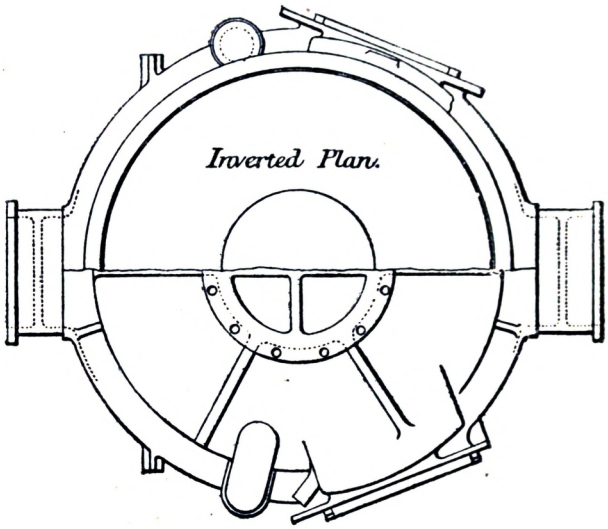

5304.

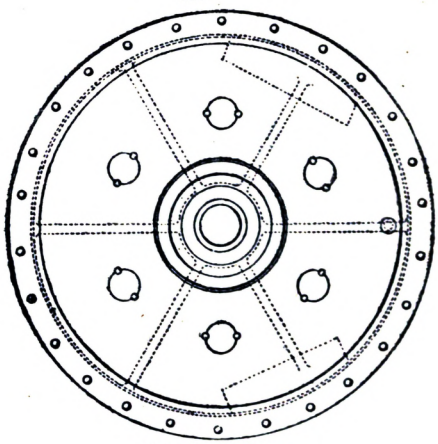

Cylinder Cover.

5305.

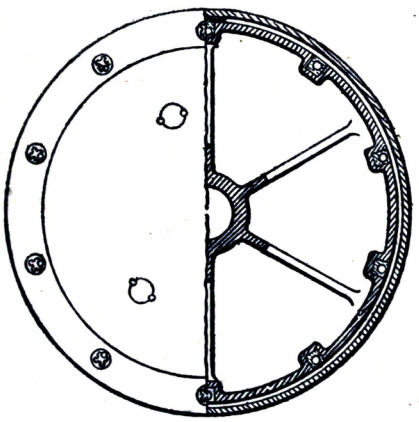

PISTON.

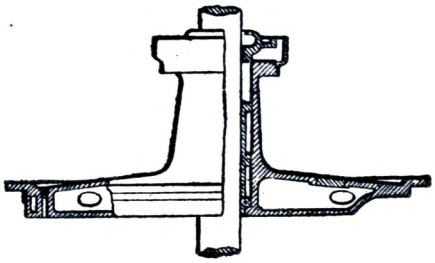

5306.

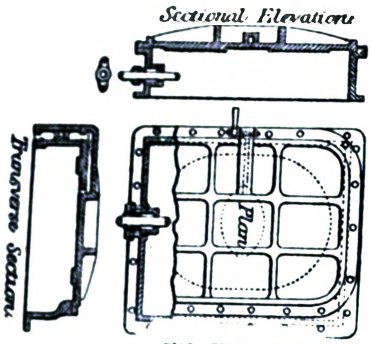

Slide Valve Casing.

5307.

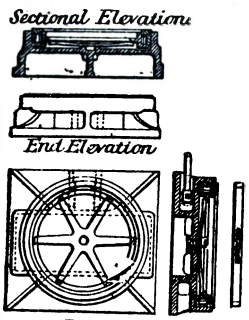

Slide Valve.

5308.

ELEVATION OF REVERSING GEAR.

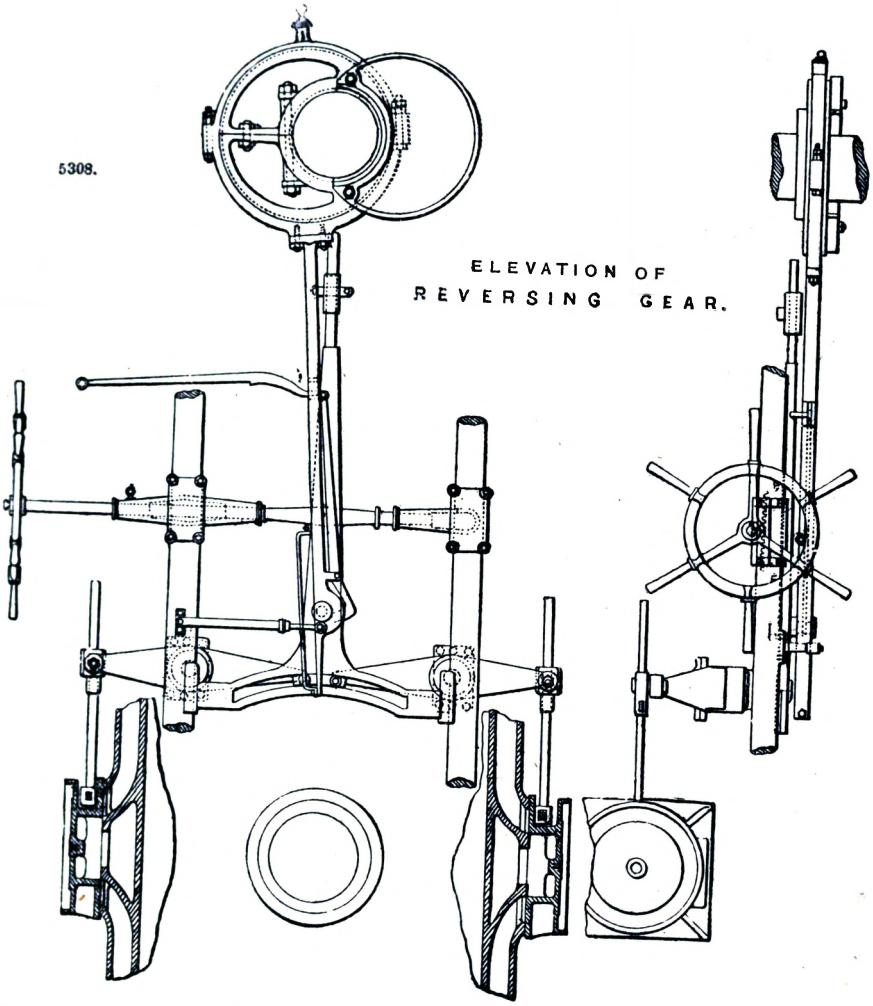

5309.

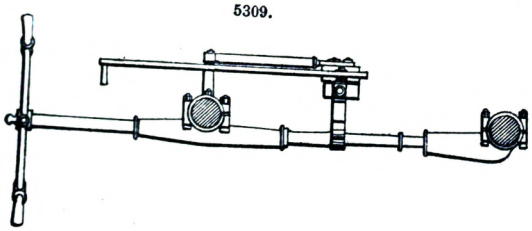

5310.

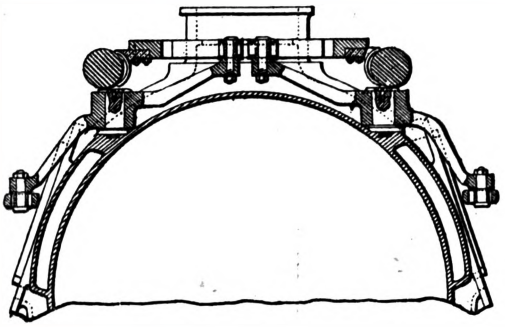

Sectional Plan of Reversing Gear.

5315.

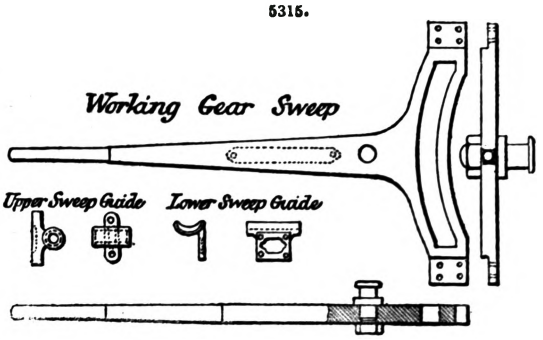

5316.

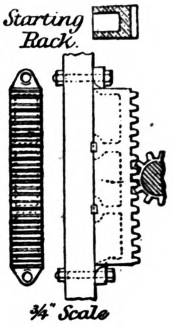

5311.

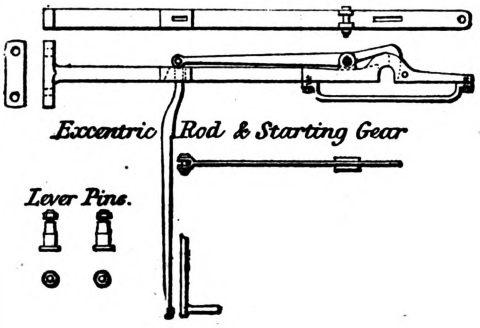

5317.

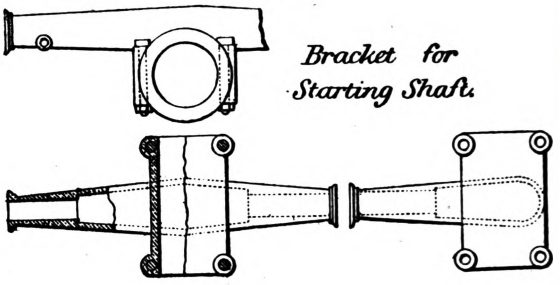

5312.

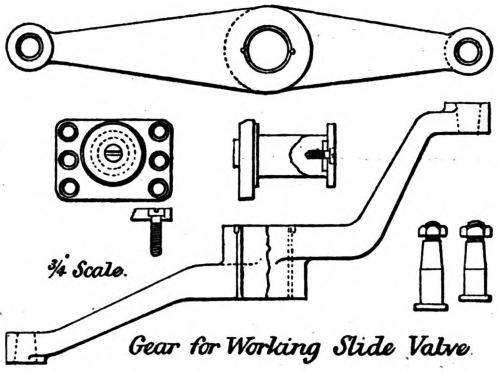

5318.

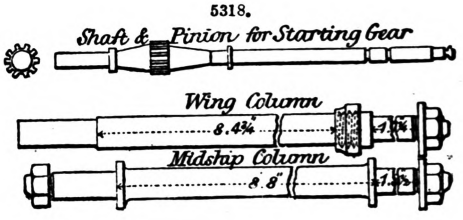

5313.

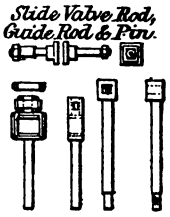

5314.

5319.

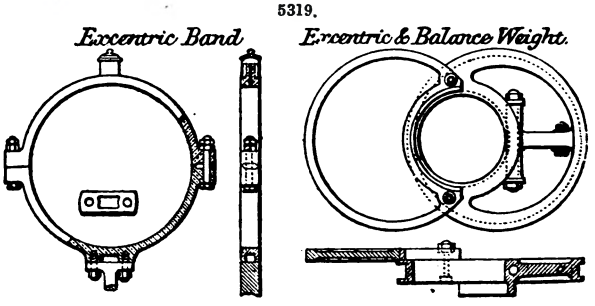

5320.

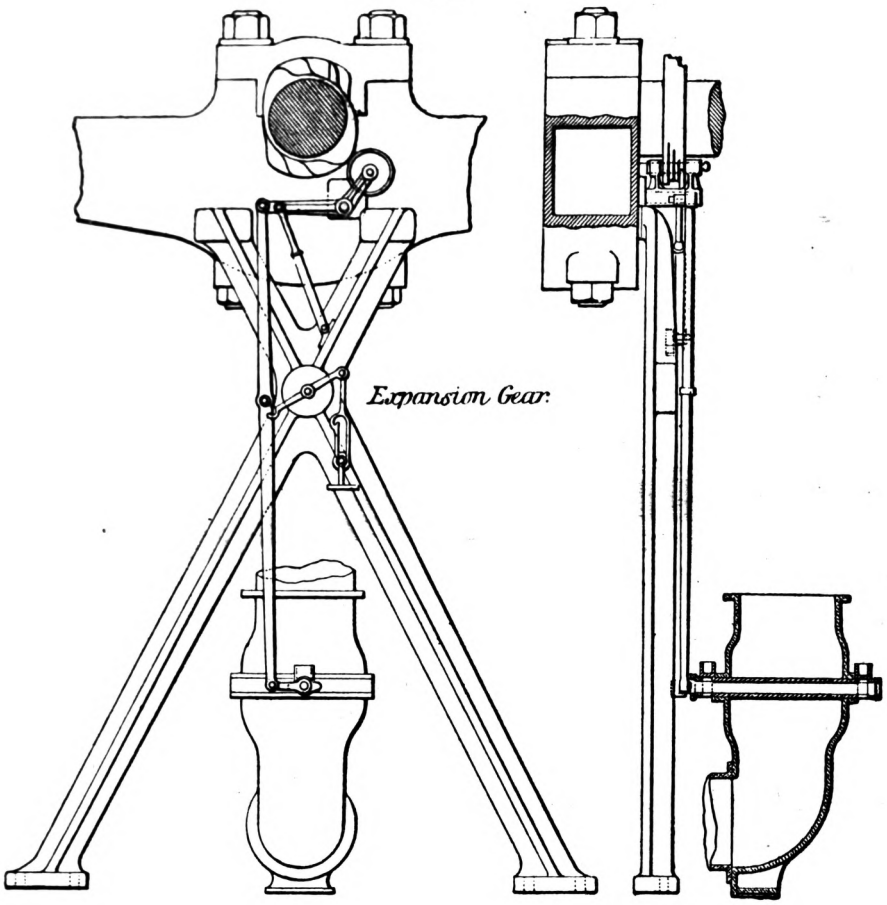

5321.

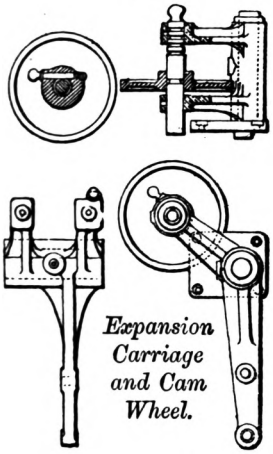

5322.

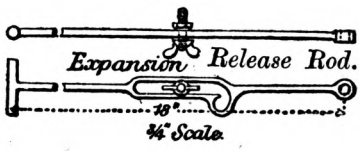

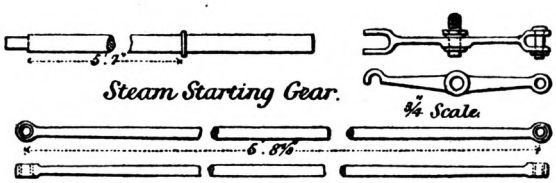

Expansion Rods and Lever.

5323

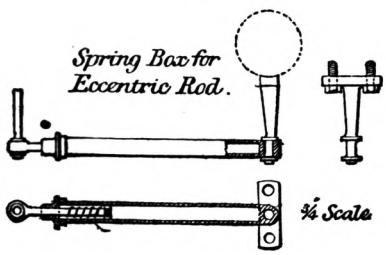

5324.

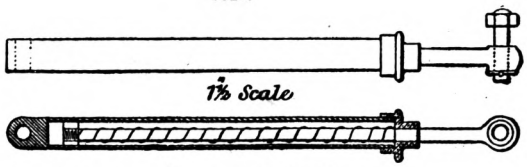

Expansion Spring Box.

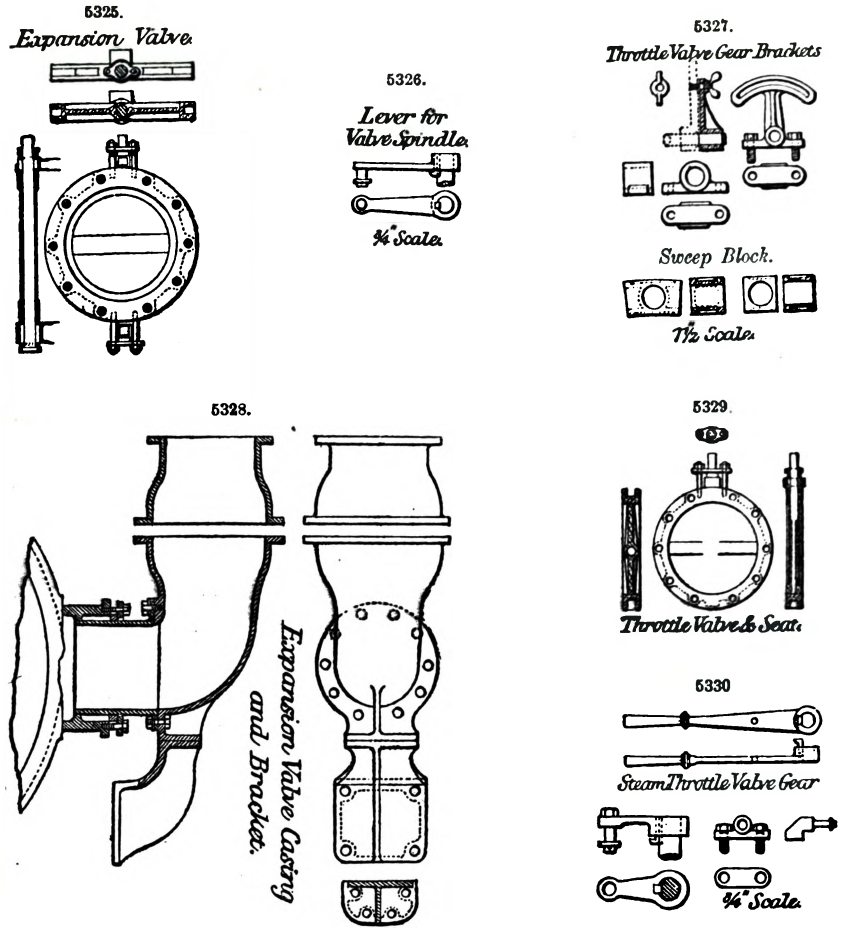

Fig. 5343 is the bilge injection-cock, and is used when open to admit water from the bilge into the condenser, whence it is pumped by the air-pump overboard, through the valve-casing, shown by Fig. 5344, which is also the main discharge-valve.

Fig. 5345 is the lower blow-out valve, or snifting valve, used for the purpose of emptying the condenser before starting the engines.

Fig. 5346, the feed or bilge pump, and casing; Fig. 5347, the plunger, and rod's connection with the same.

Fig. 5348, the bilge-water discharge-valve and casing, that is secured at the ship's side, and level above the water line with the main discharge-casing.

Fig. 5349, half of the foundation frame in sectional and complete views. The holes for the trunnion-bolts, columns, side or cross-frame bolts, and holding-down bolts are all shown, also the recesses for the feed and bilge pumps. Fig. 5350 is the cylinder trunnion-block, that is secured in the condenser and foundation frame.

Fig. 5351 represents the cross frame that supports the entablature or main top frame, and Fig. 5352 shows another support is used for the hot-water cistern.

Fig 5353, the entablature that supports the intermediate shaft and the ship ends of the paddle-shafts.

Fig. 5354, the paddle-shaft and the intermediate shaft. The piston-rod is illustrated by Fig. 5355, and the piston-rod cap, bolts, nuts, and brasses by Fig. 5356.

The main crank is shown by Fig. 5357, and the disengaging disc by Fig. 5358. This being arranged so that by withdrawing the two cross keys, the crank-pin band can run free on the disc, when the paddle-wheels can revolve free from the engines—this is necessary when the ship is sailing.

Fig. 5359, the plan and elevations of the starting platform; Fig. 5360, the hand-rails and stanchions; Fig. 5361, the hand-rail support brackets.

Fig. 5362, feed and bilge pipe required for these engines; and Fig. 5363, the branch steam-pipe, with stuffing-box expansion-joints; Fig. 5364, safety-valve gear.

The feathering paddle-wheels of these engines are well arranged, as the Fig. 5365 illustrates by two views. The centre piece is shown by Fig. 5366. The arms, bolts, and nuts, by Fig. 5367. The radius and driving rods by Fig. 5368, and the cross stay-bolts and nuts by Fig. 5369.

See Boilers. Screw Engines.

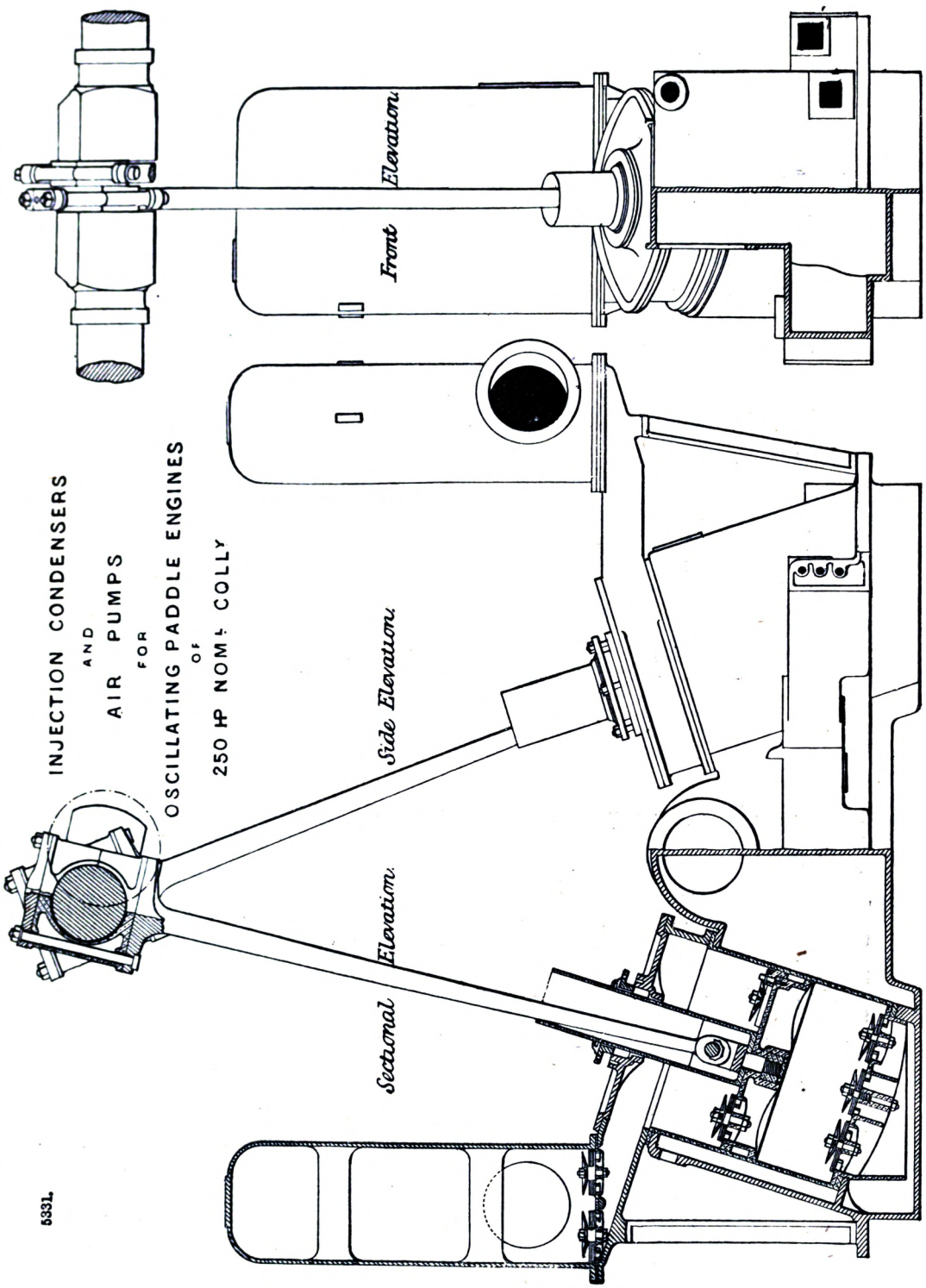
INJECTION CONDENSERS
AND
AIR PUMPS
FOR
OSCILLATING PADDLE ENGINES
OF
250 HP NOM.L COLLY
Front Elevation
Side Elevation
Sectional Elevation
5331.

5332.

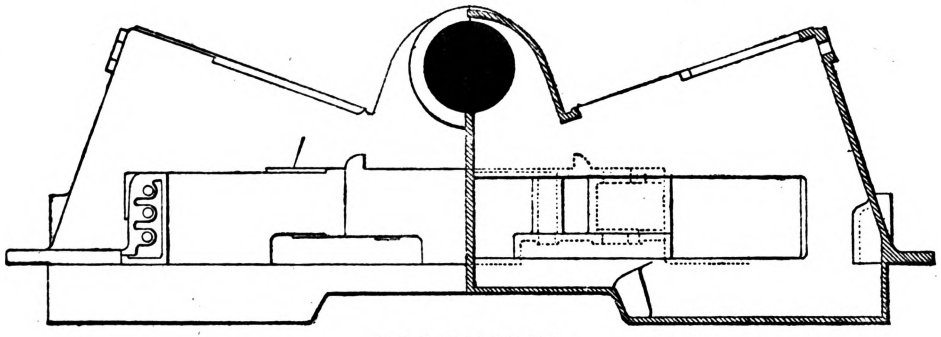

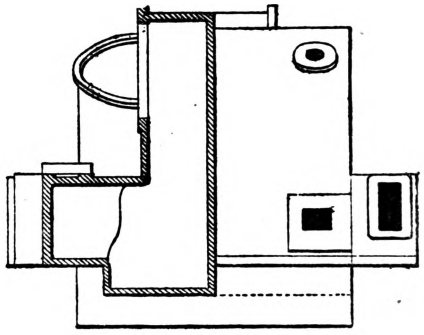

CONDENSER.

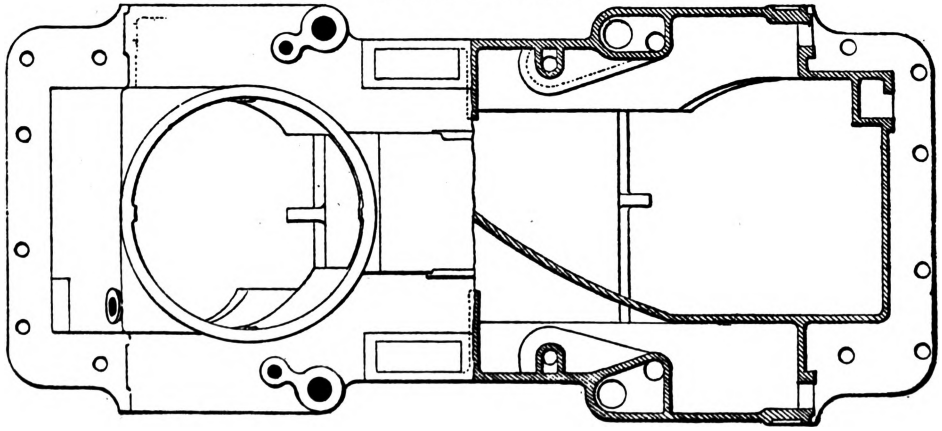

5333.

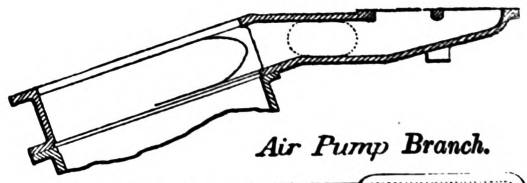

Air Pump Branch.

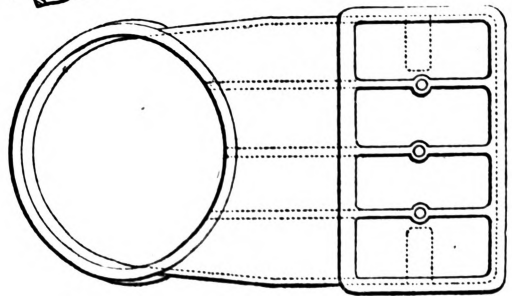

5334.

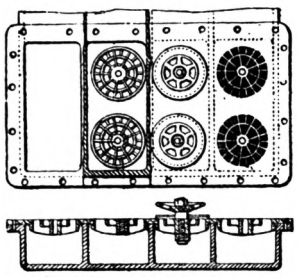

Delivery Valve Seat.

5336.

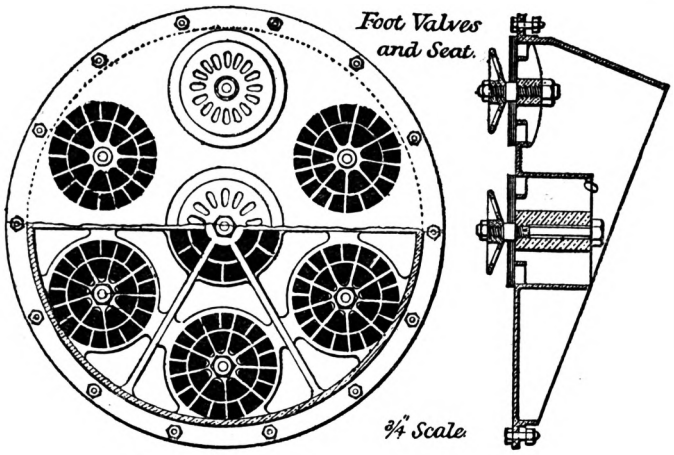

Foot Valves and Seat.

¾" Scale.

5335.

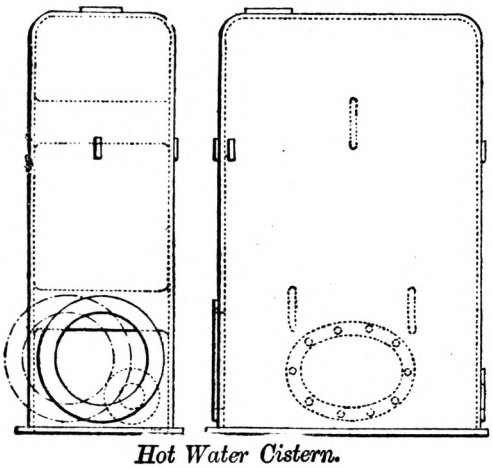

Hot Water Cistern.

5337.

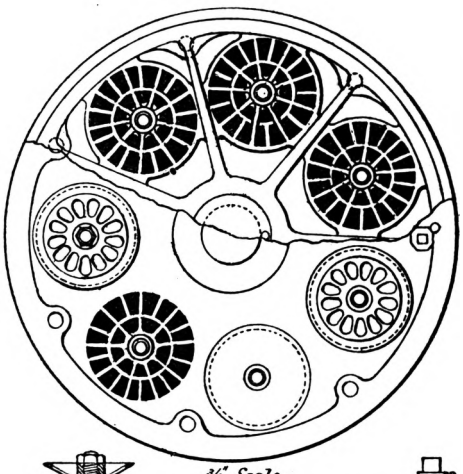

¾" Scale.

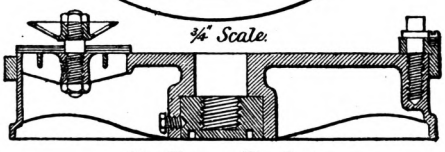

Air Pump Bucket.

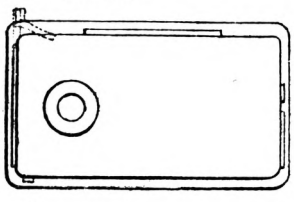

5338.

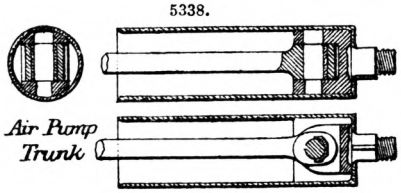

Air Pump Trunk

5339.

Air Pump Connecting Rod Head.

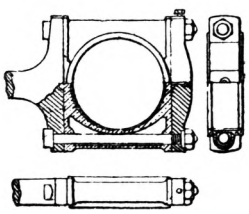

5340.

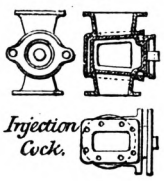

Injection Cock.

5342.

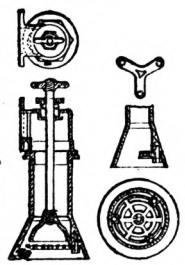

Kingston Valve.

5341.

Injection Gear.

5343.

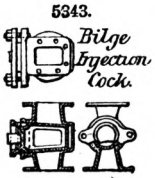

Bilge Injection Cock.

5344.

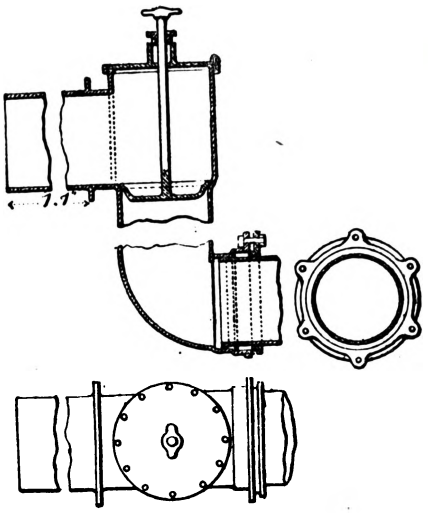

Main Discharge Valve.

5345.

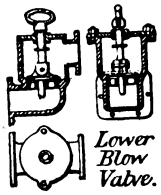

Lower Blow Valve.

5346.

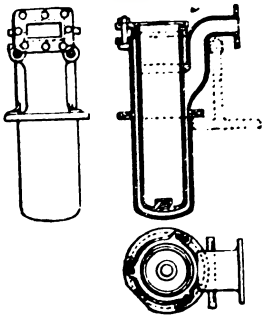

5347.

Plunger and Rods for Working Feed & Bilge Pumps.

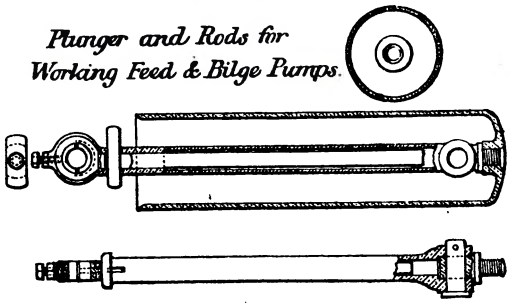

Levers for Feed & Bilge Pumps.

5348.

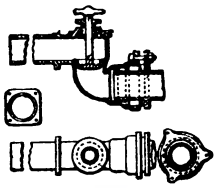

Bilge Discharge Valve.

5349.

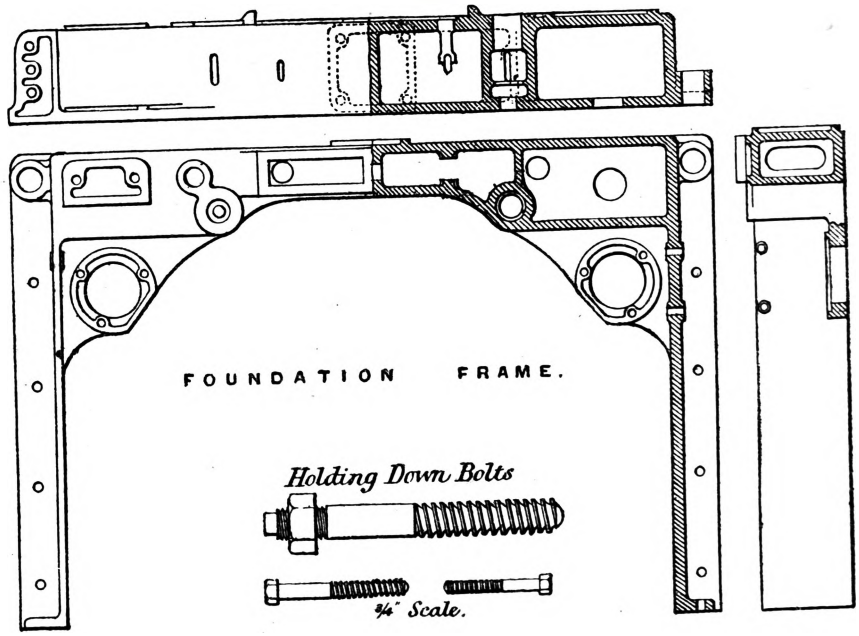

5350.

Trunnion Block.

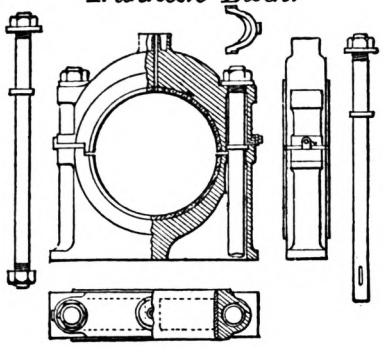

5351.

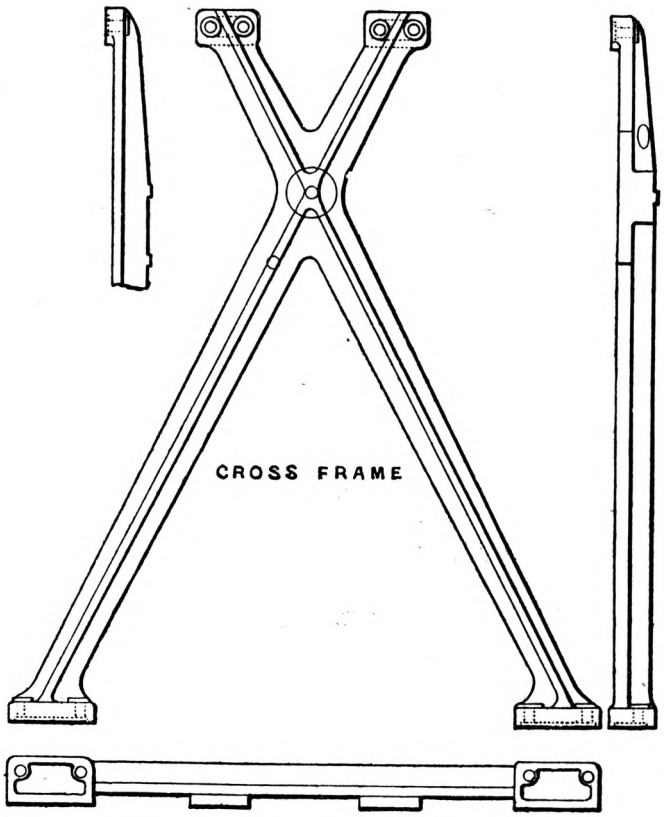

5352.

Support for Hot Water Cistern.

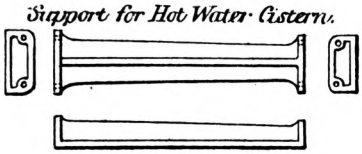

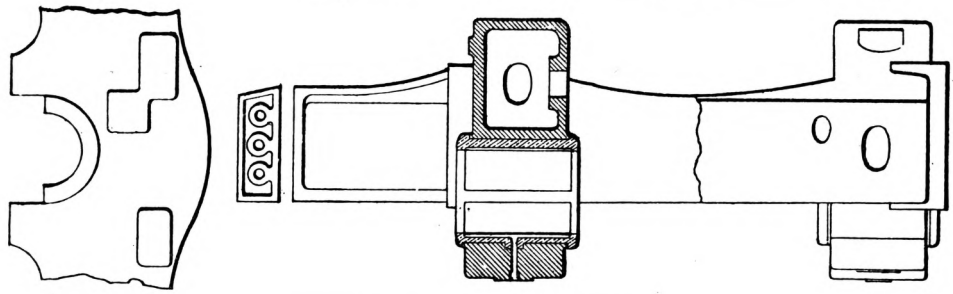

5353

Entablature.

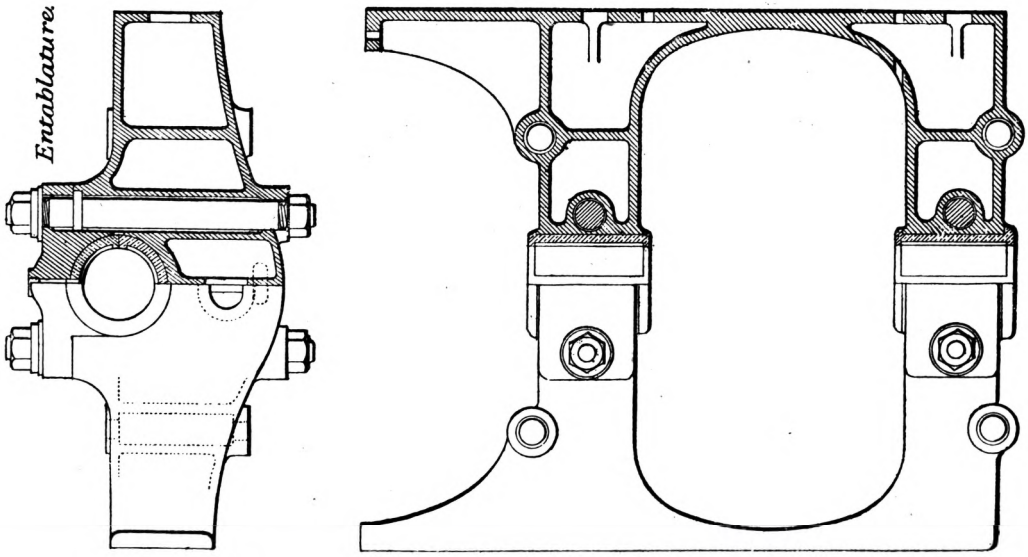

Paddle Shaft. 5354.

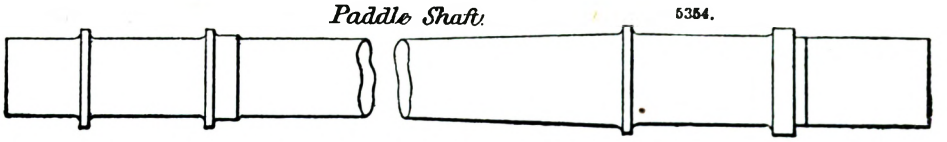

5535. *Crank Shaft.*

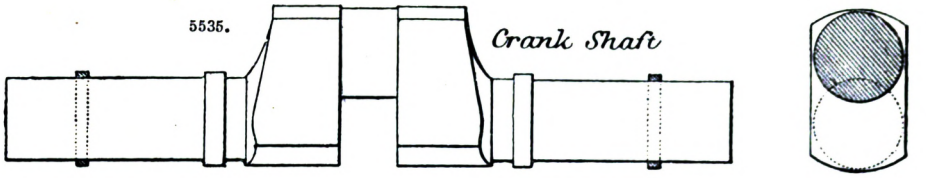

Piston Rod.

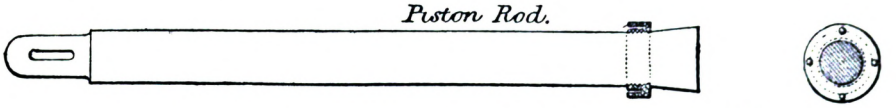

5356. *Piston Rod Cap.*

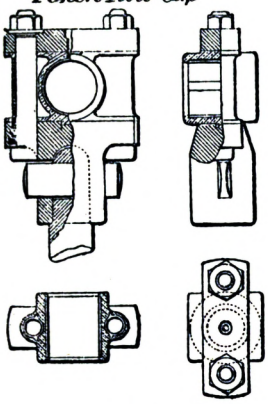

5357. *Crank.*

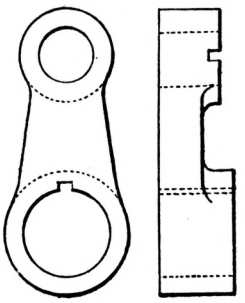

5358. *Disconnecting Ring and Disc.*

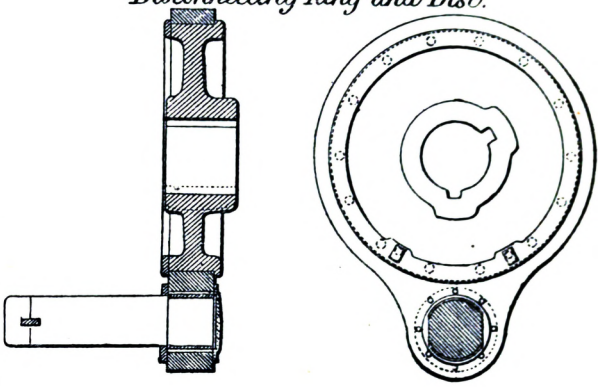

5359.

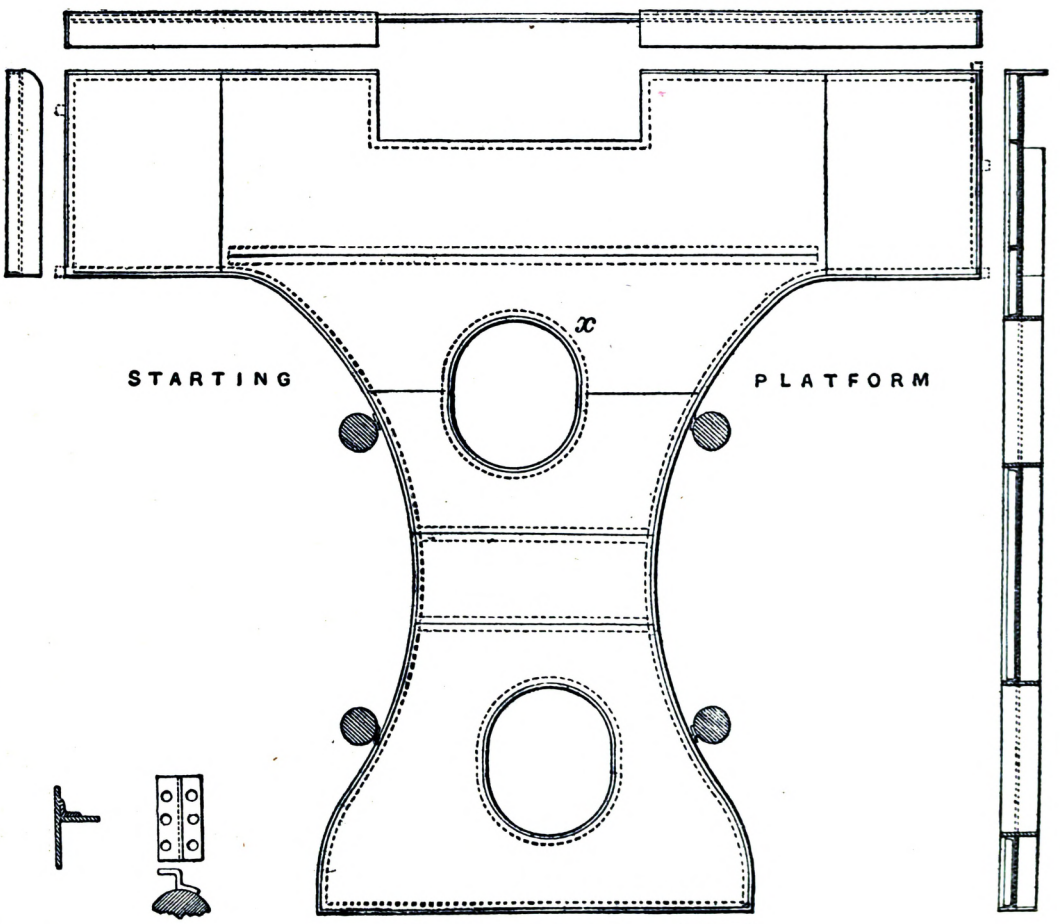

5360.

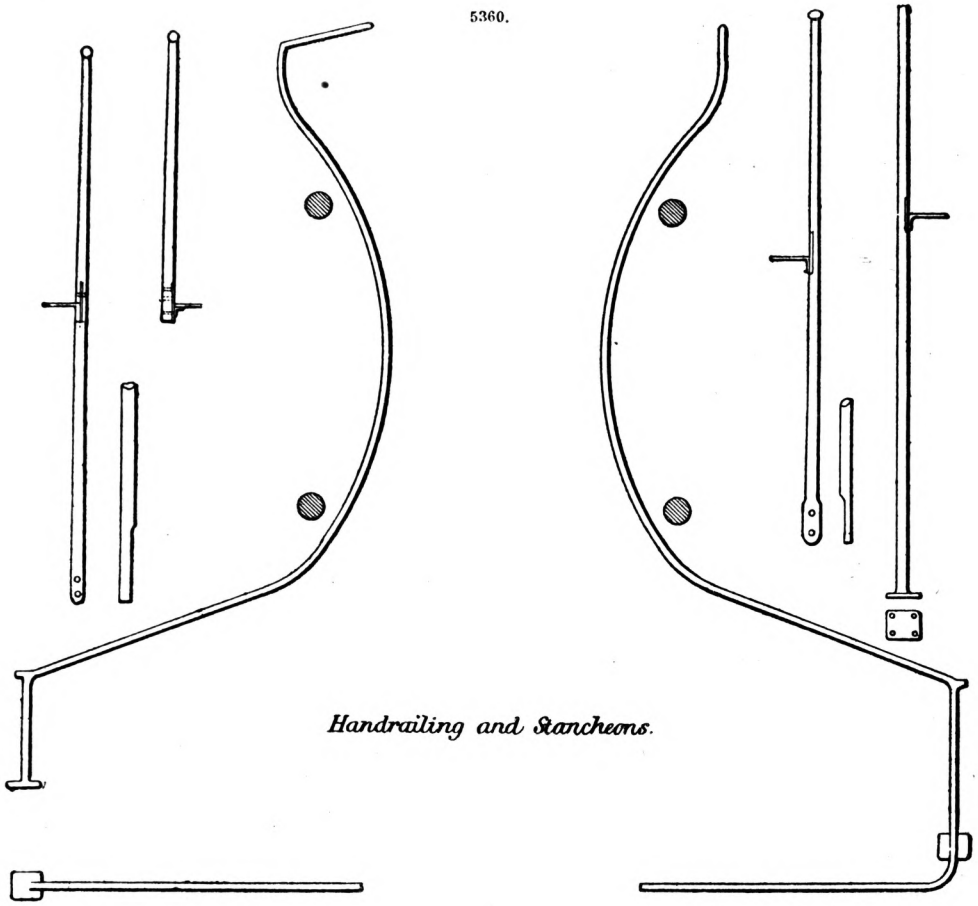

Handrailing and Stanchions.

5362.

Feed and Bilge Pump Piping.

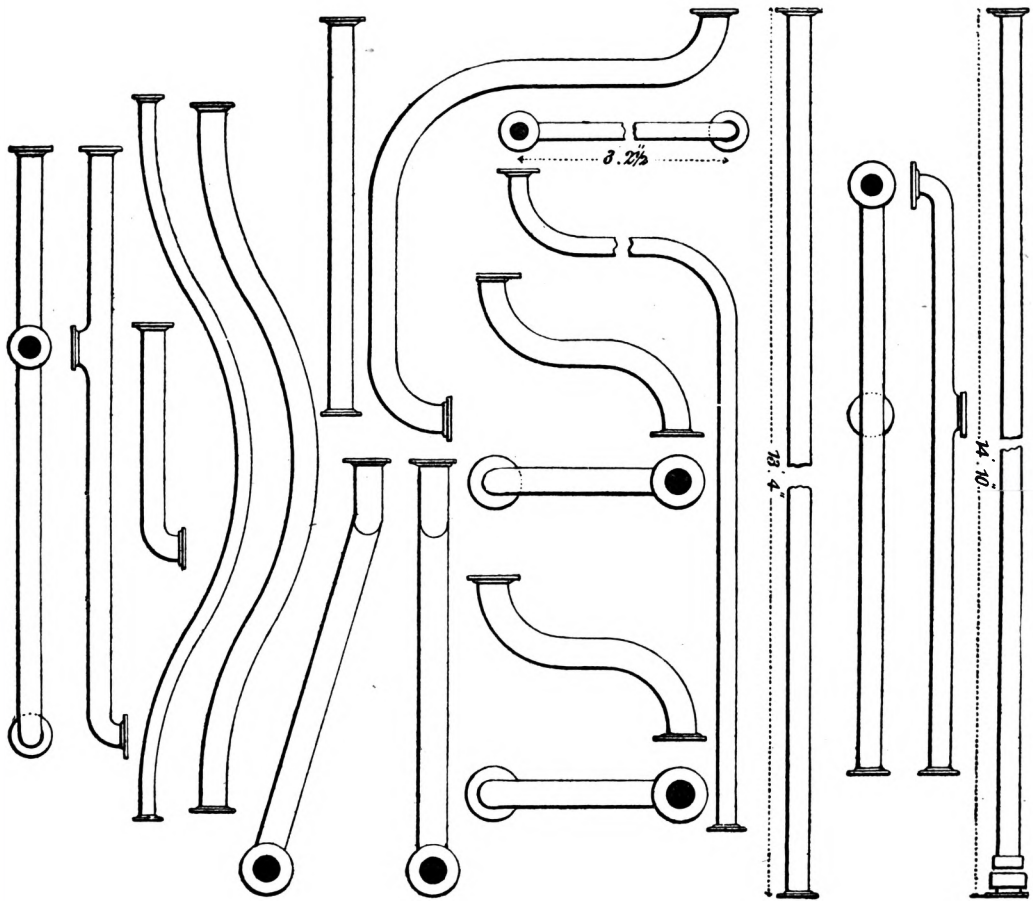

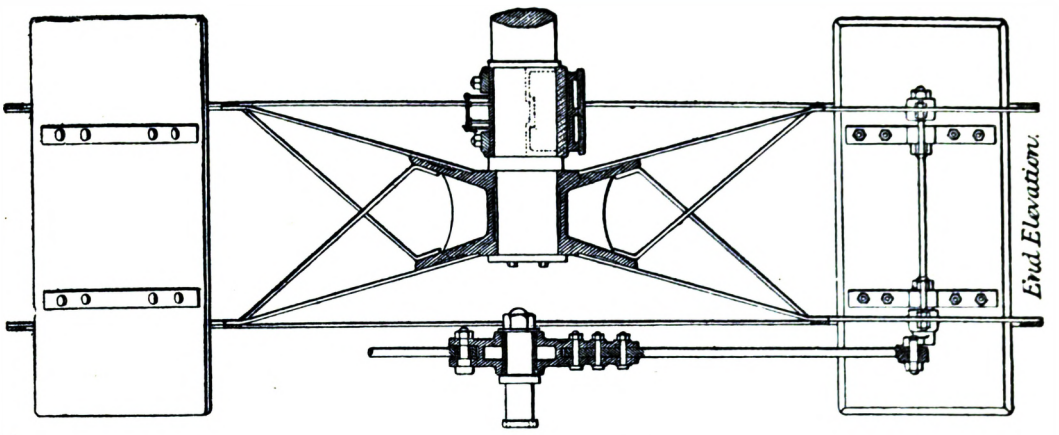

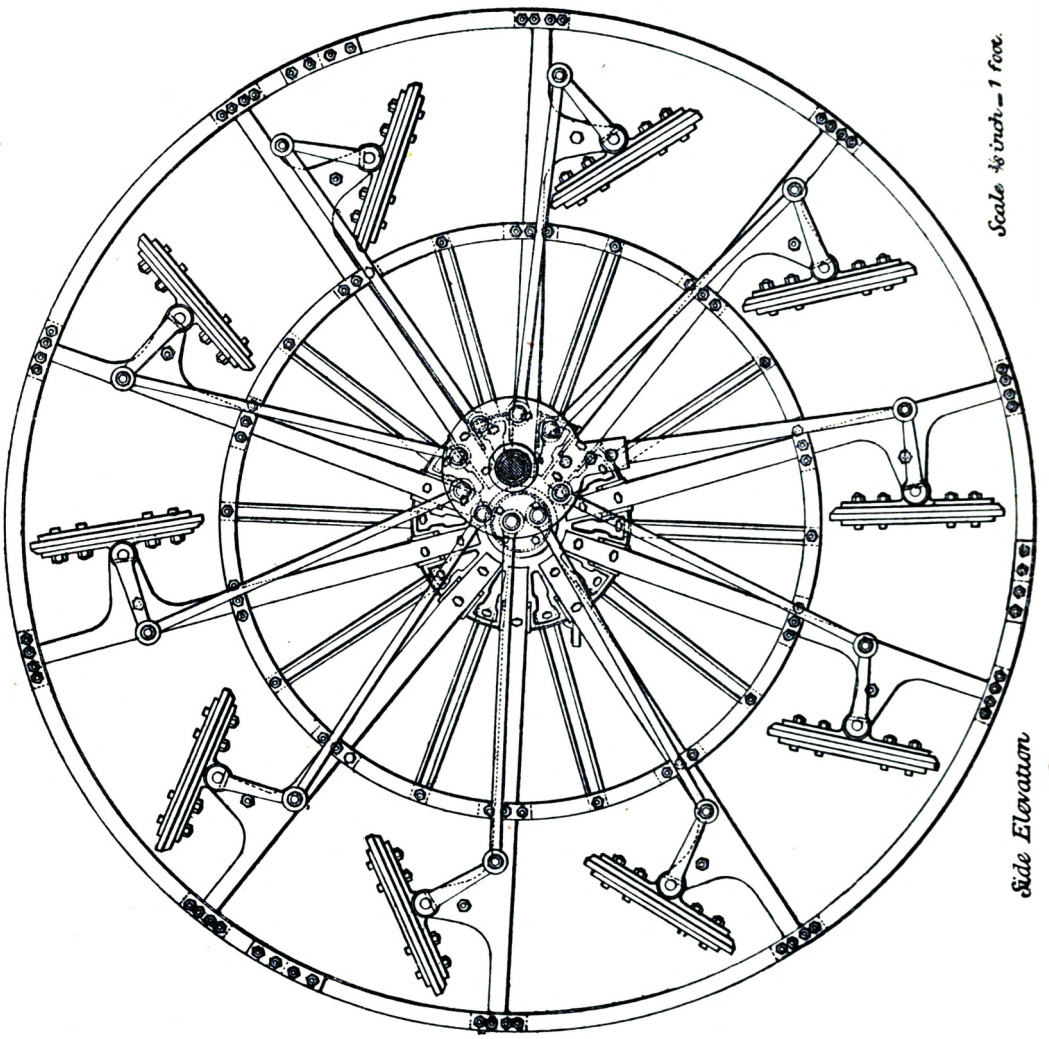

5365.
Feathering Paddle Wheel.

5361.

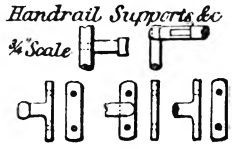

5363.

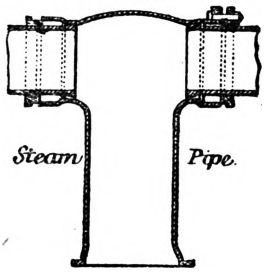

5364.

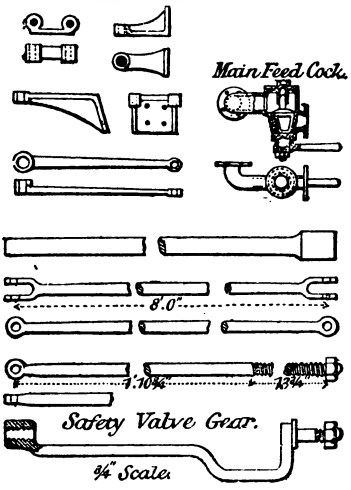

5366.

Centre Piece.

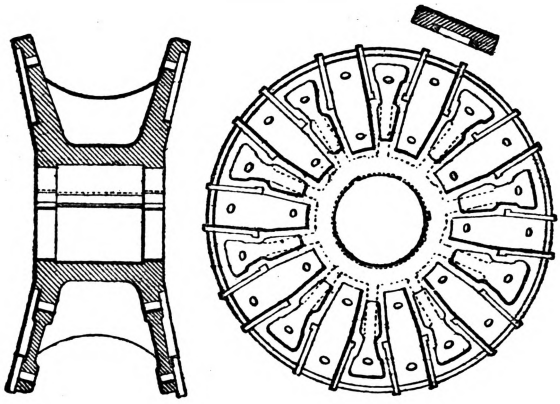

5367.

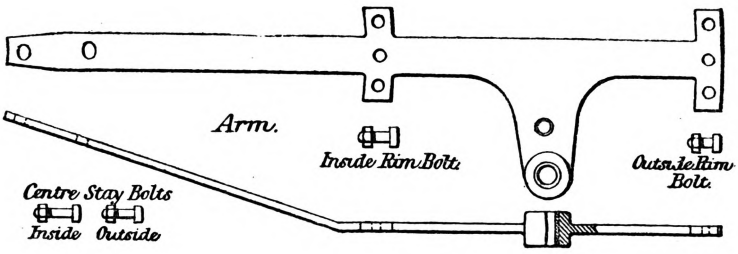

5368.

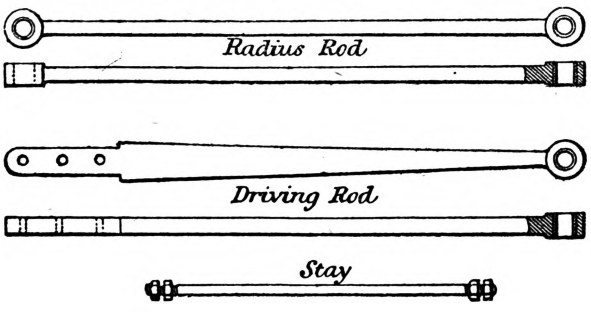

5369.

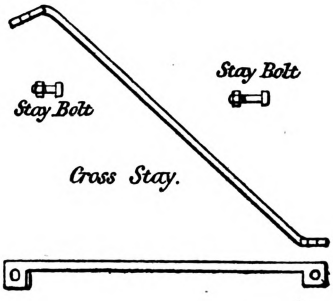

MASONRY. Fr., *Maçonnerie;* Ger., *Mauerwerk;* It., *Muramento, Fabbrica;* Span., *Albañileria.* Masonry is the art of building in stone or brick; it is classified either from the nature of the material, as *Stone Masonry* and *Brickwork*, or from the manner in which the material is prepared, as *Cut Stone* or *Ashlar Masonry; Coursed*, and *Common Rubble Masonry.*

Stone Masonry.—Ashlar.—Masonry of cut stone, when carefully made, is stronger and more solid than that of any other class; but, owing to the labour required in dressing, or preparing the stone, it is also the most expensive. It is therefore chiefly restricted to those works where a certain architectural effect is to be produced by the regularity of the masses, or where great strength is indispensable.

Before explaining the means to be used to obtain the greatest strength in cut stone, it will be necessary to give a few definitions to render the subject clearer.

In a wall of masonry, the term face is usually applied to the front of the wall, and the term back to the inside; the stone which forms the front, is termed the facing; that of the back, the backing; and the interior, the filling. If the front or back of the wall has a uniform slope from the top to the bottom, this slope is termed the batter. The term course is applied to each horizontal layer of stone in the wall; if the stones of each layer are of equal height throughout, it is termed regular coursing; if the heights are unequal, the term random, or irregular coursing, is applied. The divisions between the stones, in the courses, are termed the joints; the upper and lower surfaces of the stones of each course are termed the bed. The arrangement of the different stones of each course, or of contiguous courses, is termed the bond.

The strength of a mass of cut stone masonry will depend on the quality of the stone and mortar, the size of the blocks, the accuracy of the dressing, and on the bond used.

The size of the blocks varies with the kind of stone, and the nature of the quarry. From some quarries the stone may be obtained of any required dimensions; others, owing to some peculiarity in the formation of the stone, only furnish blocks of small size. Again, the strength of some stones is so great as to admit of their being used in blocks of any size, without danger to the stability of the structure arising from their breaking; others can only be used with safety when the length, breadth, and thickness of the block bear certain relations to each other. No fixed rule can be laid down on this point; that usually followed by builders is to make, with ordinary stone, the breadth at least equal to the thickness, and seldom greater than twice this dimension, and to limit the length to within three or four times the thickness. When the breadth or the length is considerable, in comparison with the thickness, there is danger that the block may break, if any unequal settling, or unequal pressure, should take place. As to the absolute dimensions, the thickness is generally not less than 1 ft., nor greater than 2 ft.; stones of this thickness, with the relative dimensions just laid down, will weigh from 1000 to 8000 lbs., allowing, on an average, 160 lbs. to the cubic foot. With these dimensions, therefore, each block will require a very considerable power, both of machinery and men, to set it on its bed.

For the coping and top courses of a wall, the same objections do not apply to excess in length; but this excess may, on the contrary, prove favourable; because the number of top joints being thus diminished, the mass beneath the coping will be better protected, being exposed only at the joints, which cannot be made water-tight, owing to the mortar being crushed by the expansion of the blocks in warm weather, and, when they contract, being washed out by the rain.

The accuracy with which the blocks fit is dependent on the manner in which the surfaces in contact, are wrought or dressed; if this part of the work is done in a slovenly manner, the mass will not only present open joints from any inequality in the settling; but, from the courses not fitting accurately on their beds, the blocks will be liable to crack from the unequal pressure on the different points of the block.

The surfaces of one set of joints should, as an essential condition, be perpendicular to the direction of the pressure; by this arrangement, there will be no tendency in any of the blocks to slip. In a vertical wall, for example, the pressure being downward, the surfaces of one set of joints, which are the beds, must be horizontal. The surfaces of the other set must be perpendicular to these, and at the same time perpendicular to the face or to the back of the wall, according to the position of the stones in the mass. Two essential points will thus be attained; the angles of the blocks, at the top and bottom of the course, and at the face or back, will be right angles, and the block will therefore be as strong as the nature of the stone will admit. The principles here applied to a vertical wall are applicable in all cases, whatever may be the direction of the pressure and the form of the exterior surfaces, whether plane or curved.

Workmen, unless narrowly watched, seldom take the pains necessary to dress the beds and joints accurately; on the contrary, to obtain what are termed close joints, they dress the joints with accuracy a few inches only from the outward surface, and chip away the stone towards the back or tail, so that, when the block is set, it will be in contact with the adjacent stones only throughout this very small extent of bearing surface. This practice is objectionable under every point of view; for, in the first place, it gives an extent of bearing surface, which, being generally inadequate to resist the pressure thrown on it, causes the block to splinter off at the joint; and in the second place, to give the block its proper set, it has to be propped beneath by small bits of stone or wooden wedges, an operation termed pinning-up or under-pinning, and these props, causing the pressure on the block to be thrown on a few points of the lower surface, instead of being equally diffused over it, renders the stone liable to crack.

When the facing is of cut stone, and backing of rubble, the method of splaying off the joint of the block may be allowed for the purpose of forming a better bond between the rubble and ashlar; but, even in this case, the block should be dressed true on the beds, and the upright joints should also be dressed true for some distance back from the face. If there exists any cause which would give a tendency to an outward thrust from the back, then, instead of thinning off all

the blocks towards the tail, it will be preferable to leave the tails of some thicker than the parts which are dressed.

Various methods are used by builders for the bond of cut stone. The system, termed headers and stretchers, in which the vertical joints of the blocks of each course alternate with the vertical joints of the courses above and below it, or as it is termed break joints with them, is the most simple, and offers, in most cases, all requisite solidity. In this system, the blocks of each course are laid alternately with their greatest and least dimensions to the face of the wall; those which present the longest dimensions along the face are termed stretchers; the others, headers. If the header reaches from the face to the back of the wall, it is termed a through; if it only reaches part of the distance, it is termed a binder. The vertical joints of one course are either just over the middle of the blocks of the next course below, or else, at least a distance equal to half the height of the course on one side or the other of the vertical joints of that course; and the headers of one course rest as nearly as practicable on the middle of the stretchers of the course beneath. If the backing is of rubble, and the facing of cut stone, a system of throughs or binders, similar to what has just been explained, must be used.

By the arrangement here described, the facing and backing of each course are well connected; and, if any unequal settling takes place, the vertical joints cannot open, as would be the case were they in a continued line from the top to the bottom of the mass; as each block of one course confines the ends of the two blocks on which it rests in the course beneath.

In masses of cut stone exposed to violent shocks, as those of which lighthouses and sea-walls in very exposed positions are formed, the blocks require to be not only very firmly united with each other, but also with the courses above and below them. To effect this, various means have been used. The beds and joints are sometimes arranged with projections, which fit into corresponding indentations of the adjoining stones. Iron cramps are let into the top of two blocks of the same course at a vertical joint, and are firmly set with melted lead, so as to confine the two blocks together. Stones of different courses are also connected with cramps, and holes are, in some cases, drilled through several courses, and the blocks of these courses are connected by strong metal bolts fitted to the holes.

The manner of dressing stone belongs to the stonecutter's art, but the engineer should not be inattentive either to the accuracy with which the dressing is performed, or the means employed to effect it. The tools chiefly used by the workman are the chisel, axe, pick, and hammer. The usual manner of dressing a surface is to cut draughts around and across the stone with the chisel, and then to use the chisel, the axe, pick, or the hammer, to work down the intermediate portions to the same surface with the draughts. In performing this last operation, the chisel and axe should alone be used for soft stones, as the grooves on the surface of the hammer are liable to become choked by a soft material, and the stone may in consequence be materially injured by the repeated blows of the workman. In hard stones this need not be apprehended.

The scaffolding used for stonework is similar to that used for brickwork, except that it is double, that is, formed with two rows of standards so as to be totally independent of the walls for support. The construction of scaffolds with round poles lashed with cords has lately been superseded in large works by a system of scaffolding of square timbers connected by bolts and dog-irons.

The hoisting of the materials is performed from these scaffolds by means of either a travelling crane, a movable jib-crane, or a derrick.

In hoisting blocks of stone they are attached to the tackle by means of a simple contrivance, Fig. 5370, made of iron, and called a lewis, which is shown in the annexed figure.

5370.

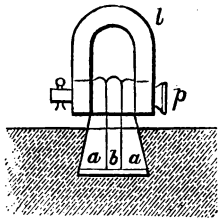

5371.

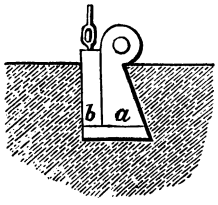

5372.

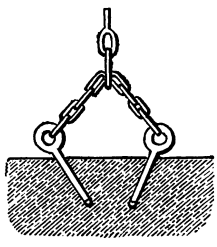

A hole tapering upwards, about 3 in. deep, having been cut in the upper surface of the stone to be raised, the two tapering side pieces *a a*, of the lewis are inserted, and placed against the sides of the hole; the centre parallel piece *b* is then inserted, and secured in its place by a pin *p* passing through all three pieces, and the ends of a loop *l* which embraces their heads. The stone may be then safely hoisted by the loop *l*, as it is impossible for the lewis to draw out of the hole. By means of the lewis in a slightly altered form, as shown in Fig. 5371, stones can be lowered and set under water without difficulty, and the lewis disengaged by means of a line attached to the parallel piece *b*, the removal of which allows the other to be drawn out of the mortise. Fig. 5372 shows a substitute for a lewis, consisting of two pins let into holes which they closely fit, sloping towards each other. When a strain is applied to the lifting chain these pieces jam in their places and support the weight of the stone.

Another way is to use large nippers or tongs, the claws of which enter a pair of holes in the side of the stone. The holes should be situated in a horizontal line, passing through or a little above the centre of gravity of the stone. Very hard stones such as granite can be lifted by a single iron plug, very slightly tapered and driven tightly with the hammer into a vertical

cylindrical hole in the top of the stone directly above its centre of gravity. At the upper end of the plug is an eye to which the chain for lifting the stone is hooked. After the stone has been laid in its place, a few sharp taps given sideways with the hammer loosen the plug.

When a block of cut stone is to be laid, the first point to be attended to is to examine the dressing, which is done by placing the block on its bed, and seeing that the joints fit close, and the face is in its proper plane. If it be found that the fit is not accurate, the inaccuracies are marked, and the requisite changes made. The bed of the course on which the block is to be laid is then thoroughly cleansed from dust, and well moistened; a bed of thin mortar is laid evenly over it, and the block, the lower surface of which is first cleansed and moistened, is laid on the mortar-bed and well settled, by striking it with a wooden mallet. When the block is laid against another of the same course, the joint between them is prepared with mortar in the same manner as the bed.

Quoins, or corner stones which should be of large size, and chosen with especial care, are at once headers and stretchers; each quoin being a header relatively to one of the two faces of the building which it connects, and a stretcher relatively to the other.

The thickness of the mortar in joints of well-executed ashlar masonry should be about $\frac{1}{4}$ of an inch. The volume of mortar required in all is about $\frac{1}{12}$ part of the volume of the stone. Ashlar masonry is used in engineering chiefly for the piers, abutments, arches, and parapets of bridges, for hydraulic works, for facing, quoins, string-courses, and coping to inferior descriptions of masonry, and to brickwork.

A rougher kind of ashlar masonry is built with stones of the sizes and figures mentioned, but scabbled or dressed with the pick or hammer. In whatever way the faces of ashlar stones are dressed, there ought to be a chisel-draught round the edges of the face forming sharp and straight edges with the chisel-draughts of the beds and joints in order that the stone may be set accurately.

In coursed rubble masonry the building consists of a series of horizontal courses seldom exceeding 1 ft. in height, each of which is correctly levelled before another is built upon it; but the side joints are not necessarily vertical. One-fourth part at least of the face in each course should consist of bond-stones or headers; each header to be of the entire height of the course, of a breadth at least equal to the height, and of a length extending into the building to from three to four times that depth, as in ashlar. Those headers should be roughly squared with the hammer, and their beds hammer-dressed to approximate planes; and care should be taken not to place the headers of successive courses above each other, as that arrangement would cause a deficiency of bond in the intermediate parts of the course. Between the headers each course is to be built of smaller stones, of which there may be one, two, or more in the depth of the course. These are sometimes roughly squared, so as to have vertical side joints; sometimes the stones are taken as they come, so that the side joints are irregular; but no side joint should form an angle with a bed joint sharper than 60°. Care should be taken not only that each stone shall rest on its natural bed, but that the sides parallel to that natural bed shall be the largest, so that the stones may lie flat, and not be set on edge or on end. However small and irregular the stones may be, care should be taken to make the courses break joint. Hollows between the larger stones should be carefully filled with smaller stones completely imbedded in mortar.

Coursed rubble masonry requires great care in the inspection of its progress to see that the preceding rules are observed; and especially that the interior of the wall contains neither empty hollows, nor spaces filled wholly with mortar or with rubbish where pieces of stones ought to be inserted, and that each stone is laid flat and on its natural bed. Care must be taken that the headers or bond-stones are really what they profess to be, and not thin stones set on edge at the face of the wall.

A cubic yard of rubble masonry requires, in order to allow for waste, about $1\frac{1}{5}$ cub. yd. of stones and $\frac{1}{5}$ cub. yd. of mortar.

The resistance of good coursed rubble masonry to crushing is about four-tenths of that of single blocks of the stone that it is built with.

Coursed rubble is used for retaining walls and wing-walls that require less strength than those built of ashlar, for the backing of pieces of masonry that are faced with ashlar for fence-walls, and for various other purposes.

Rubble is often built in random courses, that is to say, each course rests on a plane bed, but is not necessarily of the same depth or at the same level throughout, so that the beds occasionally rise or fall by steps.

Common rubble masonry differs from coursed rubble in not being built in courses; but in other respects the same rules are to be observed.

The resistance of common rubble to crushing is not much greater than that of the mortar which it contains; it is therefore not to be used when strength is required unless built with strong hydraulic mortar. Its chief use in engineering is for fence walls.

Ashlar backed with Rubble.—In this sort of masonry the stones of the ashlar face should have their beds and joints accurately squared and dressed with the hammer or the point, as the case may be, for a breadth of from once to twice the depth of the course inwards from the face; but the backs of these stones may be rough. The proportion and length of the headers should be the same as in ashlar, and the tails of those headers or parts which extend into the rubble backing may be left rough at the back and sides; but their upper and lower beds should be hammer-dressed to the general planes of the beds of the courses. These tails may taper slightly in breadth, but should not taper in depth.

The rubble backing should be carried up at the same time with the face-work, and in courses of the same depth, the bed of each course being carefully formed to the same plane with that of the ashlar facing.

In estimating the labour or cost of building such masonry as is here described, the area of the face multiplied by the distance inwards to which the dressing of the joints is carried, may be taken as ashlar, and the remainder as rubble.

These combinations of masonry are the most generally useful in engineering works; and they are especially suitable in a mechanical point of view where the pressure is concentrated towards the face of the building, as in retaining walls. For the abutment of bridges they are not mechanically suitable, because the pressure is concentrated towards the back; but if in any bridge coursed rubble is strong enough to resist the pressure at the back of the abutments, it may be used for that purpose, and faced with ashlar, for the sake of appearance, and of protection from the weather.

Coursed rubble masonry is often used in combination with ashlar quoins.

The following is the specification for the stonework used on a branch railway, and will be found a good guide for similar work elsewhere;—

Ashlar will be of two kinds—1st, smooth-faced or tooled ashlar; and 2nd, fair broached and rock-faced ashlar, with or without a chisel-draught round the edges; the rock-facing, where used, not to project more than 2 in. beyond the face of the chisel-draught or arris.

It is proposed to use but a limited proportion of this class of work, which will be principally confined to imposts, bed-plates for girders, springers, string-courses and copings, and occasionally in quoins and walling, and large arches, but power is reserved to use it wherever it may be deemed necessary.

Thickness of Ashlar Courses, and General Arrangement.—No course of ashlar to be less than 8 in. thick. One-third of the entire length of each course to be headers. No stone to be less than 2 ft. long, and when the thickness of the course does not exceed 10 in., the stones must not be less than 15 in. on the bed. Where the thickness of the ashlar courses exceeds 10 in., the breadth of the beds will not be less than a third more than the thickness of the course.

No header to be of less length than 18 in. in excess of the breadth of the course of ashlar to which it belongs. In walls up to 3 ft. thick, all headers to be through stones. The beds and joints of all ashlar stones to be dressed perfectly true, square, and full. No hollow beds will be allowed.

The vertical joints in all cases to be dressed true and square for at least two-thirds of the breadths of the beds in from the face of the work.

No joint to exceed $\frac{3}{16}$ of an inch in thickness.

The courses to be arranged with as much uniformity as possible, and laid perfectly horizontal, the lighter courses being kept towards the top of the structure.

The vertical joints of each course not to have less than 6 in. lap over the joints of the course next below. The work to be thoroughly well grouted after every course.

Ashlar in Copings.—The coping-stone will, as a rule, be dowelled, but the engineer may dispense with this system in such cases as he may deem expedient.

No stones in the ashlar copings to be less than 2 ft. 6 in. long, and the exposed surfaces to be dressed to a smooth face.

Large Rough Stone Blocks.—It may be necessary to use one or more courses of rough stone blocks in the foundations of bridges; such blocks to be only quarry scabbled, and none less than 8 in. thick, or less than 8 sq. ft. in area. These blocks to be measured half as ashlar, half as rubble; they are to be laid in mortar, and great care is to be taken that they rest evenly on their beds.

Coursed Rubble Facing.—This class of work will be extensively used. In bridges up to 20 ft. span no course to be less than 3 in. in thickness. When the span exceeds 20 ft., the minimum thickness of a course to be 4 in.

In structures other than bridges the minimum thickness may be 3 or 4 in., at the discretion of the engineer. No stone to be less than 9 in. long upon the face, or less than 8 in. on the bed.

In courses of 6 in. and upwards, no stone to have a bed less than one-third more than the thickness of the course in which it occurs.

One-fifth of the whole length of each course to be headers.

No header to be less than 2 ft. long. All rubble quoins to be formed of header-stones laid alternately along each face.

The vertical joints of each course not to have less than 3 in. lap over the joints of the course next below.

The joints in all cases to be dressed as far back from the face of the work as the thickness of the course in which they occur.

The beds are to be dressed level, so as to rest evenly on the mortar without any hollows or projections.

The faces of the stones to be left rough, but no part to project more than 1 in. beyond the face arrises, which are to be in all cases chipped off square.

The joints to be dressed square, true, and full, and no mortar joint to exceed $\frac{1}{2}$ an inch in thickness; and the average of the joints to be under $\frac{1}{2}$ an inch.

Face-work of this nature will be measured one-fifth more than the breadth of the courses, to compensate for the headers, on the same principle as is noted in the specification of ashlar.

Arrangement of Courses.—All the courses are to be kept perfectly horizontal, but uniformity in the thickness of each course throughout its entire length will not be insisted on. Every care must be taken to ensure proper skill in the arrangement of the work generally, and specially where changes in thickness of the courses occur; and where ashlar quoins or courses are used with the rubble, the latter must be brought up to the ashlar with a perfectly level bed.

The thicker courses are to be used in the lower portions of the work, and are also to be selected for the building of the piers and abutments, or other important walls.

At every 2 ft. in height it will be necessary to bring the masonry to a perfectly horizontal bed throughout the entire length of each particular wall, and to thoroughly well grout the whole.

In all stonework the stones are to be laid on their natural beds.

In all cases where battering walls are required, the beds of the stones are to be at right angles to the batter.

The face joints in all stonework are to be raked clean and neatly pointed, and the whole work carried on and completed to the entire satisfaction of the engineer.

Rubble Backing is to be of the best materials and workmanship, built of good sound stones. No stone to be of smaller size than one quarter of a cubic foot.

The stones of the rubble backing to be carefully set and well bonded with themselves and with the face-work. The whole to be laid flush in mortar so as to leave no spaces.

The interstices between the stones to be filled in with spauls or quarry chips. The larger stones to be roughly picked when necessary, so that they may rest evenly on their beds without hollows.

The rubble backing to be brought up flush with the face-work for every 2 ft. in height of the walls, and well grouted; and in no case will the building of the backing be allowed to proceed in advance of the face-work.

The joints in the back of all rubble walling to be raked and completely rough pointed.

Stone Pitching.—To be of the same class of stone as the rubble face-work; the face to be kept roughly dressed, and the stone to be as nearly as possible of a uniform depth. This pitching will be set on a layer of concrete of rubble, not less than 6 in. thick, as described for backing, and the whole must be thoroughly well grouted.

See BOND. BRIDGES. CONSTRUCTION. HARBOUR. LIGHTS, BUOYS, and BEACONS.

Books on Masonry;—Aviler (A.), 'Dictionnaire d'Architecture,' 4to, 1755. Nicholson (P.), 'Masonry,' royal 8vo, 1826. Adhemar, 'Traité de la coupe des Pierres,' 8vo and 4to, Paris, 1845. Nicholson (P.), 'Guide to Railway Masonry,' 8vo, 1846. Robson (R.), 'Mason's Practical Guide,' 4to, 1865. Dupuit (J.), 'Traité de l'Equilibre des Voûtes et de la Construction des Ponts en Maçonnerie,' 4to, Paris, 1870. Burn (R. S.), 'New Guide to Masonry,' 4to, 1871. Langley (Batty), 'Ancient Masonry,' 2 vols. folio. See also Belidor, Gauthey, Perronet, Rondelet, and Sganzin.

MATERIALS OF CONSTRUCTION, STRENGTH OF. Fr., *Résistance des Matériaux;* GER., *Festigkeit;* ITAL., *Resistenza dei Materiali;* SPAN., *Resistencia de Materiales.*

The strength of any material is the resistance it opposes to fracture, in whatever manner that fracture may be brought about. According to the nature of the force, or strain, tending to produce fracture, so is the strength of the material denominated. Thus the tensile strength of wrought iron, or its resistance to a strain of a tensile character, is greater than that of cast iron. In other words, it will require a greater tensile force, or strain, to fracture a given unit of the former than of the latter material. Again, we have the terms compressive strength, transverse strength, torsional strength, each expressing the resistance of the material to a strain of that particular character. The strength of materials is due to the force of cohesion existing between their component particles. Cohesion may be briefly described as that force which tends to prevent the separation of the particles of a body, when that body is acted upon by any external force. It might be supposed from this that the closer the particles of a body are together, or the denser it is, the greater is its strength. This, although generally, is not universally true. It has been found, in the case of wrought iron, that by reducing the diameter of a rod, it has become stronger than before, for a given unit of the material, although its density was absolutely diminished. The modifications of cohesion are almost infinite. Not only does it exist naturally, in different degrees, in different bodies, but it can be increased, decreased, or totally destroyed by artificial means. Of the real nature of cohesion we know nothing, any more than we do of the real nature of the imponderable elements. We know them only by their effects. It is reasonable to imagine that when the particles of a body are at rest, that is, when the body is not acted upon by any external force, those particles are maintained at a constant uniform distance apart, by a series of mutual corpuscular attractions and repulsions, which balance each other. Directly any external force is brought to bear upon the body, this state of normal cohesive equilibrium is disturbed, and the particles resist the disturbing action with a force proportional to that applied to them. The great problem in connection with the subject of cohesion, which has hitherto remained unsolved, is to discover the conditions which determine this state of equilibrium. If we could once discover the law of the arrangement of the particles among themselves, we should not only be enabled to ascertain to what particular arrangement a particular kind of resistance in a body is due, but we should be able to predict what would be the result of assigning any given relative position to the particles of a body. In the idea we entertain respecting the nature of the force of cohesion, it is necessary to assume the existence of a repulsive as well as of an attractive action. If the latter only existed, the particles of a body would be drawn nearer and nearer to one another, until they came into contact, and there would be no such a quality as porosity. But we know, as a fact, that the densest bodies are, to a certain extent, porous. On the other hand, if the former force were the only one brought into play, the particles of the body would be eventually dissipated into space. The normal condition of equilibrium, among the particles of a body, is therefore that in which the attractive and repulsive forces balance each other, being equal and opposite to one another. This condition, moreover, presupposes that a certain interval of space exists between the particles of all bodies.

A further consideration of this question will introduce us to another property, also possessed in a greater or less degree by all bodies, which is termed elasticity. This property is a very important one, and intimately connected with the strength of materials. Let A and B in Fig. 5373 be two particles of a body in a state of normal equilibrium, that is, separated by the distance which allows the attractive and repulsive forces to balance one another. If the former equal x and the latter y, we have the condition of equilibrium expressed by the equation $x = y$. Let an external force equal to P, now act upon the particle B, and push it towards A. As the attractive force between the particles A and B is constant, the latter force now pushing B towards A, is equal to

5373.

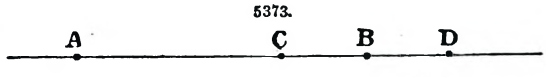

$x + P$, and also $x + P > y$. The particle B will continue to move towards A until the repulsive action becomes equal to the attractive action + the external force. Let C be the new position of the particle, and y_1 the new repulsive force, and the equation of equilibrium will be $x + P = y_1$. If the particle B be pulled away from A to the position D we shall have, by analogous reasoning, $y + P = x_1$. In the one case $P = y_1 - y$, and in the other $P = x_1 - x$. If B move towards A, without the application of an external force, then $x > y$. If it move from A, then $x < y$. After the particle B has come to rest at the point C or D, let the external force P be removed. What will take place? The two forces of attraction and repulsion will endeavour to resume their former equality, and to restore the particle B to its original position at B, and we shall again have $x = y$. This tendency constitutes the elasticity, or the elastic reaction, of a body. A body is said to be perfectly elastic when it resumes the exact form it had, previous to the application of the external force; that is, when the particle B, in the figure, returns exactly to the point B, after having moved either towards or from A. This coincidence depends upon certain circumstances connected with the laws of elasticity, which will be explained as we proceed. Upon them depend the deflection of beams and girders, and the safe loads which the engineer and the architect can place upon them. The theory of the propagation of light, heat, sound, and of many other physical phenomena, is dependent upon the laws governing the elastic medium, through which they are supposed to travel.

The different kinds of elasticity are known by names corresponding to the different kinds of strains to which bodies can be subjected. Thus, there is the elasticity of tension, of compression, of flexure, and of torsion. The value of these different elastic reactions can be ascertained by accurate measurement, and the laws which govern them, deduced. The same law applies equally to the elasticity of tension and that of compression, experiment having proved that it requires practically the same force to compress a rod by a given amount as it does to stretch it. To refer to Fig. 5373, if the points C and D be situated at equal distances from B, then will $x_1 = y_1$. The laws which govern the elasticity of tension can be mathematically deduced from the following experiment described by Jamin. In Fig. 5374, let A be a cast-iron bracket, solidly fixed to the wall B through the vertical wall-plate C. The bracket is terminated at one end, by a face of tempered steel, the surface of which is roughened similar to that of a file. Against this is placed another steel plate, also roughened, and the two can be tightened up by the bolts D, like the jaws of a vice. Between these two steel jaws is fastened one end of the rod E, the other end of which is held in a similar vice F. To the under part of the lower vice is attached a box G, containing a number of weights, arranged in horizontal layers, and capable of being moved with facility. To prevent the sudden shock that might arise from placing the weights incautiously in the box, and the possible fracture of the rod in consequence, the bottom of the box is furnished with three adjusting screws, H, H, H, similar to those used in theodolites and transit instruments of an old pattern. At the commencement of every experiment, these screws are lowered until they rest upon the ground, so that the weight of the box is also borne by the ground. The weights are then introduced, and the screws gently turned until they are raised from the ground, and the weight of the box and the contents brought to bear upon the rod. One precaution must be observed here. The rods, when they are of small diameter, do not hang in a straight, but in a curved line, and consequently the first result of the application of the weights is to straighten them, and also, apparently, to lengthen them. As this apparent elongation must not be confounded with that which is real and necessary to the object of the experiment, a small initial weight must be applied, in the first instance, sufficient to straighten the rod, and the measurement, obtained from the action only of the weights, subsequently added. Since the elongations of the rod are always very small, a cathetometer is employed to measure them, an instrument which we shall proceed to describe.

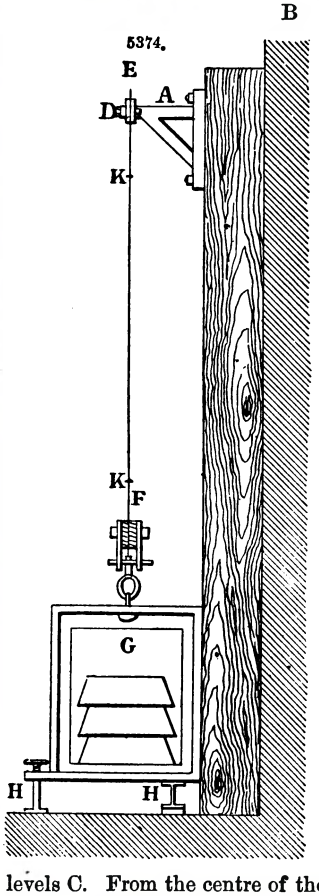

Cathetometer.—The cathetometer was invented by Dulong and Petit, improved by Pouillet, who bestowed its name upon it, and extensively employed by the celebrated chemist, Regnault. It is shown in Fig. 5375, and consists, in its simplest form, of a vertical graduated rod, upon which slides a horizontal telescope. With the telescope, the observer sights the two objects under examination, and the distance on the graduated rod, moved over by the telescope, is the measure of the difference of height between the two objects. The cathetometer rests upon a cast-metal tripod A, which is furnished with adjusting screws B, and levels C. From the centre of the tripod rises the solid wrought-iron shaft, which is about 4 ft. 3 in. in height, and before being fixed is carefully turned in a lathe, and brought to a conically-shaped bearing at the lower extremity. The axis of the instrument is that of the bearing, and it passes through the summit. The rod or shaft is covered by a hollow brass tube D, which is also turned in a lathe, so as to fit over the conical bearing of the rod. At the top it is furnished with a screw E. The tube can turn all around the axis of the rod, and can be fixed, at any time of the revolution, by a clamping screw. The tube carries on the outside two graduated rules or scales F and G, which are parallel to the vertical axis

of the instrument, and the edges of which are bevelled. One of them is divided throughout its whole length into millimètres. Upon this double rule slides the part of the apparatus carrying the telescope and its adjuncts. It is in two pieces, which clasp the rule as shown at H K in Fig. 5375, and at A B, C D, in Fig. 5376. They move with a slight friction upon the edges of the rules, and as the surfaces are lubricated, the movement is smooth and gentle. They can be clamped at any moment by the clamping screw C, and the distance they have travelled, read off by the vernier A, which reads to the $\frac{1}{10}$ of a millimètre. The two pieces H and K are distinct in themselves, but united by the tangent-screw H K, Fig. 5375, which draws them together or separates them. When they are clamped by the screw C, Fig. 5376, the turning of the tangent-screw will raise or lower the upper part K, which carries the telescope, so that the sight can be adjusted with the greatest precision. The telescope L M is provided with a spirit-level, by which its horizontal position is ensured. The level rests upon two Y's, in the ordinary manner. The cross-piece carrying the Y's is brought into a horizontal position by the screw N, which inclines it in one direction or the other. The instrument is set up and adjusted for observation as follows;—In the interior of the telescope, a pair of spider threads are fixed at right angles to one another, in such a manner that the threads and the image of the object observed, are seen at one and the same time. The threads can be brought to bear upon the smallest object. In every telescope there is a certain well-defined line, termed the optical axis, which passes through the intersection of the threads, or cross wires, as they are technically called, and the centre of the object-glass. When the image of any point in an object coincides with the intersection of the cross wires, the object itself is situated on the prolongation of the optical axis. On the outside of the telescope are fixed two collars A B, Fig. 5377, which are made in one piece, and afterwards cut into two. They have a common axis, which is the geometrical axis of the telescope. If the telescope is turned round in the collars, the geometrical axis will not be displaced, and the first step towards adjusting the instrument is to make the geometrical and optical axes coincide, an operation which is effected by means of the cross wires. This coincidence is known to be accomplished when the telescope can be turned round in the collars, without the intersection of the cross wires shifting, in the slightest degree, from the point upon which they are fixed. When the two axes are made to coincide, they will maintain that position permanently, provided the instrument is not subjected to any rough usage. Before observing with the cathetometer, there are three other adjustments to be made. The first is to place the telescope parallel to the spirit-level, the second is to place it perpendicular to the edges of the scales, along which it slides, and the third to ensure the verticality of the axis of rotation. In Fig. 5378, let A B be the axis of the telescope, C D the spirit-level, and E the position of the bubble. If A B and C D are parallel, and the telescope is turned end for end, A B and C D will become A_1 B_1 and C_1 D_1, and the position of the bubble will remain unaltered. But if the position of the level in the first instance is F G, it will, after turning the instrument end for end, be F_1 G_1, and the bubble will change its place, since it runs always towards the highest end of the tube. By the screws attached to the level it can be adjusted, until the bubble retains its horizontality in all positions of the instrument. In

5376.

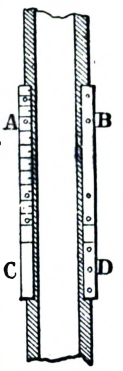

5375.

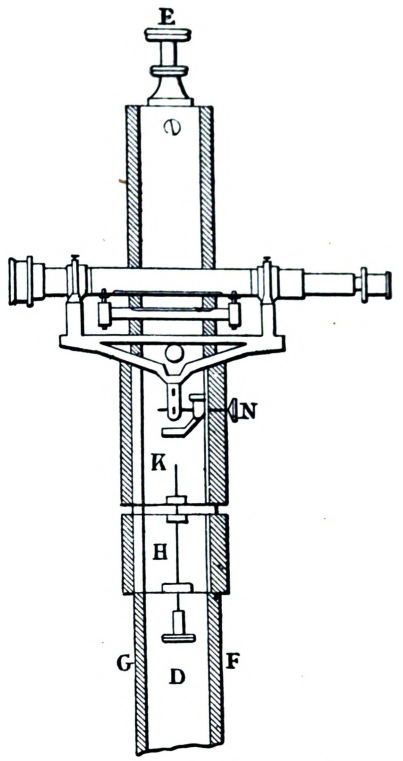

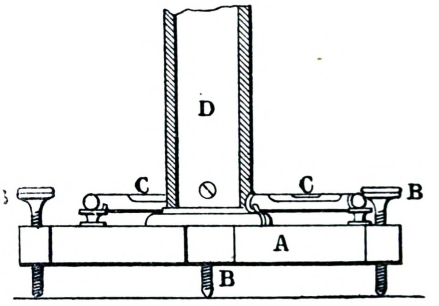

5377.

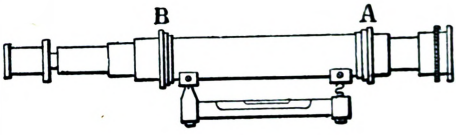

5378.

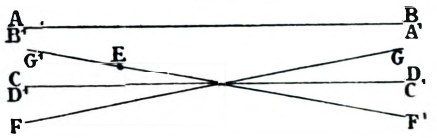

order to place the telescope perpendicular to the axis A B, in Fig. 5379, it must be turned through a half circle round the fixed shaft, and if the bubble does not change its position, the instrument is in proper order. But if the telescope is not perpendicular to the axis A B, that is in the line A_1 B_1 before its semi-revolution, let it be represented by the line C D, it will afterwards take the direction of C_1 D_1, and the bubble will change its place. By moving the screw N, acting upon the cross-piece in Fig. 5375, the bubble can be made to remain horizontal. To make the axis of the instrument vertical, the telescope is moved until it is brought into the direction parallel to the line, joining two of the adjusting screws in the tripod, and one of these screws turned until the bubble is at the centre of its run. The instrument is then rotated through an arc of 90°, and the third screw turned, until the bubble arrives at the same position as before. The adjustments are then complete, and the instrument fit for recording observations, provided the following precautions be employed. On each occasion that the telescope is moved vertically along the scales, the spirit-level will undergo slight oscillations. In Fig. 5380, let A and B represent the two positions of the level, which are not parallel to one another, and the differences of the height C D and E F of the points sighted are not equal to the distance A B travelled over by the telescope, and the error increases with the distance of the points observed. It is necessary therefore to slightly adjust the cross-piece at each observation, to bring the bubble to the centre of its run. In consequence of this necessity for continually moving the cross-piece, the tripod of the cathetometer is provided with two fixed spirit-levels, which are adjusted once for all, and serve to place the axis in a vertical position.

5379.

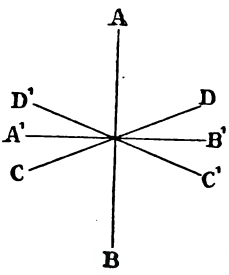

5380.

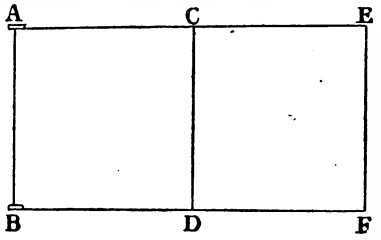

Let us now return to our experiment on the elasticity of tension in Fig. 5374. The cathetometer is set up in front of the arrangement shown in the figure, and accurately adjusted. A couple of fine marks K K are then made with a file on the rod. Care is taken to always sight the same edges of the marks, which are considerably magnified by the powerful lenses of the telescope attached to the cathetometer, and their distance, measured by the instrument, is given by the length of the rule at each phase of the experiment. This measurement is independent of any accidental vibrations and deflections that the arrangement may be subjected to. It can now be ascertained if the elongation is proportional to the length of the rod. If a number of marks are made on the rod at equal distances, and their respective distances from a given datum mark ascertained to be, under the action of an initial load, 1, 2, 3, 4, they become $1 + a$, $2 + 2\,a$, $3 + 3\,a$, and so on, when the tension is increased, thus proving that the elongations are in the direct ratio of the lengths of the rods. It can be also proved that they are proportional to the weights applied, and inversely proportional to the sectional area of the rods. As all bodies will not stretch to the same extent under the same weight, each body will have a coefficient of extension, or a constant of its own. If E = the elongation of a rod due to a weight P, L the length of the rod, A the sectional area, and C the constant, we have $E = \frac{P \times L \times C}{A}$. Putting M for the coefficient or modulus of elasticity, $M = \frac{1}{C}$; and the equation becomes $E = \frac{P \times L}{A \times M}$

The modulus of elasticity is the weight, which acting upon the unit of surface, and the unit of length, would produce an elongation equal to unity, or the weight, which would stretch a rod, having a sectional area equal to unity, to double its length. In English measures, the modulus of elasticity, or coefficient of elasticity, is therefore the weight in pounds, which would stretch a rod having a sectional area of 1 in. to double its length. Practically, this condition could not exist, for it would be impossible to stretch a rod to double its length without breaking it. As an example, let it be required to find the amount of elongation which a bar, 3 in. in breadth, ½ in. in thickness, and 20 ft. in length, would undergo when strained with a weight of 20 tons. From the equation we have $E = \frac{20 \times 12 \times 20 \times 2240}{1{\cdot}5 \times 24000000} = 0{\cdot}298$ in. A simple rule, which will reduce the labour of calculation, is the following;—Multiply the weight in tons by the original length of the bar in feet; divide the product by the sectional area of the bar, multiplied by the constant 893, and the quotient will be the required elongation in inches. It was proved by the experiment represented in Fig. 5374, that the elongations of the rod were proportional to the weights applied. This is the general law of elasticity, known as Hooke's law, under the title of 'ut tensio sic vis,' and signifies that the extension is proportional to the force applied. Without questioning the abstract truth of this law, it is sufficient to know that within certain limits, it is practically true for all purposes of construction. Under ordinary circumstances, some materials, after being subjected to a considerable tension or compression, will not return to their original length, but will undergo a permanent alteration in that direction. This alteration is called a set, and its amount depends upon the force applied, and the nature of the material. For example, when a bar of iron is subjected to its safe working load only, there is no appreciable set, but as it is necessary to test bars, in order to ascertain the quality and strength of the iron, a heavy tensile strain must be applied, and the set is, to some extent, an indication of the character of the material.

Care must be taken that the testing is not overdone, for if the strain is too great, and the set of a corresponding magnitude, the elasticity of the iron is injured, and the bar rendered useless. There are some peculiarities attending the set of iron. It is not produced instantaneously, but some time is required for it to acquire its full amount, due to a given weight or strain. When this has taken place, and the weight been removed, the second application of it, or of any smaller weight, will not always produce a further set. But if a weight greater than the first be applied, the bar will undergo another elongation or set, due to the greater strain upon it. A certain duration of time appears to be necessary to enable a body to adapt itself to a given strain, for if a heavy weight is rapidly and suddenly applied, it will break at once, without evincing any set. The strain is induced so suddenly that the elastic reaction has no time to exert itself. For each modulus of elasticity, or coefficient of elastic tension, of a material, there will be a corresponding coefficient of elastic compression. These two, although not quite identical, may be considered so, without sensible error, for wrought, but not for cast iron. In round numbers, 10,000 tons may be assumed as the modulus of elasticity of wrought iron, both in tension and compression. After being once stretched, cast-iron bars will sometimes take another set on the re-application of the force, but experiments of this nature are of little practical utility.

In Table I. are given the coefficients of the elastic tension, or moduli of elasticity for different materials, according to the best authorities. Care must be taken that, in all experiments undertaken to determine the modulus of elasticity of any material, the material must not have been subjected to a previous strain of any consequence, or the results will not be reliable. Vitreous materials do not undergo any set, but break at once when the strain is sufficiently great, and Hooke's law does not apply, practically, to some descriptions of stone under compression. Elasticity of volume, or cubic elasticity, is possessed by solids, but this feature does not enter into the consideration of the strength of materials. Fluids possess elasticity of volume only, and not of form. A distinction must be made between the absolute elasticity of a substance, that is, the exactness with which it returns to its original form after being stretched, and the degree to which it may be stretched before it breaks. The amount of play, or range of its elasticity, must not be confounded with the elastic force itself. An ordinary band of india-rubber has a much greater range of elasticity than a similar ring of glass, but india-rubber, nevertheless, does not return to its original form, after being strained, with the same exactness as glass.

TABLE I.—MODULI OF ELASTICITY IN LBS. A SQUARE INCH.

Material.	Modulus.	Material.	Modulus.
Acacia	1,152,000	Norway spar	1,457,600
Ash	1,622,400	Oak, Adriatic	974,400
Beech	1,351,500	„ African	2,305,400
Birch	1,644,900	„ American red	2,150,000
Box, Australian	2,155,200	„ Canadian	2,148,800
Brass, cast	9,050,000	„ Dantzic	1,191,200
„ wire	14,230,000	„ English superior	1,451,200
Copper, wire	17,000,000	„ „ inferior	873,600
Elm	1,019,920	„ European	1,475,000
Fir, red pine	1,680,000	Pine, pitch	1,225,600
„ spruce	1,600,000	„ red	1,520,000
„ larch	1,130,000	„ American yellow	1,600,000
„ Mar Forest	792,480	Poon	1,689,600
„ New England	2,191,200	Slate, Welsh	15,800,000
„ Riga	1,059,600	„ Westmoreland	12,900,000
Glass	8,000,000	„ Scotch	15,790,000
Greenheart	2,665,400	Steel	29,000,000
Gun-metal, copper 8, tin 1	9,886,500	„	42,000,000
Iron, cast	12,177,000	Stone, Portland	1,533,000
„ wrought, plates	24,000,000	Spotted gum, Australia	1,942,000
„ bar	28,350,000	Stringy bark „	1,375,000
„ wrought, wire	25,300,000	Teak, Indian	2,400,000
„ „ „ rope	15,000,000	„ African	2,300,000
Lead, cast	720,000	Tin, cast	4,608,000
„ sheet	720,000	Whalebone	820,000
Mahogany	1,425,000	Zinc, cast	13,680,000
Marble, white	2,520,000		

Elasticity of Torsion.—If an elastic rod, or thread, is fixed at one end and twisted at the other it will exhibit a reaction, which will tend to untwist it, and be proportional to the angle through which it is twisted. In other words, the angle of torsion is proportional to the force of torsion. If, moreover, different lengths of the same rod be subjected to the same force, the angles of torsion will be proportional to the lengths. Again, in the case of cylindrical bars, if the radii is represented by 1, 2, 3, 4, the respective angles of torsion will be equal to θ, $\frac{\theta}{16}$, $\frac{\theta}{81}$, $\frac{\theta}{256}$; so that the angle of torsion is inversely proportional to the fourth power of the radius of the rod. When acted upon by the same force, different substances will twist through different angles, and each substance will have a particular coefficient of torsion belonging to it. If we put this equal to T, make P equal to the moment of the forces acting upon the rod, L its length, R the radius, and θ the angle of torsion, the general equation is $\theta = \frac{P \times L}{T \times R^4}$. Coulomb's experiments proved the truth

of these laws of torsion. A prism undergoes a strain of torsion when a cross-section of it, in relation to another cross-section indefinitely near to it, turns round the axis of the prism. The exterior forces acting upon it tend to twist it round its axis. The angle of torsion is the angle which two originally parallel lines, passing through the respective centres of the two cross-sections of the prism, indefinitely near to each other, make between them, after the distorsion of the prism. This subject will be again referred to when we come to the resistance of materials to a strain of torsion.

Elasticity of Flexure.—If a rod A B of any material has one end fixed in a wall, as represented in Fig. 5381, and a weight W suspended at the other end, which is free, it will deflect below the horizontal line A C, and take the curved form shown in the figure. The rod will deflect until its elastic reaction makes equilibrium with the weight W. When the rod is in this position, the fibres on its upper surface are extended, and those on the lower compressed or shortened. If the weight be removed, the forces which are developed in the rod by the strain upon the fibres will cause it to return to the horizontal line A C, provided the weight applied has not exceeded the limits of elasticity of the material. The cathetometer may be employed to measure the amount of the deflection of the rod below the horizontal line A C. By adjusting the instrument so as to sight the two extremities A and B, the difference of level between them, which is the deflection of the rod, can be accurately determined. If θ equal the arc which the free end of the rod describes, the deflection is proportional to the arc. Let the rod be of uniform section throughout; let L = the length, B the breadth, D the depth, and C a constant, varying with the material, then the flexure F will be given by the equation $F = \frac{P \times L^3}{C \times B \times D^3}$. There are some solid bodies which exhibit no elasticity under any conditions, and may justly be considered altogether devoid of that property. Wax, when soft, clay, putty, and many similar substances come under this category, and are termed plastic. There are some other properties belonging to bodies which affect their strength, such as toughness, stiffness, or brittleness. Toughness is that quality in a body which enables it to undergo, without breaking, sudden and considerable changes of form, and is opposed to brittleness. Certain descriptions of timber and iron are very tough, whereas glass and highly-tempered steel are very brittle. The latter have no ductility. They will not stretch under a suddenly applied strain, but snap off short at once. Toughness is the desirable quality to impart to a body which is intended to be subjected to a strain of torsion. The term stiffness is frequently employed synonymously with that of toughness, but the former is more correctly used in relation to the strength of materials, considered with reference to their resistance to flexure. If there are two pillars of different material, but of the same dimensions, the one which deflects less under a given load is said to be stiffer than the other.

5381.

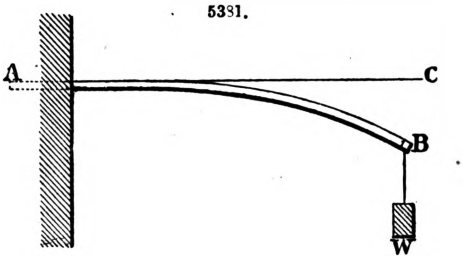

Classification of Strains.—All the strains to which bodies are subjected may be classed under one of two heads. They tend to destroy the body, either by compression or extension. Eventually, if the strain is carried to the breaking point, the fibres of the body will be either shortened or lengthened. For the sake of distinction, however, the strains upon bodies are usually classed under five subdivisions, and are—1. A strain of compression; 2. Of tension; 3. A transverse strain; 4. A shearing strain, or strain of detrusion; 5. A strain of torsion. These are thus explained;—A body is under a compressive strain when it is pressed in the direction of its length, as in the case of columns, posts, and rafters. It is tensilely strained when a stretching force is similarly applied to it in the direction of its fibres. Ropes, cables, king-posts, tie-beams, and the lower chords of timber bridges are familiar examples. A transverse strain tends to break a body across, in a direction either perpendicularly or obliquely to its length, as in the case of joists, beams supported either at one or both ends, and all classes of levers. A body is under a shearing strain, or strain of detrusion, when the strain tends to cause the particles to slide on one another along the plane of fracture. Examples are to be found in the rivets of ironwork, in punching machines, and in the ends of tie-beams, into which the feet of the rafters are mortised. A strain of torsion tends to wrench or twist the body, with a force acting in a direction perpendicular to some part of its length, as for instance in the axles of fixed wheels, the driving shafts of machinery, and the levers of presses.

Compressive Strength of Materials.—Taking the strains in the order of their enumeration, we commence with that of compression. The compressive strength of any material, under certain conditions, is directly proportional to its sectional area. The exceptions to this rule are the case of long pillars, and every instance in which the strain is no longer that of a simple thrust, but complicated by the addition of one of a transverse character. All bodies acted upon by a compressive strain may be termed struts, in contradistinction to ties, which undergo a strain of tension. Strains of compression and tension are of opposite character. The former are denoted by the sign + and the latter by —. Struts have different names given to them, according to the position they occupy in a structure, and the manner in which they support their share of the load. An upright strut is a post, column, or pillar; a slanting one a rafter, stay, or jib. As a body under a compressive strain may yield in one of two ways, either by being actually crushed, or partly through crushing and partly by flexure, it will be convenient to treat them separately. Experiment has proved that when the lengths of pillars of any given material are not less than one and a half, and not more than four or five times, the diameter which is constant for all of them, their respective strengths are practically the same. The crushing strength of any material is the weight which would just crush a prism, having a base of 1 sq. in., and the height of which is within the

limits of one and a half, and five times the diameter. Putting **A** for the sectional area in inches of a pillar of these proportions, and C for the crushing strength found by experiment for the given material, the value for S, the strength of the pillar is $S = A \times C$. When A = the unit of area, S = C, and the strength of the pillar is equal to the unit crushing weight. This simple rule would be universal in its application, independently of the length and diameter of the pillar, if we could ensure the line of pressure always coinciding with the axis of the pillar. But this is not possible, and since the absence of this coincidence is the cause of the bending of the pillar, we must have recourse to other rules for determining their strength. The fracture of short specimens of timber, iron, and stone always takes place by a wedge-shaped fragment splitting off at an angle with the base, and this angle is approximately constant for pillars of the same material. In all experiments undertaken with the object of determining the crushing strength of materials, the line of pressure must be made to coincide with the longitudinal axis of the prism under trial, and moreover. the pressure must be uniformly distributed, or the results will not be reliable. The neglect of these precautions has rendered many otherwise valuable experiments of no use whatever. Great care must likewise be used in placing dependence upon results obtained from experiments upon very short specimens, mere cubes in fact. This was a great error, fallen into by the early experimenters on the compressive strength of materials. When the line of pressure upon a column departs considerably from the longitudinal axis, the pillar becomes very much weakened. There is evidently greater probability of a solid pillar yielding from this cause than a hollow one, containing the same quantity of material. In the latter instance the diameter can be increased, so that if the line of pressure deviates from the axis of the pillar, it will not be so likely to pass outside the circumference. When timber or stone is used in the position of a pillar or strut, the safe position of the line of pressure is usually ensured by giving them such dimensions as will effectually confine it within them. Pillars of metal are sometimes solid when their diameter is comparatively small, but more generally hollow.

There are several forms or sections in which iron can be obtained ready rolled in the market, which are exceedingly well adapted to resist strains of compression. They are well known to engineers as angle, tee, channel iron, and others. Angle iron is a convenient section for the compression bars, in the web of lattice and other types of bridge girders of moderate span, and presents, when of small scantling, greater facilities than the other sections for riveting. Tee iron is a useful form for the same purpose, when it can be used of sufficient size to take rivets on each side of the rib. The handsomest form of strut is channel iron, and also a very strong one. It is used for the compression bars in the web of the main girders of the London, Chatham, and Dover Railway bridge over the Thames at Blackfriars, but the effect of its appearance is lost by the ribs being turned inside, so that the struts appear to be plain bars, like the ties. In Table II. is given the value of C, or the coefficient of the ultimate, or crushing, strength, for different materials, in lbs. a square inch.

Table II.—Coefficients of Ultimate, or Crushing, Strength in Lbs. a Square Inch.

Material.	Value of Coefficient.
Alder	6,960
Ash	9,180
Baywood	7,520
Beech	9,240
Birch, American	11,660
„ English	6,100
Brass, cast	10,300
Brick, light red	640
„ dark „	950
„ fire, Stourbridge	1,710
Brickwork in cement	1,000
Cedar	5,730
Cement, Portland	3,795
Chalk	450
Copper, cast	11,700
Crab	7,150
Deal, red	6,590
„ white	7,300
Elder	9,970
Elm	10,210
Freestone, Craigleith	5,490
Fir, red pine	5,790
„ American yellow	5,400
„ spruce	6,820
Glass, flint	27,590
„ common green	31,880
„ white crown	31,000
Granite, Aberdeen	10,910
„ Peterhead	8,280
„ Cornish	6,360
„ Dublin	10,450
„ Mount Sorrel	12,860
Greenstone, Giant's Causeway	17,220
Hornbeam	7,150
Iron, cast	96,410
„ wrought	37,250
Larch	5,550
Lead	7,000
Limestone, compact	7,710
„ Purbeck	9,160
„ Anglesea	7,580
„ Dublin	16,940
Mahogany, Spanish	8,100
Marble, Italian	9,680
„ Devonshire red	7,430
Oak, American red	6,000
„ Canadian	6,000
„ Dantzic	7,720
„ English	10,030
Pine, pitch	6,790
„ red	6,660
„ yellow	5,430
Poplar	5,120
Portland stone	4,000
Sandstone, Bramley Fall	6,060
„ Yorkshire paving	5,714
„ red Runcorn	2,185
„ Quartz rock, Holyhead, across lamination	25,500
„ parallel to lamination	14,000
Steel, cast	225,570
Slate	11,000
„ Irish, average	16,660
Teak	12,050
Tin	15,000
Walnut	7,230
Whinstone, Scotch	8,270
Willow	6,130

In the values given in Table II. of the coefficients of ultimate strength, relative to the crushing weight of different kinds of timber, the material is supposed to be thoroughly dried. In some kinds of timber, the strength of a wet specimen is only half that of a dry one. As an example of the strength of a short pillar, let it be required to ascertain what weight in tons will crush a piece of beech 3 ft. long and 9 in. square. Let W equal the crushing weight in tons, and A the area of the section; then $W = \frac{A \times 9240}{2240} = \frac{9 \times 9 \times 9240}{2240} = 334{\cdot}12$ tons. Again, what weight in tons will crush a solid short pillar of cast iron 1 ft. 6 in. in length and 4 in. in diameter. Here

$$W = \frac{0{\cdot}7854 \times 96410 \times 16}{2240} = 540{\cdot}86 \text{ tons.}$$

Classification of Pillars.—We have now to consider the case of columns, in which the ratio of the length to the diameter exceeds the limits of 5½ or 6 to 1, and they become long columns, and their strength is calculated by a different rule. Two cases for investigation here present themselves; one in which the pillar is so long that it fails altogether by flexure, like a beam under a transverse strain, and its breaking weight falls far short of the value of that required to crush a short pillar. The other case includes all pillars which, although they fail ultimately by deflection, yet their length is such, that their breaking weight approaches much nearer to that which would crush a short pillar than in the former case. The three classes of pillars therefore are;—First, short pillars, which fail by crushing. Secondly, long pillars, which fail by flexure. Thirdly, intermediate pillars, which fail partly by crushing and partly by flexure. Long pillars of cast iron are those whose length is at least thirty times their diameter, if both ends are flat, and at least fifteen, if both ends are rounded. In all long pillars, the resistance to breaking, when the pillar is firmly bedded, is three times that when the ends are rounded and capable of motion. If one end of a pillar be flat, and the other rounded, its strength is the mean between that of a pillar with both ends rounded, and of one with both ends flat. The relative strengths of three cylindrical pillars, the first having both extremities rounded, the second one rounded and one flat, and the third both flat, are as 1, 2, and 3. Moreover, if the ends of a pillar are firmly fixed, its power to resist breaking is equal to that of a pillar having the same diameter and half the length, and with the ends rounded, so that the strain passes through the longitudinal axis. The rule for calculating the strength of solid cast-iron long columns, or those in which the length is more than thirty times the diameter, and when the ends are flat and fixed, is as follows;—Put D for the external diameter in inches, L for the length in feet, and W for the breaking weight in tons; then, $W = 44 \frac{D^{3{\cdot}6}}{L^{1{\cdot}7}}$. *Example.*—What is the breaking weight of a solid cast-iron pillar 10 ft. long and 3 in. in diameter, with ends flat and fixed? Here $W = \frac{44 \times 3^{3{\cdot}6}}{10^{1{\cdot}5}} = 44 \times \frac{52}{50} = 45{\cdot}76$ tons. When the column is hollow, and under similar conditions, putting D and d for the external and internal diameters respectively, $W = 44 \frac{D^{3{\cdot}6} - d^{3{\cdot}6}}{L^{1{\cdot}7}}$. In the original investigations of Hodgkinson, who is the great authority upon this subject, the common factor is not quite the same in the two formulæ, but the discrepancy is practically of no consequence, and it simplifies the calculations. For solid long columns of wrought iron, in which the length exceeds sixty times the diameter, we have $W = 134 \frac{D^{3{\cdot}6}}{L^2}$. *Example.*—To find the value of W for a solid wrought-iron pillar 4 in. in diameter and 10 ft. long, we have $W = 134 \frac{4^{3{\cdot}6}}{10^2} = 134 \frac{147}{100} = 196{\cdot}98$ tons. Columns of wrought iron of this description are considerably stronger than similar pillars of cast iron, as may be inferred by calculating the strength of a similar column of the latter material, for which we have $W = 44 \frac{4^{3{\cdot}6}}{10^{1{\cdot}7}} = 44 \frac{147}{50}$ $= 129{\cdot}36$ tons. For solid long square columns of dry Dantzic oak, in which the length exceeds thirty times the diameter, putting B for the length of the side, $W = \frac{11\ B^4}{L^2}$; and for similar columns of dry red deal, $W = \frac{7{\cdot}8\ B^4}{L^2}$. If the ends of the above pillars are rounded, and the ratio between their lengths and diameters halved, their respective breaking weights will equal approximately $\frac{W}{3}$. Representing the strength of a long cast-iron column by unity, that of similar columns will be as follows;—Cast steel, 2·5; wrought iron, 1·7; Dantzic oak, 0·1; Memel, 0·08. By Gordon's rule, putting L for the length in inches, S for the sectional area in inches, C and F for constants, and the rest of the notation as before, we have the general formula $W = \frac{C \times S}{1 + \frac{F\,L^2}{D^2}}$, and for the breaking weight of round cast-iron hollow columns $W = \frac{36\ S}{1 + \frac{L^2}{400\ D^2}}$. If the section be a hollow square, and D the diagonal, $W = \frac{36\ S}{1 + \frac{3\ L^2}{800\ D^2}}$. When the section is a cross, and

D the length of the diameter, from end to end of the shortest pair of arms, $W = \frac{36\,S}{1 + \frac{3\,L^2}{400\,D^2}}$.

When the ends are hinged, take $100\,D^2$ instead of $400\,D^2$ and $200\,D^2$ instead of $800\,D^2$, in these formulæ. J. T. Hurst gives the following rules for columns of wood, with ends flat and fixed, when D = the diameter in inches, L the length in feet, S the sectional area in inches, and W the breaking weight in tons. For round columns, $W = \frac{C \times S}{1 + \frac{L^2}{2\,D^2}}$. For square or rectangular columns, $W = \frac{C \times S}{1 + \frac{L^2}{4\,T^2}}$; when T is the side or least thickness in inches. The values of C for different woods are here given;—

Teak	4·5	Canadian oak	2·9
English oak	4·0	Spanish mahogany	2·5
Baltic oak	3·7	Baltic fir	2·5
Beech	3·0	American pine	2·4

When the pillars are of angle iron, tee, channel, or H section, the values of C and F in Gordon's formula are C = 19 and $F = \frac{1}{900}$

The following facts obtain with regard to long columns. The addition of discs to cast-iron columns, affords practically no increase of strength. Long cast-iron pillars, with both ends rounded, break only in the middle. With both ends flat, they break at the middle, and near each end. With one end rounded, and one flat, they yield at about one-third of the distance from the rounded end. No additional strength is given to hollow pillars, by enlarging the diameter at the middle, but a slight increase is given to solid pillars, especially if the ends are rounded. Solid square pillars break transversely, in a direction nearly parallel to their diagonals. If a long pillar is so insecurely, or defectively fixed, that the line of pressure lies in the direction of the diagonal, instead of the axis, its strength is only one-third of that which it would be, if properly fixed. The strength of similar long pillars is nearly in the ratio of their transverse section. As an example. What is the breaking weight of a hollow cast-iron column, having a length of 10 ft., and external and internal diameters of 4 and 3 in. respectively? By the formula

$$W = 44\,\frac{D^{3\cdot6} - d^{3\cdot6}}{L^{1\cdot7}} = 44\,\frac{(147 - 52)}{50} = 83\cdot6 \text{ tons.}$$

An intermediate pillar, if it is of cast iron or timber, is one whose length is less than thirty times its diameter, and if of wrought iron, less than sixty times the diameter. To find the breaking weight of an intermediate solid pillar, with both ends flat and fixed, let W = the breaking weight found by the formula for long columns, A the sectional area of the pillar in inches, C the coefficient of crushing, and W_1 the breaking weight in tons of the intermediate pillar, then $W_1 = \frac{W\,A\,C}{W + 0\cdot75\,A\,C}$. The strength of intermediate pillars with flat ends varies from three to one and a half times that of those with rounded ends, or less, according as the number of times which the length exceeds the diameter, is reduced. The strength of those with one end round and the other flat, is nearly an arithmetical mean between the strengths of the other two, whatever their proportion might be. A slight inequality in the thickness of hollow pillars at different parts does not much affect the strength. If the specified thickness be put equal to T, then the range lies between 0·75 T and 1·25 T as the extremes. The relative strengths of long solid pillars of different cross-sections, but having the same length and weight, and of the same quantity of material, are square pillar = 0·93; round = 1·00; and triangular = 1·10. In hollow pillars of wrought iron, when the proportion of length to width is as 15 or 20 to 1, the strength is practically independent of the length. Round tubular pillars of wrought iron are stronger than those of a rectangular form, the thickness of both being uniform. The strongest form of timber pillar is the square, the quantity of material, and the length being constant. If L be the length of a long, round, or square timber pillar, and D the diameter, the strength is nearly as $\frac{D^4}{L^2}$. Were the material absolutely incompressible, the strength would be represented by that proportion, which is the equation of Euler.

In the experiments made on stones of different kinds, the strongest were found to be the basalts, slates, and primary limestones. Sandstones vary considerably in strength. It appears from the experiments of Vicat, that if a column is built up with only horizontal joints, that is, each stone constituting a course in itself, its crushing strength is nearly the same as if it were a monolith. The beds and joints are supposed to be the best of the kind. The strength of cylinders in motion, between two horizontal planes, is proportional to the product of their diameter and axis. The strength of spheres to resist crushing, is as the square of their diameters. Moreover, representing the strength of a cube by unity, that of the inscribed cylinder on its base will be 0·80; that of the same cylinder on its side 0·32, and that of the inscribed sphere 0·26. When a body undergoes a strain of compression, when it is inclined at an angle to the horizon, the strain upon it is greater than when it is in a vertical position. Generally, the equation is, putting W for the load, θ for the angle of inclination to the horizon, and S_1 for the actual strain, $S_1 = W \times \text{cosec. } \theta$.

The strength of braced pillars is, within certain limits, independent of their length. B. B. Stoney concludes, from an experiment made on one of the braced struts of the Boyne Viaduct, that the strongest form for a hollow rectangular pillar, is that in which the greater part of the material is collected at the angles, in which case, the angles act similar to the flanges of a girder, and the thin plates as the web.

Tensile Strength of Materials.—The strength of materials with respect to a strain of tension has now to be considered. The tendency of a strain of tension, upon any material, is to pull it perfectly straight from end to end. It is independent of the length of the body, constant throughout it, and inversely proportional to the sectional area, provided the area is uniform, and the same precautions are observed in the application of the strain, as in the case of bodies under compression. If T is the coefficient of the ultimate tensile strength of 1 sq. in. of any material, and A its sectional area, then the breaking or tearing weight is equal to A × T. A bar under a strain of tension, in comparison with one under a strain of compression, may be said to be in a state of stable equilibrium, while the bar under compression is in a state of unstable equilibrium. If we imagine a bar in tension to be deflected by any extraneous force, the tendency of the strain acting upon it is to pull it straight again, and to restore it to its original condition of equilibrium. But if a bar in compression is placed under similar circumstances, the tendency of the strain upon it is to increase its deflection. The operations of the furnace and the foundry have a very considerable influence upon the tensile strength of cast iron. Considered as a material for construction, cast iron is not suited to undergo strains of a tensile character. Wrought iron and steel are to be preferred to it in all cases. With respect to the tensile strength of these two materials, the results arrived at by Kirkaldy are exceedingly valuable. From them we learn that the breaking strain of both wrought iron and steel is no certain test of their quality. The true test is to be found in comparing the breaking weight with the contraction of area at the time of fracture. The popular opinion that a rough bar is stronger than a turned one of the same sectional area, is a fallacy.

When iron is broken suddenly, it always presents a crystalline appearance, but when slowly, a fibrous one. The more iron is rolled and worked, the less likely it is to break suddenly. When steel is fractured suddenly the appearance is granular, and devoid of the brilliancy which attends the fracture of wrought iron under the same conditions. When it is broken slowly, the appearance is fibrous and silky, and the line of fracture is not at right angles to the length. Steel is reduced in tensile strength by being hardened in water, but greatly increased in both tensile strength and toughness by being hardened in oil. The specific gravity of a specimen is a good test of its quality. Instead of the density of iron being increased by the process of wire drawing and cold rolling, as supposed, it is decreased. The strength of iron plates, when stretched in the direction of their length, is about 10 per cent. more than when stretched at right angles to the length. Bars are stronger than plates, although the difference appears to depend, in some measure, upon the scantlings of the bars. Annealing iron diminishes its tensile strength, but at the same time improves its ductility and toughness. When old chains are bought to be used again, they should always be annealed. When commencing the erection of the Albert Bridge, the contractor's engineer, F. W. Bryant, had every chain and rod of iron passed through the fire before employing them in the works. The use of steel is not so general as it ought to be, considering the great tensile and compressive strength of the material. This is owing to the great uncertainty that attends its manufacture. In a given number of specimens, some are all that could be wished, while others are so hard and brittle that they are of no use whatever. Manufacturers should bear in mind that great tensile strength is not always the chief desideratum in a constructive material; other qualities, such as ductility and toughness, are frequently of quite as much, if not of more, importance.

Table III.—Coefficients of Ultimate, or Tearing, Strength in Lbs. a Square Inch.

Material.	Value of Coefficient.	Material.	Value of Coefficient.
Acacia	16,000	Fir, red pine	13,000
Alder	13,900	„ spruce	12,400
Ash, average	16,000	Glass, flint rod	2,400
Beech	11,350	„ common green	2,900
Birch, American	15,000	„ white crown	2,500
Box	20,000	„ plates	5,000
Brass, cast	18,000	Gun-metal	36,300
„ wire	91,000	Hornbeam	20,000
Brick	290	Iron, cast	16,550
Brickwork in mortar	50	„ wrought rolled bars	57,500
„ „ cement	280	„ „ plates	50,700
Cedar	11,200	„ „ wire	85,000
Cement, Portland	270	Jugeb	18,500
„ Roman	190	Larch	10,000
Chestnut, Spanish	13,300	Lancewood	23,400
Copper, bolts	47,900	Lead, cast	1,820
„ cast	19,000	„ sheet	1,920
„ sheet	30,000	Mahogany, Spanish	16,000
„ wire, not annealed	77,500	Maple	10,500
„ „ annealed	32,100	Marble, Italian	720
Cordage	8,600	Mortar, ordinary	50
Deal, Christiana	12,000	Oak, American red	10,250
Elder	10,000	„ Black bog	7,700
Elm	13,650	„ Canadian	10,000
Freestone, Craigleith	450	„ English	17,000

TABLE III.—COEFFICIENTS OF ULTIMATE STRENGTH—*continued.*

Material.	Value of Coefficient.	Material.	Value of Coefficient.
Pine, pitch	7,650	Teak, Indian	15,000
„ red	12,000	Tin	4,750
„ yellow	11,000	Walnut	8,130
Poplar	5,500	Whinstone, Scotch	1,450
Steel, bars	97,800	Willow	12,500
„ plates	85,150	Yellow metal, patent	49,200
Slate	11,200	Yew	8,000
Sycamore	13,000	Zinc	7,700
Teak, African	21,000		

In Table III. of the value of T, the coefficients of the tearing strain of different materials, the coefficients for the various kinds of timber are calculated on the assumption that the strain is applied in the direction of the length of the specimens. It is necessary to observe this distinction, as the tensile strength of timber, when the strain is applied across the grain, is very much less than when it is applied in the direction of the length. For instance, the tensile strength of fir is reduced to 690 lbs.; that of larch to 1335 lbs., and that of oak to 2300 lbs. for each square inch of section.

Chain Cables.—Of all bodies subjected to tensile strain, chain cables are those which are most severely tried. There are three principal kinds of chains and chain cable, including close-link chain, stud-link chain, and long-link chain without studs. Upon the authority of Brown, Lennox, and Co., the average breaking strain of stud-link chain of good quality is equal to 17·28 tons a square inch of each side of the link. In converting a bar into a link, it loses more than 30 per cent. of its original strength. The Government proof test for stud-link chains is equal to 11·50 tons a square inch of each side of the link. The Admiralty proof test for close-link chain is equal to 7·60 tons for the same unit of area. A close-link chain, having a diameter of 1 in., is as strong as a machine-made rope, having a girth of 10 in., their relative weights being as 3 to 1 nearly. With respect to long-link chains, Stoney observes, "The links of long-link chains are not oval like those of a stud-chain, but parallel-sided, and an open-link chain, of the same length of link as a stud-chain, is lighter by the weight of the studs. It is suited for moorings of a permanent character, such as those of harbour mooring buoys, beacon buoys, or light-ships, which are seldom shifted, and where consequently flexibility is a secondary object. Besides its comparative lightness, long-link chain has another advantage over either close-link or stud-chain, for each 15-fathom length of the two latter requires long open links at the ends, for the purpose of connecting it by shackles to the adjoining lengths, and if one of these chains break, a whole length must be taken out, since there is not room for a shackle to pass through the ordinary close-link or stud-link. When, however, a long-link breaks, the links adjoining the fracture can be connected together, without taking out a whole 15-fathom length, as a shackle will pass through any of the long links. The Admiralty proof for large open long-link chain without studs is 315 lbs. a circular $\frac{1}{8}$ of an inch, or one-half the proof of stud-chain." The proof test, used by the Trinity Board, for cable chains intended for moorings, is equal to 8·50 tons a square inch of each side of the link. A link is also cut out, here and there, to show the quality of the iron, as the resistance to a tensile strain is no proof of the toughness and other desirable qualities in the material.

As to the comparative strength of stud and close-link chains, Brown, Lennox, and Co. remark, "We are not of opinion that studs increase the strength of chain, or enable it to bear a heavier ultimate breaking strain, than if made without them, both descriptions being made of the same length of link. The object of their being used is to prevent collapse of the link, which, in open-link chain, takes place at a strain considerably below the breaking strain, and, of course, renders the chain unserviceable. They thereby enable chains made with them to be used for heavier strains than open-link, but do not add to their ultimate strength; indeed, from the experiments we have tried, and the experience we have had, we are inclined to believe that the link without stay pins, almost invariably breaks at a higher strain than stud-chains. The proof for studded chain is the higher, only because a sufficient proof cannot be given to open-link chain before the link spoils its form and becomes rigid. The stay prevents collapse, by which the link is prevented elongating so much, and taking its natural position, before its utmost power is exhausted, and a break ensues. The link, if sound in the workmanship, will nearly always break near the stay pin, which is caused by the nip across the stay pin. If made without stays, it will collapse until it is rigid, and the iron will reach as near as possible the direct line of the strain, or right through the centre of the chain; the sides of the link will incline inwards, and the break will ensue at the nip across the crown of the next link. In connection with the subject of tensile strain, there is a curious relation between it and the pitch of musical notes in a piano, or other stringed instrument. Let W be the straining weight in lbs.; W_1 the weight of wire between the bridges; L the length of the wire in inches; V the number of vibrations in a second, and N the number of inches in a second's pendulum; then $W = \frac{W_1 \times V^2 \times L}{N \times \pi^2}$.

Wilfred Airey has applied this principle to ascertain the tensile strains in the bars in the web of bowstring girders. The process by which the tensions were ascertained is both novel and ingenious, and is as follows;—The ties in the model girder were constructed of thin steel wire, and on being sounded gave a good resonant musical note. Advantage was taken of this to compare the note of any given string in the girder, with that of a free string suspended in a frame made for the purpose, and the length of which could be adjusted, so as to equal that of the string in the girder under comparison. The length having been adjusted, a small scale span was suspended from one end of the free string, and weights gradually placed in it, until the note of the free string

exactly coincided with that of the string in the girder. This was determined by ear with the greatest accuracy, the effect of 0·5 oz. in 80 oz. being clearly perceptible. Consequently the tension of the string in the girder was measured by the weight in the scale pan of the free string, and this was done for every string in the girder. The determination of the thrusts, which first appeared a great obstacle, was reduced to that of determination of tensions by the following expedient;—It was observed that the effect of a uniformly distributed load was to throw all the strings into tension. The girder was therefore loaded with a heavy uniform load, and the travelling load was then applied in addition. The effect of this travelling load would be to increase the tension of some of the strings and to diminish that of others, but so long as the tension on every string, produced by the stationary load, was greater than the thrust produced by the travelling load, the string would remain in tension, and its tension could be estimated as described. Consequently it will be seen that the recorded tensions and thrusts, which would be produced by a single weight at various distances along the girder, are the results of a differential process. Thus a uniformly distributed load is applied on the girder and the tension of every string ascertained. Then a travelling weight is introduced in addition, and hung at any one point, and the tension of every string is again taken. The difference of the tensions in the two cases of each string, is taken as the thrust or tension of the string produced by the travelling load.

Transverse Strain.—Of all others, transverse strain is that with which we are most familiar. All materials are comparatively weaker when exposed to a transverse strain, than when subjected solely to either a tensile or compressive strain. This may be possibly due to the more complicated nature of the strain, although its actual results, which are the important points to the engineer, are devoid of all complexity. In the action of transverse strain, strains of both tension and compression are developed in the body, and the phenomenon of deflection comes also into action. If a beam rests upon two supports at its extremities, and a weight is placed at its centre, the beam will have a tendency to deflect. It has not been determined, with respect to any material, what is the smallest weight which would cause an incipient flexure in the beam. The same result will ensue if the beam is fixed at one end and a weight attached to it at the other, as shown in Fig. 5382, an inspection of which will point out that the fibres of the upper or convex surface, A B, are extended, while those on the lower, or concave, C D, are compressed. Between these two surfaces there must evidently be a line, or layer of fibres, which are neither extended nor compressed, but which remain, so far as their length is concerned, quite unaffected by the strain. The exact position of this line E F, or of the layer of unaffected fibres, is, in some instances, a work of great labour to determine, but its approximate position, in those forms of beams and girders usually met with in practice, can be ascertained sufficiently accurately for all practical purposes. If a horizontal plan is drawn through the line E F, so as to leave exposed a plan of the layer of invariable or unaffected fibres, then that plan represents the neutral surface of the beam, since it contains all the fibres unaltered in length. The line E F is therefore the longitudinal elevation of the neutral surface, or the line representing the curve of the unaffected fibres. If a cross-section of the beam is made at any point, it will cut the neutral surface, and the intersection will give the line E F in Fig. 5383, which is the neutral axis of the cross-section A B C D of the beam. Very great influence upon the strength of a beam is exercised by the position of the line E F, in the cross-section, and the arrangement of the material relatively to it, determines the proper forms to be adopted for girders. A vertical longitudinal plane, M N, in Fig. 5384, drawn through the centre of the beam, will intersect the neutral surface, and cut all the neutral axes in the point P, which may be called the neutral point for any given section. The relations between neutral surface, line of curve, and neutral axis, are those of plan, elevation, and section, as shown in Fig. 5385.

5382.

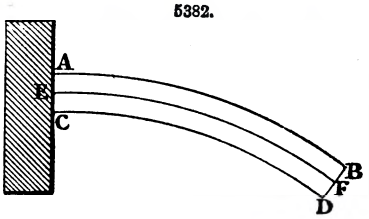

5384.

5383.

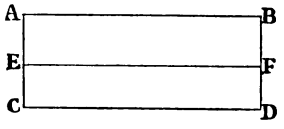

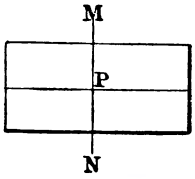

5385.

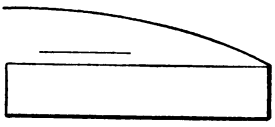

The straining weight is supposed to act at right angles to the longitudinal axis of the beam, both before and after bending takes place. Mathematically speaking, it cannot fulfil both these conditions, but if the first is ensured, the second may be assumed to be so also. If, moreover, the resistance of the material to tension and compression is considered identical, which may be safely done within ordinary limits, the position of the neutral axis in any cross-section of a beam, will coincide with the position of its centre of gravity. Consequently the neutral axis of all the cross-sections, or the neutral line of all symmetrical beams, will pass exactly through their centres, and the neutral line and the longitudinal axis will coincide. The law with regard to the arrangement of the particles about the neutral axis, independently of the nature of the materials, is that each particle, or each layer of fibres, exerts a resistance against a transverse strain, in direct proportion to its distance from that axis. Generally if x is the resistance of any particle situated at a distance y, from the neutral axis, and x_1 that of any other particle at another distance y_1, then their respective moments will be $x \times y$ and $x_1 \times y_1$. The conclusion to be deduced from this fact is that all the material

should be placed as far as possible from the neutral axis, a condition which, when carried out, gives rise to the ordinary flanged girder. If in the solid beam A B C D, in Fig. 5386, the material near the centre is transferred to the top and bottom, the result is the flanged girder, in which every layer of particles in the flanges acts with nearly twice the amount of resistance in the solid beam. The example shown in Fig. 5386 is not to be regarded as indicating the best method of converting the solid beam into a flanged girder, or as the best form of girder, but merely as an illustration of the manner in which the arrangement of the material, with reference to the neutral axis, affects the strength of the body. The correct ratio of the dimensions of the top and bottom flanges respectively, depends upon the nature of the material, and its ultimate resistance to the several strains of tension and compression.

5386.

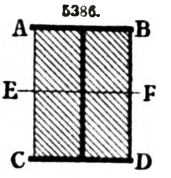

It was supposed that the neutral axis in beams and girders exposed to transverse strain, shifted its position, but the microscopical examinations of Barlow and those of Brewster demonstrated the contrary. Very recently the same result has been arrived at by Nickerson, an engineer at St. Louis, who made a series of experiments, similar in character to those of Brewster. He employed the principle of the polarization of light, and his apparatus consisted of a polarizer formed of glass plates, an analyzer of plate glass blackened on one side, and a kind of vice of bronze provided with a screw, by means of which a strain of either compression or tension could be brought upon the specimens of glass under experiment. In Brewster's experiments polarized light was transmitted through a small rectangular glass girder about 6 in. in length, 1½ in. in breadth, and rather more than a quarter of an inch in thickness. When the girder deflected under transverse strain, the neutral axis maintained its position in the centre, while above and below it the evidence of strain was rendered manifest by coloured curved lines. The glass pieces in Nickerson's experiments before being submitted to strain appeared black, since polarized light does not traverse glass in its normal condition, that is, when unacted on by strain or pressure, but so soon as they were placed in the vice, and the screw brought into action, two bright bands or lines appeared on either side of the centre, enclosing a dark space. As the intensity of the pressure was increased, the edges of these bands became more clearly defined, and ultimately took the form of distinct curved lines, corresponding to the lines of equal resistance. They increase in number and brilliancy in the direct ratio of the strain, and as they increase so does the included dark space diminish. The observations prove that the neutral axis is a flexible line which, in a rectangular girder, remains parallel to the upper and lower surfaces, and passes through the centres of gravity of the several cross-sections only when the load is uniformly distributed over the whole length of the girder, or when the length is infinite. On the other hand, when the pressure is local, which is tantamount to a load not uniformly distributed, the neutral axis is more or less influenced in its position and form, from the point of the application of the partial pressure to each point of support. In glass girders in which the length is fourteen times the thickness, the neutral axis is practically horizontal, and even when this proportion is as 10 to 1 the departure from the horizontal line is barely more than just appreciable. It is remarkable that the undulations of the polarized light are limited to two directions at right angles to one another, and that in every experiment two images corresponding to these two directions were produced by rotating the analyzer through an angle of 90°. Nickerson terms one of these the positive and the other the negative image. These images evidently represent the two descriptions of reactions, perpendicular to one another, which are developed in a girder or column when subjected to strain. They may be considered as the shearing strain and the longitudinal strains of tension and compression developed in the flanges of a girder, since each image increased in brilliancy as the strain to which it corresponded was augmented.

A transparent column submitted to a strain of compression presents a series of coloured rings which, when the column is of glass, are congregated in number from three to six at each end. When a softer material, such as copal, is employed, the column is covered with coloured bands, extending from one end to the other. It is to be noticed that the blue and red bands are always separated by a dark space, as in the case of girders, which indicates that this portion of the column is either free from strain, or that there the existing forces equilibrate one another. Before discovering the meaning of the coloured bands, Nickerson made several experiments upon cubes of copper, of which the length was 1½ in., the external and internal diameters 0·45 in. and 0·35 in. respectively. These tubes suffered deformation under pressure, and when compressed until they assumed a permanent shape, they presented a series of protuberant rings separated by a uniform space and resembling waves. Steel tubes gave similar results. The practical conclusions to be drawn from these experiments is, that the strength of hollow columns can be considerably increased by furnishing them with rings or diaphragms, placed at the points which correspond to the position of the waves in the permanent deformation.

It has been already stated that the resistance, and consequently the strain, upon any two fibres of a beam is proportional to their respective distances from the neutral axis. From this can be readily deduced the total moment of strain upon any beam. Let F be the strain acting upon any fibre, having an area equal to unity, at a distance x from the neutral axis. The strain upon any other fibre having also an area equal to unity, and situated at a distance y from the axis, will therefore be equal to $\frac{F \times y}{x}$, and if its area have any value such as a, the total strain upon it will be equal to $\frac{F \times y \times a}{x}$. The moment of this strain upon the fibre will be equal to the product of the above fraction, and the perpendicular distance the fibre is from the neutral axis, which equals y, and therefore the moment of the strain equals $\frac{F \times a \times y^2}{x}$. If we extend this equation to all the fibres in the cross-section of the beam, and calling M the total moment, we have

$M = \frac{F}{x}\int a y^2$. But $\int a y^2$ equals the moment of inertia of the beam of the given cross-section, which is usually represented by the letter I, so that by substitution in the equation $M = \frac{F \times I}{x}$. The determination by mathematical analysis of the values of I, does not belong to the present subject, but in Table IV. the values of I are given for beams of different cross-sections.

Table IV.—Values of I.

Form of Section.	Value of I.
Solid rectangle	$\frac{B D^3}{12}$.
Hollow rectangle	$\frac{B D^3 - B_1 D_1^3}{12}$.
Solid square	$\frac{B^4}{12}$.
Hollow square	$\frac{B^4 - B_1^4}{12}$.
Solid circle	$\frac{\pi R^4}{4}$.
Hollow circle	$\frac{\pi (R^4 - R_1^4)}{4}$.
Flanged girder, omitting strains in the web	$\frac{A A_1 D^2}{A + A_1}$.
Flanged girder, including strains in the web	$\left(A + \frac{A_2}{3}\right) d^2 + \left(A_1 + \frac{A_3}{4}\right) d_1^2$.
Flanged girder, including strain in the web, with equal flanges	$\frac{(6A + A_3) D^2}{12}$.
Solid elliptic beam	$\frac{\pi E E_1^3}{4}$.
Hollow elliptic beam	$\frac{\pi (E E_1^3 - E_2 E_3^3)}{4}$.

In Table IV. the letters have the following values;—B = breadth of beam, or side of the square; D = depth of beam; A = area of top flange, A_1 = that of bottom, A_2 = area of part of web above the neutral axis, and A_3 that of the part below it; E = horizontal semi-axis, E_1 vertical semi-axis. Having obtained the value of the total moment of resistance of a beam, or the moment of the interior forces, we have now to find that of the exterior forces, and by equating the two, we can arrive at an expression for the breaking weight for each particular form of beam. In Fig. 5387, let A B C E be a solid beam, fixed at one end A E, and unsupported at the other, at which there is a weight W suspended. It is required to find what must be the value of W to break the beam at the line F G. Evidently the force tending to break the beam is equal to the weight multiplied by the leverage, equal to $W \times l$.

5387.

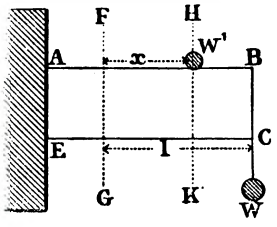

The force resisting this tendency is the moment of the interior forces $= M = \frac{F \times I}{x}$. As these two forces make equilibrium at the line F G, the equation is $W \times l = \frac{F \times 1}{x}$. Taking F to represent the ultimate strain on the unit of area, and to have its maximum value, which it has when $x = \frac{D}{2}$, the equation can be put in a more useful form. Referring to Table IV. for the value of I, for this kind of beam, we have $I = \frac{B D^3}{12}$. Substituting this value, and putting $x = \frac{D}{2}$, we get $W = \frac{F \times B D^2}{6 l}$. As an example. What weight situated at the end of a beam of teak 10 ft. in length, similar to that in Fig. 5387, and 12 in. deep and 4 in. broad, will break it across? From the equation $W = \frac{12050 \times 4 \times 12 \times 12}{6 \times 10 \times 12} = 9640$ lbs. In order therefore to calculate the breaking weight of any solid beam of any particular form in the position in Fig. 5387, the general formula is $W = \frac{F \times I}{l \times x}$, and by substituting the values of I and x, the calculation for each can be made. From this equation is derived the rule for determining the strongest beam that can be cut out of a round log of timber. Let A B C E, in Fig. 5388, be a round log, out of which it is required to cut the beam inscribed, of maximum strength. These conditions are fulfilled when $B D^2$ is a maximum, and also in the diagram, when $C B^2 = B^2 + D^2 =$ also a maximum. Differentiating, we obtain from the first of these $\frac{dB}{dD} = -\frac{2B}{D}$, and from the second $\frac{dB}{dD} = -\frac{D}{B}$, whence

$B = \frac{D}{1{\cdot}41}$. Geometrically, this may be done as follows;—Draw any diameter C B, make $BF = \frac{BC}{3}$, and draw F A perpendicular to B C, to meet the circumference in A. Join A B and A C, and complete the parallelogram.

5388.

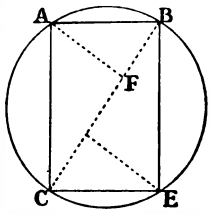

5389.

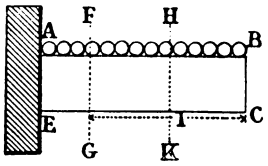

5390.

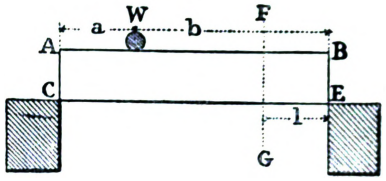

The next case to consider is that of a similar solid girder loaded uniformly, as shown in Fig. 5389. What is the breaking weight at any point F G? It is evident that the weights situated between the line F G, and the fixed end of the beam, have no tendency to fracture it at that line. Also, the sum of the weights situated between the line F G, and the free end of the girder, may be considered to act at their centre of gravity, that is at a distance equal to $\frac{l}{2}$. Let W = the sum of these weights, then $\frac{W\,l}{2}$ is the force tending to break the beam at F G. Equating this as before, with the value of M, we have $\frac{W\,l}{2} = \frac{F \times B\,D^3}{12\,x}$, from which $W = \frac{F \times B\,D^2}{3\,l}$. Since the strength of a beam is directly as the quantity $B\,D^2$, and inversely as the value of l, a beam of uniform strength need not be also of uniform area, as will be seen hereafter. The next general case is that in which a solid beam is supported at both ends, and loaded at any point, as in Fig. 5390. Put W for the weight which would break the beam at any point F G, L for the span of the beam between supports, a and b for the segments into which W divides the beam, and l for the distance of F G from the support, which is the farther from W. On the principles of the lever, the force tending to break the beam at F G is the reaction of the support at E, multiplied by the leverage, or the distance l, which is equal to $\frac{W \times a \times l}{L}$. Putting this equal to M, and since $M = \frac{F \times I}{x}$, we have $\frac{W \times a \times l}{L} = \frac{F \times I}{x} = \frac{F \times B\,D^2 \times L}{6\,a\,l}$. If the weight be at the centre, the breaking weight at that point will be, $W = \frac{2\,F\,B\,D^2}{3\,L}$; for in that case $a = l = \frac{L}{2}$. The same calculation can be made for any other form of beam, by substituting the proper values of I in the general equation $M = \frac{F \times I}{x}$. The last case to be considered is that of a solid beam similarly situated as the last, but loaded uniformly over its whole length, as in Fig. 5391. Put L for the span of the girder, W for the total load, and a and b for the segments into which the line F G, where the breaking strain is required, divides the beam. The forces tending to fracture the beam, are the reaction of the support at A, multiplied by the leverage, minus the weight of the part of the load situated between F G and A, also multiplied by the leverage. The reaction $= \frac{W}{2} = \frac{w\,L}{2}$ when w = load per foot run of the beam, and the leverage $= a$. The other force equals $w\,a \times \frac{a}{2} = \frac{w\,a^2}{2}$, so that the equation is $\frac{w\,L\,a}{2} - \frac{w\,a^2}{2} = \frac{w\,a\,(L - a)}{2}$. But $L - a = b$ and $w = \frac{W}{L}$, so the equation becomes $\frac{W \times a \times b}{2\,L}$. Putting this equal to M, we have

5391.

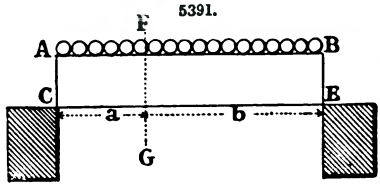

$$\frac{W \times a \times b}{2\,L} = M = \frac{F \times I}{x} = \frac{F \times B\,D^3}{12 \times x}.$$

Solving, we obtain $W = \frac{F \times B\,D^2\,L}{3\,a\,b}$. If the breaking weight be at the centre, $W = \frac{4\,F\,B\,D^2}{3\,L}$, since $a = b = \frac{L}{2}$. Accordingly as we vary the breadth or depth of beams of uniform strength, so will their section vary.

The effect of varying these dimensions, upon the plan and elevation of beams of uniform strength, is shown in Figs. 5392 to 5403. The depth is supposed to be constant in Figs. 5392 to

5397, and the breadth in Figs. 5398 to 5403. The former series of figures will consequently represent the plan and the latter the elevation of the different beams, which are as follows;—Figs. 5392, 5398, a solid beam fixed at one end and loaded at the other. Figs. 5393, 5399, a solid beam or flanged girder, fixed at one end and loaded uniformly. Figs. 5394, 5400, a solid beam supported

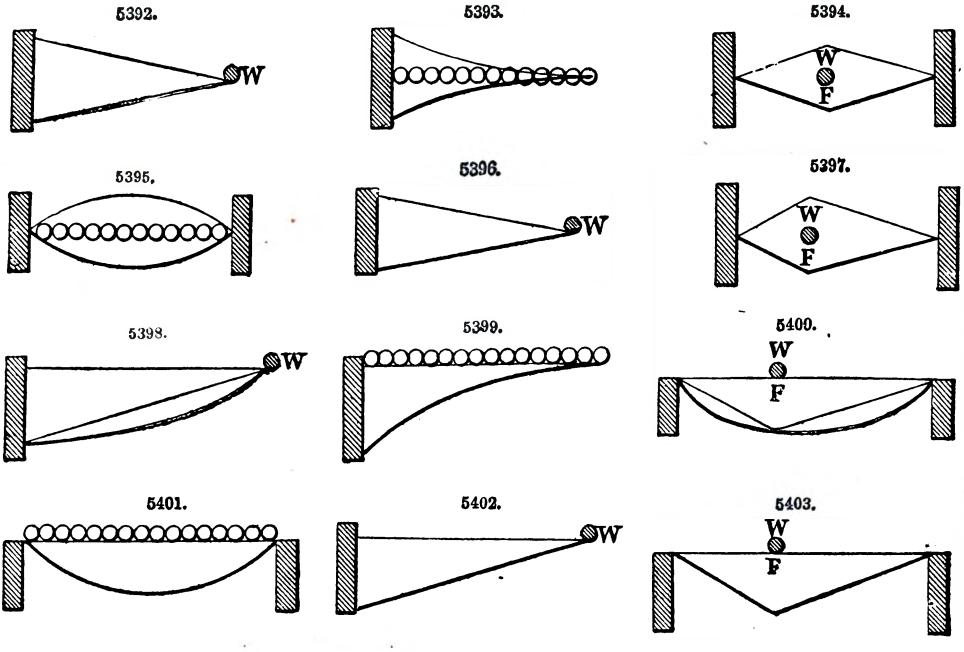

at both ends and loaded at any point F. Figs. 5395, 5401, a solid beam or flanged girder supported at both ends and loaded uniformly. Figs. 5396, 5402, a flanged girder fixed at one end and loaded at the other. Figs. 5397, 5403, a flanged girder supported at both ends and loaded at any point F. When the depth is constant, the plan will vary, and when the breadth is constant, the elevation. If the strength of a beam, fixed at one end and loaded at the other, be represented by unity, that of a similar beam, loaded uniformly, will be represented by 2; that of a similar beam, supported at both ends, and loaded at the centre, by 4; and that of a similar beam, supported at both ends, and loaded uniformly, by 8. A more convenient, and more practical method of calculating the strength of solid rectangular beams, is by using a constant, derived from actual experiment on beams exposed to transverse strain. Let C = this constant. Put W for the breaking weight in lbs., A for the area of the beam, D for its depth, and L for the span, all in inches. Then for the four class of beams we have been considering, taking them in the same order, we have $W = \frac{A \times D \times C}{L}$; $W = \frac{2A \times D \times C}{L}$; $W = \frac{4A \times D \times C}{L}$; $W = \frac{8A \times D \times C}{L}$.

The constant C, which is termed the modulus or coefficient of rupture, is determined by actually breaking a beam of given dimensions of the given material, and of a similar form to that, the strength of which is required. The values of C for various materials are given in Table V., and they are the breaking weights of solid beams fixed at one end and loaded at the other, whose breadth, depth, and length are each equal to 1 in. The general formula for the breaking weight at the centre of any solid beam or flanged girder is, $W = \frac{A \times D \times C}{L}$, in which A is the area in inches of the solid beam, or the area of the bottom flange of the girder, D the depth, and L the distance between the supports in inches, W the breaking weight in tons, and C a constant, also in tons, derived from experiment upon a similar solid beam or flanged girder. The value of C for cast-iron beams of the best form, as shown in Fig. 5404, is 26 tons. *Example.*—What is the breaking weight of a cast-iron girder 20 ft. in span, 18 in. in depth, and having the lower flange 15 in. broad by 1½ in. thick?

5404.

By the formula $W = \frac{22{\cdot}5 \times 1{\cdot}5 \times 26}{20} = 43{\cdot}87$ tons. The area of the bottom flange is to that of the top as 6·5 to 1. In the application of this formula to the beam in Fig. 5404, the value of the vertical part of the beam or web is not taken into consideration. Another formula in which its value is included is $W = \frac{2(d^3 - (b - b_1)d_1^3)}{3 \times D \times L}$, in which W = breaking weight in tons, L = span in feet, and the other dimensions in inches, b = breadth of bottom flange, d = whole depth, b_1 = thickness of web, and d_1 = depth to the inside of the bottom flange. The former has the advantage of simplicity, and is that usually employed. Instead of the breaking weight, the practical problem to be frequently solved, is to find the actual strain upon a girder at any given point, resulting from a weight or weights placed at other points. To take the simplest case, let A B C E in Fig. 5387 be a flanged girder, fixed at one end, and loaded at

any point H K with a weight W_1. Let L = total length of girder, D the depth, and x the distance of the weight W_1 from the line F G, where the strain is required. The force tending to produce rupture at F G is the weight multiplied by the leverage, which equals $W \times x$. The force tending to resist rupture is the strain in either top or bottom flange multiplied by the leverage, which equals $S \times D$. Equating, $W_1 \times x = S \times D$, and $S = \frac{W_1 \times x}{D}$. If the weight be situated at the end of the girder, $x = l$, and $S = \frac{W_1 \times l}{D}$. If the line H K be situated at A E, the leverage is a maximum, and the strain also, which is $S = \frac{W_1 \times L}{D}$. This horizontal strain S is equal in each flange, is tensile in the upper, and compressive in the lower. To find the strain at any point, when the girder is uniformly loaded with a weight W, we proceed as follows;—In Fig. 5389, let A B C E be the girder uniformly loaded. It is required to find the strain at any point F G. The forces on the one side are the sum of the units of weight situated between the line F G, and the free end of the girder, multiplied by the leverage, which is equal to half this distance, equal to $\frac{l}{2}$, and that on the other, as in the former example. Putting w for the unit of weight and equating moments as before, we have $\frac{w \times l^2}{2} = S D$, and $S = \frac{w \times l^2}{2 D}$. When the line F G coincides with A E, $w \times l = W$, and $l = L$, and $S = \frac{W \times L}{2 D}$

TABLE V.—MODULI OF RUPTURE IN LBS. A SQUARE INCH.

Acacia	1,867	Kakarall, Demerara	2,379
Ash, American	1,795	Larch, American	911
„ „ swamp	1,165	„ English	1,335
„ „ black	861	Lignum vitæ	2,013
„ English	2,026	Locust, Demerara	3,430
Beech, American white	1,380	Mahogany, Nassau	1,719
„ „ red	1,739	Mangrove, Bermuda black	1,699
„ English	1,556	„ „ white	1,985
Birch, American black	2,061	Maple, soft Canada	1,694
„ „ yellow	1,335	Norway spar	1,474
„ English	1,928	Oak, Adriatic	1,471
Box, Australian	2,445	„ African	2,523
Bullet-tree, Demerara	2,692	„ American live	1,862
Cabacally	2,518	„ „ red	1,687
Canada balsam	1,123	„ „ white	1,743
Cedar, Bermuda	1,443	„ Dantzic	1,518
„ American white	766	„ English	1,694
„ Guadaloupe	2,044	„ Italian	1,688
Crab, Demerara	1,875	„ Lorraine	1,483
Deal, Christiana	1,562	„ Memel	1,665
Elm, Canada	1,970	Pine, American red	1,527
„ English	782	„ „ pitch	1,727
Fir, Mar forest	1,232	„ „ white	1,229
„ spruce	1,346	„ „ yellow	1,185
„ American black	1,036	„ Archangel	1,370
Greenheart, Demerara	2,615	„ Dantzic	1,426
Hemlock	1,142	„ Memel	1,348
Hickory, American	2,129	„ Prussian	1,445
„ bitter nut	1,465	„ Riga	1,383
Iron bark, Australia	2,288	„ Virginia	1,456
„ cast, small bars	7,616	Poon	1,954
„ „ large „	5,040	Sneeze-wood, South Africa	3,305
„ „ small round bars	4,480	Spotted gum, Australia	2,006
„ wood, Canada	1,800	Stringy bark, Australia	1,818
„ wrought, new bars	8,557	Teak	2,108
„ „ bent and straightened	12,500	Walaba	1,643
„ „ new round	5,040	Yellow-wood, West Indies	2,103

The behaviour of Greenheart, when subjected to a crushing pressure, differs so much from that of other woods under similar conditions, that it deserves to be noticed. The Demerara, or English Guiana Greenheart, is the *Laurus chloroxylon* of botanists, and is also found in Jamaica and the Brazils. It is distinguished as the black and the yellow. The kind usually imported into England is of a deep brownish-yellow colour, with a very close grain and fine polish, and full of extremely minute cells. The concentric rings are scarcely visible, and there is a considerable portion of sap-wood. Greenheart is very hard and flexible, and when loaded to the crushing point behaves as follows;—It supports for a long time the addition of successive weights without evincing any signs of yielding or weakness. But no sooner has the weight reached a certain amount, and become equal to the ultimate strength of the material, than the wood gives way at once with a loud sharp report, and without showing the least premonitory symptom of the coming fracture. After the fracture, the piece presents the appearance of a mass of fibres, without either form or arrangement. The

conclusion to be drawn is that up to a certain point, that is, to very near the crushing weight, Greenheart possesses great tenacity, but becomes suddenly endowed, when that limit is reached, with a brittleness of corresponding magnitude.

The next case is represented in Fig. 5390, in which A B C E is a girder supported at each end, and loaded with a weight W. What is the strain at any point F G? The forces are S × D, and the reaction of the right support, multiplied by the leverage, which gives $S \times D = \frac{W \times a \times l}{L}$; from which $S = \frac{W \times a \times l}{D \times L}$. The maximum strain occurs when W is at the centre, that is, when $a = l = \frac{L}{2}$, and the equation becomes $S = \frac{W \times L}{4 \times D}$

Example.—What is the strain at the centre of a girder having a span of 100 ft. and a depth of 10 ft., resulting from a weight of 20 tons placed at the centre? Here we have W = 20, L = 100, and D = 10; therefore $S = \frac{20 \times 100}{4 \times 10} = 50$ tons.

When the girder is uniformly loaded, the strain at any point may be found as follows;—In Fig. 5391, let the girder be similarly placed as in the last example, and loaded uniformly, and let the strain be required at the point F G, dividing the girder into segments *a* and *b*. The force acting on one side of this line is the reaction at the left abutment, multiplied by the leverage or length of the segment *a*, and that on the other is the strain S, multiplied by its leverage, and the weight of the segment *a*, multiplied by its leverage, which is equal to $\frac{a}{2}$, since it may be considered to act at its centre of gravity. Equating these, we have, putting W_1 for the weight of the segment $\frac{W \times a}{2} = S \times D + \frac{P \times a}{2}$; from which $S = \frac{a}{2}\left\{\frac{W - P}{D}\right)$. But $P = \frac{W \times a}{a + b}$; consequently $S = \frac{a}{2 \times D}\left\{\frac{W(a+b) - Wa}{a+b} = \frac{W \times ab}{2DL}\right.$. The limits of the value of *a* and *b* are *a* = *o*, *b* = L, and $a = b = \frac{L}{2}$. In the former instance, S = *o*, and in the latter, $S = \frac{W \times L}{8 \times D}$. If the different equations relating to these beams and girders be compared, it will be found that a girder fixed at one end and loaded at the other, will only bear half the weight that it will if it be uniformly loaded. Similarly, a girder supported at both ends and loaded at the centre, will only bear half the weight that it will when uniformly loaded. The strains on the flanges are in the same relative proportion.

5405.

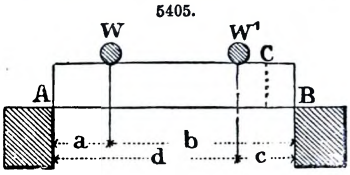

5406.

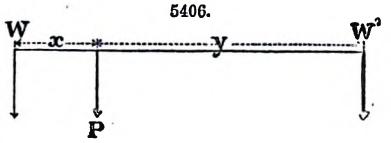

To find the moment tending to break a beam when there are two weights upon it, let A B be the beam in Fig. 5405, loaded with two weights W and W_1, one of which divides the beam into segments *a* and *b*, and the other into *c* and *d*. Let C be the point at which the breaking moment is required. There are two methods of proceeding in this instance. We may either take the separate moments of strain of each weight at the point C, and then add them together for the total moment, or we may find the resultant of the two weights, and proceed upon the assumption that only one weight, equal to the resultant, is placed upon the beam. The strain at C from each weight equals its reaction at B, multiplied by the distance B C. Make B C equal to *e*. The reaction of W equals $\frac{W \times a \times e}{L}$, and that of W_1 equals $\frac{W_1 \times d \times e}{L}$, putting L for the length of the beam between supports, so the total moment at C $= \frac{(W \times a + W_1 \times d)e}{L}$. Making R and R_1 = respectively the reaction of W and W_1, we have for the value of the moment, $M = (R + R_1)e$. To use the other method, the position of the resultant must be first found. In Fig. 5406, let it be at P, and supposing the weights to be unequal, let it divide the distance between the weights into unequal segments *x* and *y*. The proportion is $x : y :: W_1 : W$, or putting *l* for the distance between the weights, $x : l - x :: W_1 : W$; and $x = \frac{W_1 \times l}{(W + W_1)}$, which determines the position of the resultant. Make the resultant equal P, then the moment of strain at C equals $\frac{(P \times e)(x + a)}{L}$.

But $P = W + W_1$ and $x = \frac{W_1 \times l}{W + W_1}$, so that the moment of strain at C equals

$$\frac{(W + W_1)e}{L}\left(\frac{W_1 \times l}{W + W_1} + a\right).$$

Example.—Let the girder be 100 ft. in span, one of the weights equal to 5 tons and the other equal to 10 tons, placed 10 ft. respectively from each end of the girder. What is the moment

of strain at a point 5 ft. from that end of the girder nearest the heavier weight? By the first method, we have $M = \frac{(W a + W_1 d) e}{L} = \frac{(5 \times 10 + 10 \times 90) 5}{100} = 47{\cdot}5$ tons. By the second, $M = \frac{(W + W_1) e}{L} \times \left(\frac{W_1 \times l}{W + W_1} + a \right) = \frac{(5 + 10) 5}{100} \times \left(\frac{10 \times 80}{15} + 10 \right) = \frac{15}{20} \times \frac{190}{3} = 47{\cdot}497$ tons, or the same result as by the former method.

A remarkable instance of a beam being loaded with a couple of weights, occurred in the cross-heads of the presses employed to raise the tubular girders of the Britannia Bridge. The method of finding the moment of strain at any point C in Fig. 5405, by using the resultant of the two weights, will not answer when the point is situated between the weights, whether that point be at the centre or elsewhere. If the two weights are situated upon different sides of the point of strain, they cannot be represented by a single resultant, since the reaction of both abutments must be taken into consideration.

In Fig. 5407, let the moment of strain at the point D be required on the beam A B, uniformly loaded with a load W the foot run. The reaction of the weights to the right of D equals $\frac{W \times b^2}{2L}$, and the moment of strain at D equals $\frac{W \times b^2 \times a}{2L}$. Similarly the moment of strain of the sum of the weights to the left of D equals $\frac{W \times a^2 \times b}{2L}$, so that M, the total moment, is given by the equation $M = \frac{W(ab^2 + a^2 b)}{2L} = \frac{W a b (a + b)}{2L}$. Making W_1 = the total load, and remarking that $(a + b) = L$, and $W_1 = W \times L$, we have $M = \frac{W_1 \times a \times b}{2L}$. There is another method of arriving at the strain upon the point D, which is shorter and simpler than that just described. Since the load is uniformly distributed over the whole beam, the reaction at each abutment is equal to half the total load, and the strain at the point D is equal to the reaction of the half load at the support A, minus the moment of the weights situated between A and D, which acts at the centre of gravity. Using the same notation, we have $M = \frac{W \times L \times a}{2} - \frac{W \times a^2}{2} = \frac{W \times a}{2}(L - a)$. But $(L - a) = b$, and $W = \frac{W_1}{L}$, so that we obtain as before, $M = \frac{W_1 \times a \times b}{2 \times L}$. For the moment at the centre, $a = b = \frac{L}{2}$, and $M = \frac{W_1 \times L}{8}$. Or, as before, $M = \frac{W_1}{2} \times \frac{L}{2} - \frac{W_1}{2} \times \frac{L}{4} = \frac{W_1 \times L}{8}$, thus showing the accuracy of each method.

5407.

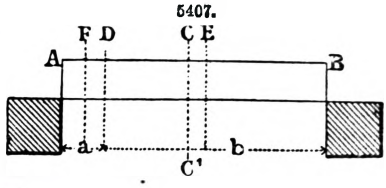

Continuous Beams.—The strength of beams supported at more than two points, or continuous beams, next claims our attention. As the strength of discontinuous beams was determined by the equating of the external and internal forces, so also is the same method followed in the present instance. The general equation for the strength of continuous beams is $M = \frac{E I}{R}$. For discontinuous beams, $M = \frac{F \times I}{x}$; so that $\frac{F}{x} = \frac{E}{R}$. In Fig. 5408, let A B C D represent part of a beam, of which the neutral line is E F, and let it be supposed to be bent in a curve, of which the centre is at T. Draw T P and T L, perpendicular to the neutral line, and dividing the beam into two transverse sections exceedingly close to one another. If we consider J K to be the neutral fibre, it will represent the length of all the fibres in the beam, before it was bent, since it is the only fibre unalterable in length. Put this length equal to l, and l_1 for the difference of length in any other fibre $m n$, after the deflection of the beam. The total length of the fibre $m n$ will now be equal to $(l + l_1)$. If P be the force which extended the fibre $m n$ to a length of $(l + l_1)$, E the modulus of elasticity, and a the sectional area of the fibre, which is supposed to be very small, then $P = \frac{E \times a \times l_1}{l}$. Make the radius of curvature equal to R, and K n equal to d, and by similar triangles, we have T n : $n m$ :: T K : K J, or $(R + d) : n m :: R : K J$. But $n m = (l + l_1)$ and K J $= l$, so $(R + d) : (l + l_1) :: R : l$. From this $\frac{R + d}{R} = \frac{l + l_1}{l}$, and $1 + \frac{d}{R} = 1 + \frac{l_1}{l}$, or $\frac{d}{R} = \frac{l_1}{l}$. Substituting this value of $\frac{l_1}{l}$ in the former equation, we obtain $P = \frac{E \times a \times d}{R}$. The moment of this force is equal to $P \times d = \frac{E \times a \times d^2}{R}$. But the integral of $a d^2$, as was found in deducing the transverse strength of beams, is equal to I; therefore, calling M the moment of all the elastic forces, we have $M = \frac{E \times I}{R}$.

4508.

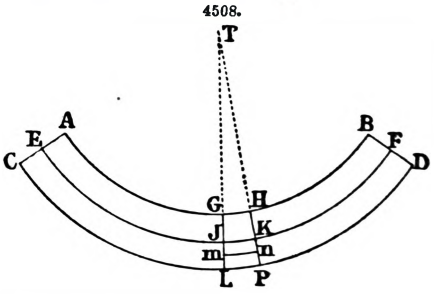

To put this equation in a form adapted for calculation, the value of R is found by the differential

calculus to be equal to $-\frac{1}{\frac{d^2y}{dx^2}}$, on the assumption that the deflection is small in comparison with the length of the curve, which is concave to the axis x. Substituting this value for R, in the equation for M, we have $M = -E \times I \frac{d^2y}{dx^2}$. This is the equation which we shall use in determining the strength of continuous beams, and the deflection of beams generally.

Let A B C, in Fig. 5409, be a continuous beam of two spans. The conditions are that the beam is of uniform section, that the spans are equal, that it is supported by the reaction of the three points A B and C, and that it is uniformly loaded with a weight w over every lineal foot of span. Put L for the length of each span, P for the reaction of the support A, P_1 for that of B, and P_2 for that of C. Let A D $= x$, and D F $= y =$ the deflection at that point, and E_1 and E, the points of contrary flexure, or those points in which the curve changes signs. As before explained, the problem is to find the moments of the external and internal forces upon the beam, and equate them. The latter of these, or the elastic forces, called into play is equal to M, and it remains to determine the former. The part of the beam A F is equilibrated by the reaction of the support A, and the weight uniformly distributed over it, which therefore acts at its centre of gravity. The leverage, with which these forces act, is equal respectively to x and $\frac{x}{2}$, and their moments are $P \times x$ and $\frac{w \times x^2}{2}$. We thus obtain $M = P \times x - \frac{w \times x^2}{2}$, and substituting for M, its value in terms of the moment of inertia of the section, we have $E\,I \frac{d^2y}{dx^2} = \frac{w x^2}{2} - P \times x$. Integrating, this becomes $E\,I \frac{dy}{dx} = \frac{w x^3}{6} - \frac{P \times x^2}{2} \times C$. The value of the constant C is determined from the conditions, that at the centre support B, the tangent to the curve is horizontal, and x is equal to L. Therefore $E\,I \frac{dy}{dx} = \frac{w \times x^3}{6} - \frac{P \times x^2}{2} + \frac{P \times L^2}{2} - \frac{w \times L^3}{6}$. Another integration will give $E\,I \times y = \frac{w \times x^4}{24} - \frac{P \times x^3}{6} + \frac{P \times L^2 \times x}{2} - \frac{w \times L^3 \times x}{6}$. But it will be seen from Fig. 5409, that when $x = L$, $y = o$, so that the equation becomes $\frac{w \times L^4}{24} - \frac{w \times L^4}{6} = \frac{P \times L^3}{6} - \frac{P \times L^3}{2}$, from which $P = \frac{3 \times w \times L}{8}$. But $P_2 = P$ and $P_2 + P_1 + P = 2w \times L$, from which $P_1 = \frac{5w \times L}{4}$. To find the point in the beam between A and E, at which the maximum strain occurs, that is the value of x, we have $P - wx = o$, and $x = \frac{P}{w}$. But $P = \frac{3w \times L}{8}$, so $x = \frac{3L}{8}$. For the position of the points of contrary flexure, it must be borne in mind that the sum of the elastic forces equals zero, or $M = o$. Therefore to find x we have $P = \frac{w \times x}{2}$. Substituting the value already obtained for P, we obtain $x = \frac{3L}{4}$, or, in Fig. 5409, A E $=$ 3 B E.

5409.

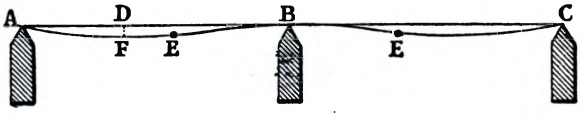

The case of a continuous beam of three spans is shown in Fig. 5410, supported at the four points A, B, C, D, and the same conditions with respect to uniformity of section, equality of span, and rate of loading, are assumed as in the previous example. Put P for the reaction of each of the supports A and D, and P_1 for B and C, and let x and y represent as before the co-ordinates of the deflection curve at any point F G. From the equation of moments, we have $E\,I \frac{d^2y}{dx^2} = \frac{w \times x^2}{2} - P \times x$, and by integration, $E\,I \frac{dy}{dx} = \frac{w \times x^3}{6} - \frac{P \times x^2}{2} + C$. In this instance of three spans, the tangent to the curve is not horizontal at the point B, and $\frac{dy}{dx} = \tan.\ \theta$, when $L = x$. A second integration gives $E\,I\,y = \frac{w \times x^4}{24} - \frac{P \times x^3}{6} + x\left(E\,I \tan.\ \theta - \frac{w \times L^3}{6} + \frac{P \times L^2}{2}\right)$. At the point B, $x = L$, and $y = o$, so we obtain $E\,I \tan.\ \theta = L^2\left(\frac{w \times L}{8} - \frac{P}{3}\right)$. The quantity P still remains to be found, and the simplest method of proceeding is to determine another value for the left-hand side of the equation, and then to reduce and eliminate the value of the separate reactions. Let x and y equal the co-ordinates of the deflection curve at any point of the beam, then equating the forces, we

5410.

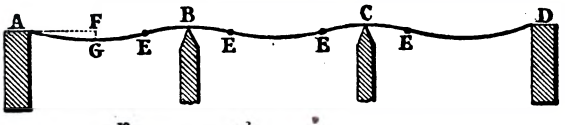

have $EI\frac{d^2y}{dx^2} = \frac{w \times x^2}{2} - P \times x - P_1(x - L)$. When $x = L$, $\frac{dy}{dx} = \tan.\theta$, and integrating again, $EI\frac{dy}{dx} = \frac{w(x^3 - L^3)}{6} - \frac{P(x^2 - L^2)}{2} - \frac{P_1(x - L)^2}{2} + EI\tan.\theta$. At the middle point of the centre span, the deflection curve is horizontal, and $\frac{dy}{dx} = o$, whence

$$EI\tan.\theta = \frac{x - L}{2}(P(x + L) + P_1(x - L)) - \frac{w(x^3 - L^3)}{6}$$

At this point in the centre span, $x = \frac{3L}{2}$, and substituting, $EI\tan. = L^2\left\{\frac{5P + P_1}{8} - \frac{19wL}{48}\right\}$

But the total reaction of the supports equals $2P + 2P_1 = 3wL$, from which $P_1 = \frac{3wL - 2P}{2}$.

We can now proceed to find P. From the two equations for the value of $EI\tan.$, we have $\left(\frac{5P + P_1}{8} - \frac{19wL}{48}\right) = \left(\frac{wL}{8} - \frac{P}{3}\right)$. Substituting and reducing, $P = \frac{2wL}{5}$, and $P_1 = \frac{11wL}{10}$.

Putting in the equation $EI\tan.\theta = L^2\left(\frac{wL}{8} - \frac{P}{3}\right)$, the value for P, we get $EI\tan.\theta = -\frac{wL^3}{120}$

The principle of analysis is the same for a continuous beam of any number of spans, but the complete investigation of the subject is not suited to our pages.

There are several practical points worth attention with respect to continuous beams. In the example shown in Fig. 5409, the greatest strain in each of the side spans is to the strain in the centre span as 9 : 16. The strain in the centre span is equal to that at the centre of a discontinuous beam having an equal span. In Fig. 5410, let S represent the strain at the centre of a discontinuous beam whose span equals L, then the maximum strain in the end spans of the continuous beam equals $\frac{S}{1{\cdot}565}$ at a distance from the end of $\frac{2L}{5}$. The strain over the middle supports equals $0{\cdot}8\,S$, and that at the centre of the middle span equals $\frac{S}{5}$. The position of the points of contrary flexure E from the supports B and C will be in the centre span equal to $0{\cdot}275\,L$, and in the end spans $0{\cdot}20\,L$. If a continuous beam be supported at five points A B C D E, as in Fig. 5411, which represents the length of the centre span as double that of the end ones, the following

5411.

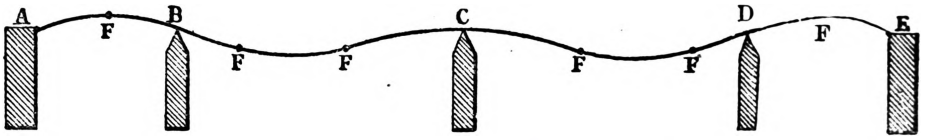

are the conditions of strength. Make S = the strain at the centre of a discontinuous beam having a span equal to 2 L, or equal to that of B C or C D. At B the strain is $\frac{S}{2}$; at C, it equals $\frac{S}{1{\cdot}33}$; at the centre of either of the larger spans the strain equals $\frac{S}{2{\cdot}66}$. The maximum strain in the longer spans occurs at a distance from the supports B and D, equal to $\frac{15L}{16}$, and is equal very nearly to $\frac{S}{2{\cdot}66}$. The position of the points of contrary flexure F, will be, in the longer spans, at a distance from B and D, equal to $0{\cdot}32\,L$, and from C, equal to $0{\cdot}45\,L$. In the end spans, they will be situated at the centre. There is no practical advantage in adopting the principle of continuity, when the span of the beam or girder is small, and the movable load considerable, or in any instance, whatever may be the proportion of span and load, in which the foundations are not of a perfectly stable character. When the load is of a static nature, and moreover constant, there is a manifest economy in adopting it, and also whenever the permanent weight of the girder is considerably in excess of the movable load, as happens in railway bridges of large span. When the movable load is much in excess of the weight of the structure itself, the continual shifting of the position of the points of contrary flexure is attended with many practical disadvantages.

Deflection of Beams.—The deflection of beams of any form, and under any conditions, can be readily deduced from the moments of the internal and external forces, the values of which have been already investigated. We shall determine the deflection of one example in order to show the method to be employed, but the results only of others will be given in Table VI. The case consists of a beam supported at both ends, and loaded uniformly, throughout its whole length. Let L = span of beam, w = unit of load, or load for each lineal foot of span; W = total load = $w \times L$. Put x and y for the co-ordinates of the deflection curve. Make $EI = K$. Then moment of elastic forces $= -K\frac{d^2y}{dx^2}$; and moment of external forces $= \frac{wL \times x}{2} - \frac{w \times x^2}{2}$. Equating these, we have $K\frac{d^2y}{dx^2} = \frac{wx^2}{2} - \frac{wLx}{2}$. Integrating, $K\frac{dy}{dx} = \frac{wx^3}{6} - \frac{wLx^2}{4} + C$. At the centre, where the deflection is a maximum, $\frac{dy}{dx} = o$, and $x = \frac{L}{2}$, so $C = \frac{wL^3}{16} - \frac{wL^3}{48}$, and $K\frac{dy}{dx} = \frac{w}{2}\left(\frac{x^3}{3} - \frac{Lx^2}{2} + \frac{L^3}{12}\right)$.

Another integration gives $K y = \frac{w}{24}(x^4 - 2Lx^3 + L^3 x)$. When the deflection is a maximum, that is at the centre of the beam $y = D$, putting D for the deflection, and $x = \frac{L}{2}$. By substitution, therefore, we get $D = \frac{w L^4}{24 K}\left(\frac{1}{16} - \frac{1}{4} + \frac{1}{2}\right)$, whence $D = \frac{5 w L^4}{384 K}$. But $wL = W$, and $D = \frac{5 W L^3}{384 E I}$.

In finding the actual value of the deflection of any beam, the quantity I must be replaced by its value given in Table IV. This has been done in Table VI., which therefore gives the deflection of beams and girders of different sections, in terms suitable for direct numerical calculation. There are four principal cases of deflection of beams;—1. Beam fixed at one end and loaded at the other. ·2. Beam fixed at one end and loaded uniformly. 3. Beam supported at both ends and loaded at the centre. 4. Beam supported at both ends and loaded uniformly. The deflections in the last three instances may be easily obtained from that of the first, without repeating the whole process of integration and reduction. Let D = the deflection of a solid beam fixed at one end and loaded at the other, and D_1 D_2 D_3 the deflections in the three remaining instances. Then we have the following relations;— $D_1 = \frac{3D}{8}$; $D_2 = \frac{D_1}{6} = \frac{D}{16}$; $D_3 = \frac{5 D_2}{48} = \frac{5 D_1}{288} = \frac{5 D}{768}$. The spans, and rate of loading, are supposed to be constant in all the beams. If the deflection of case 1 be calculated by the formula, $K\frac{d^2 y}{d x^2} = -W(L - x)$ by the rules already laid down, that of the others is obtained by simply multiplying by the proper factor. It is to be noticed, that in continuous beams, the depth exercises no influence upon the position of the points of contrary flexure, or points of inflection, as they are sometimes termed.

Table VI.—Deflection of Beams and Girders.

Description.	Value of D.
Solid rectangular cantilevers loaded at the end	$\frac{4 W L^3}{E B D^3}$.
Solid round cantilevers	$\frac{4 W L^3}{3 E \pi R^4}$.
Hollow ditto ditto	$\frac{4 W L^3}{3 E \pi (R^4 - R_1^4)}$.
Horizontal flanged cantilevers neglecting the web	$\frac{W A L^2}{3 E a a_1 D^2}$.
Ditto taking the web into account	$\frac{4 W L^3}{E (6a + a_2) D^2}$
Square tubes of uniform thickness	$\frac{4 W L^3}{E (B^4 - B_1^4)}$.
Ditto in which the thickness is small compared with B	$\frac{W L^3}{2 E B^3 T}$.
Solid rectangular cantilevers loaded uniformly ..	$\frac{3 W L^3}{2 E B D^3}$.
Solid round cantilevers	$\frac{W L^3}{2 E \pi R^4}$.
Hollow ditto ditto	$\frac{W L^3}{2 E \pi (R^4 - R_1^4)}$.
Horizontal flanged cantilevers neglecting the web	$\frac{W A L^2}{8 E a a_1 D^2}$.
Ditto taking the web into account	$\frac{3 W L^3}{2 E (6a + a_2) D^2}$.
Square tubes of uniform thickness	$\frac{3 W L^3}{2 E (B^4 - B_1^4)}$.
Ditto in which the thickness is small compared with B	$\frac{3 W L^3}{16 E B^3 T}$.
Solid rectangular beams on two supports, and loaded at the centre	$\frac{W L^3}{4 E B D^3}$.
Solid round beams	$\frac{W L^3}{12 E \pi R^4}$.
Hollow round beams of uniform thickness	$\frac{W L^3}{48 E \pi R^3 T}$.
Horizontal flanged beams neglecting the web ..	$\frac{W A L^3}{48 E a a_1 D^2}$.

Table VI.—Deflection of Beams and Girders—*continued.*

Description.	Value of D.
Horizontal flanged beams taking the web into account	$\frac{W L^3}{4 E (6 a + a_2) D^2}$.
Solid rectangular beam on two supports, loaded uniformly	$\frac{5 W L^3}{32 E B D^3}$.
Solid round beam	$\frac{5 W L^3}{96 E \pi R^4}$.
Hollow round beam of uniform thickness	$\frac{5 W L^3}{384 E \pi R^3 T}$.
Horizontal flanged beams not taking the web into account	$\frac{5 A W L^3}{384 E a a_1 D^2}$.
Ditto taking the web into account, and with flanges of equal area	$\frac{5 W L^3}{32 E (6 a + a_2) D^2}$.

In Table VI. the letters signify the same quantities used in determining the strains on beams. $A = a + a_1$ = the sum of the areas of the upper and lower flanges, and a_2 = the area of the web. In the flanged beams the value of D is not that of the total depth of the beam, but only of the web; that is, it is measured from inside to inside of the flanges instead of from outside to outside.

Shearing Strain.—A shearing strain is one which tends to cause the particles of the body to separate by slipping or sliding upon one another. Referring to Fig. 5387, the weight W tends to cause the immediate part of the beam upon which it rests to separate vertically, or shear from the adjoining part, and this tendency is transferred, from point to point, to the fixed extremity of the beam at A E. The shearing strain upon that part of the beam, situated between the weight and the fixed end, is constant for every section of the beam. Calling it S, then S = W. The exact manner in which this strain is propagated throughout the web of a flanged girder is not known, but it has been ascertained that the directions vary, being sometimes diagonal as well as vertical. The probability is that the strain is frequently propagated in curved lines also. If a flanged girder is fixed at one end, and uniformly loaded, the shearing strain at any point, is equal to the sum of the units of weights situated between the point and the end of the girder. If the girder is supported at both ends, and loaded with a weight at any point, the shearing strain, at any point, is equal to the portion of the weight transmitted, on the principle of the lever, to the abutment situated on the opposite side of the point to that at which the weight is placed. If a girder is supported at both ends, and loaded uniformly, the shearing strain at any point is equal to the sum of the units of weight placed between it and the centre of the girder. In solid beams of considerable length, exposed to a transverse strain, failure occurs by the fibres being compressed or extended in a horizontal direction, and the shearing strain, which acts in a vertical direction, is neglected. If we now suppose the beam to become very short, the horizontal strains are proportionally diminished, and at last give place altogether to that of a shearing character. The tendency is no longer to pull the short beam asunder, or to double it up, but to cut it in two.

As the formulæ we have investigated for the strength of beams do not include failure under these conditions, the action of a shearing strain must be considered separately. In using a pair of shears or common scissors, the pin which holds the blades together, is exposed to this strain, so also is the rivet which fixes the blade of a pocket-knife to the handle. With an equal force, and equal area of rivet, the shearing strain in the latter case is double that in the former, as will be easily seen. If the blades of the shears are pulled asunder, they will shear the pin in the middle. One section only will be made, each half of the pin attaching itself to each blade of the shears. But if the blade of the knife be torn away from the handle, it will carry with it the middle part of the rivet, and leave the two ends in each half of the handle. Two sections are made in this instance. In the one case the rivet is said to be in single, and in the other in double shear. The leverage in beams, so short as to be broken by a shearing strain, is practically equal to zero, so that the moment of the force equals the force itself. The strength of any body, or the resistance therefore that it exerts against a shearing strain, is directly proportional to the area of the section exposed to the strain. If T be the ultimate shearing strength of any body, F the force required to shear it across, and A its area in inches, then $F = A \times T$. It is not necessary to give a table of the values of T for different materials, as they may be considered, for all practical purposes, to be equal to those given in Table II. for the ultimate tensile strengths. Experiment has established this approximate identity. Care must be taken, in making use of this formula, that the whole of the sectional area is exposed, at one and the same time, to the action of the shearing strain. This is always ensured in engineering structures, but machines are frequently constructed to act differently. Shearing machines are made so as to exert their force in detail, and in this respect differ from punching machines, which cut the whole piece out at the first operation. Numerous experiments afford the following average shearing strain for wrought iron. Punching plate iron 24·6 tons; punching hammered scrap-iron 20·9 tons; shearing hammered scrap-bars and rolled iron 22·1 tons. The mean result of the experiments, made during the erection of the Britannia and Conway tubular bridges, gave 23·3 tons a square inch as the shearing strain of rivet iron of good quality. As the ultimate tensile strength of the same iron was found to be 24 tons, the resistance to a tensile and shearing strain may be regarded as practically identical. This identity is not universal. If the tensile strength of steel is represented by unity, its shearing strength equals 0·738 ton for each square inch of section. Experience has also proved that it requires a third more pressure to shear wrought iron than copper. Fir will shear in the direction of the grain with less than one-twentieth

of the force that will tear it asunder. With respect to the shearing strength of oak treenails, it is to be observed that the thickness of the planks through which they pass influences the amount—the thicker the plank the greater the strength. About 2 tons to the square inch is the average force required to shear treenails of English oak.

In Figs. 5412, 5413, 5414, a rivet is shown in single, double, and treble shear, and the strength of each joint is in corresponding proportion. If C is the ultimate shearing strength of the material, N the number of the plates through which a pin or rivet passes, A its sectional area in inches, then, calling the shearing strain of the rivet S, we have $S = A\ C\ (N - 1)$. Large holes, that is, large sections of iron, are sheared with less force than punched, and although it appears somewhat paradoxical, thin plates require a proportionally greater force to punch them than thick ones. The form of the blade of the shearing machine has considerable influence upon the force required, especially in relation to the position of the bar to be sheared, which is not a matter of indifference. Suppose a bar, 3 in. in breadth and ½ in. in thickness, in which position will it shear the most readily, edgeways or on the flat? If the shearing blades be parallel, the bar will shear with equal facility in either position. If they be inclined, the bar placed on the flat will shear with four-fifths of the force which is required if it be placed on the edge. When the bar is on its edge, the force required with parallel blades is to that with inclined as 110 to 100, and when on the flat as 125 to 100.

5412.

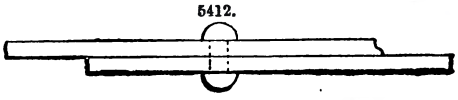

5413.

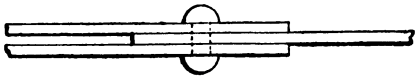

5414.

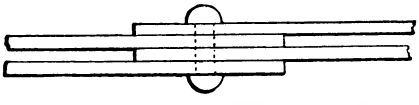

That the resistance to shearing is proportional to the area of the cross-section of the body, is proved mathematically as follows;—Let d be the original distance between two cross-sections of a prismatic body, extremely close to one another, and let one of these sections be supposed to be fixed, and the other to slide in a vertical plane, relatively to the other. This sliding motion will be constant for all the points in the cross-section, and may be represented by m. Any small particle of the sliding section, which put equal to a, will, in consequence of the elastic power of the material, tend to return to its original position in the plane of section. The force it will develop in so doing is proportional to a, and also proportional to the relative sliding motion, and the original distance between the two vertical planes of section. Make F equal to this force, and putting C for a constant varying with the nature of the material, we have $F = \frac{C \times m \times a}{d}$. The constant C is the coefficient of shearing, and has been already referred to. As F is the force which tends to prevent the sliding of a particle a in the plane of section, and as all the forces acting upon the whole cross-section are parallel to each other, they may be represented by a single force, which is their resultant. Calling this force R, and assuming C to be constant for the whole cross-section,

$$R = \frac{C \times m}{d} \int a.$$

A common instance of a shearing strain, or, as it is sometimes called, a strain of detrusion, is shown in Fig. 5415, in which A B is the end of the tie-beam of a roof, and C the foot of the rafter let into it. The thrust of the rafter may be resolved into two directions, one vertical, and the other horizontal. The former is equilibrated by the vertical reaction of the abutment, and the latter by the resistance of the end of the tie-beam. The tendency is evidently to shear, or slice off, the piece of the tie-beam between the foot of the rafter and A, having a breadth equal to that of the tie-beam, and a depth equal to that of the distance which the rafter penetrates. Making B equal breadth of beam, T the horizontal thrust of the rafter, and D the distance from the foot of the rafter to the end of the tie-beam, then, when the material is oak, $D = \frac{T}{575\ B}$, and, when fir, $D = \frac{T}{150\ B}$. In practice the strain is provided for, either by connecting the rafter and tie-beam with a strap or with a bolt.

5415.

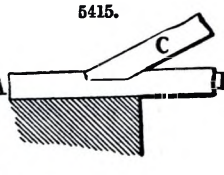

Strain of Torsion.—The last strain to be considered, with reference to our subject, is that of torsion, which has considerable influence, as will be seen, on the strength and shape of the axles of railway carriages and locomotives. The strength of a prismatic body to resist a strain of torsion, will depend partly upon its moment of inertia, and partly upon the value of a constant, to be determined for each material. If we consider two cross-sections of the body, which is supposed to be homogeneous, to be very close to each other, the moment of the exterior torsional forces will tend to cause one of these sections to rotate relatively to the other, about their common axis. Let one of these sections be regarded as fixed, then any point in the other will be twisted through a certain angle. If d be the distance of the point from the axis of the prism, and θ the circular measure of the angle of torsion, the angular displacement of the particle will be equal to $d\ \theta$. If D be the distance between the original cross-sections, the displacement of the whole fibre, of which the particle under consideration may be regarded as the extreme end, relatively to D is equal to $\frac{d\ \theta}{D}$. Experiment has proved that the resistance of a fibre to torsion is proportional to its area, and to $\frac{d\ \theta}{D}$. Put A for the

area of the fibre, C for the value of the constant, and R for the resistance of the fibre, then $R = \frac{C \times A \times d\theta}{D}$, and the moment of this resistance equals $R \times d$. Make this equal M, then $M = \frac{C \times A \times d^2\theta}{D}$, and the sum of all the moments in the whole cross-section will equal $\frac{C \times \theta}{D} \int a\, d^2$. But from Table IV., in which is given the strength of beams of various forms, the expression $\int a\, d^2$, which is known as the moment of polar inertia, is the moment of inertia of a cross-section of a homogeneous prism about an axis, passing through its centre of gravity, and perpendicular to its plane. Designating it by its proper symbol I, we have $M = \frac{C \times \theta \times I}{D}$. Calling M_1 the moment of the exterior forces tending to produce torsion, we have $M_1 = M = \frac{C \times \theta \times I}{D}$. This is the general equation of equilibrium for the exterior forces, and the resistance to torsion for each cross-section of a homogeneous prism.

A more important case, in at least a practical point of view, to investigate, is that of a cylindrical beam or rod, under a strain of torsion. Let A B, in Fig. 5416, represent a cylindrical beam which is acted upon by a force F, which tends to twist it round its axis. If we suppose all the cross-sections of the shaft, from one end to the other, to be fixed, it is evident that the torsional strain must be transmitted throughout them successively, and each one will only be subjected to the strain after the next one, nearest the end of the beam at which the force is applied, has been caused to rotate. Before the extremity A can move, the whole length of the shaft must be undergoing strain. In Fig. 5417, let a cylinder under a torsional strain be represented in projection on the two planes A G H B D E C, J *p r* K, which are perpendicular to one another. If the particle D at one end of the cylinder begins to move, it will arrive at a certain point A before the particle L, at the other extremity, has moved at all. Suppose that L begins to move when D arrives at A; then the line D L, or the generating line of the cylinder, has been twisted into the thread of a screw. Let D E C A and L *m n p* be the projections of the thread on the two planes respectively. Similarly the particles D *t* and D *v* have taken up the positions represented by C *n* and E *s*, and the sections *p r*, *n v*, *m* L, have been turned through the angles of torsion D F A, D F C, and D F E. If θ be the angle of torsion for the whole cylinder, and L the length of the cylinder, we have for the moment of the exterior forces $M = \frac{C \times \theta I}{L}$, or, by transposition, $\theta = \frac{L \times M}{C \times I}$. Taking C and I as constant for the same material, and same cross-sections of shaft, the angle of torsion is directly proportional to the force of torsion, and the length of the shaft or rod. Putting R for the radius of the cylinder, the value of I is $\frac{\pi R^4}{2}$, so that the equation may be written $M = \frac{C \times \theta \times \pi R^4}{2L}$ for solid cylinders, and for hollow, $M = \frac{C \times \theta \times \pi}{2L}(R^4 - R_1^4)$, in which R and R are the external and internal radii. The following are the values of C for different materials in tons to the square inch.

5416.

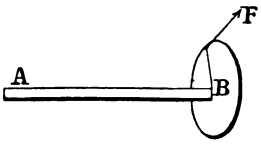

5417.

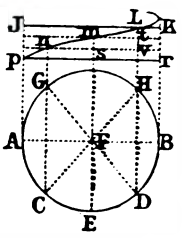

TABLE VII.

Material.	Value of C in tons.	Material.	Value of C in tons.
Wrought iron	3810	Bronze	700
Iron in bars	4232	Copper	2800
German steel	3810	Fir	275
Cast iron	1270	Oak	254
Cast steel	6350		

As a practical example of the force of torsion, the following experiment was carried out. A cylindrical rod of forged iron 9·2 ft. in length, and 0·57 in. in diameter, was subjected to a strain of torsion, produced by a weight of 22·5 lbs., acting at the end of a lever 13 in. in length. Before the rod broke, it was twisted through an angle of torsion equal to 13 4 degrees. A cast-iron cylindrical bar, having a length of 4·92 ft., and a diameter of 4 in., was acted upon by a weight of 3690 lbs. at the end of a lever 6·56 ft. in length, and was twisted through an angle of torsion of 15 degrees. When the weight was increased to 4680 lbs., the angle increased to 20·25 degrees, and the bar broke at last with a weight of 4905 lbs. This experiment bears out the statement that the angle of torsion is proportional to the force of torsion, since 15 × 4905 equals 20·25 × 3690 sufficiently closely to corroborate the theory. When considerable masses are put in

motion, the effect of torsion is often observable to the eye, more especially when the motion is transmitted and multiplied from one piece of machinery to another. A prime mover can frequently be observed in motion, before some more distant part of the machine is set going. From numerous experiments on torsion, the weight which will twist asunder a cylindrical bar of wrought iron of good quality, 1 in. in diameter, acting at the end of a lever 1 ft. in length, is 1000 lbs. For wrought iron of ordinary quality, this weight should not be taken greater than 800 lbs. For cast iron of good quality it may be taken to be 700 lbs. It should be remarked here that if the torsional force applied, exceeds the limit of elasticity of the material, a permanent twist will be the result. This might be inferred, from what has been already stated respecting the permanent set of materials under a strain of tension. If S be the strength of a standard bar, having a diameter of 1 in., and S_1 that of any other bar having a diameter equal to D, we have $S_1 = S \times D^3$, and if P be the resistance of any bar, W the weight, and R the radius of the lever at the end of which it acts, then $P = \frac{W}{R}$. In Table VIII. the relative strength of several materials to resist torsion is given, wrought iron being taken equal to unity. In many instances the stiffness of shafts and bars under torsion, is of more importance than their absolute strength. The torsional stiffness of shafts varies as $\frac{D^4}{L}$, in which D is the diameter, and L the length. In practice, the diameter of long shafts is always in excess of that which is absolutely required to resist torsion. If it were not so, it would be impossible to get the machinery to work smoothly and steadily.

TABLE VIII.

Wrought iron	1·00	Copper	0·43
Brass	0·46	Gun-metal	0·50
Cast iron	0·90	Lead	0·10
Cast steel	1·95	Tin	0·14

Railway Axles.—The most prominent example in practice of the effect of torsion is to be found in the case of railway axles. An accident which occurred recently on one of the English railways, demonstrated the startling fact that the proper form of axles was not known to the company. We shall first investigate the question of the strength of axles, and then refer to the accident, and point out the improved form which has since been adopted. Whenever the vertical pressures acting upon the journals of an axle are equal, and the corresponding reactions of the rails, all the cross-sections between the wheels undergo a uniform strain, if the weight of the axle itself is neglected. If P be the pressure upon the journal, and L the distance between the centre of the wheel-bed and a vertical plane, passing through the centre of the rail, then the moment of the force equals $P \times L$. It follows from this, that if the axle were always subjected to a uniform load, each cross-section would undergo the same strain, and the correct shape of the axle would be cylindrical. But experience has proved that axles never break in the middle, but always either at the journals or just behind the wheel-bed. At these points, therefore, the strain is evidently greater than at others, and the conclusion to be arrived at is, that the cross-section of the axle may be reduced beyond these points. It can be readily shown mathematically, that so long as the pressures upon an axle are vertical, the true form is the cylindrical. In Fig. 5418 let A and B be the cross-sections through the nave of a pair of wheels, showing the axle lying in its bearings. Let P and P_1 equal the pressure upon the journals, R and R_1 the corresponding reaction of the rails, L the distance from the centre of one rail to that of the other, d the distance from the centre of the journals to the vertical plane, passing through the centre of the rail-head, and m the distance from this plane to the inside edge of the wheel-bed. Neglecting the weight of the axle itself, and considering the rails as the points of support, the equations of equilibrium are $R \times L = P(L + d) - P_1 \times d$, and $R_1 \times L = P_1(L + d) - P \times d$, from which $R = P + \frac{d}{L}(P - P_1)$ and $R_1 = P_1 - \frac{d}{L}(P - P_1)$. Putting M for the moment of flexure for the section of the axle nearest the inner edge of the wheel-bed, we have $M = P_1(d + m) - R_1 \times m$. Substituting for R_1 its value already found, we get $M = P_1 \times d + (P - P_1)\frac{m \times d}{L}$. Similarly, the moment M_1 of the section behind the wheel-bed is $M_1 = P(d + m) - R \times m$, and substituting for R its value, we have $M_1 = P \times d - (P - P_1)\frac{m \times d}{L}$. If M_2 be the moment of flexure at the centre of the axle, $M_2 = P\left(\frac{L}{2} + d\right) - R\frac{L}{2}$, and substituting for R its value, the equation becomes $M_2 = \left(\frac{P + P_1}{2}\right) \times d$. If $P = P_1$, then $M_2 = M_1 = M\,P \times d$, and there is no reason for making any one cross-section of the axle different from the other.

Let us now take another condition in which an axle is constantly placed. Suppose that in Fig. 5419 the flange of one of the wheels A grinds the rail. Immediately a pressure is created upon the wheel, which acts horizontally and parallel to the axle, and tends to throw the carriage towards the centre of the track. Call this pressure Q. But at the same time, the weight of the carriage tends to restore it to its original position, with a force acting in the opposite direction, the point of application of which is situated at the centre of gravity of the whole wagon and load bearing upon the axle. Call this force Q_1, and let it act at the point C, placed at a height H above the centre of the axle. The force Q is composed of two others $q + q_1$, the former of which acts at a point C_1, at a height of H_1 above the centre of the axle, and the latter

at the centre of the axle itself. The forces q and q_1 are to one another as the pressures P and P_1. The force q acting at the point C_1 is transmitted to the axle by the frame and springs of the

5419.

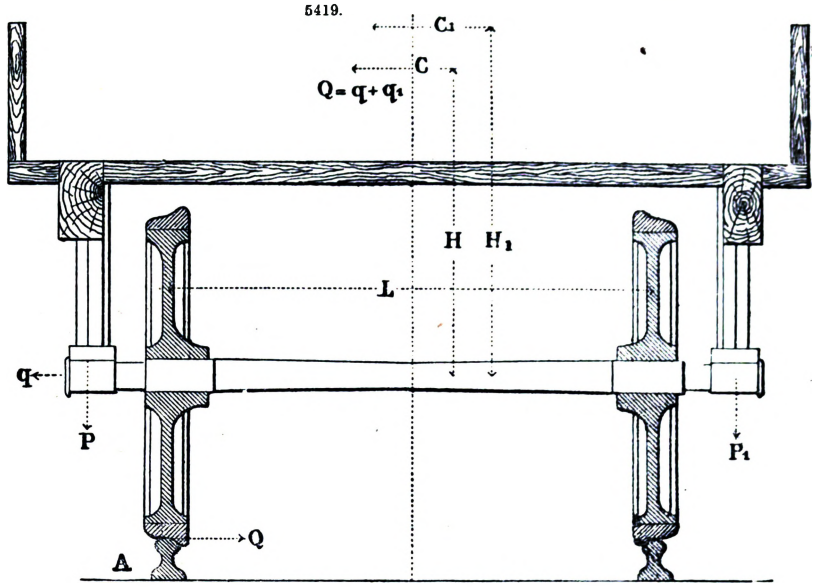

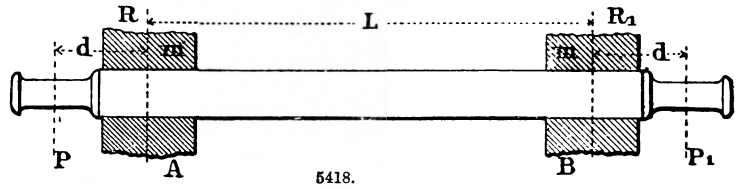

5418.

carriage, so that the axle has to support not only the normal load $P + P_1$, but also the reaction due to the force q, which tends to push the carriage outward. Let this reaction be supposed to act upon the journal in the wheel A, and put it equal to r. It will be understood that at the journal in the opposite wheel B, the value of r, instead of being added, will be subtracted from the load. Using the same notation as before, we have, in order to find the two forces, $P + r$ and $P - r$, which act along the whole length of the axle, $r(L + 2d) = q \times H_1$, when $r = \frac{q \times H_1}{L + 2d}$. The pressure at A will be $P + \frac{q \times H_1}{L + 2d}$, and at B, $P - \frac{q \times H_1}{L + 2d}$. In order to determine the reactions R and R_1 of the rails which are transmitted to the axles by the wheels, it must be observed that, in addition to the vertical pressures P and P_1 upon the journals, there are a couple of horizontal forces Q Q to be taken into account. Putting y for the radius of the wheel, the moment of each of these forces is $Q \times y$. But there exists at the centre of gravity C, a horizontal force $Q = q + q_1$, the moment of which is $y + H$, so that we have $Q(y + H) = Q y + q H_1$. The action of this couple increases the pressure upon the wheel A, and diminishes it on B, by a certain quantity, which put equal to t. To find t we have $t \times L = Q(y + H) = Q y + q H_1$; whence $t = \frac{Q y + q H_1}{L}$, and the reactions R and R_1 are given by the equations $R = P + t = P + \frac{Q y + q H_1}{L}$ and

$$R_1 = P - t = P - \frac{Q y + q H_1}{L}.$$

There are thus six forces acting upon the axle, the two vertical pressures P and P_1 acting downwards, the two reactions R and R_1 acting upwards, and the horizontal forces, the moment of which is $Q \times y$. Under the action of these six forces, which together make equilibrium, the axle has to resist not merely a bending strain, but a strain of torsion as well, which acts throughout its whole length, the mathematical axis of which does not pass through the centre of gravity at all the cross-sections. The bending moments for the three principal points in the axle may be thus found. For the cross-section just behind the wheel-bed of B,

$$M = P_1(d + m) - R_1 m = (P - r)d + (t - r)m.$$

For the section at the middle,

$$M_1 = P_1\left(d + \frac{L}{2}\right) - R_1 \frac{L}{2} = (P - r)d + (t - r)\frac{L}{2}.$$

For the section behind the wheel-bed at A,

$$M_2 = P_1(d + L - m) - R_1(L - m) = (P - r)d + (t + r)(L - m).$$

This last moment is therefore the greatest, and the moment of the middle section is the mean between the other two, increased by the quantity $\frac{Q\,y}{2}$, in order to take into account the horizontal force. We thus see that the bending moment and the total strain are greatest at the section just behind the wheel-bed, which is known as the dangerous section. It must be concluded, therefore, that the cylindrical form is not the correct form to adopt, in order to produce an axle of uniform strength. The correct form may be thus arrived at;—Divide the distance extending from the middle of the axle, to the vertical plane passing through the centre of the rail-head, into five parts. Make D = the diameter of the middle part of the axle at 0, $D_1 = 1{\cdot}0417$ D at 1, $D_2 = 1{\cdot}0804$ D at 2, $D_3 = 1{\cdot}1162$ D at 3, $D_4 = 1{\cdot}1501$ D at 4, and $D_5 = 1{\cdot}1821$ D at 5.

The accident which led to the adoption of the correct form of axle by the North-Eastern Railway Company occurred in September of 1872, and formed, as is the rule in such cases, the subject of an inquiry by the Board of Trade. The history of the accident, as well as the conclusions drawn, therefore, are full of interest, and have an intimate bearing upon our subject. The elevation and sections of the broken axle are shown in Figs. 5420, 5421, and the form subsequently adopted by the company is represented in Fig. 5422.

5420.

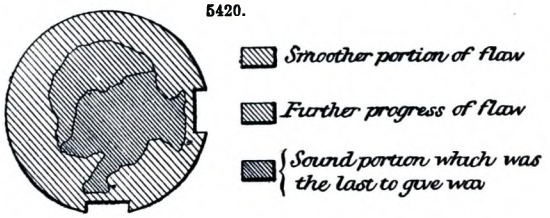

5421.

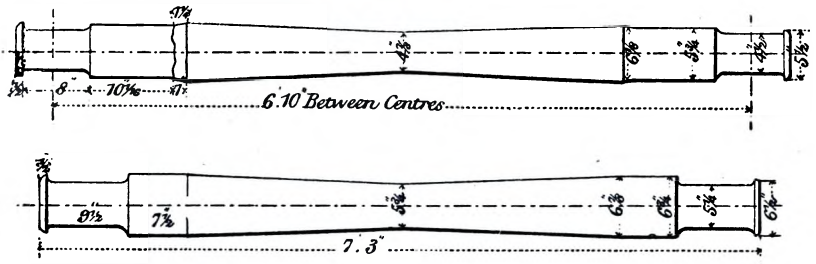

5422.

As the second express train leaving London at 10.10 A.M., and Newcastle at 5 15 P.M., for Edinburgh, was passing between the above two stations, the trailing axle of the tender of No. 250 engine suddenly gave way. The leading van and a first-class carriage were, in the first instance, and three third-class carriages were afterwards, thrown off the rails.

The train in question consisted of an engine and tender, seven passenger carriages, a mail-van, and two brake-vans.

After stopping at Morpeth, Bilton, and Belford, and leaving one of the carriages at Morpeth, the engine-driver proceeded forward. He ran through the Beal Station at a speed from 40 to 45 miles an hour, and he kept up about the same speed until, in passing a point a mile and a half north of Beal, and 8 miles north of Belford, he felt his engine run very uneasily. He shut off his steam, and looked round, and saw fire flying from the back of the tender. His fireman applied the tender-brake, and he applied the brake which was attached to his engine; but not tightly, because he was afraid of pulling up too suddenly. He ran on, reducing his speed at first to about 15 or 20 miles an hour, and then pulling up at about 600 yds. from the point at which his tender first left the rails. He was going on pretty steadily, when the wheels dropped from under the tender, the tender reared up, and the brake-van became uncoupled. The engine and tender then went on by themselves for about 50 yds. before they were brought to a stand, and the carriages came to a stand about 10 or 15 yds. behind the tender. On examination it was then found that the engine was on the line with all its wheels, and the tender with its leading and middle wheels; but the axle of the trailing wheels having been broken, one wheel of the tender lay under the carriages, while the other wheel, with a portion of the axle still in it, lay under the tender. As regards the van and carriages, the van No. 50, East Coast rolling stock, was off the rails with two of its wheels, an East Coast carriage, No. 7, was off the rails with its leading wheels, a third-class carriage, No. 60, was off its four wheels, a third-class carriage, No. 40, was off with two wheels, and the tender-wheel, above referred to, lay under the tender.

The other vehicles of the train, consisting of the mail-van, two carriages, and the rear van, remained on the line. There was a hole knocked in the bottom of the tender by a blow from the loose wheel, and some damage done to the carriages by the bending of the axles; but in other respects the carriages were not much damaged. The dimensions of the axle which thus gave way are shown in Fig. 5421. It measured 6 ft. 10 in. long between the centres of the journals, $4\frac{3}{8}$ in. in diameter in the middle, $6\frac{1}{8}$ in. in diameter outside of the wheel-bed. $5\frac{3}{4}$ in. in diameter inside of the wheel-bed. It was found to have given way, as shown in the diagram, at $1\frac{1}{4}$ in. inside of the wheel-bed.

The fracture occurred, as in most of these cases, at the point where the diameter changes. The flaw had been produced gradually by the constant action, for a series of years, during the running of the tender. Having been inside of the wheel-bed it was not visible to outward examination, and the fracture would not be discovered until the wheel was separated from the axle. The axle was again broken at the shops of the company at Gateshead, and found to be of excellent quality. It bent very considerably before fracture could be obtained, and it was found necessary then to nick it before it could be broken. The engine, No. 250, was an express engine, with the driving and trailing wheels coupled together. These wheels were 6 ft. 6 in. in diameter, and the leading wheels were 4 ft. 6 in. in diameter. The weight on the leading wheels was 9 tons, the trailing wheels 10 tons 10 cwt., and on the driving wheels 14 tons 10 cwt., making a total of 34 tons with the engine in working order. The diameter of the cylinders was 16 in , with a stroke of 24 in. The wheel-base measured 7 ft. 10½ in. from leading to driving, and 8 ft. from driving to trailing wheels.

The tender-wheels were 3 ft. 6 in. in diameter, and the wheel-base measured from leading to middle wheels 6 ft., and middle to trailing wheels also 6 ft. The tank was constructed to hold 2000 gallons of water. The weights on the tender were as follows;—Leading wheels 8 tons, middle wheels 8 tons 10 cwt., trailing wheels 7 tons 15 cwt.; total, 24 tons 5 cwt. The total mileage run by this tender, and also by this axle, was 150,918 miles, from January, 1868, until 13th September, 1872.

On further examination after the accident, similar flaws were detected in the other axles of this tender, both of which were taken out and condemned as unfit for further use.

The remedy by which accidents of this nature may be prevented is perfectly simple. It is by so constructing the axles, with enlarged dimensions at the wheel-beds and at the journals, and smaller dimensions proportionately towards the middle, in order that when fractures occur, which must be the case occasionally, this fracture may be visible to outward observation, instead of occurring in the wheel-beds, in places where they cannot be seen. Fig. 5422 shows the alterations the company have made, in order to carry out these conditions in all axles which they construct in future. Another point necessary to be attended to is the selection of good material, and the tight and proper fitting of the wheels upon the axles.

For the want of tightness in this particular instance, and in most other cases, the flaws have occurred principally opposite the beds of the keys, by which the wheel was kept in its place upon the axle. If the wheel and axle had been so fixed together as to be practically one whilst running, the fracture under notice would probably have occurred, even in this case, and with this form of axle, outside of the wheel, and therefore open to observation.

On the portion of line where this accident occurred the gradient was rising 1 in 240.

We cannot conclude this portion of our subject, without drawing attention to the great advantage possessed by cast steel in all instances of construction, in which a strain of torsion is to be resisted. This material is especially adapted for the manufacture of railway axles, since it will withstand a bending and a breaking strain of double the amount which wrought iron can sustain. The relative diameters of two axles, one of cast steel and the other of wrought iron, will be $\sqrt[3]{1} : \sqrt[3]{2}$, or nearly as 4 : 5, and the relative weights as 0·63 : 1. The loads being equal, an axle of cast steel will have only five-eighths of the weight of one of wrought iron, and yet do the same work. Another advantage resulting from the employment of cast steel in axles, is that the journals may be made a great deal smaller. The diameter of the journal of a cast-steel axle is to that of one of wrought iron as 0·707 : 1. This reduction in the diameter is partly owing to the fact, that under a given pressure, steel journals heat less rapidly than those of wrought iron. Moreover, the smaller the diameter of the journals, compared with that of the wheels, the easier the haulage. It will be manifest from our remarks on the shearing strain of materials, that the edges of the wheel-beds are very much exposed to a strain of that character. In practice this liability is very much mitigated by rounding off the edges of the wheel bearings, so as to bring the pressure nearer the centre of the bearing surface. The testing of the strength of axles is frequently accomplished by the hydraulic press. An example tested at Berlin was submitted to a pressure of 410 atmospheres, when the body of the press gave way, and the trial was left unfinished.

Working Load.—The actual load which is placed, in practice, upon any single beam or compound structure is considerably less than that which would break it. The proportion which this load, or working load as it is technically called, should bear to the ultimate strength of the material, has long been an undecided question. Engineers are still far from unanimous on the point. The extreme limits have been put at 3 and 10. The proportion, moreover, depends not only upon the absolute breaking strength of the material, but also upon the particular conditions under which the body is placed. Manifestly, a beam which would safely carry 10 tons placed gradually and gently upon the centre, would not bear the same load let fall upon it, from a height of 10 or 12 ft. The proportion which the safe working load, or the load applied in practice to any material, bears to the ultimate strength of the material, is called the fraction of safety. The values of this fraction are given in Table IX. for different materials under different specified conditions, in fractional parts of the ultimate or breaking strength. In applying these values of the fraction of safety, care must be taken to employ the ultimate strength corresponding to the strain to which the material is subjected. The nature of the strain which the material undergoes must be first ascertained, and then the proper fraction of safety applied to the calculation. The factor of safety is the inverse of the values given in Table IX. Thus the factor of safety for a pillar of wrought iron not subject to vibration is 4. The rule of the Board of Trade allows for railway girders, a working tensile strain of 1·25 ton to the square inch, and a compressive strain of 6·0 tons on the same unit for good cast iron. The structure is supposed to be secured from deflection. The rule is as follows;—In a cast-iron bridge, the breaking weight of the girders shall not be less than three times the permanent load, due to the weight of the superstructure, plus six times the greatest moving load that can be brought upon it. In practice, engineers modify this rule a little, and design cast-iron girders to bear a breaking weight of six times the total load, or six times the

permanent load, plus six times the greatest moving load. For wrought-iron railway bridges, the rule of the Board of Trade is;—In a wrought-iron bridge, the greatest load which can be brought upon it, plus the weight of the superstructure, shall not produce a greater strain upon any part of the material than 5 tons to the square inch. This is tantamount to assuming that one-fourth of the breaking strain for wrought-iron girders subject to vibration is the safe working strain, and this is the proportion adopted by English engineers. The French rule is that the safe working strain shall not exceed 3·81 tons to the square inch, which would make the ratio as 5·25 to 1. In Table IX. the values given for steel are derived from very imperfect data, our experience with regard to the use of that material as a constructive agent being still very limited. For the safe working load on timber piles, driven into the ground, experience has shown that 1000 lbs. to the square inch of the head of the pile may be allowed, and about one-fifth of this amount for piles driven into soft ground, and having comparatively but little hold.

TABLE IX.—VALUES OF THE FRACTIONS OF SAFETY FOR DIFFERENT MATERIALS.

How Situated.	Fraction.
Cast Iron.	
Pillar not subject to vibration or impact	$\frac{1}{5}$
„ subject „ „	$\frac{1}{10}$
Beam or girder subject to vibration and impact, such as a railway-bridge girder	$\frac{1}{6}$
Beam or girder not subject to vibration	$\frac{1}{4}$
„ „ subject to sudden shocks as in cranes and machinery	$\frac{1}{8}$
Wrought Iron.	
Pillar not subject to vibration	$\frac{1}{4}$
„ subject „	$\frac{1}{6}$
„ subject to direct and sudden shocks	$\frac{1}{10}$
Boiler-work	$\frac{1}{8}$
Chains	$\frac{1}{6}$
Wire rope, round	$\frac{1}{7}$
„ flat	$\frac{1}{9}$
Beam or girder subject to vibration	$\frac{1}{4}$
Beam or girder not subject to vibration	$\frac{1}{3}$
„ „ subject to sudden and violent shocks	$\frac{1}{6}$
Steel.	
Plates under a tensile strain	$\frac{1}{4}$
Pillars not subject to any flexure	$\frac{1}{4}$
Timber.	
Posts and pillars	$\frac{1}{10}$
„ used for temporary works	$\frac{1}{4}$
Piles when fixed in the earth	$\frac{1}{10}$
In bridges and permanent structures	$\frac{1}{10}$
Brickwork, stone, concrete, and rubble masonry	$\frac{1}{6}$
Ashlar and cut stone in pillars and ring-pens	$\frac{1}{20}$
Common mortar	$\frac{1}{10}$
Cordage	$\frac{1}{4}$

Rolled Iron Beams.—There are two classes of beams which remain to be mentioned, namely, the wrought-iron rolled beam and the flitch or composite beam. The former is shown in Figs. 5423 to 5433, and consists of an upper and lower flange of equal sectional area and a vertical rib. The

5423.

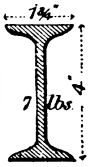

Span.	Distributed Safe Load.
feet.	tons.
6	2·0
8	1·7
10	1·4
12	1·2
14	1·0
16	0·9

5424.

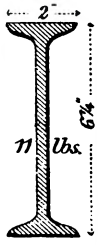

8	3·6
10	3·3
12	2·9
14	2·4
16	2·0
18	1·7

5425.

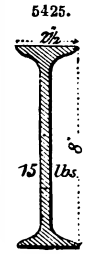

8	6·8
10	5·7
12	4·8
14	4·0
16	3·4
18	3·1
20	2·8
22	2·5

5426.

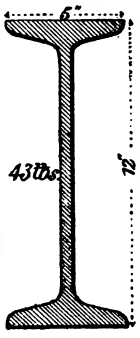

Span.	Distributed Safe Load.
feet.	tons.
10	22·0
12	19·1
14	16·0
16	13·2
18	12·1
20	11·0
22	9·0
24	8·2
26	7·3

5427.

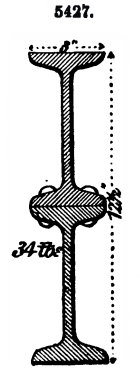

10	18·0
12	15·0
14	13·0
16	11·0
18	9·0
20	8·0
22	7·0
24	6·0
26	5·0

5428.

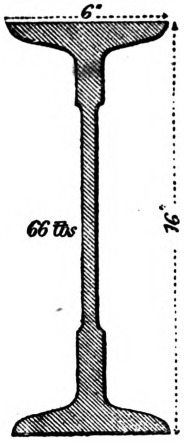

Span.	Distributed Safe Load.
feet.	tons.
10	40·0
12	35·0
14	30·0
16	26·0
18	23·0
20	20·0
22	18·5
24	17·0
26	15 0

5429.

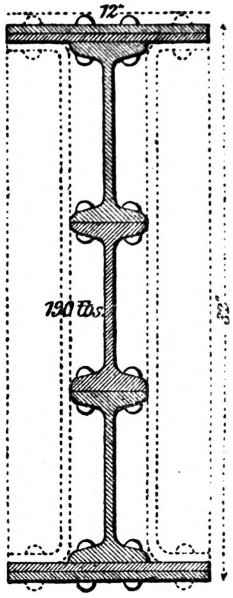

Span.	Distributed Safe Load.
feet.	tons.
20	100 0
22	93 0
24	86 0
26	81 0
28	75 0
30	70 0

5430.

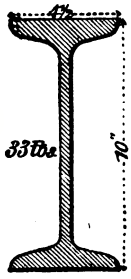

10	13·8
12	11·9
14	10·0
16	8·2
18	7·4
20	6·7
22	5·8
24	5·0

5431.

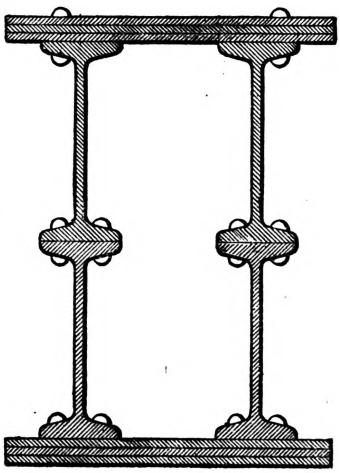

5432.

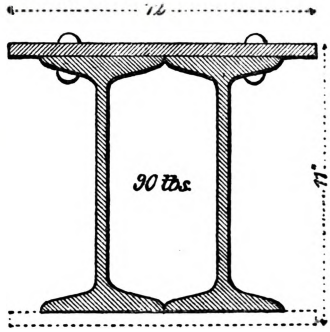

10	56
12	45
14	38
16	30
18	25
20	22
22	20
24	18
26	16

5433.

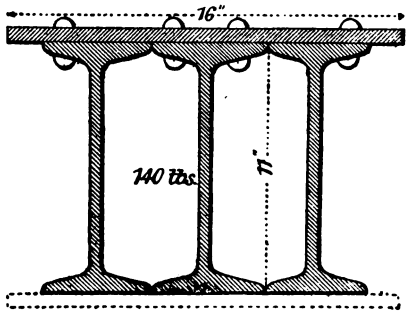

10	84
12	69
14	57
16	47
18	38
20	33
22	30
24	27
26	24

thickness of this rib or web is sufficient to add to the strength of the beam, and this marks the difference between a wrought-iron rolled beam and one of similar form, but which is built up of plates and angle-irons. In the latter, the web is supposed to be only thick enough to keep the upper and lower flanges apart and enable them to do their duty, and not of itself to increase the strength of

the beam. There are two methods of calculating the strength of the rolled beam, so as to include the resistance of the web. By the one, the strength may be first calculated on the assumption that the resistance of the web is nil, and the strength of the web calculated separately as that of a single rectangular beam. The sum of the two calculations will give the total strength of the beam. By the other, the total strength of the beam is calculated by the ordinary formula, and the resistance of the web allowed for, by increasing the value of the constant. The latter method is the simpler, and, moreover, since it is founded on the assumption that the beam is secured only from lateral deflection, instead of supposing the web to act as an independent beam, is a safer one to adopt. The supposition of the web acting in this matter has not been established by any experiment. The breaking load of wrought-iron rolled beams of the section shown in Fig. 5423, may be thus calculated;—Let W = weight in tons uniformly distributed over the beam which is supported at both ends; A = sectional area in inches, D = depth in inches, L = span in inches, and C a constant equal to 80. Then $W = \frac{2 \times A \times D \times C}{L}$. As an example;—What is the breaking weight in tons uniformly distributed over a rolled beam, having each flange equal to $2\frac{1}{2}$ in. in breadth, by $\frac{1}{2}$ in. in thickness, a depth of 6 in. and a span of 20 ft? By the formula $W = \frac{2 \times 1{\cdot}25 \times 6 \times 80}{20 \times 12} = 5$ tons. The value of the constant C must never be taken so high as 80, unless the rib is sufficiently thick to prevent the slightest tendency to lateral deflection. In the case of built-up beams, its value should not be greater than 75. The rolled beams are very useful for joists, especially where the floors are required to be fire-proof. They can be rolled in one piece up to about 30 ft. in length, and 15 in. in depth. The breaking weight in tons, uniformly distributed, for rolled beams of different spans and dimensions is given in Table X. The depth and sectional area are in inches.

Table X.—Strength of Rolled Wrought-iron Beams.

Depth of Beam.	Dimensions of Flange.	Breaking Weights in Tons.				
		Span in feet, 10.	Span in feet, 15.	Span in feet, 20.	Span in feet, 25.	Span in feet, 30.
5	2 × ½	6·60	4·40	3·30	2·64	2·20
6	2½ × ½	10·00	6·60	5·00	4·00	3·30
7	3 × ½	14·00	9·33	7·00	5·60	4·66
8	3 × ⅝	20·00	13·20	10·00	8·00	6·66
9	4 × ¾	36·00	24·00	18·00	14·40	12·00
10	4½ × 1	60·00	40·00	30·00	24·00	20·00
11	4½ × 1	66·00	44·00	33·00	26·40	22·00
12	5 × 1	80·00	52·00	40·00	32·00	26·66
13	6 × 1	104·00	69·33	52·00	41·60	34·66
14	7 × 1	130·66	87·11	65·33	52·26	43·55
15	7 × 1	140·00	93·33	70·00	56·00	46·66

If the value of L be taken in feet, the formula for the breaking weight may be written $W = \frac{13{\cdot}33 \times A \times D}{L}$. We have selected a few of the numerous examples of rolled joists and their combinations from those introduced and manufactured by Measures Bros. and Co. The spans in feet and the safe loads corresponding are annexed. The depth of a rolled girder may be taken somewhat less than in the case of a built-up girder, owing to the much greater lateral stiffness. In the case of girders with narrow flanges they should not be used of a less depth than $\frac{1}{24}$ of the span, but when wide flanges are employed, the ratio, according to the statement of the manufacturer, may be safely reduced to $\frac{1}{30}$. This we do not concur in. From $\frac{1}{16}$ to $\frac{1}{20}$ will be found the most economical proportion, as well as that most in accordance with scientific designing. Where the depth is fixed by the consideration of headway or by other contingencies, and heavy weights have to be supported, two or three girders may be placed side by side, and riveted together with a top and bottom plate covering the whole breadth, as shown in Figs. 5431 to 5433. It must be borne in mind that not quite the whole additional strength is gained by this arrangement, as the plate acts also as a wrapper or cover for the joints existing between the separate beams. The arrangement is, however, occasionally advantageous, as it affords a very stiff girder with a comparatively small depth. For moderate-size sections, the simple rolled girder is to be preferred to the built-up one, but when the depth exceeds a foot, it becomes a question of calculation. Supposing the price a ton of the two beams when complete to be the same, it is clear that, assuming them to be similar in net sectional area and other dimensions, the one which supports the greater load proportionally to its own weight will be the cheaper. There is always a loss in metal in all rolled girders, because the web must be thicker than what is required. As already stated, the increase of thickness does give additional strength to the girder, but not to the same extent as if the superfluous material were removed from the web and transferred to the flanges, where its power of resistance to strain is a maximum. The difference is, that in a built-up girder, we can place the material exactly where we please, whereas we have not so much freedom of design in a rolled beam.

Flitch Beams.—Flitch beams are a combination of timber and iron, and are chiefly employed when but a moderate degree of strength is required, but considerable bearing surface, and a ready means of attaching other timbers and parts of framework. Some examples are shown in Figs. 5434, 5435. Their strength may be thus calculated. Let B and D = breadth and depth of the wood

in inches, T the thickness of the iron plate or flitch, L the span in feet, C a constant, and W the breaking weight in cwts. uniformly distributed over the beam; then $W = \frac{2\,D^2\,(C\,B + 30\,T)}{L}$.

The values for C for different materials are, teak = 4·0, elm = 2·0, fir = 2·5, oak = 3·0. The real strength of a flitch beam in Figs. 5434, 5435, consists in that of the iron; that of the timber counting but little. In addition to being in two pieces, it is also weakened by the bolt-holes passing through it. The strength of the balk in the beam, however, is not seriously impaired, beyond the weakening due to the holes made for the bolts. The French engineers sometimes build up a flitch beam with plates and angle-irons, but in the calculation of the strength, the timber is not taken into account. The simple rolled joist is preferable to the flitch beam, which at the best is but a makeshift, since the timber by itself would not carry the load, and the iron without the support of the timber would give way by lateral flexure. A flitch beam of wood and iron plates makes a very convenient rafter for roofs not exceeding 40 ft. in span, and is, so far as safety is concerned, quite as fire-proof as if it were all of solid iron. It offers superior facilities for attaching the purlins and louver frame, which can be fixed with small wood screws, which do not damage the material. In new countries where timber is cheap, and iron only to be obtained in plain bars and plates, flitch beams can be used with great advantage. They are also much used in warehouses, being frequently built in, or encastré in the walls. Unless protected from the weather, flitch beams are not durable even when the timber is creosoted, although the latter process enables them to last longer than they would do otherwise.

5434.

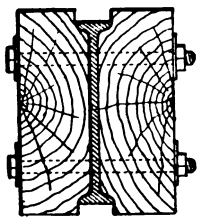

5435.

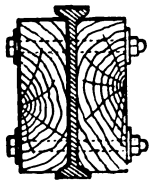

Buckled Plates.—As a material of construction, Mallet's buckled plates have been very extensively employed, their peculiar form imparting to them great strength and rigidity.

The title, buckled plate, has been given by the inventor to any plate of iron or other metal, the surface of which has been curved or arched, with a very small rise or curvature springing from the edges of the plate in all directions towards the centre, with or without a flat margin all round, such that a transverse section of the plate, in any direction, presents a curved line, as in Figs. 5436 to 5439. Each plate is therefore a very thin and flat polygonal dome or groined arch; the thrusts of an imposed load upon which, in the direction of any two opposite sides, are sustained by the tensions of the outer portions of the adjacent sides of the plate. The flat margin all round is called the fillet.

5436.

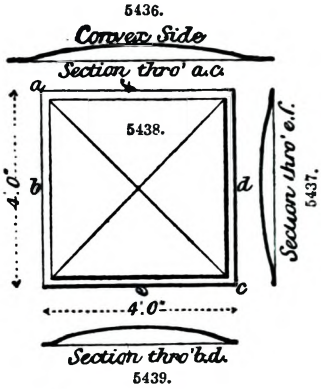

5439.

Such a plate applied as part of a floor, for example, presents a form possessed of great transverse strength and stiffness, when supported and bolted or riveted down round the edges, or supported alone without bolting or riveting down, or supported only at two opposite edges, or even at the corners. Its strength and stiffness are nearly the same, whether the safe load is applied upon the convex or upon the concave side. It also possesses great rigidity and stiffness in every direction in the plane of the plate, so that such plates become an important element of structural strength, when used as bridge flooring. These plates also possess great strength to resist torsion, or the effect of equal and opposite transverse forces applied at adjacent angles of the plate, as shown in Fig. 5438.

The resistance of square buckled plates is directly as the thickness and inversely as the clear bearing. A buckled plate encastré, that is, bolted or riveted down all round, gives double the resistance of the same plate merely supported all round, and if two opposite sides be wholly unsupported, its resistance is reduced in the ratio of 8 to 5. Within the limit of safe load the resistance is nearly the same, whether it be upon the crown or uniformly diffused. The stiffness at any point of the plate, as against unequal loading, is as the square of the thickness nearly, and inversely as the curvature. The curvature, unless for special object, should never exceed that which will just prevent the crippling load bringing the plate down flat, by compression of the material; less than 2 in. versed line of curvature has been found sufficient for ¼-in. buckled plate 4 ft. square.

A 3-ft. square buckled plate, of ordinary Staffordshire iron ¼ in. thick, 2 in. in width of fillet, 1¾ in. curvature, supported only all round, requires upwards of 9 tons diffused over about half the superficies at the crown to cripple it down, and double this, or 18 tons, to cripple it if firmly bolted or riveted down to rigid framing all round. A similar plate of soft puddled steel has been found to bear nearly double the preceding, or 35 tons, to the square yard. The buckled plates of the floor of Westminster new bridge, each averaging 7 ft. by 3 ft., ¼ in. thick, and 3½ in. curvature, were tested by lowering upon the crown of each a block of granite of 17 tons weight, which they sustained without injury. In structures exposed to impulsive loads, such as railway or other bridge flooring, one-sixth of these crippling loads should not be exceeded for the safe load, nor one-fourth for quiescent loading.

The floors of fire-proof buildings formed of thin buckled plates, laid on wrought-iron girders and cross-joists, and covered with a stratum of 4 or 5 in. of concrete, with a tiled, slate, boarded or other floor surface above, constitute a good fire-proof construction. As compared with the common system of brick arching on iron beams, such flooring presents the advantages of reduced thickness and weight, and relief of the walls from all thrust or strain by expansion.

Buckled plates may readily be galvanized, either before or after buckling. Unless out of reach of the moist and saline atmosphere, extending some miles from all sea-coasts, and remote from the still more destructive action of the sulphur acids in the air of our coal-consuming cities, galvanizing is not always a certain protection to iron from corrosion.

Rolled, plate, or sheet iron, is the material of which buckled plates are formed. Buckled plates of thin sheet zinc, in tiles 2 ft. square, form roof coverings of strength, lightness, and elegance. The adaptation of puddled steel as a material for buckled plates has lately opened a new field for their applications. Such plates possess double the stiffness and tenacity, and more than double the resistance to compression of rolled iron of equal dimensions.

The size of buckled plates formed of one single rolled plate, is only limited by the breadth to which sheet or plate iron can be rolled, at market prices; and the sizes that have been found most advantageous for the majority of purposes, are plates of 3 ft. and of 4 ft. square, or of those widths by the full length of the sheet. Compound plates, possessing the properties of buckled plates, may be formed by uniting into one several smaller curved plates; and such large or compound buckle-plates, for roofs and floors of prison cells instead of arching, and for water-tanks.

Square plates of either of the two ordinary market sizes are always to be preferred, on the ground of economy in prime cost, and in application, and in being obtained with facility. Square plates produce a stronger floor, with a given weight of iron, than any other form. The resistance of the latter being that nearly of a square plate, whose side is equal the longer dimension. Buckled plates of 3 ft. or of 4 ft. square can be readily adapted to the framing of any structure. If rectangular plates are used, the longer edge should not be much more in length than twice the shorter.

Buckled plates may be united to each other, or to the frame of the structure they cover, by either lap or butt joints, as shown in Figs 5440, 5441, either by screw-bolts, rivets, or wood screws, and the joints are made absolutely water-tight, when required, by riveting and chinking up; by interposed strips of tape or of felt, saturated in oil cement, or in tar and pitch; by strips of vulcanized india-rubber, or by a thin layer of oil putty. Economy is always consulted by supporting each plate all round, one pair of opposite fillets resting on the girders or joists of the structure, and the joints of the cross fillets supported by an angle-iron above, thus forming a lap-plate.

TABLE OF STRENGTH AND WEIGHT OF BUCKLED PLATES.

No.	Thickness of Plate.	Weight a square yard of Buckled Plate.	Weight of an equal surface, 1 square yard, of Corrugated Plate of corresponding thickness.	Safe passive Load, uniformly diffused a square yard, for 3 feet square Buckled Plates.	Safe impulsive Load, uniformly diffused a square yard, for 3 feet square Buckled Plates.	Nearest number of square yards in 1 ton of Buckled Plates.
	B. W. G. in.	lbs.	lbs.	tons.	tons.	sq. yds.
1	No. 18 = ·048	17·3	20·7	0·27	0 20	129
2	No. 16 = ·066	23·6	28·3	0·43	0·32	95
3	No. 12 = ·107	38·7	46·4	0 64	0·48	57
4	" 1/8	45·0	54·0	1·0	0·75	49
5	" 3/16	67·5	81·0	2·5	1·7	33
6	" 1/4	90·0	108·0	4·5	3·0	24
7	" 5/16	112·5	135·0	6·2	4·7	20
8	" 3/8	135·0	162·0	9·0	6·8	16

The safe loads, in columns 5 and 6, may be taken at double for buckled plates of puddled steel.

In Figs. 5440 to 5444 are shown the different methods of forming joints with the buckled plates. They are all good, with perhaps the exception of Fig. 5444, as the fillet of the plate which overlaps

5440.

Simple Lap.

5441.

Simple Butt.

5442.

Angle Iron Butt Joint.

5443.

T Iron Butt Joint.

5444.

Lap with Edge of Plate turned up to Stiffen.

the other would require especial workmanship and consequently entail extra cost. Besides, the same purpose would be equally well answered by employing an ordinary angle or T iron.

Corrugated Iron.—Little or no information exists with respect to the strength of corrugated iron, but the following experiments, by J. H. E. Hart, of the P. W. D. India, on its transverse strength will be found valuable. The iron was supposed to be of the following gauges;—8 BWG, 10 BWG, 12 BWG, 16 BWG, 22 BWG. The sheets or plates were supported on trestles, and loaded in their middle by weights suspended in a scale pan. The bending action of the load was distributed along the transverse axis by a rigid bar of timber laid across the sheet at right angles to the corrugations, and the pressure of this bar was distributed to ridge and furrow by a layer of damp sand. Fastened to this bar by a cotter was a flat strip of steel, which, passing

through a slot in the sheets, suspended a stirrup with a universal joint carrying a roughly-made scale beam. The dimensions of the slot were $\frac{3}{4}$ in. long by $\frac{1}{4}$ in. wide.

The object of this arrangement was to obviate any unequal strain on one side or other of the sheets, through the oscillations of the load in the scale pan. The trestles were movable along sleepers sunk in the ground, so that the bearings of the sheets could be altered at pleasure. The deflections were measured with a scale of 50ths of an inch, which was hung from the lower side of the sheets, between silk threads stretched by weights between the trestles. The thicknesses of the sheets were measured with a scale of 100th of an inch, read off with a magnifying glass. The sheets broken were of various breadths in order to test the accuracy of the formula; for the same reason the bearings were made to vary; and in order that the comparison might be closer, several of the broken sheets were again subjected to experiment. The constant, or modulus of rupture, arrived at is on the whole sufficiently uniform, and establishes fairly Rankine's approximate formula, for the moment of resistance of corrugated iron, given in his Manual of Civil Engineering;—

$$\frac{4}{15} f_a h b t \ldots$$

which equated with the bending moment for a central load gives

$$\frac{4}{15} f_a h b t = \frac{W l}{4}, \text{ whence } f_a = \frac{15}{16} \frac{W l}{h b t},$$

by which formula the modulus of rupture f_a is calculated.

In the formula;—

W = The total load in pounds;
h = The height of the corrugations measured from ridge to furrow;
b and t = The breadth and thickness respectively of the sheets in inches;
l = The bearing or span between supports in inches.

The heights of the corrugations were found to be very unequal, not only in adjacent ridges and furrows, but also in different parts of the same furrow. The heights given in the data are the average of all across the sheet in the middle, as shown in the sketches of the section in Figs. 5445 to 5457. The outer corrugations, unless the plate was expressly cut, were not of the full depth, and their heights were rejected as an element of strength. The thicknesses varied in different sheets of the same gauge, and also slightly in different parts of the same sheet. They were measured from a piece cut out of the sheet, and carefully filed true; in few cases, however, did they correspond with the tabular value of the thickness of the supposed gauge of the sheets. The placing and removal of the loading was effected through the medium of a lever and screw-jack, which arrangement obviated any chance of a jar of the material from jerks or vibrations of the load. Every care was taken to avoid inaccuracy, either of observation or of result.

No. of Experiment.	Description of Sheet.	Weight in lbs.	Deflection in inches.	Dimensions of Sheet, and Remarks.
1	Gauge No. 22	164	·60	t = ·029 in.
		220	·82	l = 60 in.
	Size of sheet 8′ × 2′ 3″	234	·88	b = 27 in.
	Weight of sheet 28 lbs.	248	·92	h = ·67 ∴ f_a = 46567 lbs.
	„ a sq. ft. = 1·56 lb... ..	262	1·00	on sq. in.
		276	1·08	
		290	1·14	Yielded slowly on adding
		304	1·22	last weight by tearing of
		430	broke	lower corrugations on each side of slot in middle.

5445.

2	Gauge No. 20..	90	·18	t = ·035 in.
		146	·28	l = 60
	Size of sheet 6′ × 2′ 7¾″	202	·40	b = 31·75 ∴ f_a = 45628
	Weight of sheet 29 lbs...	258	·52	h = ·71
	„ a sq. ft. = 1·83 lb.	314	·64	
		370	·78	
		426	·96	
			ultimate	
		640	6·8	
		641	broke	

5446.

No. of Experiment.	Description of Sheet.	Weight in lbs.	Deflection in inches.	Dimensions of Sheet, and Remarks.
2a	Uninjured end of above sheet re-broken	1448	broke	$l = 30$ in. $h = \cdot 72 \therefore f_a = 50900$
3	Gauge No. 17	·46	·08	$t = \cdot 06$ in.
		102	·12	$l = 60$
	Size of sheet 6′ × 2′ 3½″	158	·20	$b = 27 \cdot 5 \therefore f_a = 41663$
	Weight of sheet 38 lbs.	214	·31	$h = \cdot 95$
	„ a sq. ft. = 2·76 lbs. ..	382	·40	
		1161	broke	Two separate sheets with weight hung between the right-hand sheet failed first.
	5447. 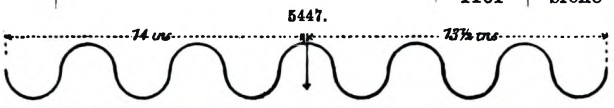			
3a	Uninjured end of above sheet re-broken	1018	broke	$1 = 30\ h = \cdot 86\ b = 3 \cdot 5$ $\therefore f_a = 41101$
4	Gauge No. 17	160	·12	$t = \cdot 06$ in.
		272	·22	$l = 60$
	Size of sheet 6′ × 2′ 3¾″	384	·34	$b = 27 \cdot 75 \therefore f_a = 43528$
	Weight of sheet 38½ lbs.	496	·46	$h = \cdot 95$
	„ a sq. ft. = 2·77 lbs.	720	·72	Yielded slowly with puckering of the top corrugation and spreading at sides.
		1224	broke	
	5448. 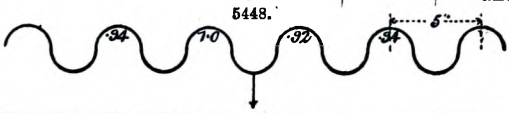			
5	Gauge No. 13 or 12	260	·28	$t = \cdot 096$ in.
		596	·46	$l = 60$
	Size of sheet 6′ × 2′ 9″	1044	·68	$b = 33$
	Weight of sheet	1794	a	$h = \cdot 9$
	„ a sq. ft.	1895	c	a here received a shock from slipping of lifting tackle.
		2114	d	c Ditto ditto.
		2160	broke	d plate began to sink visibly, giving most at side where h was least.
	5449. 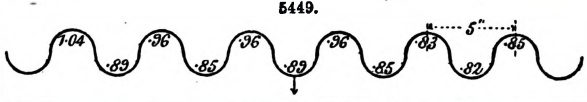			
6	Gauge No. 12	151	·12	$t = \cdot 1$ in.
		263	·20	$l = 48$
	Size of sheet 6′ 0¼″ × 0′ 10·1″ ..	375	·30	$b = 10 \cdot 1 \therefore f_a = 49770$
	Weight of sheet 24·5 lbs.	487	·38	$h = \cdot 94$
	„ a sq. ft. 4·84	599	·46	5450. 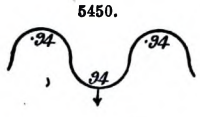
		1050		
6a 6b	Uninjured ends of above sheet re-broken	1768 2210		$l = 30 \therefore f_a = 52376 \cdot 4$ $l = 24 \therefore f_a = 52374 \cdot 6$
7	Gauge No. 12	152	·10	$t = \cdot 1$ in.
		264	·18	$l = 48$
	Size of sheet 6′ 0¼″ × 0′ 9·9″ ..	376	·26	$b = 9 \cdot 9 \therefore f_a = 46124 \cdot 4$
	Weight of sheet 23·5 lbs.	488	·30	$h = \cdot 95$
	„ a sq. ft. 4·73 lbs.	600	·44	5451. 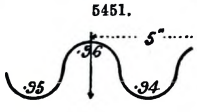
		768	·60	
		964	broke	

No. of Experiment.	Description of Sheet.	Weight in lbs.	Deflection in inches.	Dimensions of Sheet, and Remarks
8	Gauge No. 13 or 12	90	·44	t = 095 in.
		146	·72	l = 60
	Size of sheet 6′ × 1	202	1·0	b = 12 . f_a = 43099
	Weight of sheet 27 lbs.	258	1 36	h = 49
	„ a sq. ft. 4 50 lbs.	314	1·8	
		428	broke	
				5452. 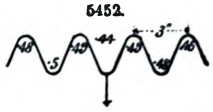
9	Gauge No. 13 or 12	90	·34	t = 095 in.
		146	·58	l = 60
	Size of sheet 6′ × 1′	202	80	b = 12 ∴ f_a = 41959 4
	Weight of sheet 28 lbs.	258	1·04	h = 56
	„ a sq. ft. 4 66 lbs.	314	1·26	These two sheets 8 and 9 are rolled to sharper curves at the corrugations than others, and approach the zigzag form. They are also got from the same whole sheet cut in half, and show a curious discrepancy in the height of corrugations.
		426	2·10	
			ultimate	
		480	2·78	
		483	broke	
	5453.			
10	Gauge No. 12 or 11	212	·12	t = ·12 in.
		436	20	l = 60
	Size of sheet 6′ × 2′ 9″	660	26	b = 33 ∴ f_a = 58940
	Weight of sheet 103 lbs.	884	32	h = ·964
	„ a sq. ft. 6·24 lbs.	1108	·36	
		1332	·44	
		1780	·56	
		4000	broke	
	5454.			
11	Gauge No. 12 or 11	90	·06	t = ·115 in.
		202	·10	l = 60
	Size of sheet 6′ × 2′ 9″	426	·20	b = 33 ∴ f_a = 46373
	Weight of sheet 88 lbs.	650	·30	h = ·964
	„ a sq. ft. 5·34 lbs.	762	·34	
		900	·40	
		1251	·58*a*	*a*, Load removed, plate returned to the horizontal.
		2750	·18	
		3072	broke *b*	*b*, Ultimate deflection observed at 3000 was 4·6″
	5455. 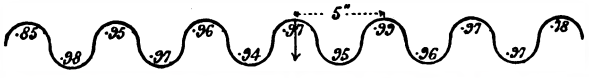			
12	Gauge No. 9	202	·18	t = ·15 in.
		426	·36	l = 60
	Size of sheet 6′ × 1′ 3″	650	·50	b = 15 ∴ f_a = 47760
	Weight of sheet 49 lbs.	874	·60	h = ·97
	„ a sq. ft. 6·53 lbs.	1110	·84	
	5456.	1334	1·02	
		1558	1·40	
		1850	broke	

No. of Experiment.	Description of Sheet.	Weight in lbs.	Deflection in inches.	Dimensions of Sheet, and Remarks.
13	Gauge No. 2	202	·20	t = ·15 in.
		426*a*	·36	l = 60
	Size of sheet 6′ × 1′ 3″	650	·52	b = 15 ∴ f_a = 43281
	Weight of sheet 47¾ lbs.	874	·64	h = ·96
	„ a sq. ft. 6·36 lbs... ..	1098	·80	
		1322*b*	1·02	*a*, Outer edge began to cripple.
	5457.		ult. def.	
		1660	2·84	*b*, Load removed and sheet returned to deflection of ·04 only.
		1662	broke	

Mean value of f_a = 46682 from all experiments, or = 45916 omitting No. 10.

It appears from these experiments that the highest and lowest values of f_a are respectively 58940 and 41101; the former of these extreme values is open to suspicion, because of the great discrepancy between the breaking load of it and its sister sheet, No. 11. The mean value of f_a from the remaining experiments would be, as nearly as might be, 46000, and this may be adopted as its true value. Experiments 2, 2*a*, and 6, 6*a*, show that the strength varies inversely as the length, although a slight increase of strength appears in the shorter sheets, which may be accounted for by the deflection being less. The breadth does not appear to influence the constant, so that we may assume the strength to vary as this dimension. The depth also of corrugation does not appear to influence the result other than directly; this is, however, a point that could only be examined by having similar sheets rolled of varying depths of corrugations. However, Experiments 5, 8, and 9, afford a comparison as far as they go. Experiments 6, 7, 12, and 13, show that in narrow sheets the position of the side edge, whether in tension or compression, makes a difference. This is a necessary consequence of the laws of the strength of materials, and it was observable that when the side edges of the plates were up, as in Experiment 7, the edges crippled early in the experiment; while when they were down, as in Experiment 6, they did not fail till later. All plates first showed symptoms of failure at the side edges. None of the plates gave way suddenly, but each sank slowly when the breaking weight had been reached. As a rule, they appeared to fail by the spreading of the corrugations at the middle, and did not crush at the tops of the ridges; on the contrary, when the sheet was allowed to sink till rupture of the material took place, fracture occurred by tearing of the furrow commencing from each side of the central slot, and proceeding towards the sides of the sheet at right angles to the length.

It is probable that had the sheet been prevented from spreading by strips riveted across it, as recommended by Rankine, the constant would have increased in value. In bridges, the adjoining sheets would act so as to oppose the spreading, and this may be looked upon as an element of strength. The results of the observations of the deflections seem to be uniform, but at present no deductions from them are made. The ultimate deflections were in a few instances observed as a matter of curiosity, but in most cases it was not possible to hit off the very extreme deflections.

Concluding Remarks.—It has often been asserted that our knowledge, with respect to a subject so important as that we have just considered, is very imperfect. To a certain extent the assertion is true. It cannot be denied that although we possess an amount of knowledge relative to the subject, which is sufficient to enable us to design any structure with safety, yet it is very doubtful if the greatest amount of economy is also ensured. When authorities differ with regard to the strength of any material or combination of materials, the obviously only safe plan for the engineer or architect to adopt is to allow a large margin, which, in numerous instances, is excessive. Hence arises a considerable waste of material, and, moreover, a want of confidence in the design, which is extremely unsatisfactory to the designer. It is now close upon thirty years since any series of experiments, bearing the stamp of Government authority, has been carried out. Since that period, the art of construction has undergone many modifications and been subjected to several innovations. A series of international experiments upon the strength of materials, to be carried out by a committee of eminent scientific and professional men appointed by the principal Governments, would be of the greatest value to the cause of science and technical education. It is not enough to design a structure so that it shall be sufficiently strong for its purpose, but to design it so that it shall be no stronger than necessary, and thus solve the great problem, which is to ensure the greatest amount of strength with the least amount of material.

Books on the Strength of Materials;—Turnbull (W.), 'On the Strength of Cast-Iron Beams,' 8vo, 1832. Turnbull (W.), 'On the Strength and Stiffness of Timber,' 8vo, 1833. 'Report of the Commissioners appointed to Inquire into the Application of Iron to Railway Structures,' 2 vols. folio, 1849. Tate (J.), 'On the Strength of Materials,' 8vo, 1850. Clark (E.), 'Britannia and Conway Bridges,' 8vo, 1850. Tredgold and Hodgkinson 'On the Strength of Cast Iron and other Metals,' 8vo, 1861. Belanger (J. B.), 'Théorie de la Résistance des Solides,' 8vo, Paris, 1862. Morin (A.), 'Résistance des Matériaux,' 2 vols. 8vo, Paris, 1862. Kirkaldy (D.), 'Experiments on Wrought Iron and Steel, 8vo, 1864. 'Leçons sur la Résistance des Matériaux,' par Navier, avec Notes et Appendices par M. Barre de St. Venant, Paris, 1864. Barlow (P.), 'On the Strength of Materials,'

8vo, 1867. Baker (B.), 'On the Strengths of Beams, Columns, and Arches,' crown 8vo, 1870. Fairbairn (W.), 'The Application of Cast and Wrought Iron to Building Purposes,' 8vo, 1870. 'Tredgold's Carpentry,' by J. T. Hurst, crown 8vo, 1871. Wood (De Volson), 'Treatise on the Resistance of Materials,' 8vo, New York, 1871. Anderson (J.), 'The Strength of Materials and Structures,' 12mo, 1872. Donaldson (W.), 'New Formulas for the Loads and Deflections of Solid Beams and Girders,' 8vo, 1872. Pole (W.), 'Iron as a Material of Construction,' crown 8vo, 1872. Rankine (W. J. M.), 'Applied Mechanics,' 1872. Stoney (B. B.), 'Theory of Strains,' 8vo, 1873. Cargill (T.), 'Strains upon Bridge Girders and Roof Trusses,' 8vo, 1873.

MEASURING AND FOLDING.

W. H. and T. Hacking's Folding and Measuring Machine, Figs. 5458 to 5464.—The novelty in this machine consists in an arrangement of worm shafts and wheels by means of which the rails used for holding the folded cloth are moved simultaneously and by one operation to suit the various lengths of folds required to be made, this arrangement being applicable, with slight modifications to either flat or circular tables; and in an arrangement of bevel-wheels and shafts by which the crank studs which determine the length of the stroke of the folding arms, and consequently the length of the fold, are moved simultaneously and by one operation.

Hackings also use double folders or plaiting knives placed one above the other about half an inch apart, and fingers actuated by cams and springs which lay hold of and retain the cloth at the end of each fold, the fingers being made to lay hold of the cloth between the double folders and in the interstices between them; combined with an arrangement of parallel bars, cranks and side arms, by means of which the folders or plaiting arms are made to fold cloth on flat tables. Also fingers working in recesses in the folding knives for holding the cloth securely when folded: these fingers being raised by cams and pulled down by springs.

Fig. 5458 represents an end elevation of a circular top folding and measuring machine having Hackings' improvements attached. Figs. 5459 to 5461 are detached elevations of some of the parts, Figs. 5462, 5463, the end and front elevations; and Fig. 5464, a plan of a flat top folding and measuring machine.

5458.

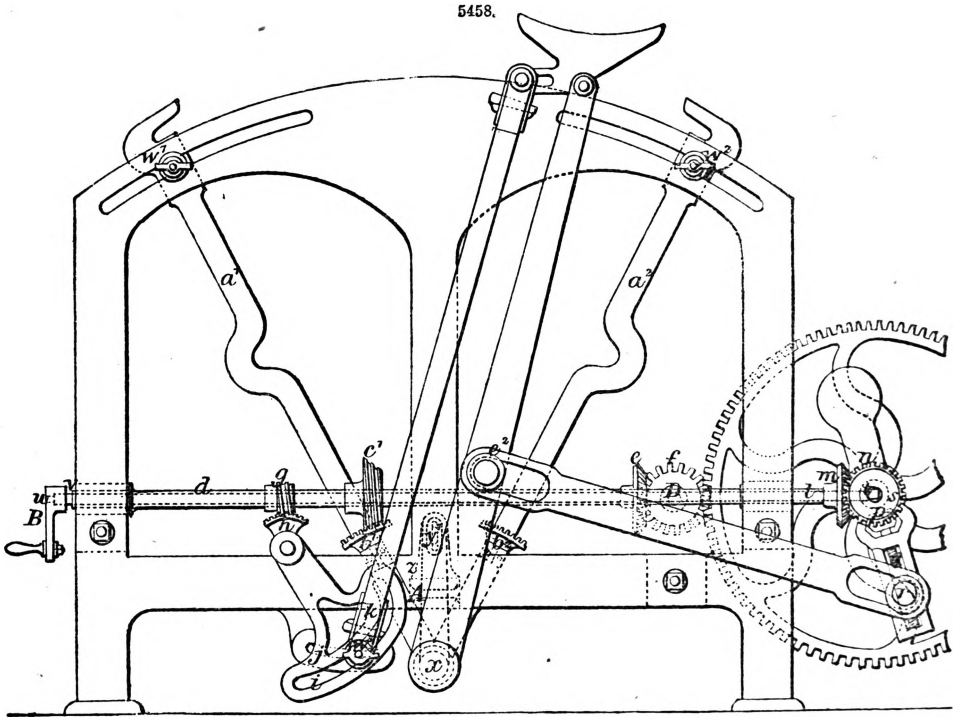

In Fig. 5458 the ordinary card rail brackets are shown prolonged by arms at a^1, a^2, terminating in bosses bored to fit loose on the ordinary rocking shaft x. On the arms a^1, a^2, are fixed quadrants b^1, b^2, being segments of worm-wheels, having the centre of the shafts x for a common centre. Gearing into the quadrants b^1, b^2, are two conical worms c^1, c^2, one being a right-hand worm, and the other left hand. These worms c^1 and c^2 are fixed on the hollow shaft d. When the shaft d is turned round by means of the handle B, which fits on the square v of the shaft d, the arms a^1, a^2, are caused to approach or recede from one another according to the direction in which the handle is turned. On the shaft d is also fixed a worm g, which gears into a quadrant h working on a stud. This quadrant has an arm attached to it, and a curved slot i which clips the stud of the ordinary swivel arm k, and by the rotation of the shaft d causes the stud of the swivel arm to move in the slot j. The quadrants b^1, b^2, and the quadrant h are proportioned to work in unison with each other, so that the rotation of the shaft d causes the swivel arm k to take the right position for the length of fold to which the arms a^1, a^2, are moved.

On the shaft *d* is also placed a mitre-wheel *e* gearing into a mitre-wheel of similar size *f* placed on the shaft D, which extends across the machine. On the opposite end of the shaft D is placed a mitre-wheel corresponding to *f*, which gears into another mitre-wheel corresponding to *e* placed on a shaft corresponding to the shaft *d*, upon which are placed worms corresponding to c^1, c^2, and *g*, gearing into quadrants corresponding to b^1, b^2, and *h*, attached to the card rail brackets and swivel arms on the opposite side of the machine. By the train of wheels thus described the card rail brackets a^1, a^2, and the corresponding card rail brackets on the other end of the machine, the swivel arm *k*, and the corresponding swivel arm at the other end of the machine, are all moved simultaneously by the rotation of the shaft *d*.

5459.

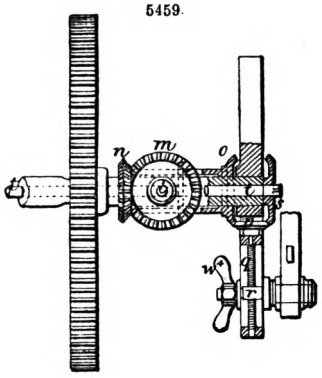

5460.

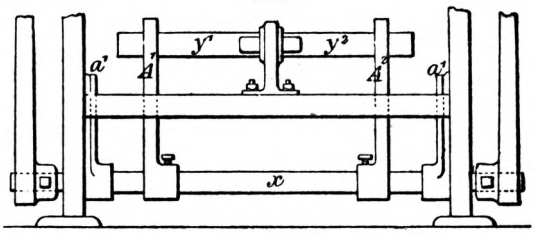

5461.

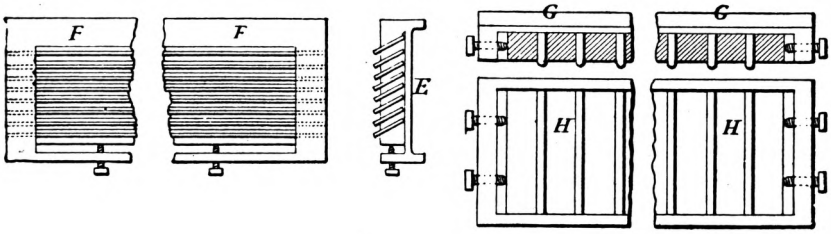

5462.

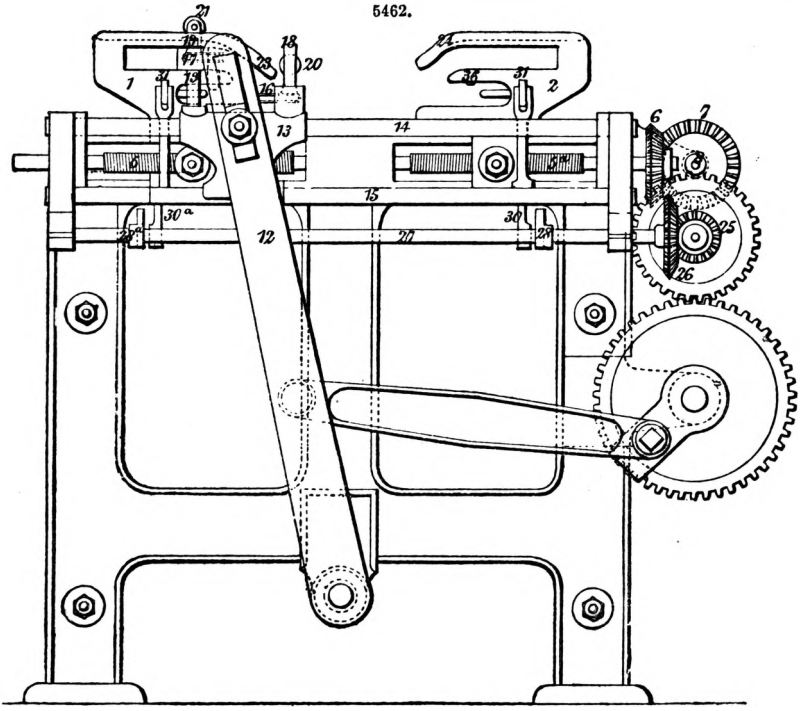

In the interior of the hollow shaft *d* is placed a small shaft *l*, *l*, Figs. 5458, 5459, one end of which projects at *u*, Fig. 5458, and is made square so as to fit in the smaller recess of the handle B At

the other end of the shaft *l* is placed the bevel-wheel *m* gearing into another bevel-wheel *n* Fig. 5459, which has a long boss and another bevel-wheel *o* attached to it. The bevel-wheels

5463.

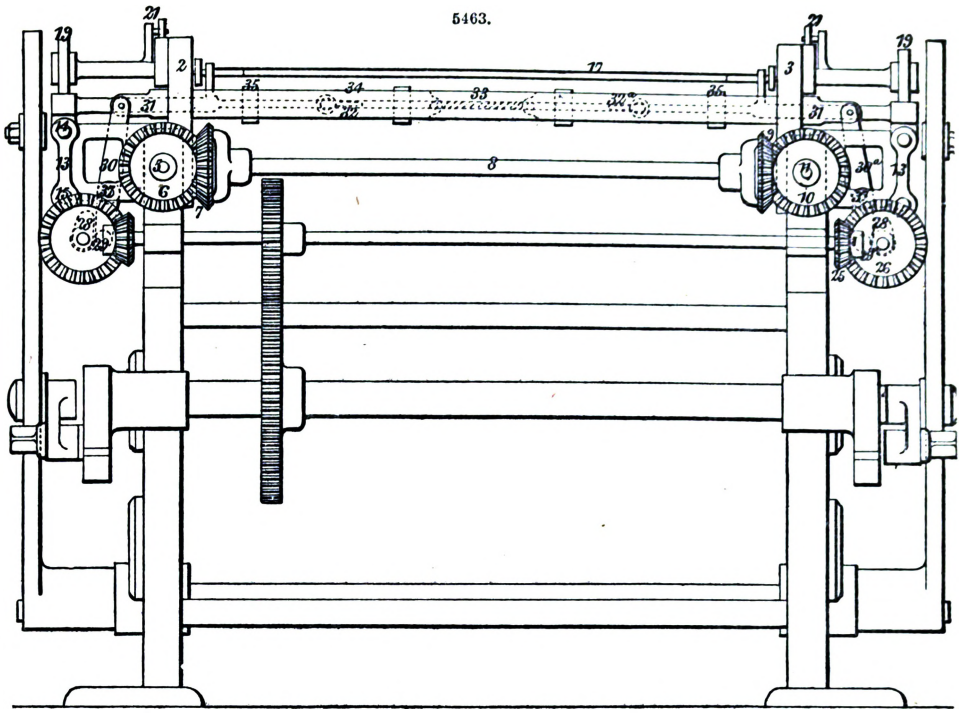

5464.

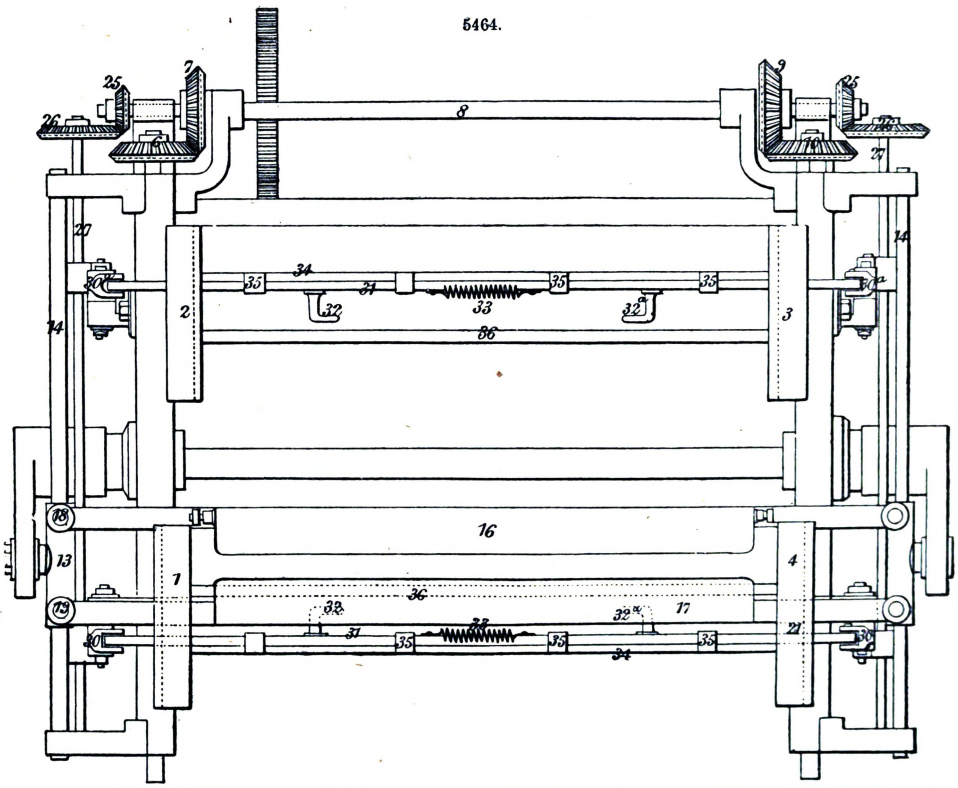

n and *o* are loose on the ordinary crank-shaft of the machine. The bevel-wheel *o* gears into a small bevel-wheel *p* placed at the end of the crank-screw *q*. and to which is attached in the ordinary way

the crank-stud r. By this apparatus the crank-stud r is shifted to give the required movement to the knives of the machine by the rotation of the shaft l turned by means of the handle B, and acting on the train of wheels m, n, o, and p. The bevel-wheel p, Fig. 5459, gears into another bevel-wheel s, which is fastened to a shaft t passing through the centre of the crank-shaft, and having at its opposite end another bevel-wheel corresponding to the wheel s, gearing into another bevel-wheel corresponding to the wheel p, placed at the end of the crank-screw at the opposite end of the machine, by which means both the crank-studs are moved simultaneously.

The handle B, Fig. 5458, has in it two recesses, one fitting on the square u, and the other on the square v, so that both shafts d and l can be turned simultaneously by the same handle B; and the sizes of the bevel-wheels m, n, o, p, are proportioned to the segments b^1, b^2, and h, so that the rotation of the shafts d and l together move in unison the four card rail arms, the two swivel arms, and the two crank-studs, so that each part retains its proper working adjustment in respect of the others. Instead of the ordinary nuts, Hackings employ winged or thumb nuts, as at w^1, w^2, w^3, w^4, for the purpose of attaching the card rail brackets, swivel arms, and the crank-studs in their places. By this means they are enabled to alter the machine for a different length of fold without the aid of a screw-key.

In Figs. 5458, 5460, y^1, y^2, represent a tempered spring carried by the bracket z fixed on the bottom cross rail of the machine. A^1, A^2, are two arms fixed by means of screws to the rocking shaft x, having slots in them through which the ends of the springs y^1, y^2, are passed. When the machine is set in motion the arms A^1, A^2, are oscillated by means of the shaft x, and have to overcome the resistance of the spring y^1, y^2. The strength of the spring y^1, y^2, is proportioned to the weight of the side and swivel arms, and through the medium of A^1, A^2, and x acts as a counterpoise to them, enabling the driving pulley of the machine to be turned with about the same amount of power in all positions of the side arms.

In Fig. 5461 a section of an improved card rail is shown at E, and a plan of the same at F. The space usually filled with card is here filled with alternate strips of india-rubber and wood, placed at an angle to the rail. These strips of india-rubber and wood are shown as going in a parallel direction with the card rail at E and F. A modification of the same arrangement is shown at G, H, in which the alternate strips of india-rubber and wood, instead of being placed parallel with the card rail, are placed transversely. Hackings also use, in lieu of the ordinary card, india-rubber backed with strong cloth, and covered on the face with coarse or fine emery or glass to prevent injury to bleached and finished fabrics. In Figs. 5462 to 5464 the card rail bracket is shown at 1, 2, 3, 4 and is attached to the screw 5, 5^a, by means of a boss tapped to the same pitch as the screw. The screw 5, 5^a, is made with a left-hand thread one portion of its length, and with a right hand for the other. On the extremity of 5 is placed a mitre-wheel 6, gearing into another mitre-wheel 7 placed on the shaft 8, extending across the machine, and having at its opposite extremity another mitre-wheel 9 gearing into another mitre-wheel 10, which actuates a screw 11 corresponding to 5, 5^a. By this means the rotation of the screw 5, 5^a, causes all the card rail brackets, 1, 2, 3, and 4 to approach or recede from one another according to the direction in which it is turned.

The ordinary side arm 12 made to oscillate in the usual manner by means of a crank communicates motion to the knife-bracket 13, which moves in a horizontal manner on the rods 14, 15. The bracket 13 has on it two pillars or studs 18, 19, on which the knives 16, 17, are so placed that they can be made to move up and down on the studs 18, 19, by means of bowls and inclines shown at 20, 21, 23, 24, in a similar manner to the arrangement made by S. Knowles and R. Hayward.

On the first motion shaft is placed a bevel-wheel 25, gearing into another bevel-wheel 26, placed on a shaft 27, running along the end of the machine, and driven at the same speed as the crank-shaft. On the shaft 27 are placed two cams 28, 28^a, of the shape shown in Fig. 5463. These cams act on the bowls 29, 29^a, placed at one extremity of the levers 30, 30^a, carried on the shaft 37. The other extremity of the levers 30, 30^a, is attached to sliding bars 31 passing through the card rail brackets 1, 2, 3, 4, and supported by brackets 35 fixed on the rails 34.

The sliding bars have on them adjustable hooks or bent fingers 32, 32^a, shown at Fig. 5464; the bars are also in two parts in the width of the machine, as in Figs. 5463, 5464, and are connected in the centre of the spiral springs 33.

The mode of working this combination is as follows;—When a piece of cloth is to be folded and measured the fingers 32, 32^a, are set so that they will hook or lay hold of the selvages of the cloth. As the knife 16, bringing with it the cloth in the usual manner, approaches the card rail bracket 1, the fingers 32, 32^a, are drawn out beyond the width of the cloth by means of the levers 30^a and the cams 28^a. When the knife 16 has arrived at the end of its stroke in the direction of the card rail bracket 1, the cam is shaped so as suddenly to release the lever 30^a, and the spring 33 draws the fingers 32, 32^a, so as to lay hold of and retain the selvages of the cloth carried by the knife 16. The knives 16, 17, are bent in a U form, Fig. 5462, so as to allow the finger to lay hold of the cloth in the hollow formed by the bend of the knives. As the knife 17, carrying with it the cloth to be folded, approaches the card rail bracket 2, a similar movement of the fingers is effected by means of the cams 28 and levers 30.

The rails 36 are for the purpose of retaining the folded cloth in its position when the fingers 32, 32^a, are drawn out

Wm Boase's measuring and folding machine, Figs. 5465 to 5468, is so arranged as to enable the complete and self-contained machine to be placed upon a shop counter for ordinary retail use.

A, A, is the upper portion of the counter or platform upon which the machine is fitted; B, B, is the framing, made by preference of cast iron, and containing the whole of the mechanism. This framing is formed by two side frames B, B, consisting of an iron web and suitable strengthening ribs, and fitted upon the counter; and the side frames B, B, may be tied and held together by means of a number of stays or cross bars c, c. They also form the seats for the bearings of all the axles or spindles required for the machine. The framings of the machine are usually 4 ft. 6 in. long, and placed 3 ft. 2 in. apart. C is the receptacle into which the goods or fabrics about to be

measured are placed, either loose or rolled on a roller, or blocked on a board, as the case may be; the outer part of the casing C forming a reversible shutter c^1. D, D^1, are the two rollers between

5465.

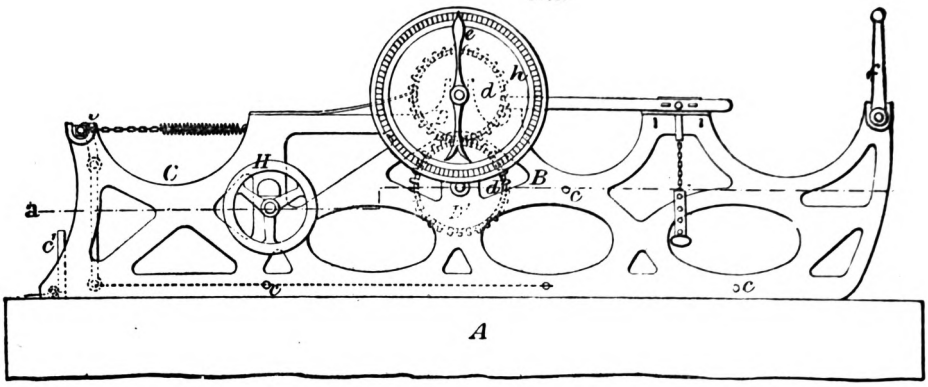

5466.

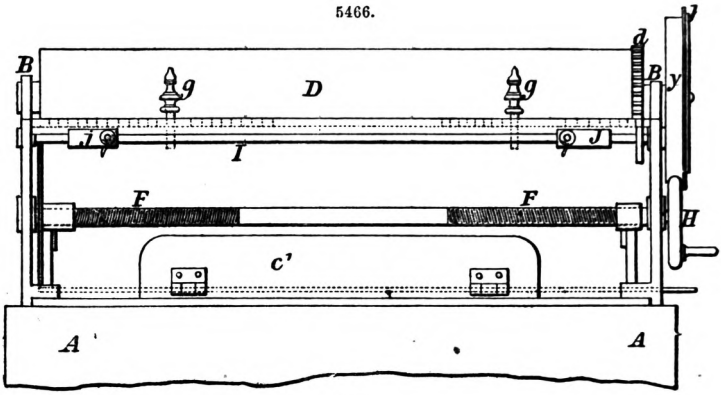

5467.

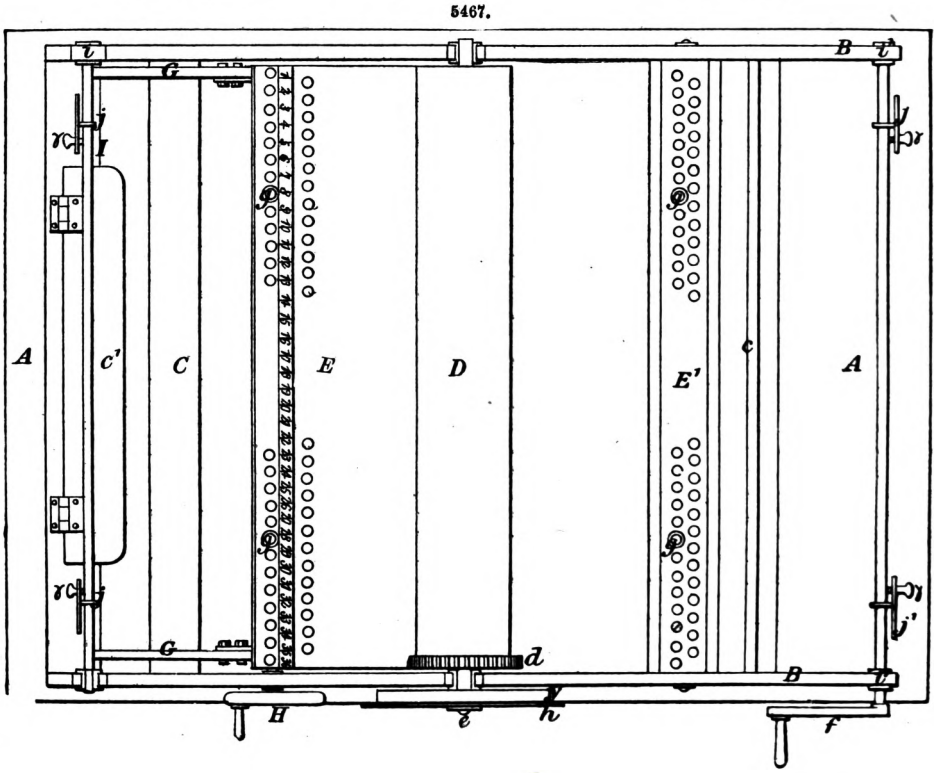

which the fabric passes while the process of measuring is taking place. The upper roller D is removable and its axis adjustable by means of springs, so that this roller is continually kept in close contact with the lower roller D^1. Upon the axis of each of the two rollers a toothed wheel is fixed, both wheels d, d^1, forming together a gearing calculated to assist in the transmission of the motion from one roller to the other.

5468.

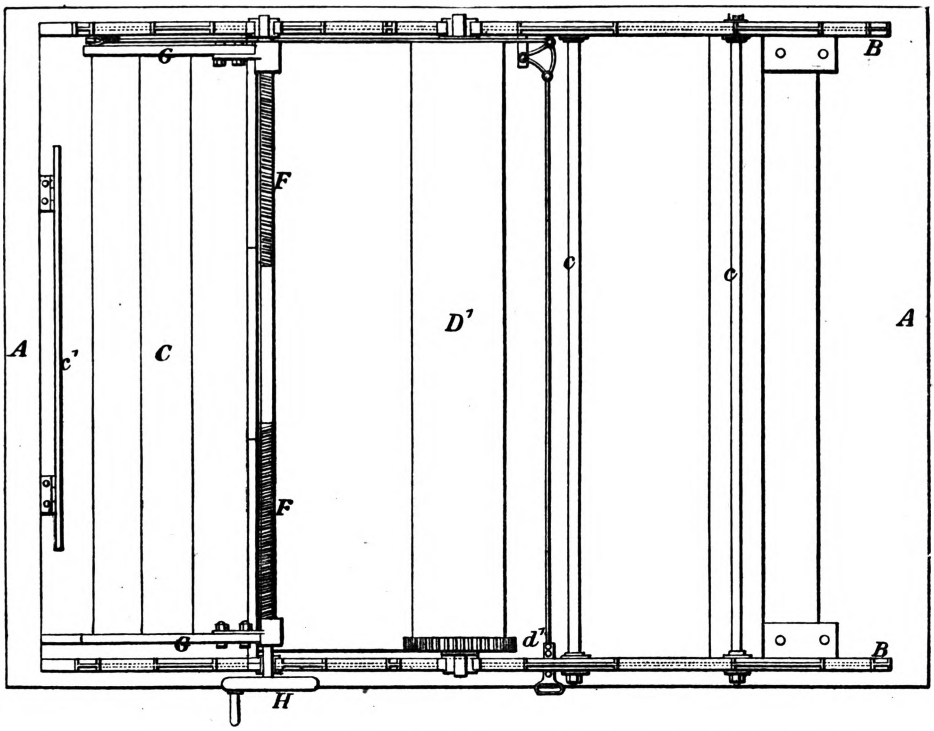

The extremity of the axis of the top roller D has fitted upon it an indicator hand or pointer e, denoting, on a dial h connected with the gearing, the number of yards, mètres, ells, or other units of measure over which the stuff or fabric has travelled during the operation. The fabric having passed between the rollers D, D^1, will be wound up on a roller or blocked on a board connected with the axis l^1 set in motion by hand by means of a crank f, the arrangement of which, as shown in Fig. 5465, enables the operator to measure off as much as 40 yds. a minute. The pointer e, set in motion by means of a pinion and toothed wheel, is arranged in such a manner that it may indicate one unit of measure after every two revolutions of the rollers D, D^1.

The finger bar E^1 is a wooden board of suitable dimensions fitted between the two side frames B, B, while the finger bar E forms portion of a boxing or casing, also made of wood, and so connected with the box or receptacle C that the stuff or fabric may be guided over it on its way to the rollers D, D^1. Inside this casing a right and left handed screw F is fitted between the side frames B, B, in appropriate bearings; the bosses of the two guide-pieces G, G, form the nuts of this screw, and in turning the latter by means of a small hand-wheel H the guide-pieces or arms G, G, will be either brought closer together or set farther apart, so as to become suited to the width of the stuff or fabric to be measured.

A graduated scale or gauge denoting the width of the fabric in inches, nails, centimètres, or other subdivisions of the unit of measure, is affixed to the top of the finger bar E, and the holes for the guide pins or pegs g, g, are at such distances from each other as will correspond to these subdivisions. The same graduated scale or gauge is reproduced on the cross bar I laid down in bearings i, i, connected with the framings B, B, and furnished with adjustable guide-pieces j, j, sliding thereupon, and fixed upon it by means of thumb-screws ♉, ♉, at distances equal to those at which the pins or pegs g, g, are set apart, so as to correspond to the width of the stuff or fabric and guide it in its course. The latter on leaving the rollers D, D^1, is guided over the finger bar E^1, fitted like E, and may continue its course over the cross bar I^1, arranged in a manner identical to I, that is to say, furnished with sliding pieces j^1, j^1, and thumb-screws ♉^{1}, ♉^{1}, and connected in any suitable manner with the roller on which the stuff or fabric is wound up or the board on which it is blocked.

Fig. 5469 is a side elevation, Fig. 5470 a plan, and Fig. 5471 an elevation of a machine for cutting and measuring cloth, for bags and for other purposes, invented by Chas. Blyth. The pieces of cloth intended to be operated upon are laid upon the floor or partly on a kind of shelf or stool with two or more surfaces, so as to economize space. The ends of the pieces are then carried over rods a, a^1, a^2, in this case, say of ¾ in. diameter, to give the necessary amount of tension, and from thence round rollers b, b^1, b^2, to keep the edges in position. The pieces are then taken through or between round bars c, fitted in an upright bracket, and from thence through or between another set of

bars *d*, in one, two or several plys together, as may be most convenient. The whole number of plys are then assembled together or combined and led on to the table and drawn along until

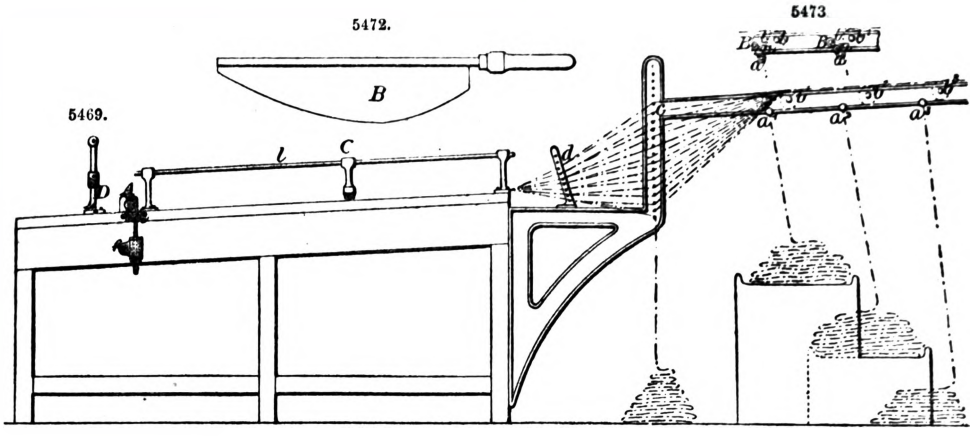

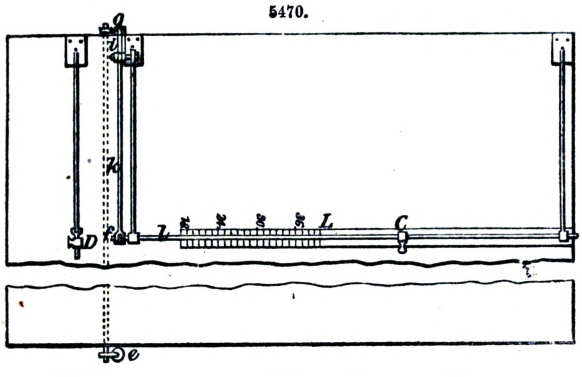

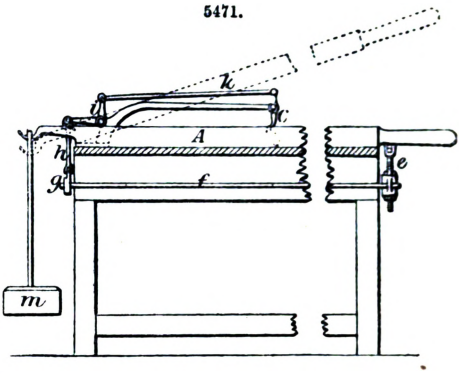

rather past the holding-down lever A, which is afterwards shut down on the cloth and held firmly in that position by means of the catch *e*. This holding-down lever A has a slot running along it of sufficient length to take the whole width of the cloth, and into this slot the knife B, Fig. 5472, is inserted, and is pushed under the lever towards the hinged end to give a fulcrum It is then brought down until the whole width of the cloth is cut throughout the entire thickness of the numerous plys. The catch *e* is then opened, and as it is firmly fixed on the spindle *f* that spindle has a partial rotary motion imparted to it; to the end of the spindle *f* an arm *g* is fixed, which communicates motion to the rod *h*, the other end of which is attached to the bell-crank *i*; this in its turn transmits motion through the rod *k* to the pencil C; the point of the pencil rests upon the cloth, and being thus made to move in a line across the table marks the cloth at that spot, that mark is then drawn under the index finger or pointer D, the lever shut down, the catch put into position to hold down the lever, which operation as just explained causes the pencil to mark the cloth, the knife is inserted, and the cloth is cut to the length or gauge required for the purpose for which it is intended. By repeating this operation any number of lengths may be out in succession. The mark on the cloth by means of the pencil may be adjusted to any required length by the following means;—A rod *l* is made of any required length, upon which the pencil holder may be traversed, means being provided to firmly fix it at any part of the length of the rod; this rod is carried by brackets at each end. A graduated scale L is let in the top of the table, by which any required length may be marked by adjusting the pencil over the required figure of that scale. The lever A is counterbalanced by the weight *m*; the finger or pointer D is hinged so as to yield to the cloth when held and drawn forward by the hands, but falls back to its proper position before the pencil mark is brought up to it.

MECHANICAL MOVEMENTS.

Those means by which motion is transmitted for mechanical purposes are known as mechanical movements.

Motion, in mechanics, may be simple or compound. Simple motions are,—those of straight translation, which, if of indefinite duration, must be reciprocating; simple rotation, which may be either continuous or reciprocating, and when reciprocating is called oscillating; helical, which, if of indefinite duration, must be reciprocating. Compound motions consist of combinations of any of the simple motions.

Perpetual motion is an incessant motion conceived to be attainable by a machine supplying its own motive forces independently of any action from without, or which has within itself the means, when once set in motion, of continuing its motion perpetually, or until worn out, without any new application of external force; also the machine itself by means of which it is attempted, or supposed possible, to produce such motion; an invention much sought after, but physically impossible.

Fig. 5474 is a simple pulley used for lifting weights. In this the power must be equal to the weight to obtain equilibrium.

Fig. 5475. In this the lower pulley is movable. One end of the rope being fixed, the other must move twice as fast as the weight, and a corresponding gain of power is consequently effected.

Fig. 5476. Blocks and tackle. The power obtained by this contrivance is calculated as follows;—Divide the weight by double the number of pulleys in the lower block; the quotient is the power required to balance the weight.

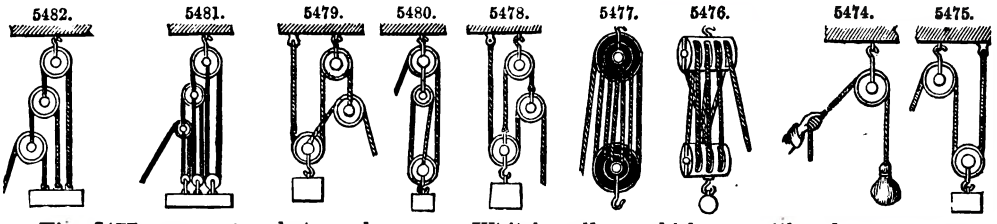

Fig. 5477 represents what are known as White's pulleys, which can either be made with separate loose pulleys, or a series of grooves can be cut in a solid block, the diameters being made in proportion to the speed of the rope; that is, 1, 3, and 5 for one block, and 2, 4, and 6 for the other. Power as 1 to 7.

Figs. 5478, 5479, are what are known as Spanish bartons.

Fig. 5480 is a combination of two fixed pulleys and one movable pulley.

Figs. 5481 to 5484 are different arrangements of pulleys. The following rule applies to these pulleys;—In a system of pulleys where each pulley is embraced by a cord attached at one end to a fixed point, and at the other to the centre of the movable pulley, the effect of the whole will be the number 2, multiplied by itself as many times as there are movable pulleys in the system.

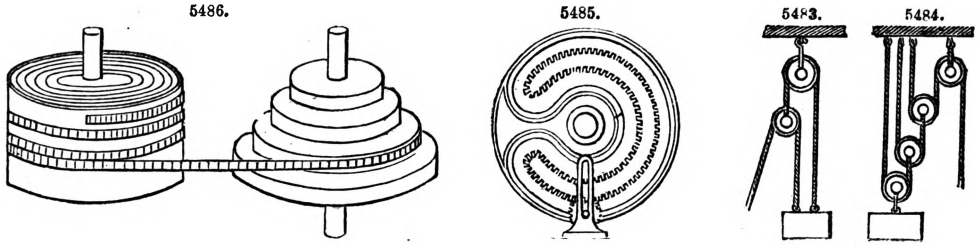

Fig. 5485. Mangle-wheel and pinion—so called from their application to mangles—converts continuous rotary motion of pinion into reciprocating rotary motion of wheel. The shaft of pinion has a vibratory motion, and works in a straight slot cut in the upright stationary bar to allow the pinion to rise and fall, and work inside and outside of the gearing of the wheel. The slot cut in the face of the mangle-wheel and following its outline is to receive and guide the pinion-shaft, and keep the pinion in gear.

Fig. 5486. Fusee-chain and spring-box, being the prime mover in some watches, particularly in those of English make. The fusee to the right is to compensate for the loss of force of the spring as it uncoils itself. The chain is on the small diameter of the fusee when the watch is wound up, as the spring has then the greatest force.

Fig. 5487. A frictional clutch-box, thrown in and out of gear by levers at the bottom. This is used for connecting and disconnecting heavy machinery. The eye of the disc to the right has a slot which slides upon a long key or feather fixed on the shaft.

Fig. 5488. Clutch-box. The pinion at the top gives a continuous rotary motion to the gear below, to which is attached half the clutch, and both turn loosely on the shaft. When it is desired to give motion to the shaft, the other part of the clutch, which slides upon a key or feather fixed in the shaft, is thrust into gear by the lever.

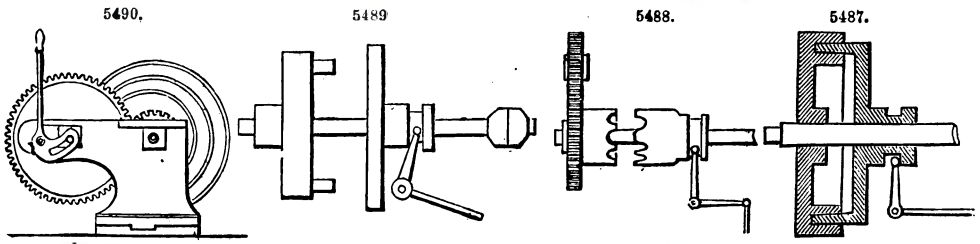

Fig. 5489. Another kind of clutch-box. The disc-wheel to the right has two holes corresponding to the studs fixed in the other disc; and being pressed against it, the studs enter the holes, when the two discs rotate together.

Fig. 5490. Used for throwing in and out of gear the speed motion on lathes. On depressing the lever, the shaft of the large wheel is drawn backward by reason of the slot in which it slides being cut eccentrically to the centre or fulcrum of the lever.

Fig. 5491 is a tilt-hammer motion, the revolution of the cam or wiper-wheel B lifting the hammer A four times in each revolution.

Fig. 5492. Intermittent alternating rectilinear motion is given to the rod A, by the continuous rotation of the shaft carrying the two cams or wipers, which act upon the projection B of the rod, and thereby lift it. The rod drops by its own weight. Used for ore-stampers or pulverizers, and for hammers.

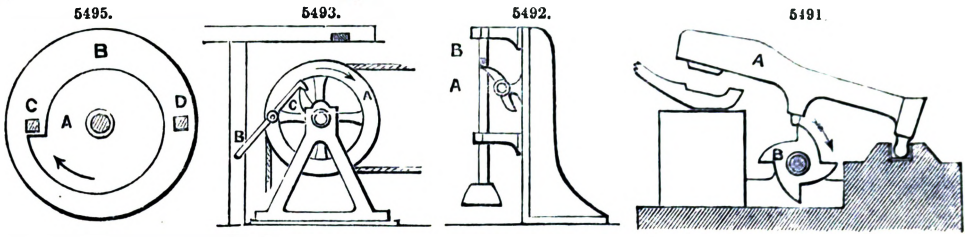

Fig. 5493. A method of working a reciprocating pump by rotary motion. A rope carrying the pump-rod is attached to the wheel A, which runs loosely upon the shaft. The shaft carries a cam C, and has a continuous rotary motion. At every revolution the cam seizes the hooked catch B, attached to the wheel, and drags it round, together with the wheel, and raises the rope until, on the extremity of the catch striking the stationary stop above, the catch is released, and the wheel is returned by the weight of the pump-bucket.

Fig. 5494. A contrivance for a self-reversing motion. The bevel-gear between the gears B and C is the driver. The gears B and C run loose upon the shaft, consequently motion is only communicated when one or other of them is engaged with the clutch-box D, which slides on a feather on the shaft, and is shown in gear with C. The wheel E, at the right, is driven by bevel-gearing from the shaft on which the gears B, C, and clutch are placed, and is about to strike the bell-crank G, and produce such a movement thereof as will cause the connecting rod to carry the weighted lever F beyond a perpendicular position, when the said lever will fall over suddenly to the left, and carry the clutch into gear with B, thereby reversing the motion of the shaft until the stud in the wheel E, coming round in the contrary direction, brings the weighted lever back past the perpendicular position, and again causes it to reverse the motion.

Fig. 5495. Continuous rotary converted into intermittent rotary motion. The disc-wheel B, carrying the stops C, D, turns on a centre eccentric to the cam A. On continuous rotary motion being given to the cam A, intermittent rotary motion is imparted to the wheel B, the stops free themselves from the offset of the cam at every half revolution, the wheel B remaining at rest until the cam has completed its revolution, when the same motion is repeated.

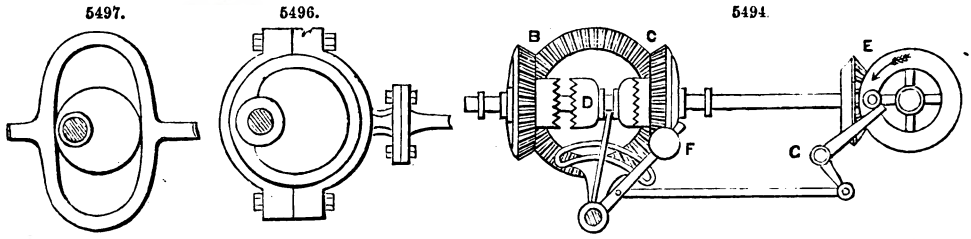

Fig. 5496. An eccentric generally used on the crank-shaft for communicating the reciprocating rectilinear motion to the valves of steam-engines, and sometimes used for pumping.

Fig. 5497. A modification of the above; an elongated yoke being substituted for the circular strap to obviate the necessity for any vibrating motion of the rod, which works in fixed guides.

Fig. 5498. Triangular eccentric, giving an intermittent rec procating rectilinear motion, used in France for the valve-motion of steam-engines.

Fig. 5499. Ordinary crank-motion.

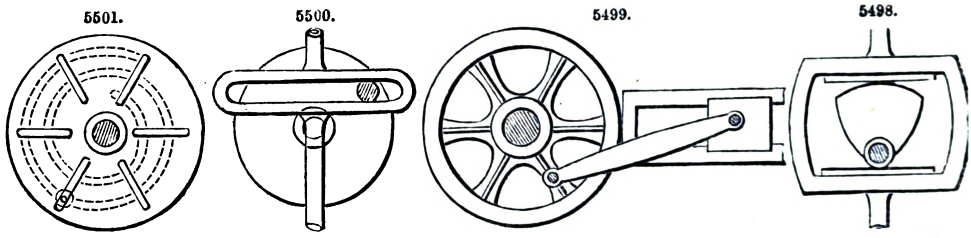

Fig. 5500. Crank-motion, with the crank-wrist working in a slotted yoke, thereby dispensing with the oscillating connecting-rod or pitman.

Fig. 5501. Variable crank, two circular plates revolving on the same centre. In one a spiral groove is cut; in the other a series of slots radiating from the centre. On turning one of these plates around its centre, the bolt shown near the bottom of the figure, and which passes through the spiral groove and radial slots, is caused to move toward or from the centre of the plates.

Fig. 5502. On rotating the upright shaft, reciprocating rectilinear motion is imparted by the oblique disc to the upright rod resting upon its surface.

Fig. 5503. A heart-cam. Uniform traversing motion is imparted to the horizontal bar by the rotation of the heart-shaped cam. The dotted lines show the mode of striking out the curve of the cam. The length of traverse is divided into any number of parts; and from the centre a series of concentric circles are described through these points. The outside circle is then divided into double the number of these divisions, and lines drawn to the centre. The curve is then drawn through the intersections of the concentric circles and the radiating lines.

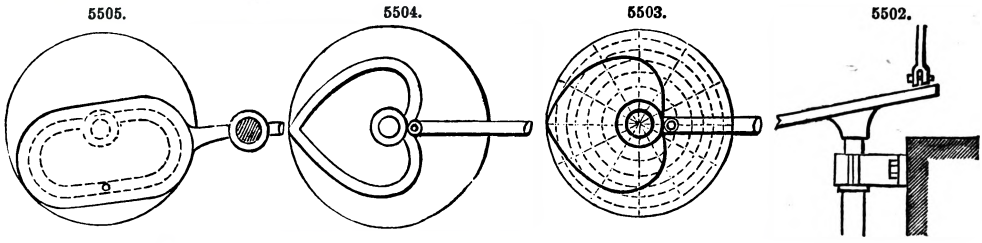

Fig. 5504. This is a heart-cam, similar to Fig. 5503, except that it is grooved.

Fig. 5505. Irregular vibrating motion is produced by the rotation of the circular disc, in which is fixed a crank-pin, working in an endless groove, cut in the vibrating arm.

Fig. 5506. Spiral guide attached to the face of a disc; used for the feed-motion of a drilling machine.

Fig. 5507. Quick return crank-motion, applicable to shaping machines.

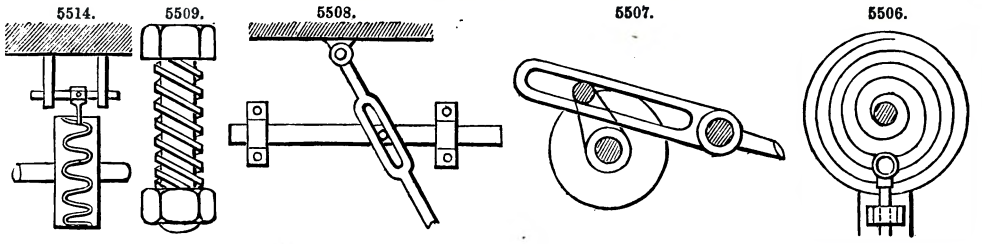

Fig. 5508. Rectilinear motion of horizontal bar, by means of vibrating slotted bar hung from the top.

Fig. 5509. Common screw bolt and nut; rectilinear motion obtained from circular motion.

Fig. 5510. Rectilinear motion of slide produced by the rotation of screw.

Fig. 5511. In this, rotary motion is imparted to the wheel by the rotation of the screw, or rectilinear motion of the slide by the rotation of the wheel. Used in screw-cutting and slide-lathes.

Fig. 5512. Screw stamping-press rectilinear motion from circular motion.

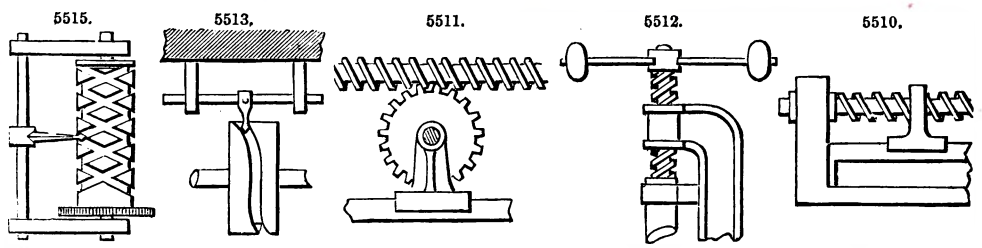

Figs. 5513, 5514. Uniform reciprocating rectilinear motion, produced by rotary motion of grooved cams.

Fig. 5515. Uniform reciprocating rectilinear motion from uniform rotary motion of a cylinder, in which are cut reverse threads or grooves, which necessarily intersect twice in every revolution. A point inserted in the groove will traverse the cylinder from end to end.

Fig. 5516. The rotation of the screw at the left-hand side produces a uniform rectilinear movement of a cutter, which cuts another screw-thread. The pitch of the screw to be cut may be varied by changing the sizes of the wheels at the end of the frame.

Fig. 5517. Uniform circular into uniform rectilinear motion; used in spooling frames for leading or guiding the thread on to the spools. The roller is divided into two parts, each having a fine screw-thread cut upon it, one a right and the other a left hand screw. The spindle, parallel with the roller, has arms which carry two half-nuts, fitted to the screws, one over and the other under the roller. When one half-nut is in, the other is out of gear. By pressing the lever to the right or left, the rod is made to traverse in either direction.

Fig. 5518. Micrometer screw. Great power can be obtained by this device. The threads are made of different pitch, and run in different directions; consequently a die or nut, fitted to the inner and smaller screw, would traverse only the length of the difference between the pitches for every revolution of the outside hollow screw in a nut.

Fig. 5519. Persian drill. The stock of the drill has a very quick thread cut upon it, and revolves freely, supported by the head at the top, which rests against the body. The button or nut,

shown on the middle of the screw, is held firm in the hand, and pulled quickly up and down the stock, thus causing it to revolve to the right and left alternately.

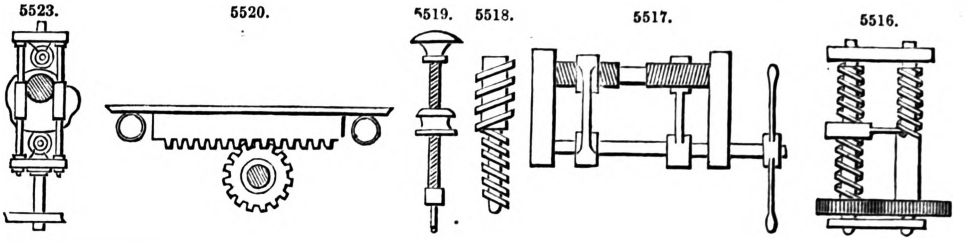

Fig. 5520. Circular into rectilinear motion, or the reverse, by means of rack and pinion.

Fig. 5521. Rotary motion of the toothed wheels produces rectilinear motion of the double rack, and gives equal force and velocity to each side, both wheels being of equal size.

Fig. 5522. A substitute for the crank. Reciprocating rectilinear motion of the frame carrying the double rack produces a uniform rotary motion of the pinion-shaft. A separate pinion is used for each rack, the two racks being in different planes. Both pinions are loose on the shaft. A ratchet-wheel is fast on the shaft outside of each pinion, and a pawl attached to the pinion to engage in it, one ratchet-wheel having its teeth set in one direction, and the other having its teeth set in the opposite direction. When the racks move one way, one pinion turns the shaft by means of its pawl and ratchet; and when the racks move the opposite way, the other pinion acts in the same way, one pinion always turning loosely on the shaft.

Fig. 5523. A cam acting between two friction-rollers in a yoke. Has been used to give the movement to the valve of a steam-engine.

Fig. 5524. A mode of doubling the length of stroke of a piston-rod, or the throw of a crank. A

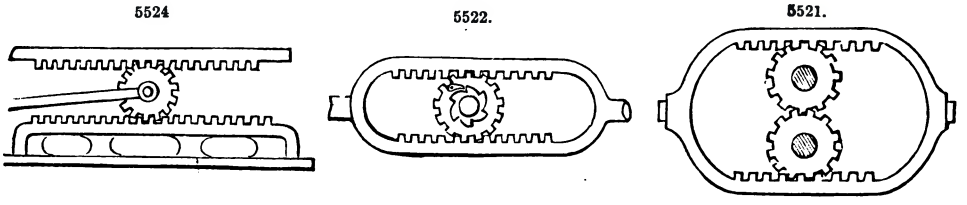

pinion revolving on a spindle attached to the connecting rod or pitman is in gear with a fixed rack. Another rack carried by a guide-rod above, and in gear with the opposite side of the pinion, is free to traverse backward and forward. Now, as the connecting rod communicates to the pinion the full length of stroke, it would cause the top rack to traverse the same distance, if the bottom rack was alike movable; but as the latter is fixed, the pinion is made to rotate, and consequently the top rack travels double the distance.

Fig. 5525. Reciprocating rectilinear motion of the bar carrying the oblong endless rack, produced by the uniform rotary motion of the pinion working alternately above and below the rack. The shaft of the pinion moves up and down in, and is guided by, the slotted bar.

Fig. 5526. Each jaw is attached to one of the two segments, one of which has teeth outside and the other teeth inside. On turning the shaft carrying the two pinions, one of which gears with one and the other with the other segment, the jaws are brought together with great force.

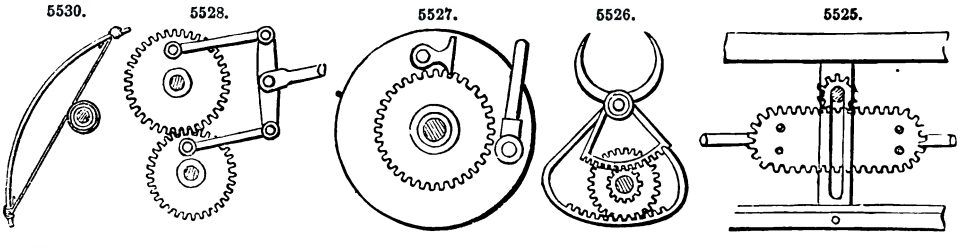

Fig. 5527. Alternating rectilinear motion of the rod attached to the disc-wheel produces an intermittent rotary motion of the cog-wheel by means of the click attached to the disc-wheel. This motion, which is reversible by throwing over the click, is used for the feed of planing machines and other tools.

Fig. 5528. The rotation of the two spur-gears, with crank-wrists attached, produces a variable alternating traverse of the horizontal bar.

Fig. 5529. Intended as a substitute for the crank. Reciprocating rectilinear motion of the double rack gives a continuous rotary motion to the centre gear. The teeth on the rack act upon those of the two semicircular toothed sectors, and the spur-gears attached to the sectors operate upon the centre gear. The two stops on the rack, shown by dotted lines, are caught by the curved piece on the centre gear, and lead the toothed sectors alternately into gear with the double rack.

Fig. 5530. Fiddle drill. Reciprocating rectilinear motion of the bow, the string of which passes around the pulley on the spindle carrying the drill, producing alternating rotary motion of the drill.

Fig. 5531. A modification of the motion shown in Fig. 5528, but of a more complex character,

Fig. 5532. A bell-crank lever, used for changing the direction of any force.

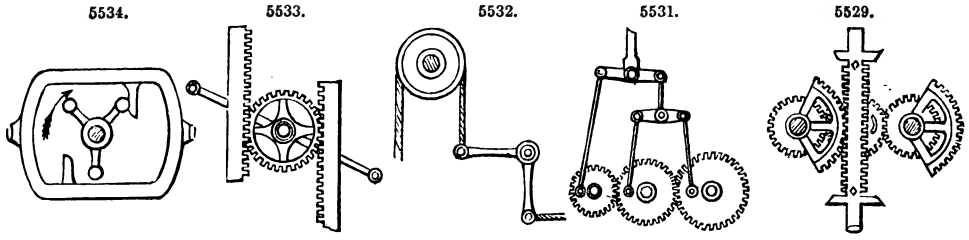

Fig. 5533. Motion used in air-pumps. On vibrating the lever fixed on the same shaft with the spur-gear, reciprocating rectilinear motion is imparted to the racks on each side, which are attached to the pistons of two pumps, one rack always ascending while the other is descending.

Fig. 5534. A continuous rotary motion of the shaft carrying the three wipers produces a reciprocating rectilinear motion of the rectangular frame. The shaft must revolve in the direction of the arrow for the parts to be in the position represented.

Fig. 5535. Chinese windlass. This embraces the same principles as the micrometer screw, Fig. 5516. The movement of the pulley in every revolution of the windlass is equal to half the difference between the larger and smaller circumferences of the windlass barrel.

Fig. 5536. Shears for cutting metal plates. The jaws are opened by the weight of the long arm of the upper one, and closed by the rotation of the cam.

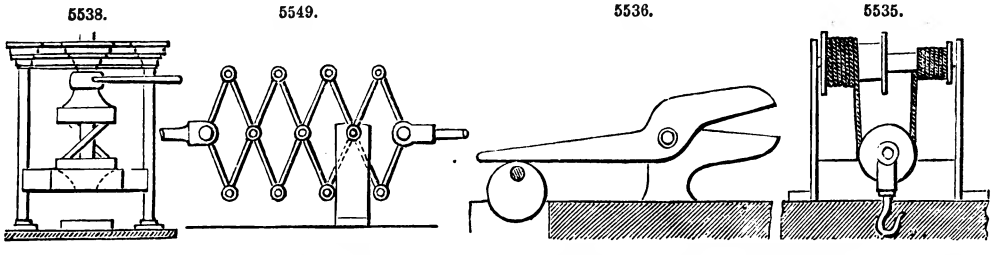

Fig. 5537. On rotating the disc carrying the crank-pin working in the slotted arm, reciprocating rectilinear motion is imparted to the rack at the bottom by the vibration of the toothed sector.

Fig. 5538. This is a motion which has been used in presses, to produce the necessary pressure upon the platen. Horizontal motion is given to the arm of the lever which turns the upper disc. Between the top and bottom discs are two bars which enter holes in the discs. These bars are in oblique positions, as shown in the drawing, when the press is not in operation; but when the top disc is made to rotate, the bars move toward perpendicular positions and force the lower disc down. The top disc must be firmly secured in a stationary position, except as to its revolution.

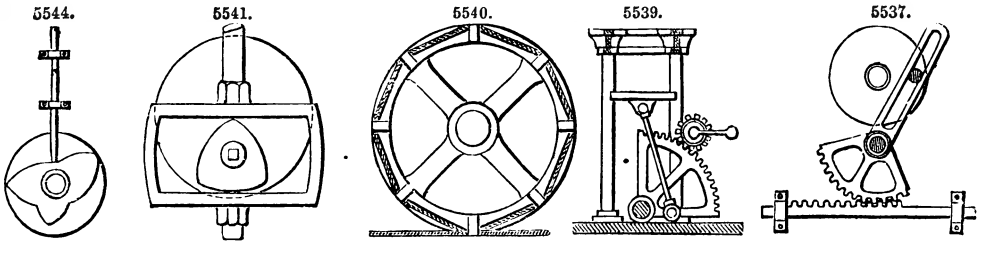

Fig. 5539. A simple press-motion is given through the hand-crank on the pinion-shaft, the pinion communicating motion to the toothed sector, which acts upon the platen, by means of the rod which connects it therewith.

Fig. 5540. Uniform circular motion into rectilinear, by means of a rope or band, which is wound several times around the drum.

Fig. 5541. Modification of the triangular eccentric, Fig. 5498, used on the steam-engine in the Paris Mint. The circular disc behind carries the triangular tappet, which communicates an alternate rectilinear motion to the valve-rod. The valve is at rest at the completion of each stroke for an instant, and is pushed quickly across the steam-ports to the end of the next.

Fig. 5542. A cam-wheel, of which a side view is shown, has its rim formed into teeth, or made of any profile form desired. The rod to the right is made to press constantly against the teeth or edge of the rim. On turning the wheel, alternate rectilinear motion is communicated to the rod. The character of this motion may be varied by altering the shape of the teeth, or profile of the edge of the rim of the wheel.

Fig. 5543. Expansion eccentric, used in France to work the slide-valve of a steam-engine. The eccentric is fixed on the crank-shaft, and communicates motion to the forked vibrating arm, to the bottom of which the valve-rod is attached.

Fig. 5544. On turning the cam at the bottom a variable alternating rectilinear motion is imparted to the rod resting on it.

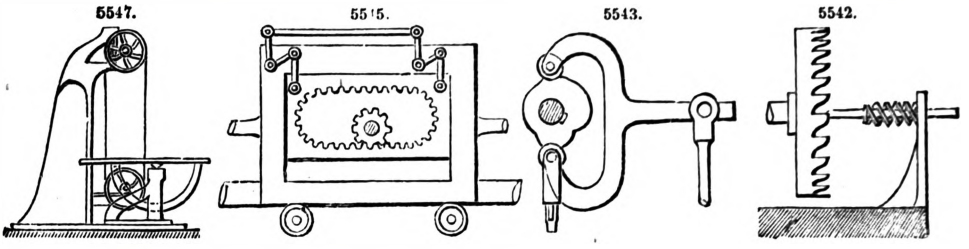

Fig. 5545. The internal rack, carried by the rectangular frame, is free to slide up and down within it for a certain distance, so that the pin on can gear with either side of the rack. Continuous circular motion of the pinion is made to produce reciprocating rectilinear motion of rectangular frame.

Fig. 5546. The toggle-joint arranged for a punching machine. Lever at the right is made to operate upon the joint of the toggle by means of the horizontal connecting link.

Fig. 5547. Endless-band saw. Continuous rotary motion of the pulleys is made to proudece continuous rectilinear motion of the straight parts of the saw.

Fig. 5548. Movement used for varying the length of the traversing guide-bar, which in silk machinery guides the silk on to spools or bobbins. The spur-gear, turning freely on its centre, is carried round by the larger circular disc, which turns on a fixed central stud, which has a pinion fast on its end. Upon the spur-gear is bolted a small crank, to which is jointed a connecting rod attached to traversing guide-bar. On turning the disc, the spur-gear is made to totate partly upon its centre by means of the fixed pinion, and consequently brings crank nearer to centre of disc. If the rotation of disc was continued, the spur-gear would make an entire revolution. During half a revolution the traverse would have been shortened a certain amount at every revolution of disc, according to the size of spur-gear; and during the other half it would have gradually lengthened in the same ratio.

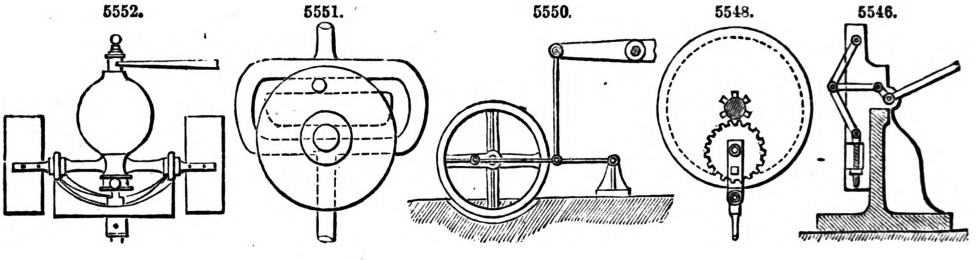

Fig. 5549. A system of crossed levers, termed lazy tongs. A short alternating rectilinear motion of rod at the right will give a similar but much greater motion to rod at the left. It is frequently used in children's toys. It has been applied in France to a machine for raising sunken vessels; also applied to ships' pumps three-quarters of a century ago.

Fig. 5550. Reciprocating curvilinear motion of the beam gives a continuous rotary motion to the crank and fly-wheel. The small standard at the right, to which is attached one end of the lever with which the beam is connected by the connecting rod, has a horizontal reciprocating rectilinear movement.

Fig. 5551. Continuous rotary motion of the disc produces reciprocating rectilinear motion of the yoke-bar, by means of the wrist or crank-pin on the disc working in the groove of the yoke. The groove may be so shaped as to obtain a uniform reciprocating rectilinear motion.

Fig. 5552. Steam-engine governor. The operation is as follows;—On engine starting, the spindle revolves and carries round the cross-head, to which fans are attached, and on which are also fitted two friction-rollers, which bear on two circular inclined planes attached securely to the centre shaft, the cross-head being loose on the shaft. The cross-head is made heavy or has a ball or other weight attached, and is driven by the circular inclined planes. As the speed of the centre shaft increases, the resistance of the air to the wings tends to retard the rotation of the cross-head; the friction-rollers, therefore, run up the inclined planes and raise the cross head, to the upper part of which is connected a lever operating upon the regulating valve of the engine.

Fig. 5553. Continuous circular motion of the spur-gears produces alternate circular motion of the crank attached to the larger gear.

Fig. 5554. Uniform circular converted, by the cams acting upon the levers, into alternating rectilinear motions of the attached rods.

Fig. 5555. A valve-motion for working steam expansively. The series of cams of varying throw are movable lengthwise of the shaft, so that either may be made to act upon the lever to which the valve-rod is connected. A greater or less movement of the valve is produced according as a cam of greater or less throw is opposite the lever.

Fig. 5556. An ellipsograph. The traverse bar, shown in an oblique position, carries two

studs which slide in the grooves of the cross-piece. By turning the traverse bar an attached pencil is made to describe an ellipse by the rectilinear movement of the studs in the grooves.

Fig. 5557. Circular motion into alternating rectilinear motion. The studs on the rotating disc strike the projection on the under side of the horizontal bar, moving it in one direction. The return motion is given by means of the bell-crank or elbow-lever, one arm of which is operated upon by the next stud, and the other strikes the stud on the front of the horizontal bar.

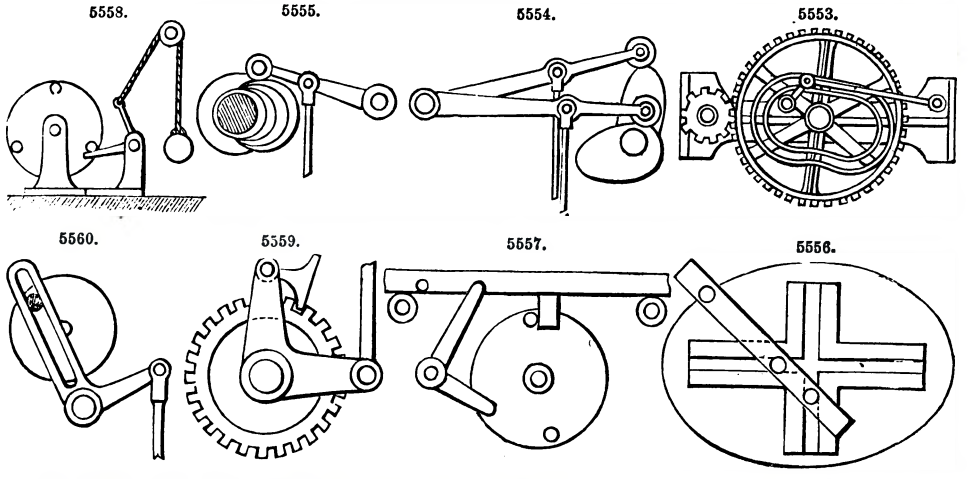

Fig. 5558. Circular motion into alternating rectilinear motion, by the action of the studs on the rotary disc upon one end of the bell-crank, the other end of which has attached to it a weighted cord passing over a pulley.

Fig. 5559. Reciprocating rectilinear motion into intermittent circular motion, by means of the pawl attached to the elbow-lever, and operating in the toothed wheel. Motion is given to the wheel in either direction according to the side on which the pawl works. This is used in giving the feed-motion to planing machines, and other tools.

Fig. 5560. Circular motion into variable alternating rectilinear motion, by the wrist or crank-pin on the rotating disc working in the slot of the bell-crank or elbow-lever.

Fig. 5561. A modification of the movement last described, a connecting rod being substituted for the slot in the bell-crank.

Fig. 5562. Reciprocating curvilinear motion of the treadle gives a circular motion to the disc. A crank may be substituted for the disc.

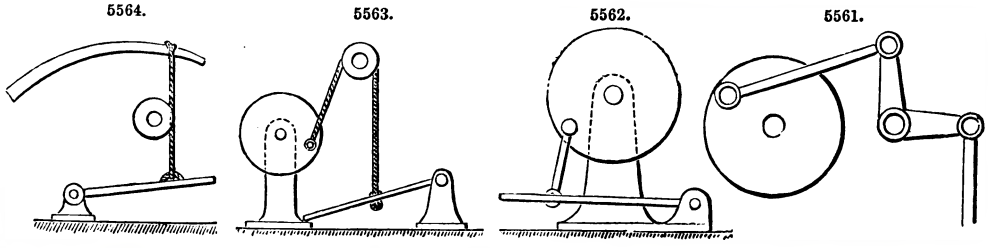

Fig. 5563. A modification of Fig. 5562, a cord and pulley being substituted for the connecting rod.

Fig. 5564. Alternating curvilinear motion into alternating circular. When the treadle has been depressed, the spring at the top elevates it for the next stroke; the connecting band passes once round the pulley, to which it gives motion.

Fig. 5565. Centrifugal governor for steam-engines. The central spindle and attached arms and balls are driven from the engine by the bevel-gears at the top, and the balls fly out from the centre by centrifugal force. If the speed of the engine increases, the balls fly out farther from the centre, and so raise the slide at the bottom, and thereby reduce the opening of the regulating valve which is connected with the slide. A diminution of speed produces an opposite effect.

Fig. 5566. Water-wheel governor acting on the same principle as Fig. 5565, but by different means. The governor is driven by the top horizontal shaft and bevel gears, and the lower gears control the rise and fall of the shuttle or gate over or through which the water flows to the wheel. The action is as follows;—The two bevel-gears on the lower part of the centre spindle, which are furnished with studs, are fitted loosely to the spindle, and remain at rest so long as the governor has a proper velocity; but immediately the velocity increases, the balls, flying farther out, draw up the pin which is attached to a loose sleeve which slides up and down the spindle, and this pin, coming in contact with the stud on the upper bevel-gear, causes that gear to rotate with the spindle, and to give motion to the lower horizontal shaft in such a direction as to make it raise the shuttle or gate, and so reduce the quantity of water passing to the wheel. On the contrary, if the speed of the governor decreases below that required, the pin falls and gives motion to the

lower bevel-gear, which drives the horizontal shaft in the opposite direction, and produces a contrary effect.

Fig. 5567. Another arrangement for a water-wheel governor. In this the governor controls the shuttle or gate by means of the cranked lever, which acts on the strap or belt in the following manner;—The belt runs on one of three pulleys, the middle one of which is loose on the governor spindle, and the upper and lower ones fast. When the governor is running at the proper speed the belt is on the loose pulley, as shown; but when the speed increases, the belt is thrown on the lower pulley, and thereby caused to act upon suitable gearing for raising the gate or shuttle and decreasing the supply of water. A reduction of the speed of the governor brings the belt on the upper pulley, which acts upon gearing for producing an opposite effect on the shuttle or gate.

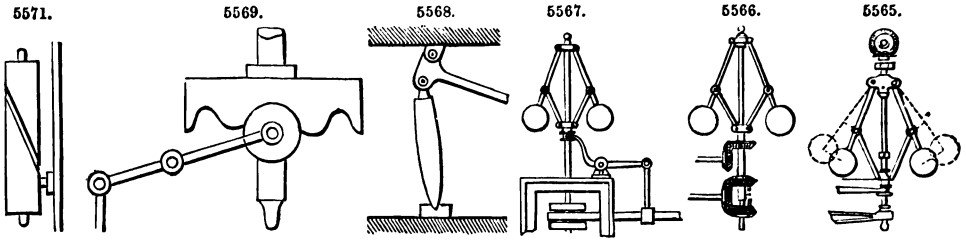

Fig. 5568. A knee-lever, differing slightly from the toggle-joint shown in Fig. 5546. It is often used for presses and stamps, as a great force can be obtained by it. The action is by raising or lowering the horizontal lever.

Fig. 5569. Circular into rectilinear motion. The waved wheel, or cam, on the upright shaft communicates a rectilinear motion to the upright bar through the oscillating rod.

Fig. 5570. The rotation of the disc carrying the crank-pin gives a to-and-fro motion to the connecting rod, and the slot allows the rod to remain at rest at the termination of each stroke. It has been used in a brick press, in which the connecting rod draws a mould backward and forward, and permits it to rest at the termination of each stroke, that the clay may be deposited in it and the brick extracted.

Fig. 5571. A drum, or cylinder, having an endless spiral groove extending all around it, one-half of the groove having its pitch in one, and the other half its pitch in the opposite direction. A stud on a reciprocating rectilinearly-moving rod works in the groove, and so converts reciprocating into rotary motion. This has been used as a substitute for the crank in a steam-engine, and as a means of transmitting motion in Foster's pressure gauge.

Fig. 5572. The slotted crank at the left hand of the figure is on the main shaft of an engine, and the pitman which connects it with the reciprocating moving power is furnished with a pin which works in the slot of the crank. Intermediate between the first crank and the moving power is a shaft carrying a second crank, of an invariable radius, connected with the same pitman. While the first crank moves in a circular orbit, the pin at the end of the pitman is compelled to move in an elliptical orbit, thus increasing the leverage of the main crank at those points which are most favourable for the transmission of power.

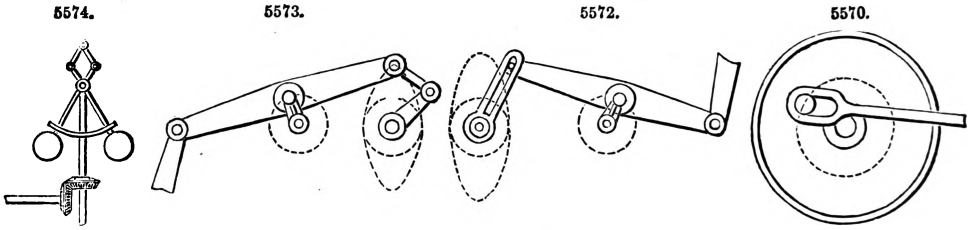

Fig. 5573. A modification of Fig. 5572, in which a link is used to connect the pitman with the main crank, thereby dispensing with the slot in the crank.

Fig. 5574. Another form of steam-engine governor. Instead of the arms being connected with a slide working on a spindle, they cross each other, and are elongated upward beyond the top, and connected with the valve-rod by two short links.

Fig. 5575. Valve-motion and reversing gear, used in oscillating marine engines. The two eccentric-rods give an oscillating motion to the slotted link, which works the curved slide over the trunnion. Within the slot in the curved slide is a pin attached to the arm of a rock-shaft, which gives motion to the valve. The curve of the slot in the slide is an arc of a circle, described from the centre of the trunnion, and as it moves with the cylinder it does not interfere with the stroke of the valve. The two eccentrics and links are like those of the link-motion used in locomotives.

Fig. 5576. A mode of obtaining an egg-shaped elliptical movement.

Fig. 5577. A movement used in silk machinery for the same purpose as that described in Fig. 5548. On the back of a disc or bevel-gear is secured a screw, with a tappet-wheel at one extremity. On each revolution of the disc the tappet-wheel comes in contact with a pin or tappet, and thus receives an intermittent rotary movement. A wrist, secured to a nut on the screw, enters and works in a slotted bar at the end of the rod, which guides the silk on the bobbins. Each revolution of the disc varies the length of stroke of the guide-rod, as the tappet-wheel on the end of the screw turns the screw with it, and the position of the nut on the screw is therefore changed.

Fig. 5578. Carpenters' bench-clamp. By pushing the clamp between the jaws they are made to turn on the screws and clamp the sides.

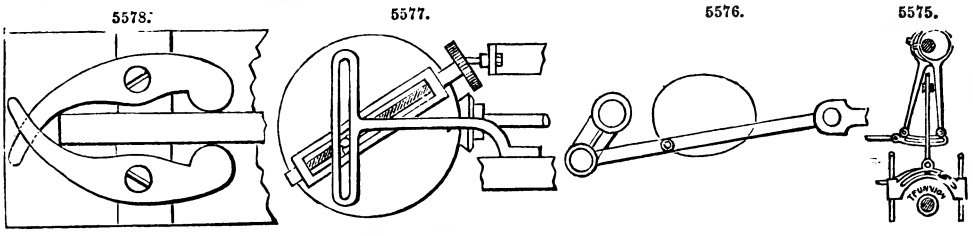

Fig. 5579. A means of giving one complete revolution to the crank of an engine to each stroke of the piston.

Figs. 5580, 5581. Contrivance for uncoupling engines. The wrist, which is fixed on one arm of the crank, not shown, will communicate motion to the arm of the crank which is represented, when the ring on the latter has its slot in the position shown in Fig. 5580. But when the ring is turned to bring the slot in the position shown in Fig. 5581, the wrist passes through the slot, without turning the crank to which the ring is attached.

Fig. 5582. Contrivance for varying the speed of the slide carrying the cutting tool in slotting and shaping machines. The driving shaft works through an opening in a fixed disc, in which is a circular slot. At the end of the shaft is a slotted crank. A slide fits in the slot of the crank and in the circular slot; and to the outward extremity of this slide is attached the connecting rod which works the slide carrying the cutting tool. When the driving shaft rotates, the crank is carried round, and the slide carrying the end of the connecting rod is guided by the circular slot, which is placed eccentrically to the shaft; therefore, as the slide approaches the bottom, the length of the crank is shortened, and the speed of the connecting rod is diminished.

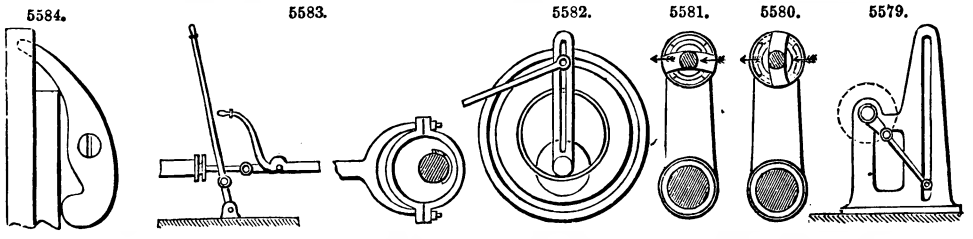

Fig. 5583. Reversing gear for a single engine. On raising the eccentric-rod the valve-spindle is released. The engine can then be reversed by working the upright lever, after which the eccentric-rod is let down again. The eccentric in this case is loose upon the shaft, and driven by a projection on the shaft acting upon a nearly semicircular projection on the side of the eccentric, which permits the eccentric to turn half-way round on the shaft on reversing the valves.

Fig. 5584. This only differs from Fig. 5578 in being composed of a single pivoted clamp operating in connection with a fixed side-piece.

Figs. 5585, 5586. Diagonal catch and hand-gear used in large blowing and pumping engines. In Fig. 5585 the lower steam-valve and upper eduction-valve are open, while the upper steam-valve and lower eduction-valve are shut; consequently the piston will be ascending. In the ascent of the piston-rod the lower handle will be struck by the projecting tappet, and being raised will become engaged by the catch, and shut the upper eduction and lower steam valves; at the same time the upper handle being disengaged from the catch, the back weight will pull the handle up and open the upper steam and lower eduction valves, when the piston will consequently descend. Fig. 5586 represents the position of the catches and handles when the piston is at the top of the cylinder. In going down, the tappet of the piston-rod strikes the upper handle, and throws the catches and handles to the position shown in Fig. 5585.

Figs. 5587, 5588, represent a modification of Figs. 5585, 5586, the diagonal catches being superseded by two quadrants.

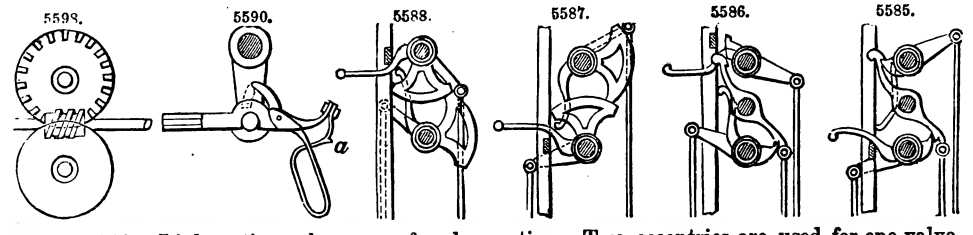

Fig. 5589. Link-motion valve-gear of a locomotive. Two eccentrics are used for one valve, one for the forward and the other for the backward movement of the engine. The extremities of the eccentric-rods are jointed to a curved slotted bar, or, as it is termed, a link, which can be raised or lowered by an arrangement of levers terminating in a handle as shown. In the slot of the link is a slide and pin connected with an arrangement of levers terminating at the valve-stem. The

link, in moving with the action of the eccentrics, carries with it the slide, and thence motion is communicated to the valve. Suppose the link raised, so that the slide is in the middle, then the link will oscillate on the pin of the slide, and consequently the valve will be at rest. If the link is moved so that the slide is at one of its extremities, the whole throw of the eccentric connected with that extremity will be given to it, and the valve and steam-ports will be opened to the full, and it will only be toward the end of the stroke that they will be totally shut; consequently the steam will have been admitted to the cylinder during almost the entire length of each stroke. But if the slide is between the middle and the extremity of the slot, as shown in the figure, it receives only a part of the throw of the eccentric, and the steam-ports will only be partially opened, and are quickly closed again, so that the admission of steam ceases some time before the termination of the stroke, and the steam is worked expansively. The nearer the slide is to the middle of the slot the greater will be the expansion, and *vice versâ*.

Fig. 5590. Apparatus for disengaging the eccentric-rod from the valve-gear. By pulling up the spring handle below until it catches in the notch *a*, the pin is disengaged from the gab in the eccentric-rod.

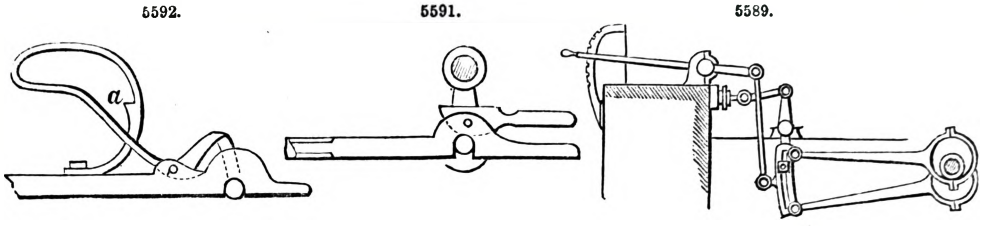

Figs. 5591, 5592. Modifications of Fig. 5590.

Fig. 5593. Another modification of Fig. 5590.

Fig. 5594. A screw-clamp. On turning the handle the screw thrusts upward against the holder, which, operating as a lever, holds down the piece of wood or other material placed under it on the other side of its fulcrum.

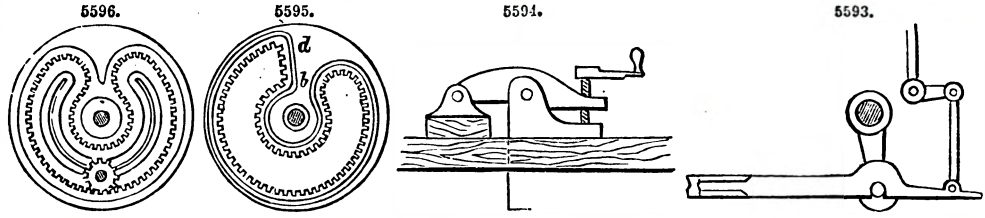

Fig. 5595. A variety of what is known as the mangle-wheel. One variety of this was illustrated by Fig. 5469. In this one the speed varies in every part of a revolution, the groove *b*, *d*, in which the pinion-shaft is guided, as well as the series of teeth, being eccentric to the axis of the wheel.

Fig. 5596. Another kind of mangle-wheel, with its pinion. With this as well as with that in the preceding figure, although the pinion continues to revolve in one direction, the mangle-wheel will make almost an entire revolution in one direction and the same in an opposite direction; but the revolution of the wheel in one direction will be slower than that in the other, owing to the greater radius of the outer circle of teeth.

Fig. 5597. Another mangle-wheel. In this the speed is equal in both directions of motion, only one circle of teeth being provided on the wheel. With all of these mangle-wheels the pinion-shaft is guided, and the pinion kept in gear, by a groove in the wheel. The said shaft is made with a universal joint, which allows a portion of it to have the vibratory motion necessary to keep the pinion in gear.

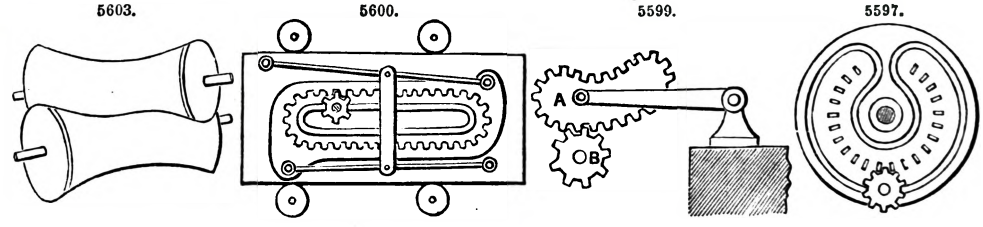

Fig. 5598. A mode of driving a pair of feed-rolls, the opposite surfaces of which require to move in the same direction. The two wheels are precisely similar, and both gear into the endless screw which is arranged between them. The teeth of one wheel only are visible, those of the other being on the back or side which is concealed from view.

Fig. 5599. The pinion B rotates about a fixed axis, and gives an irregular vibratory motion to the arm carrying the wheel A.

Fig. 5600. A modification of what is called a mangle-rack, Fig. 3211. In this the pinion

revolves, but does not rise and fall as in the former figure. The portion of the frame carrying the rack is jointed to the main portion of the frame by rods, so that when the pinion arrives at the end it lifts the rack by its own movement, and follows on the other side.

Fig. 5601. Another form of mangle-rack. The lantern-pinion revolves continuously in one direction, and gives reciprocating motion to the square frame, which is guided by rollers or grooves. The pinion has only teeth in less than half of its circumference, so that while it engages one side of the rack, the toothless half is directed against the other. The large tooth at the commencement of each rack is made to ensure the teeth of the pinion being properly in gear.

Fig. 5602. A regular vibrating movement of the curved slotted arm gives a variable vibration to the straight arm.

Fig. 5603. An illustration of the transmission of rotary motion from one shaft to another, arranged obliquely to it, by means of rolling contact.

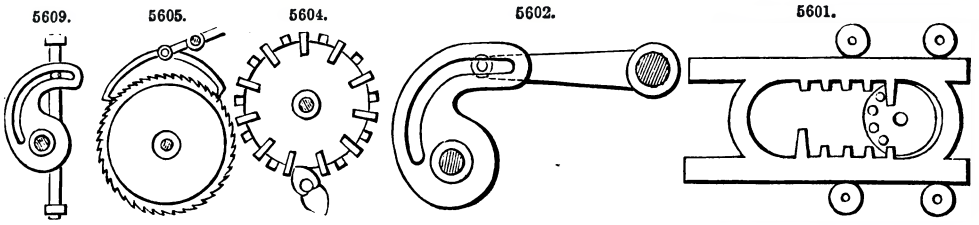

Fig. 5604 represents a wheel driven by a pinion of two teeth. The pinion consists in reality of two cams, which gear with two distinct series of teeth on opposite sides of the wheel, the teeth of one series alternating in position with those of the other.

Fig. 5605. A continuous circular movement of the ratchet-wheel, produced by the vibration of the lever carrying two pawls, one of which engages the ratchet-teeth in rising and the other in falling.

Fig. 5606. A modification of Fig. 5598, by means of two worms and worm-wheels.

Fig. 5607. A pin-wheel and slotted pinion, by which three changes of speed can be obtained. There are three circles of pins of equal distance on the face of the pin-wheel, and by shifting the slotted pinion along its shaft, to bring it in contact with one or the other of the circles of pins, a continuous rotary motion of the wheel is made, to produce three changes of speed of the pinion.

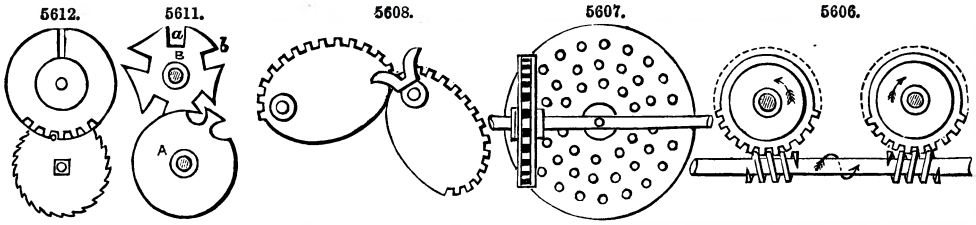

Fig. 5608 represents a mode of obtaining motion from rolling contact. The teeth are for making the motion continuous, or it would cease at the point of contact shown in the figure. The forked catch is to guide the teeth into proper contact.

Fig. 5609. By turning the shaft carrying the curved slotted arm, a rectilinear motion of variable velocity is given to the variable bar.

Fig. 5610. A continuous rotary motion of the large wheel gives an intermittent rotary motion to the pinion-shaft. The part of the pinion shown next the wheel is cut of the same curve as the plain portion of the circumference of the wheel, and therefore serves as a lock while the wheel makes a part of a revolution, and until the pin upon the wheel strikes the guide-piece upon the pinion, when the pinion-shaft commences another revolution.

Fig. 5611. What is called the Geneva-stop, used in Swiss watches to limit the number of revolutions in winding-up; the convex curved part *a*, *b*, of the wheel B, serving as the stop.

Fig. 5612. Another kind of stop for the same purpose.

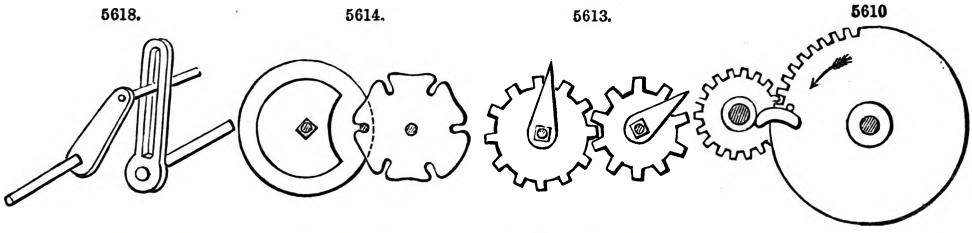

Figs. 5613, 5614. Other modifications of the stop, the operations of which will be easily understood by comparison with Fig. 5611.

Fig. 5615. The external and internal mutilated cog-wheels work alternately into the pinion, and give slow forward and quick reverse motion.

Figs. 5616, 5617. These are parts of the same movement, which has been used for giving the roller motion in wool-combing machines. The roller to which wheel F, Fig. 5617, is secured, is required to make one-third of a revolution backward, then two-thirds of a revolution forward, when it must stop until another length of combed fibre is ready for delivery. This is accomplished by the grooved heart-cam C, D, B, *e*, Fig. 5616, the stud A working in the said groove; from C to D it moves the roller backward, and from D to *e* it moves it forward, the motion being transmitted through the catch G, to the notch-wheel F, on the roller-shaft H. When the stud A arrives at the point *e* in the cam, a projection at the back of the wheel which carries the cam strikes the projecting piece on the catch G, and raises it out of the notch in the wheel F, so that while the stud is travelling in the cam from *e* to C, the catch is passing over the plain surface between the two notches in the wheel F, without imparting any motion; but when stud A arrives at the part C, the catch has dropped in another notch and is again ready to move wheel F and roller as required.

Fig. 5618. The two crank-shafts are parallel in direction, but not in line with each other. The revolution of either will communicate motion to the other with a varying velocity, for the wrist of one crank working in the slot of the other is continually changing its distance from the shaft of the latter.

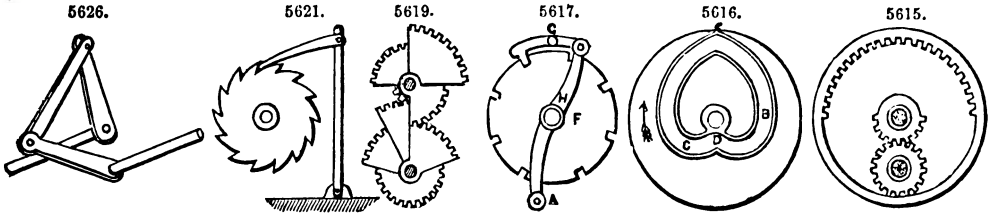

Fig. 5619. An arrangement for obtaining variable circular motion. The sectors are arranged on different planes, and the relative velocity changes according to the respective diameters of the sectors.

Fig. 5620. This represents an expanding pulley. On turning pinion *d* to the right or left, a similar motion is imparted to wheel *c*, which, by means of curved slots cut therein, thrusts the studs fastened to arms of pulley outward or inward, thus augmenting or diminishing the size of the pulley.

Fig. 5621. Intermittent circular motion of the ratchet-wheel from vibratory motion of the arm carrying a pawl.

Fig. 5622 represents a chain and chain pulley. The links being in different planes, spaces are left between them for the teeth of the pulley to enter.

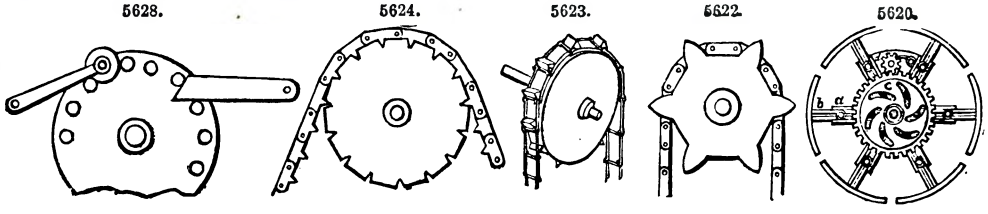

Fig. 5623. Another kind of chain and pulley.

Fig. 5624. Another variety.

Fig. 5625. Transmitted circular motion. The connecting rods are so arranged that when one pair of connected links is over the dead-point, or at the extremity of its stroke, the other is at right angles; continuous motion is thus ensured without a fly-wheel.

Fig. 5626. Drag-link motion. Circular motion is transmitted from one crank to the other.

Fig. 5627. Intermittent circular motion is imparted to the toothed wheel by vibrating the arm B. When the arm B is lifted, the pawl C is raised from between the teeth of the wheel, and travelling backward over the circumference again drops between two teeth on lowering the arm, and draws with it the wheel.

Fig. 5628 shows two different kinds of stops for a lantern-wheel.

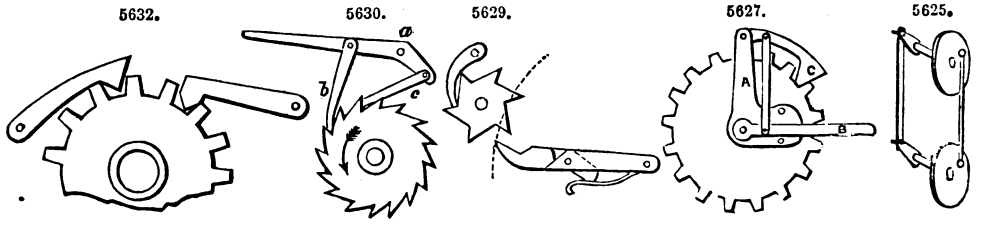

Fig. 5629. The oscillating of the tappet-arm produces an intermittent rotary motion of the ratchet-wheel. The small spring at the bottom of the tappet-arm keeps the tappet in the position shown in the drawing, as the arm rises, yet allows it to pass the teeth on the return motion.

Fig. 5630. A nearly continuous circular motion is imparted to the ratchet-wheel on vibrating the lever *a*, to which the two pawls *b* and *c* are attached.

Fig. 5631. A reciprocating circular motion of the top arm makes its attached pawl produce an intermittent circular motion of the crown-ratchet, or rag-wheel.

Fig. 5632. An arrangement of stops for a spur-gear.

Fig. 5633 represents varieties of stops for a ratchet-wheel.

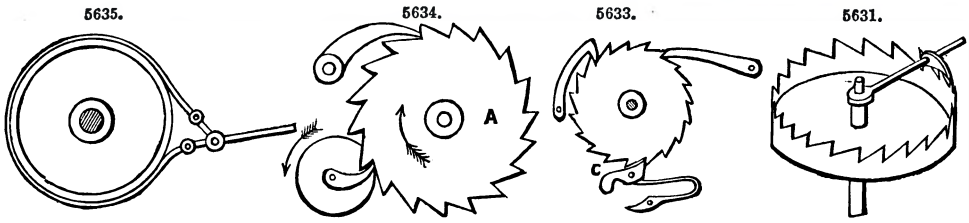

Fig. 5634. Intermittent circular motion is imparted to the wheel A by the continuous circular motion of the smaller wheel with one tooth.

Fig. 5635. A brake used in cranes and hoisting machines. By pulling down the end of the lever, the ends of the brake-strap are drawn toward each other, and the strap tightened on the brake-wheel.

Fig. 5636. A dynamometer, or instrument used for ascertaining the amount of useful effect given out by any motive power. It is used as follows;—A is a smoothly-turned pulley, secured on a shaft as near as possible to the motive power. Two blocks of wood are fitted to this pulley, or one block of wood and a series of straps fastened to a band or chain, as in the drawing, instead of a common block. The blocks, or block and straps, are so arranged that they may be made to bite or press upon the pulley by means of the screws and nuts on the top of the lever D. To estimate the amount of power transmitted through the shaft, it is only necessary to ascertain the amount of friction of the drum A when it is in motion, and the number of revolutions made. At the end of the lever D is hung a scale B, in which weights are placed. The two stops C, C', are to maintain the lever as nearly as possible in a horizontal position. Now, suppose the shaft to be in motion, the screws are to be tightened and weights added in B, until the lever takes the position shown in the drawing, at the required number of revolutions. Therefore, the useful effect would be equal to the product of the weights, multiplied by the velocity at which the point of suspension of the weights would revolve if the lever were attached to the shaft.

Fig. 5637 represents a pantograph for copying, enlarging, and reducing plans. One arm is attached to and turns on the fixed point C. B is an ivory tracing point, and A the pencil. Arranged as shown, if we trace the lines of a plan with the point B, the pencil will reproduce it double the size. By shifting the slide attached to the fixed point C, and the slide carrying the pencil along their respective arms, the proportion to which the plan is traced will be varied.

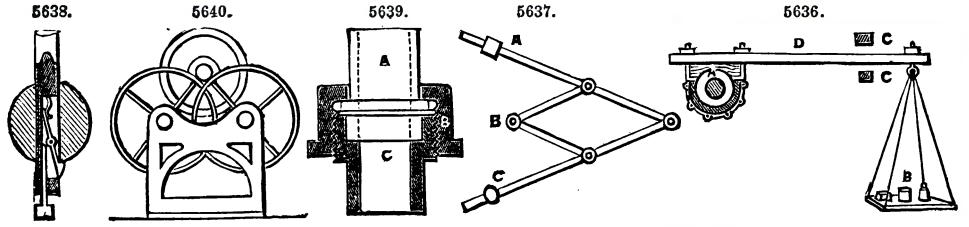

Fig. 5638. A mode of releasing a sounding weight. When the piece projecting from the bottom of the rod strikes the bottom of the sea, it is forced upward relatively to the rod, and withdraws the catch from under the weight, which drops off and allows the rod to be lifted without it.

Fig. 5639. Union coupling. A is a pipe, with a small flange abutting against the pipe C, with a screwed end; B, a nut which holds them together.

Fig. 5640. Anti-friction bearing. Instead of a shaft revolving in an ordinary bearing, it is sometimes supported on the circumference of wheels. The friction is thus reduced to the least amount.

Fig. 5641. Releasing hook used in pile-driving machines. When the weight W is sufficiently raised, the upper ends of the hooks A, by which it is suspended, are pressed inward by the sides of the slot B, in the top of the frame; the weight is thus suddenly released, and falls with accumulating force on to the pile-head.

Fig. 5642. A and B are two rollers, which require to be equally moved to and fro in the slot C. This is accomplished by moving the piece D, with oblique slotted arms, up and down.

Fig. 5643. Centrifugal check-hooks, for preventing accidents in case of the breakage of machinery, which raises and lowers workmen, or ores, in mines. A is a framework fixed to the side of the shaft of the mine, and having fixed studs D, attached. The drum on which the rope is wound is provided with a flange B, to which the check-hooks are attached. If the drum acquires a dangerously rapid motion, the hooks fly out by centrifugal force, and one or other, or all of them, catch hold of the studs D, and arrest the drum, and stop the descent of whatever is attached to the rope. The drum ought, besides this, to have a spring applied to it, otherwise the jerk arising from the sudden stoppage of the rope might produce worse effects than its rapid motion.

Fig. 5644. A sprocket-wheel to drive or to be driven by a chain.

Fig. 5645. A differential movement. The screw C works in a nut secured to the hub of the wheel E, the nut being free to turn in a bearing in the shorter standard, but prevented by the bearing from any lateral motion. The screw-shaft is secured in the wheel D. The driving shaft A carries two pinions F and B. If these pinions were of such size as to turn the two wheels D and E with an equal velocity, the screw would remain at rest; but the said wheels being driven at unequal velocities, the screw travels according to the difference of velocity.

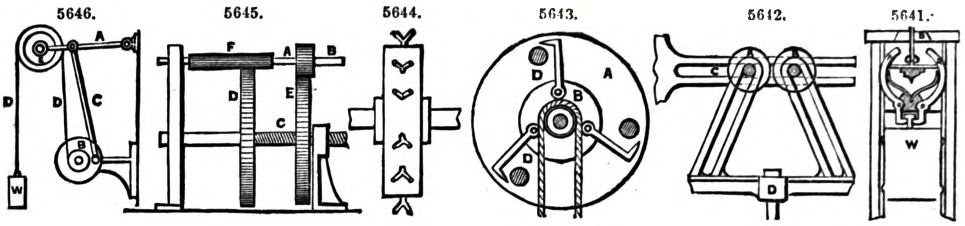

Fig. 5646. A combination movement, in which the weight W moves vertically with a reciprocating movement, the down-stroke being shorter than the up-stroke. B is a revolving disc, carrying a drum, which winds round itself the cord D. An arm C is jointed to the disc and to the upper arm A, so that when the disc revolves, the arm A moves up and down, vibrating on the point G. This arm carries with it the pulley E. Suppose we detach the cord from the drum and tie it to a fixed point, and then move the arm A up and down, the weight W will move the same distance, and in addition the movement given to it by the cord, that is to say, the movement will be doubled. Now, let us attach the cord to the drum, and revolve the disc B, and the weight will move vertically with the reciprocating motion, in which the down-stroke will be shorter than the up-stroke, because the drum is continually taking up the cord.

Figs. 5647, 5648. The first of these figures is an end view, and the second a side view, of an arrangement of mechanism for obtaining a series of changes of velocity and direction. D is a screw on which is placed eccentrically the cone B, and C is a friction-roller, which is pressed against the cone by a spring or weight. Continuous rotary motion, at a uniform velocity of the screw D carrying the eccentric cone, gives a series of changes of velocity and direction to the roller C. It will be understood that during every revolution of the cone the roller would press against a different part of the cone, and that it would describe thereon a spiral of the same pitch as the screw D. The roller C would receive a reciprocating motion, the movement in one direction being shorter than that in the other.

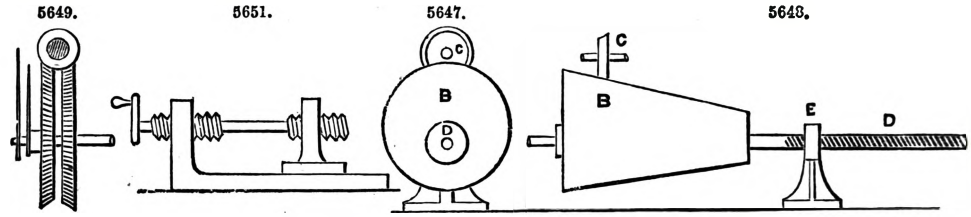

Fig. 5649. Two worm-wheels of equal diameter, but one having one tooth more than the other, both in gear with the same worm. Suppose the first wheel has 100 teeth and the second 101, one wheel will gain one revolution over the other during the passage of 100 × 101 teeth of either wheel across the plane of centres, or during 10,000 revolutions of the worm.

Fig. 5650. Variable motion. If the conical drum has a regular circular motion, and the friction-roller is made to traverse lengthwise, a variable rotary motion of the friction-roller will be obtained.

Fig. 5651. The shaft has two screws of different pitches cut on it, one screwing into a fixed bearing, and the other into a bearing free to move to and fro. Rotary motion of the shaft gives rectilinear motion to the movable bearing, a distance equal to the difference of pitches at each revolution.

Fig. 5652. 'Circular into reciprocating motion by means of a crank and oscillating rod.

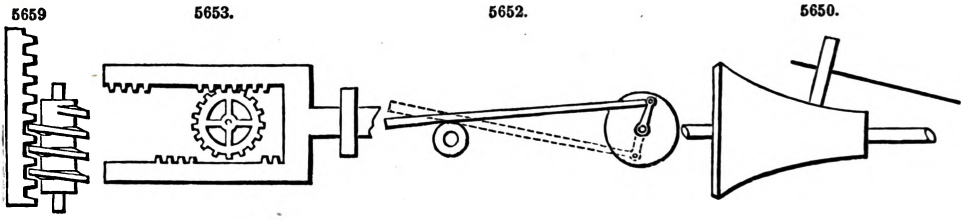

Fig. 5653. Continued rectilinear movement of the frame with mutilated racks, gives an alternate rotary motion to the spur-gear.

Fig. 5654. Anti-friction bearing for a pulley.

Fig. 5655. On vibrating the lever to which the two pawls are attached, a nearly continuous rectilinear motion is given to the ratchet-bar.

Fig. 5656. Rotary motion of the bevelled disc cam gives a reciprocating rectilinear motion to the rod bearing on its circumference.

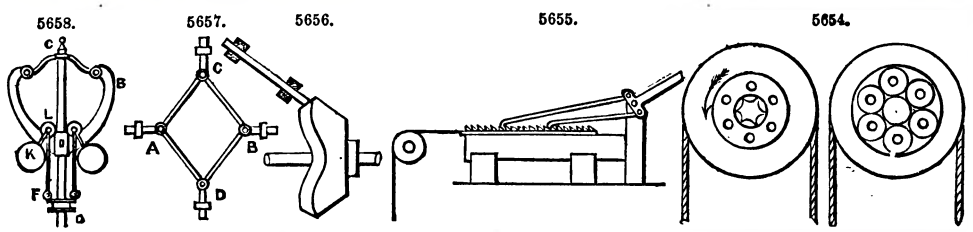

Fig. 5657. Rectilinear into rectilinear motion. When the rods A and B are brought together, the rods C and D are thrust farther apart, and the reverse.

Fig. 5658. An engine-governor. The rise and fall of the balls K are guided by the parabolic curved arms B, on which the anti-friction wheels L run. The rods F, connecting the wheels L with the sleeve, move it up and down the spindle C, D.

Fig. 5659. Rotary motion of the worm gives a rectilinear motion to the rack.

Fig. 5660. Continuous rotary motion of the cam gives a reciprocating rectilinear motion to the bar. The cam is of equal diameter in every direction measured across its centre.

Fig. 5661. Colt's invention for obtaining the movement of the cylinder of a revolving fire-arm by the act of cocking the hammer. As the hammer is drawn back to cock it, the dog *a*, attached to the tumbler, acts on the ratchet *b*, on the back of the cylinder. The dog is held up to the ratchet by a spring *c*.

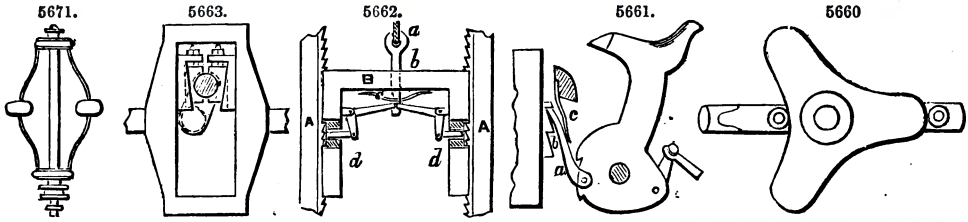

Fig. 5662. C. R. Otis's safety-stop for the platform of a hoisting apparatus. A are the stationary uprights, and B is the upper part of the platform working between them. The rope *a*, by which the platform is hoisted, is attached by a pin *b* and spring *c*, and the pin is connected by two elbow-levers with two pawls *d*, which work in ratchets secured to the uprights A. The weight of the platform and the tension of the rope, keep the pawls out of gear from the ratchets in hoisting or lowering the platform, but, in case of the breakage of rope, the spring *c* presses down the pin *b* and the attached ends of the levers, and so presses the pawls into the ratchets and stops the descent of the platform.

Fig. 5663. Crank and slotted cross-head, with Clayton's sliding journal-box applied to the crank-wrist. This box consists of two taper lining pieces and two taper jibs adjustable by screws, which serve at the same time to tighten the box on the wrist, and to set it out to the slot in the cross-head as the box and wrist wear.

Fig. 5664. A mode of working a windlass. By the alternating motion of the long hand-lever to the right, motion is communicated to the short lever, the end of which is in immediate contact with the rim of the wheel. The short lever has a very limited motion upon a pin, which is fixed in a block of cast iron, which is made with two jaws, each having a flange projecting inward in contact with the inner surface of the rim of the wheel. By the upward motion of the outward end of the short lever, the rim of the wheel is jammed between the end of the lever and the flanges of the block, so as to cause friction sufficient to turn the wheel by the further upward movement of the lever. The backward movement of the wheel is prevented by a common ratchet-wheel and pawls; as the short lever is pushed down it frees the wheel and slides freely over it.

Fig. 5665. The revolution of the disc causes the lever at the right to vibrate, by the pin moving in the groove in the face of the disc.

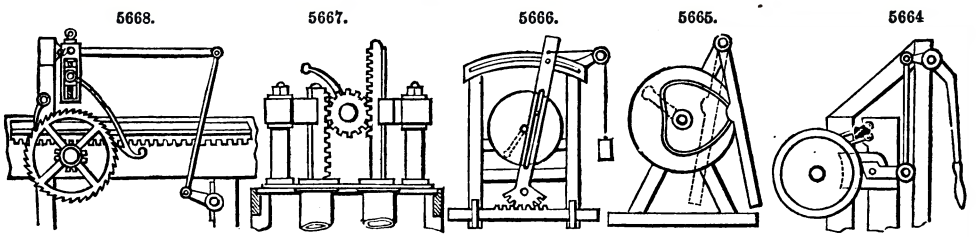

Fig. 5666. By the revolution of the disc, in which is fixed a pin working in a slot in the upright bar which turns on a centre near the bottom, both ends of the bar are made to traverse,

the toothed sector producing alternate rectilinear motion in the horizontal bar at the bottom, and also alternate perpendicular motion of the weight.

Fig. 5667. By a vibrating motion of the handle, motion is communicated by the pinion to the racks. This is used in working small air-pumps for scientific experiments.

Fig. 5668 represents a feeding apparatus for the bed of a sawing machine. By the revolution of the crank at the lower part of the figure, alternate motion is communicated to the horizontal arm of the bell-crank lever, whose fulcrum is at *a*, near the top left-hand corner of the figure. By this means, motion is communicated to the catch attached to the vertical arm of the lever, and the said catch communicates motion to the ratchet-wheel, upon the shaft of which is a toothed pinion, working in the rack attached to the side of the carriage. The feed is varied by a screw in the bell-crank lever.

Fig. 5669 is the movable head of a turning lathe. By turning the wheel to the right, motion is communicated to the screw, producing rectilinear motion of the spindle, in the end of which the centre is fixed.

Fig. 5670. Toe and lifter for working poppet-valves in steam-engines. The curved toe on the rock-shaft operates on the lifter attached to the lifting rod to raise the valve.

Fig. 5671. Pickering's governor. The balls are attached to springs, the upper end of each of which is attached to a collar fixed on the spindle, and the lower end to a collar on the sliding sleeve. The springs yield in a proper degree to the centrifugal force of the balls, and raise the sleeve; and as the centrifugal force diminishes, they draw the balls toward the spindle and depress the sleeve.

Fig. 5672. Conical pendulum, hung by a thin piece of round wire. Lower end connected with and driven in a circle by an arm attached to a vertical rotating spindle. The pendulum-rod describes a cone in its revolution.

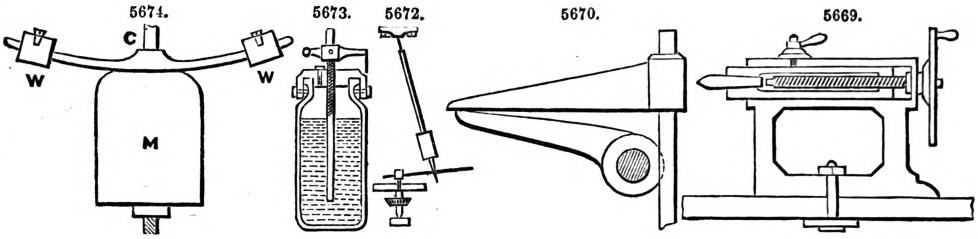

Fig. 5673. Mercurial compensation pendulum. A glass jar of mercury is used for the bob or weight. As the pendulum-rod is expanded lengthwise by increased temperature, the expansion of mercury in the jar carries it to a greater height therein, and so raises its centre of gravity relatively to the rod sufficiently to compensate for downward expansion of the rod. As rod is contracted by a reduction of temperature, contraction of mercury lowers it relatively to rod. In this way the centre of oscillation is always kept in the same place, and the effective length of pendulum always the same.

Fig. 5674. Compound bar compensation pendulum. C is a compound bar of brass and iron, or steel brazed together with brass downward. As brass expands more than iron, the bar will bend upward as it gets warmer, and carry the weights W, W, up with it, raising the centre of the aggregate weight M, to raise the centre of oscillation as much as elongation of the pendulum-rod would let it down.

Fig. 5675. Watch regulator. The balance-spring is attached at its outer end to a fixed stud R, and at its inner end to staff of balance. A neutral point is formed in the spring at P, by inserting it between two curb-pins in the lever, which is fitted to turn on a fixed ring concentric with staff of balance, and the spring only vibrates between this neutral point and staff of balance. By moving lever to the right, the curb-pins are made to reduce the length of acting part of spring, and the vibrations of balance are made faster, and by moving it to left an opposite effect is produced.

Fig. 5676. Compensation balance. *t*, *a*, *t'*, is the main bar of balance, with timing screws for regulation at the ends. *t* and *t'* are two compound bars, of which the outside is brass and the inside steel, carrying weights *b*, *b'*. As heat increases, these bars are bent inward by the greater expansion of the brass, and the weights are thus drawn inward, diminishing the inertia of the balance. As the heat diminishes, an opposite effect is produced. This balance compensates both for its own expansion and contraction, and that of the balance-spring.

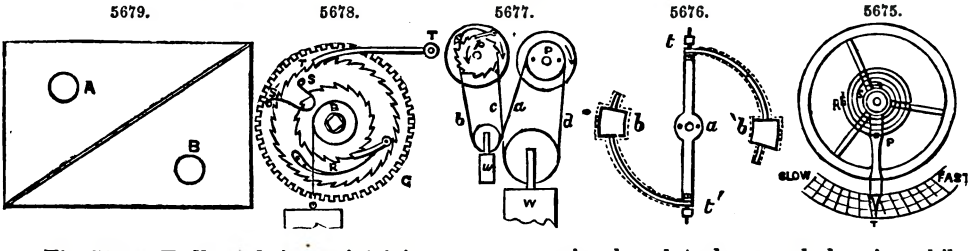

Fig. 5677. Endless chain, maintaining power on going barrel, to keep a clock going while winding, during which operation the action of the weight or main-spring is taken off the barrel. The wheel to the right is the going wheel, and that to the left the strikin wheel. P is a

pulley fixed to the great wheel of the going part, and roughened, to prevent a rope or chain hung over it from slipping. A similar pulley rides on another arbor *p*, which may be the arbor of the great wheel of the striking part, and attached by a ratchet and click to that wheel, or to clock frame, if there is no striking part. The weights are hung, as may be seen, the small one being only large enough to keep the rope or chain on the pulleys. If the part *b* of the rope or chain is pulled down, the ratchet-pulley runs under the click, and the great weight is pulled up by *c*, without taking its pressure off the going wheel at all.

Fig. 5678. Harrison's going barrel. Larger ratchet-wheel, to which the click R is attached, is connected with the great wheel G by a spring S, S'. While the clock is going the weight acts upon the great wheel G, through the spring; but as soon as the weight is taken off by winding, the click T, whose pivot is set in the frame, prevents the larger ratchet from falling back, and so the spring S, S', still drives the great wheel during the time the clock takes to wind, as it need only just keep the escapement going, the pendulum taking care of itself for that short time. Good watches have a substantially similar apparatus.

Fig. 5679. A very convenient construction of parallel ruler for drawing, made by cutting a quadrangle through the diagonal, forming two right-angle triangles, A and B. It is used by sliding the hypothenuse of one triangle upon that of the other.

Fig. 5680. Parallel ruler, consisting of a simple straight ruler B, with an attached axle C, and pair of wheels A, A. The wheels, which protrude but slightly through the under side of the ruler, have their edges nicked to take hold of the paper and keep the ruler always parallel with any lines drawn upon it.

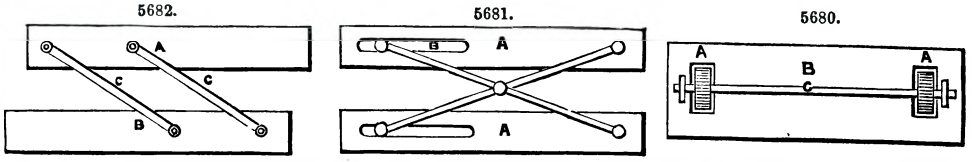

Fig. 5681. Compound parallel ruler, composed of two simple rulers A, A, connected by two crossed arms pivoted together at the middle of their length, each pivoted at one end to one of the rulers, and connected with the other one by a slot and sliding pin, as shown at B. In this the ends as well as the edges are kept parallel. The principle of construction of the several rulers represented is taken advantage of in the formation of some parts of machinery.

Fig. 5682. Parallel ruler composed of two simple rulers A, B, connected by two pivoted swinging arms C, C.

Fig. 5683. A simple means of guiding or obtaining a parallel motion of the piston-rod of an engine. The slide *a* moves in and is guided by the vertical slot in the frame, which is planed to a true surface.

Fig. 5684 differs from Fig. 5683 in having rollers substituted for the slides on the cross-head, said rollers working against straight guide-bars *a*, *a*, attached to the frame. This is used for small engines in France.

Fig. 5685. A parallel motion invented by Dr. Cartwright in the year 1787. The toothed wheels C, C, have equal diameters and numbers of teeth, and the cranks *a*, *a*, have equal radii, and are set in opposite directions, and consequently give an equal obliquity to the connecting rods during the revolution of the wheels. The cross-head on the piston-rod being attached to the two connecting rods, the piston-rod is caused to move in a right line.

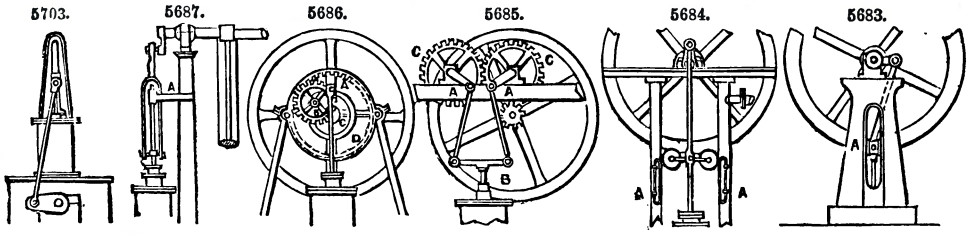

Fig. 5686. A piston-rod guide. The piston-rod A is connected with a wrist attached to a cog-wheel B, which turns on a crank-pin, carried by a plate C, which is fast on the shaft. The wheel B revolves around a stationary internally-toothed gear D, of double the diameter of B, and so motion is given to the crank-pin, and the piston-rod is kept upright.

Fig. 5687. The piston-rod is prolonged and works in a guide A, which is in line with the centre of the cylinder. The lower part of the connecting rod is forked to permit the upper part of the piston-rod to pass between.

Fig. 5688. An engine with crank-motion like that represented in Fig. 5490 and Fig. 5663, the crank-wrist journal working in a slotted cross-head A. This cross-head works between the pillar-guides D, D, of the engine framing.

Fig. 5689. A parallel motion used for the piston-rod of side-lever marine engines. F, C, is the radius bar, and E the cross-head to which the parallel bar E, D, is attached.

Fig. 5690. A parallel motion used only in particular cases.

Fig. 5691 shows a parallel motion used in some of the old single-acting beam-engines. The piston-rod is formed with a straight rack gearing with a toothed segment on the beam. The back of the rack works against a roller A.

Fig. 5692. A parallel motion commonly used for stationary beam-engines.

Fig. 5693. An arrangement of parallel motion for side-lever marine engines. The parallel rods connected with the side rods from the beams or side levers are also connected with short radius arms on a rack-shaft working in fixed bearings.

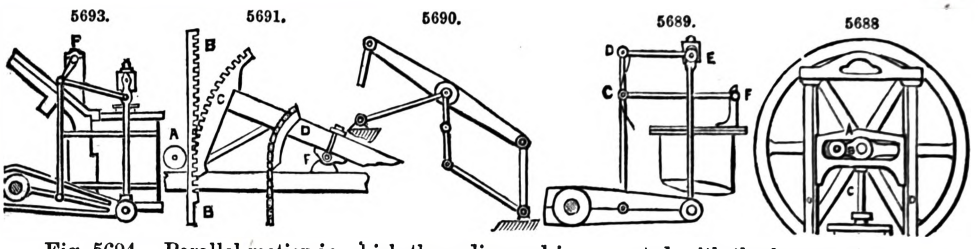

Fig. 5694. Parallel motion in which the radius rod is connected with the lower end of a short vibrating rod, the upper end of which is connected with the beam, and to the centre of which the piston-rod is connected.

Fig. 5695. Another modification, in which the radius bar is placed above the beam.

Fig. 5696. Parallel motion for direct-action engines. In this, the end of the bar B, C, is connected with the piston-rod, and the end B slides in a fixed slot D. The radius bar F, A, is connected at F with a fixed pivot, and at A midway between the ends of B, C.

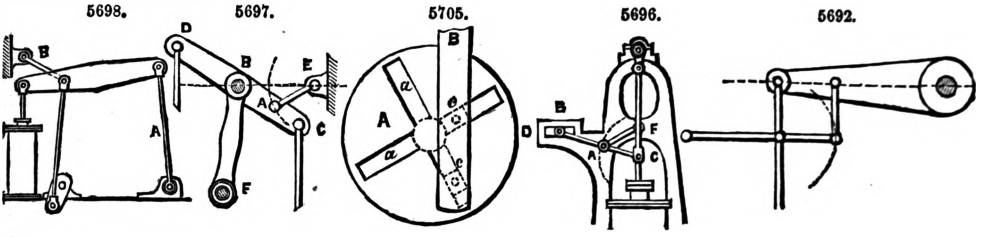

Fig. 5697. Another parallel motion. Beam D, C, with joggling pillar-support B, F, which vibrates from the centre F. The piston-rod is connected at C. The radius bar E, A, produces the parallel motion.

Fig. 5698. Grasshopper beam-engine. The beam is attached at one end to a rocking pillar A, and the shaft arranged as near to the cylinder as the crank will work. A is the radius bar of the parallel motion.

Fig. 5699. Old-fashioned single-acting beam pumping engine on the atmospheric principle, with chain connection between piston-rod and a segment at end of beam. The cylinder is open at top. Very low pressure steam is admitted below piston, and the weight of pump-rod and connections at the other end of beam helps to raise piston. Steam is then condensed by injection, and a vacuum thus produced below piston, which is then forced down by atmospheric pressure, thereby drawing up pump-rod.

Fig. 5700. Parallel motion for upright engine. A, A, are radius rods connected at one end with the framing, and at the other with a vibrating piece on top of piston-rod.

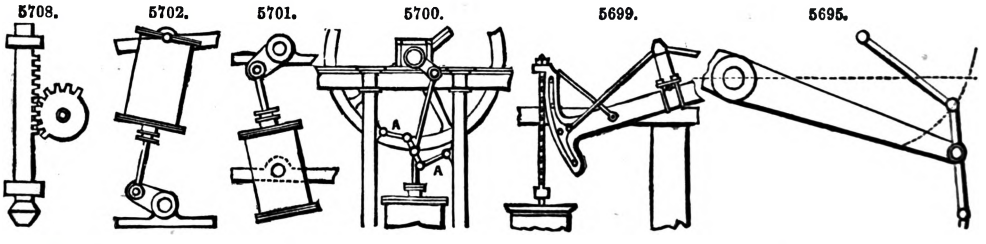

Fig. 5701. Oscillating engine. The cylinder has trunnions at the middle of its length working in fixed bearings, and the piston-rod is connected directly with the crank, and no guides are used.

Fig. 5702. Inverted oscillating or pendulum engine. The cylinder has trunnions at its upper end, and swings like a pendulum. The crank-shaft is below, and the piston-rod connected directly with crank.

Fig. 5703. Table-engine. The cylinder is fixed on a table-like base. The piston-rod has a cross-head working in straight slotted guides fixed on top of cylinder, and is connected by two side connecting rods with two parallel cranks on shaft under the table.

Fig. 5704. Section of disc-engine. Disc-piston, seen edgewise, has a motion substantially like a coin when it first falls after being spun in the air. The cylinder-heads are cones. The piston-rod is made with a ball to which the disc is attached, said ball working in concentric seats in cylinder-heads, and the left-hand end is attached to the crank-arm or fly-wheel on end of shaft at left. Steam is admitted alternately on either side of piston.

Fig. 5705. Mode of obtaining two reciprocating movements of a rod by one revolution of a shaft, patented in 1836 by B. F. Snyder, has been used for operating the needle of a sewing machine, by J. S. McCurday, also for driving a gang of saws. The disc A on the central rotating shaft has

two slots *a*, *a*, crossing each other at a right angle in the centre, and the connecting rod B has attached to it two pivoted slides *c*, *c*, one working in each slot.

Fig. 5706. Another form of parallel ruler. The arms are jointed in the middle and connected with an intermediate bar, by which means the ends of the ruler, as well as the sides, are kept parallel.

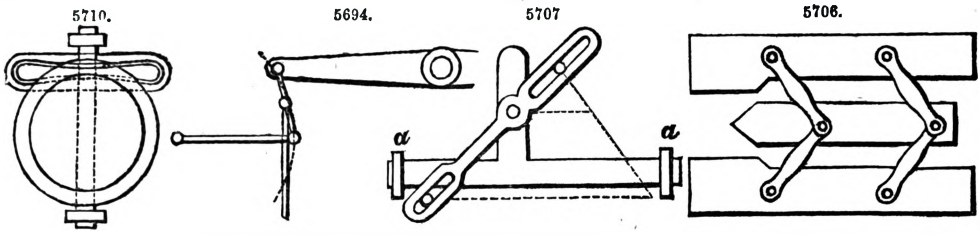

Fig. 5707. Traverse, or to-and-fro motion. The pin in the upper slot being stationary, and the one in the lower slot made to move in the direction of the horizontal dotted line, the lever will by its connection with the bar give to the latter a traversing motion in its guides *a*, *a*.

Fig. 5708. Stamp. Vertical percussive falls derived from horizontal rotating shaft. The mutilated tooth-pinion acts upon the rack to raise the rod until its teeth leave the rack and allow the rod to fall.

Fig. 5709. Another arrangement of the Chinese windlass, illustrated by Fig. 5535.

Fig. 5710. A modification of the crank and slotted cross-head, Fig. 5500. The cross-head contains an endless groove, in which the crank-wrist works, and which is formed to produce a uniform velocity of movement of the wrist or reciprocating rod.

Fig. 5711. The gyroscope, or rotascope, an instrument illustrating the tendency of rotating bodies to preserve their plane of rotation. The spindle of the metallic disc C is fitted to return easily in bearings in the ring A. If the disc is set in rapid rotary motion on its axis, and the pintle F at one side of the ring A is placed on the bearing in the top of the pillar G, the disc and ring seem indifferent to gravity, and instead of dropping begin to revolve about the vertical axis.

Fig. 5712. Bohnenberger's machine, illustrating the same tendency of rotating bodies. This consists of three rings, A, A^1, A^2, placed one within the other, and connected by pivots at right angles to each other. The smallest ring A^2 contains the bearings for the axis of a heavy ball B. The ball being set in rapid rotation, its axis will continue in the same direction, no matter how the position of the rings may be altered; and the ring A^2 which supports it will resist a considerable pressure tending to displace it.

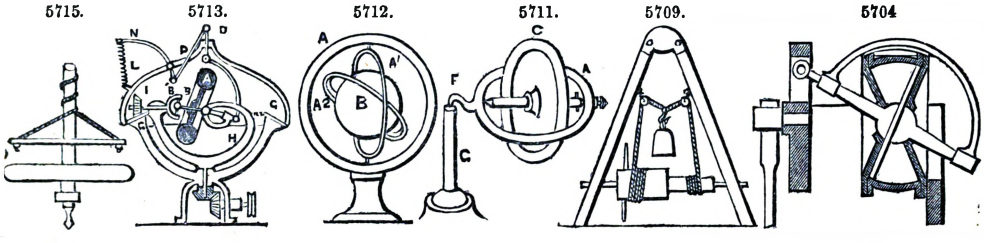

Fig. 5713. What is called the gyroscope governor, for steam-engines, introduced by Alban Anderson, in 1858. A is a heavy wheel, the axle B, B^1, of which is made in two pieces connected together by a universal joint. The wheel A is on one piece, B, and a pinion I on the other piece, B^1. The piece B is connected at its middle by a hinge-joint with the revolving frame H, so that variations in the inclination of the wheel A will cause the outer end of the piece B to rise and fall. The frame H is driven by bevel-gearing from the engine, and by that means the pinion I is carried round the stationary toothed circle G, and the wheel A is thus made to receive a rapid rotary motion on its axis. When the frame H and wheel A are in motion, the tendency of the wheel A is to assume a vertical position, but this tendency is opposed by a spring L. The greater velocity of the governor, the stronger is the tendency above mentioned, and the more it overcomes the force of the spring, and the reverse. The piece B is connected with the valve-rods by rods C, D, and the spring L is connected with the said rod by levers N and rod P.

Fig. 5714. Traverse of carriage, made variable by fusee, according to the variation in diameter where the band acts.

Fig. 5715. Primitive drilling apparatus. Being once set in motion, it is kept going by hand, by alternately pressing down and relieving the transverse bar to which the bands are attached, causing the bands to wind upon the spindle alternately in opposite directions, while the heavy disc or fly-wheel gives a steady momentum to the drill-spindle in its rotary motion.

Fig. 5716. Continuous rotary motion from oscillating. The beam being made to vibrate, the drum to which the cord is attached, working loose on fly-wheel shaft, gives motion to said shaft through the pawl and ratchet-wheel, the pawl being attached to drum and the ratchet-wheel fast on shaft.

Fig. 5717. Another simple form of clutch for pulleys, consisting of a pin on the lower shaft and a pin on side of pulley. The pulley is moved lengthwise of the shaft by means of a lever or other means, to bring its pin into or out of contact with the pin on shaft.

Fig. 5718. Alternating traverse of upper shaft and its drum, produced by pin on the end of the shaft working in oblique groove in the lower cylinder.

Fig. 5719. See-saw, one of the simplest illustrations of a limited oscillating or alternate circular motion.

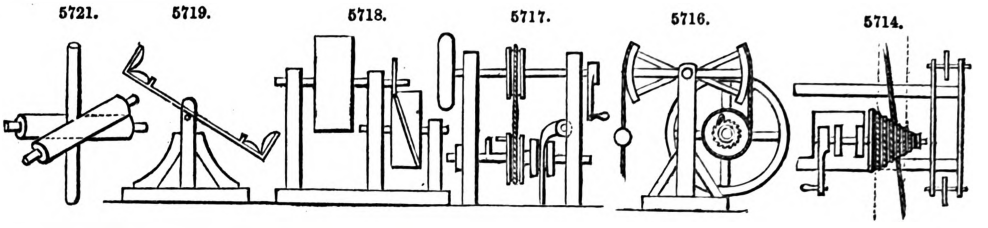

Fig. 5720. Intermittent rotary motion from continuous rotary motion about an axis at right angles. Small wheel on left is driver; and the friction-rollers on its radial studs work against the faces of oblique grooves or projections across the face of the larger wheel, and impart motion thereto.

Fig. 5721. Cylindrical rod arranged between two rollers, the axes of which are oblique to each other. The rotation of the rollers produces both a longitudinal and a rotary motion of the rod.

Fig. 5722. Drilling machine. By the large bevel-gear rotary motion is given to vertical drill shaft, which slides through small bevel-gear but is made to turn with it by a feather and groove, and is depressed by treadle connected with upper lever.

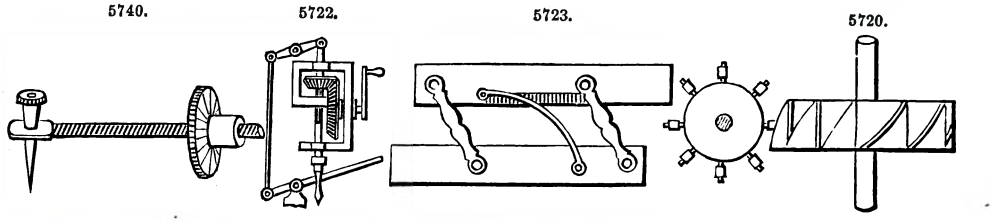

Fig. 5723. A parallel ruler with which lines may be drawn at required distances apart without setting out. Lower edge of upper blade has a graduated ivory scale, on which the incidence of the outer edge of the brass arc indicates the width between the blades.

Fig. 5724. Describing spiral line on a cylinder. The spur-gear which drives the bevel-gears, and thus gives rotary motion to the cylinder, also gears into the toothed rack, and thereby causes the marking point to traverse from end to end of the cylinder.

Fig. 5725. Cycloidal surfaces, causing pendulum to move in cycloidal curve, rendering oscillations isochronous, or equal-timed.

Fig. 5726. Motion for polishing mirrors, the rubbing of which should be varied as much as practicable. The handle turns the crank to which the long bar and attached ratchet-wheel are connected. The mirror is secured rigidly to the ratchet-wheel. The long bar, which is guided by pins in the lower rail, has both a longitudinal and an oscillating movement, and the ratchet-wheel is caused to rotate intermittently by a click operated by an eccentric on the crank-shaft, and hence the mirror has a compound movement.

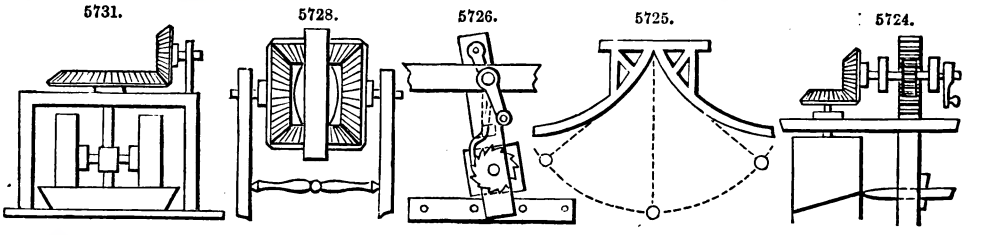

Fig. 5727. Modification of mangle-wheel motion. The large wheel is toothed on both faces, and an alternating circular motion is produced by the uniform revolution of the pinion, which passes from one side of the wheel to the other through an opening on the left of the figure.

Fig. 5728. White's dynamometer for determining the amount of power required to give rotary motion to any piece of mechanism. The two horizontal bevel-gears are arranged in a hoop-shaped frame, which revolves freely on the middle of the horizontal shaft, on which there are two vertical bevel-gears gearing to the horizontal ones, one fast and the other loose on the shaft. Suppose the hoop to be held stationary, motion given to either vertical bevel-gear will be imparted through the horizontal gears to the other vertical one; but if the hoop be permitted it will revolve with the vertical gear put in motion, and the amount of power required to hold it stationary will correspond with that transmitted from the first gear, and a band attached to its periphery will indicate that power by the weight required to keep it still.

Fig. 5729. Robert's contrivance for proving that friction of a wheel carriage does not increase with velocity, but only with load. Loaded wagon is supported on surface of large wheel, and connected with indicator constructed with spiral spring, to show force required to keep carriage

stationary when large wheel is put in motion. It was found that difference in velocity produced no variation in the indicator, but difference in weight immediately did so.

Fig. 5730. Rotary motion of shaft from treadle by means of an endless band running from a roller on the treadle to an eccentric on the shaft.

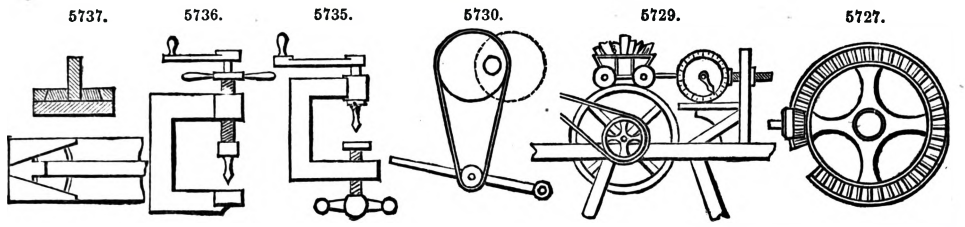

Fig. 5731. Pair of edge runners or chasers for crushing or grinding. The axles are connected with vertical shaft, and the wheels or chasers run in an annular pan or trough.

Fig. 5732. Tread-wheel horse-power turned by the weight of an animal attempting to walk up one side of its interior; has been used for driving the paddle-wheels of ferry-boats and other purposes by horses. The turn-spit dog used also to be employed in such a wheel in ancient times for turning meat while roasting on a spit.

Fig. 5733. The treadmill employed in jails in some countries for exercising criminals condemned to labour, and employed in grinding grain; turns by weight of persons stepping on tread-boards on periphery. This is supposed to be a Chinese invention, and it is still used in China for raising water for irrigation.

Fig. 5734. Saw for cutting trees by motion of pendulum, is represented as cutting a lying tree.

Figs. 5735, 5736. Portable cramp drills. In Fig. 5735 the feed-screw is opposite the drill, and in Fig. 5736 the drill-spindle passes through the centre of the feed-screw.

Fig. 5737. Bowery's joiner's clamp, plan and transverse section. Oblong bed has, at one end, two wedge-formed cheeks, adjacent sides of which lie at an angle to each other, and are dovetailed inward from upper edge to receive two wedges for clamping the piece or pieces of wood to be planed.

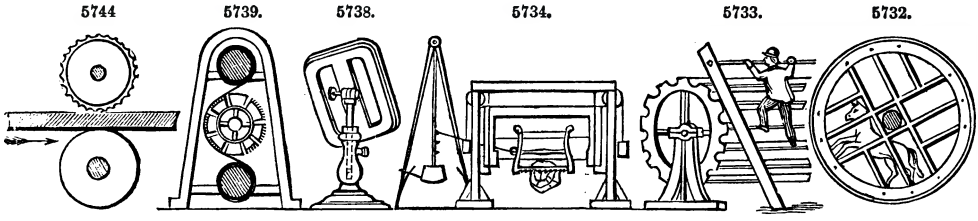

Fig. 5738. Adjustable stand for mirrors, by which a glass or other article can be raised or lowered, turned to the right or left, and varied in its inclination. The stem is fitted into a socket of pillar, and secured by a set screw, and the glass is hinged to the stem, and a set screw is applied to the hinge to tighten it. The same thing is used for photographic camera-stands.

Fig. 5739 represents the principal elements of machinery for dressing cloth and warps, consisting of two rollers, from one to the other of which the yarn or cloth is wound, and an interposed cylinder having its periphery either smooth-surfaced or armed with brushes, teasels, or other contrivances, according to the nature of the work to be done. These elements are used in machines for sizing warps, gig-mills for dressing woollen goods, and in most machines for finishing woven fabrics.

Fig. 5740. Helicograph, or instrument for describing helices. The small wheel, by revolving about the fixed central point, describes a volute or spiral by moving along the screw-threaded axle either way, and transmits the same to drawing paper on which transfer paper is laid with coloured side downward.

Fig. 5741. Contrivance employed in Russia for shutting doors. One pin is fitted to and turns in socket attached to door, and the other is similarly attached to frame. In opening the door, pins are brought together, and weight is raised. Weight closes door by depressing the joint of the toggle towards a straight line, and so widening the space between the pins.

Fig. 5742. Folding library ladder. It is shown open, partly open, and closed; the rounds are pivoted to the side-pieces, which are fitted together to form a round pole when closed, the rounds shutting up inside.

Fig. 5743. Self-adjusting step-ladder for wharfs at which there are rise and fall of tide. The steps are pivoted at one edge into wooden bars forming string-pieces, and their other edge is supported by rods suspended from bars forming hand-rails. The steps remain horizontal whatever position the ladder assumes.

Fig. 5744. Feed-motion of Woodworth's planing machine, a smooth supporting roller, and a toothed top roller.

Fig. 5745. Lifting jack operated by an eccentric, pawl, and ratchet. The upper pawl is a stop.

Fig. 5746. Device for converting oscillating into rotary motion. The semicircular piece A is attached to a lever which works on a fulcrum *a*, and it has attached to it the ends of two bands C and D, which run around two pulleys, loose on the shaft of the fly-wheel B. Band C is open, and band D crossed. The pulleys have attached to them pawls which engage with two ratchet-

wheels fast on the fly-wheel shaft. One pawl acts on its ratchet-wheel when the piece A turns one way, and the other when the said piece turns the other way, and thus a continuous rotary motion of the shaft is obtained.

Fig. 5747. Reciprocating into rotary motion. The weighted racks *a*, *a'*, are pivoted to the end of a piston-rod, and pins at the end of the said racks work in fixed guide-grooves *b*, *b*, in such manner that one rack operates upon the cog-wheel in ascending and the other in descending, and so continuous rotary motion is produced. The elbow-lever *c* and spring *d* are for carrying the pin of the right-hand rack over the upper angle in its guide-groove *b*.

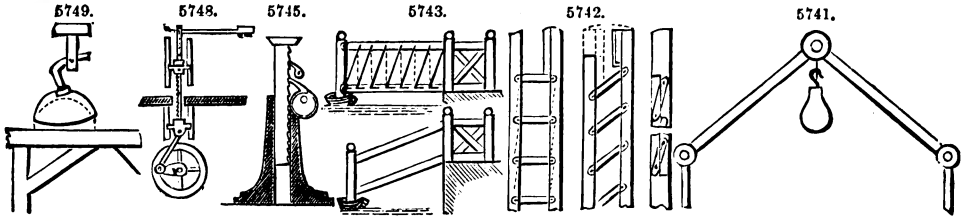

Fig. 5748. Gig-saw, the lower end connected with a crank which works it, and the upper end connected with a spring which keeps it strained without a gate.

Fig. 5749. Contrivance for polishing lenses and bodies of spherical form. The polishing material is in a cup connected by a ball-and-socket joint and bent piece of metal, with a rotating upright shaft set concentric to the body to be polished. The cup is set eccentric, and by that means is caused to have an independent rotary motion about its axis on the universal joint, as well as to revolve about the common axis of the shaft and the body to be polished. This prevents the parts of the surface of the cup from coming repeatedly in contact with the same parts of surface of the lens or other body.

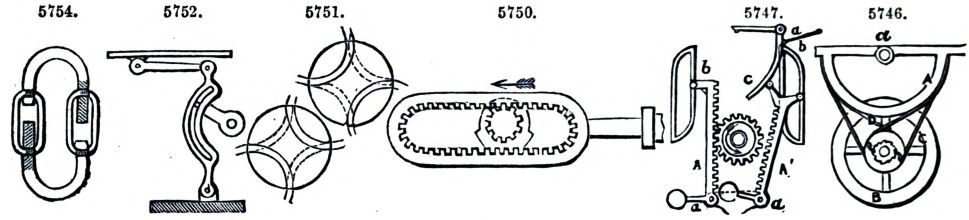

Fig. 5750. C. Parsons's device for converting reciprocating motion into rotary, an endless rack provided with grooves on its side gearing with a pinion having two concentric flanges of different diameters. A substitute for crank in oscillating cylinder engines.

Fig. 5751. Four-way cock, used many years ago on steam-engines to admit and exhaust steam from the cylinder. The two positions represented are produced by a quarter turn of the plug. Supposing the steam to enter at the top, in the upper figure the exhaust is from the right end of the cylinder, and in the lower figure the exhaust is from the left—the steam entering, of course, in the opposite port.

Fig. 5752. Continuous circular into intermittent rectilinear reciprocating. A motion used on several sewing machines for driving the shuttle. Same motion applied to three-revolution cylinder printing-presses.

Fig. 5753. Continuous circular motion into intermittent circular—the cam C being the driver.

Fig. 5754. A method of repairing chains, or tightening chains used as guys or braces. Link is made in two parts, one end of each is provided with swivel-nut, and other end with screw; the screw of each part fits into nut of other.

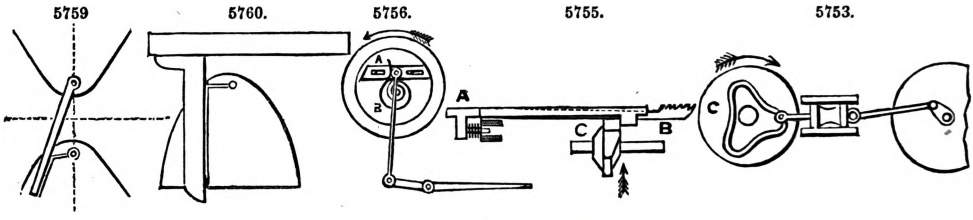

Fig. 5755. A. B. Wilson's four-motion feed, used in Wheeler and Wilson's, Sloat's, and other sewing machines. The bar A is forked, and has a second bar B, carrying the spur or feeder, pivoted in the said fork. The bar B is lifted by a radial projection on the cam C, at the same time the two bars are carried forward. A spring produces the return stroke, and the bar B drops of its own gravity.

Fig. 5756. E. P. Brownell's crank-motion to obviate dead-centres. The pressure on the treadle causes the slotted slide A to move forward with the wrist until the latter has passed the centre, when the spring B forces the slide against the stops until it is again required to move forward.

Fig. 5757. Cyclograph for describing circular arcs in drawings where the centre is inaccessible. This is composed of three straight rules. The chord and versed sine being laid down, draw straight sloping line, from ends of former to top of latter; and to these lines lay two of the rules crossing at the apex. Fasten these rules together, and another rule across them to serve as a brace, and insert a pin or point at each end of chord to guide the apparatus, which, on being moved against these points, will describe the arc by means of pencil in the angle of the crossing edges of the sloping rules.

Fig. 5758. Another cyclograph. The elastic arched bar is made half the depth at the ends that it is at the middle, and is formed so that its outer edge coincides with a true circular arc when bent to its greatest extent. Three points in the required arc being given, the bar is bent to them by means of the screw, each end being confined to the straight bar by means of a small roller.

Fig. 5759. Mechanical means of describing hyperbolas, their foci and vertices being given. Suppose the curves two opposite hyperbolas, the points in vertical dotted centre line their foci. One end of thread being looped on pin inserted at the other focus, and other end held to other end of rule, with just enough slack between to permit height to reach vortex when rule coincides with centre line. A pencil held in bight, and kept close to rule, while latter is moved from centre line, describes one-half of parabola; the rule is then reversed for the other half.

Fig. 5760. Mechanical means of describing parabolas, the base, altitude, focus, and directrix being given. Lay straight edge with near side coinciding with directrix, and square with stock against the same, so that the blade is parallel with the axis, and proceed with pencil in bight of thread, as in the preceding.

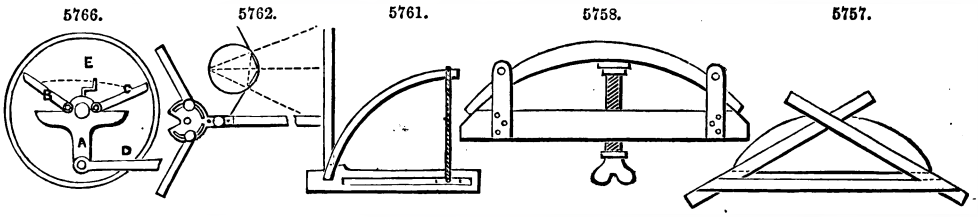

Fig. 5761. Instrument for describing pointed arches. Horizontal bar is slotted and fitted with a slide having pin for loop of cord. Arch bar of elastic wood is fixed in horizontal at right angles. Horizontal bar is placed with upper edge on springing line, and back of arch bar ranging with jamb of opening, and the latter bar is bent till the upper side meets apex of arch, fulcrum-piece at its base ensuring its retaining tangential relation to jamb; the pencil is secured to arched bar at its connection with cord.

Fig. 5762. Centrolinead for drawing lines toward an inaccessible or inconveniently distant point; chiefly used in perspective. Upper or drawing edge of blade and back of movable legs should intersect centre of joint. Geometrical diagram indicates mode of setting instruments, legs forming it may form unequal angles with blade. At either end of dotted line crossing central, a pin is inserted vertically for instrument to work against. Supposing it to be inconvenient to produce the convergent lines until they intersect, even temporarily, for the purpose of setting the instrument as shown, a corresponding convergence may be found between them by drawing a line parallel to and inward from each.

Fig. 5763. Proportional compasses used in copying drawings on a given larger or smaller scale. The pivot of compasses is secured in a slide which is adjustable in the longitudinal slots of legs, and capable of being secured by a set screw; the dimensions are taken between one pair of points and transferred with the other pair, and thus enlarged or diminished in proportion to the relative distances of the points from the pivot. A scale is provided on one or both legs to indicate the proportion.

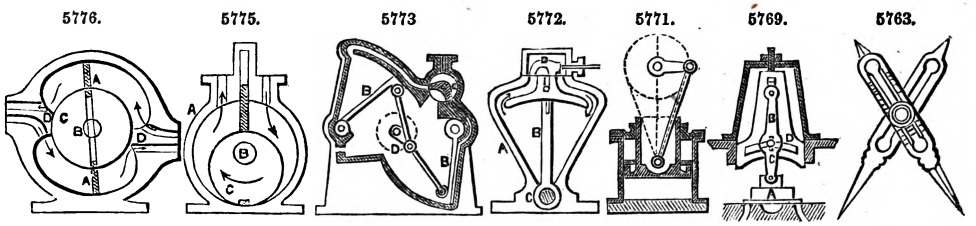

Fig. 5764. Bisecting gauge. Of two parallel cheeks on the cross-bar one is fixed and the other adjustable, and held by thumb-screw. In either cheek is entered one of two short bars of equal length, united by a pivot, having a sharp point for marking. This point is always in a central position between the cheeks, whatever their distance apart, so that any parallel-sided solid to which the cheeks are adjusted may be bisected from end to end by drawing the gauge along it. Solids not parallel-sided may be bisected in like manner, by leaving one cheek loose, but keeping it in contact with solid.

Fig. 5765. Self-recording level for surveyors, consists of a carriage, the shape of which is governed by an isosceles triangle, having horizontal base. The circumference of each wheel equals the base of the triangle. A pendulum, when the instrument is on level ground, bisects the base; and when on an inclination, gravitates to right or left from centre accordingly. A drum, rotated by gearing from one of the carriage wheels, carries sectionally ruled paper, upon which pencil on

pendulum traces profile corresponding with that of ground travelled over. The drum can be shifted vertically to accord with any given scale; and horizontally, to avoid removal of filled paper.

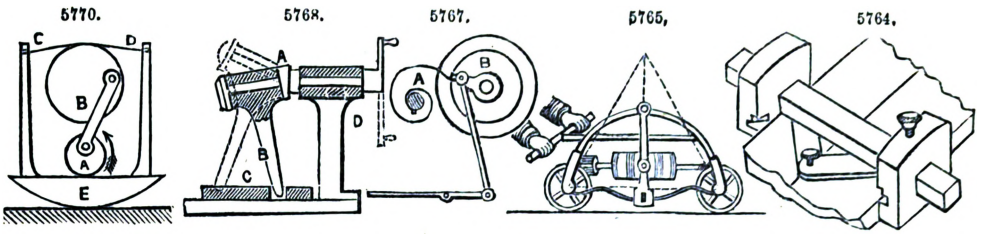

Fig. 5766. P. Dickson's device for converting an oscillating motion into intermittent circular, in either direction. Oscillating motion communicated to lever A, which is provided with two pawls B and C, hinged to its upper side, near shaft of wheel D. Small crank E on upper side of lever A is attached by cord to each of pawls, so that when pawl C is let into contact with interior of rim of wheel D, it moves in one direction, and pawl B is out of gear. Motion of wheel D may be reversed by lifting pawl C, which was in gear, and letting opposite one into gear by crank E.

Fig. 5767. A device for assisting the crank of a treadle motion over the dead-centres. The helical spring A has a tendency to move the crank B in direction at right angles to dead-centres.

Fig. 5768. Continuous circular motion into a rectilinear reciprocating. The shaft A, working in a fixed bearing D, is bent on one end, and fitted to turn in a socket at the upper end of a rod B, the lower end of which works in a socket in the slide C. Dotted lines show the position of the rod B and slide, when the shaft has made half a revolution from the position shown in bold lines.

Fig. 5769. Buchanan and Righter's slide-valve motion. Valve A is attached to lower end of rod B, and free to slide horizontally on valve-seat. Upper end of rod B is attached to a pin, which slides in vertical slots, and a roller C, attached to the said rod, slides in two suspended and vertically adjustable arcs D. This arrangement is intended to prevent the valve from being pressed with too great force against its seat by the pressure of steam, and to relieve it of friction.

Fig. 5770. Continuous circular motion converted into a rocking motion. Used in self-rocking cradles. Wheel A revolves and is connected to a wheel B, of greater radius, which receives an oscillating motion, and wheel B is provided with two flexible bands C, D, which connect each to a standard or post, attached to the rocker E of the cradle.

Fig. 5771. Trunk-engine used for marine purposes. The piston has attached to it a trunk, at the lower end of which the pitman is connected directly with the piston. The trunk works through a stuffing box in cylinder-head. The effective area of the upper side of the piston is greatly reduced by the trunk. To equalize the power on both sides of piston, high-pressure steam has been first used on the upper side, and afterward exhausted into and used expansively in the part of cylinder below.

Fig. 5772. Oscillating piston engine. The profile of the cylinder A is of the form of a sector. The piston B is attached to a rock-shaft C, and steam is admitted to the cylinder to operate on one and the other side of piston alternately, by means of a slide-valve D, substantially like that of an ordinary reciprocating engine. The rock-shaft is connected with a crank to produce rotary motion.

Fig. 5773. Root's double-quadrant engine. This is on the same principle as Fig. 5772; but two single-acting pistons B, B, are used, and both connected with one crank D. The steam is admitted to act on the outer sides of the two pistons alternately by means of one induction-valve *a*, and is exhausted through the space between the pistons. The piston and crank connections are such that the steam acts on each piston during about two-thirds of the revolution of the crank, and hence there are no dead-points.

Fig. 5774. Root's double-reciprocating or square piston engine. The cylinder A of this engine is of oblong square form, and contains two pistons B and C, the former working horizontally, and the latter working vertically within it. The piston C is connected with the wrist *a* of the crank on the main shaft *b*. The ports for the admission of steam are shown black. The two pistons produce the rotation of the crank without dead-points.

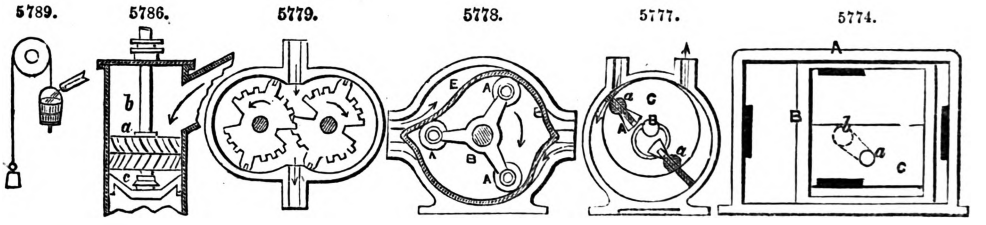

Fig. 5775. One of the many forms of rotary engine. A is the cylinder having the shaft B pass centrally through it. The piston C is simply an eccentric fast on the shaft, and working in contact with the cylinder at one point. The induction and eduction of steam take place as indicated by arrows, and the pressure of the steam on one side of the piston produces its rotation and that of the shaft. The sliding abutment D, between the induction and eduction ports, moves out of the way of the piston to let it pass.

Fig. 5776. Another form of rotary engine, in which there are two stationary abutments D, D, within the cylinder; and the two pistons A, A, in order to enable them to pass the abutments, are

made to slide radially in grooves in the hub C of the main shaft B. The steam acts on both pistons at once, to produce the rotation of the hub and shaft. The induction and eduction are indicated by arrows.

Fig. 5777. Another rotary engine, in which the shaft B works in fixed bearings, eccentric to the cylinder. The pistons A, A, are fitted to slide in and out from grooves in the hub C, which is concentric with the shaft, but they are always radial to the cylinder, being kept so by rings (shown dotted), fitting to hubs on the cylinder-heads. The pistons slide through rolling packings A, A, in the hub C.

Fig. 5778. The india-rubber rotary engine, in which the cylinder has a flexible lining E of india-rubber, and rollers A, A, are substituted for pistons, said rollers being attached to arms radiating from the main shaft B. The steam acting between the india-rubber and the surrounding rigid portion of the cylinder presses the india-rubber against the rollers, and causes them to revolve around the cylinder and turn the shaft.

Fig. 5779. Holly's double-elliptical rotary engine. The two elliptical pistons geared together are operated upon by the steam entering between them in such manner as to produce their rotary motion in opposite directions.

These rotary engines can all be converted into pumps.

Fig. 5780. Overshot water-wheel.

Fig. 5781. Undershot water-wheel.

Fig. 5782. Breast-wheel. This holds intermediate place between overshot and undershot wheels; has float-boards like the former, but the cavities between are converted into buckets by moving in a channel adapted to circumference and width, and into which water enters nearly at the level of axle.

Fig. 5783. Horizontal overshot water-wheel.

Fig. 5784. A plan view of the Fourneyron turbine water-wheel. In the centre are a number of fixed curved shutes or guides A, which direct the water against the buckets of the outer wheel B, which revolves, and the water discharges at the circumference.

Fig. 5785. Warren's central discharge turbine, plan view. The guides *a* are outside, and the wheel *b* revolves within them, discharging the water at the centre.

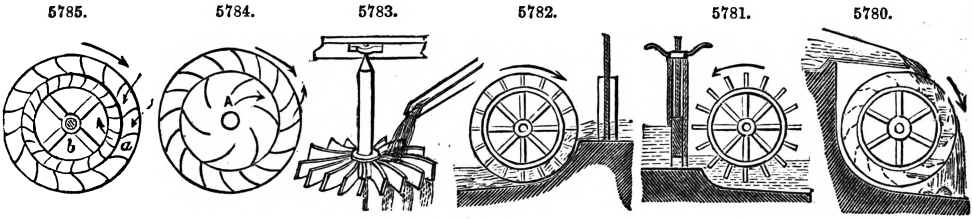

Fig. 5786. Jonval turbine. The shutes are arranged on the outside of a drum, radial to a common centre, and stationary within the trunk or casing *b*. The wheel *c* is made in nearly the same way; the buckets exceed in number those of the shutes, and are set at a slight tangent instead of radially, and the curve generally used is that of the cycloid or parabola.

Fig. 5787. Volute wheel, having radial vanes *a*, against which the water impinges and carries the wheel around. The scroll or volute casing *b* confines the water in such a manner that it acts against the vanes all around the wheel. By the addition of the inclined buckets *c*, *c*, at the bottom, the water is made to act with additional force as it escapes through the openings of said buckets.

Fig. 5788. Barker, or reaction mill. Rotary motion of central hollow shaft is obtained by the reaction of the water escaping at the ends of its arms, the rotation being in a direction the reverse of the escape.

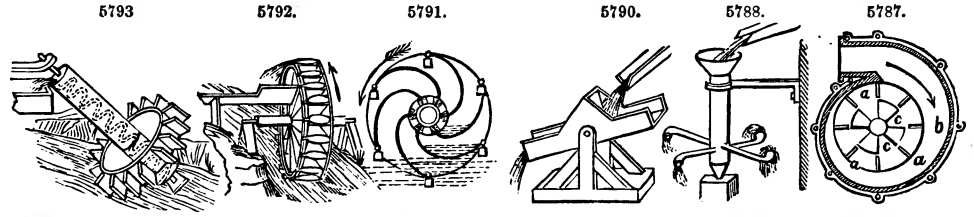

Fig. 5789. A method of obtaining a reciprocating motion from a continuous fall of water, by means of a valve in the bottom of the bucket which opens by striking the ground, and thereby emptying the bucket, which is caused to rise again by the action of a counterweight on the other side of the pulley over which it is suspended.

Fig. 5790 represents a trough divided transversely into equal parts, and supported on an axis by a frame beneath. The fall of water filling one side of the division, the trough is vibrated on its axis, and at the same time that it delivers the water the opposite side is brought under the stream and filled, which in like manner produces the vibration of the trough back again. This has been used as a water meter.

Fig. 5791. Persian wheel, used in Eastern countries for irrigation. It has a hollow shaft and curved floats, at the extremities of which are suspended buckets or tubs. The wheel is partly

immersed in a stream acting on the convex surface of its floats; and as it is thus caused to revolve, a quantity of water will be elevated by each float at each revolution, and conducted to the hollow shaft at the same time that one of the buckets carries its fill of water to a higher level, where it is emptied by coming in contact with a stationary pin placed in a convenient position for tilting it.

Fig. 5792. Machine of ancient origin, still employed on the river Eisach, in the Tyrol, for raising water. A current keeping the wheel in motion, the pots on its periphery are successively immersed, filled, and emptied into a trough above the stream.

Fig. 5793. Application of Archimedes' screw to raising water, the supply stream being the motive power. The oblique shaft of the wheel has extending through it a spiral passage, the lower end of which is immersed in water, and the stream, acting upon the wheel at its lower end, produces its revolution, by which the water is conveyed upward continuously through the spiral passage and discharged at the top.

Fig. 5794. Montgolfier's hydraulic ram. Small fall of water made to throw a jet to a great height or furnish a supply at high level. The right-hand valve being kept open by a weight or spring, the current flowing through the pipe in the direction of the arrow escapes thereby till its pressure, overcoming the resistance of weight or spring, closes it. On the closing of this valve the momentum of the current overcomes the pressure on the other valve, opens it, and throws a quantity of water into the globular air-chamber by the expansive force of the air in which the upward stream from the nozzle is maintained. On equilibrium taking place, the right-hand valve opens and left-hand one shuts. Thus, by the alternate action of the valves, a quantity of water is raised into the air-chamber at every stroke, and the elasticity of the air gives uniformity to the efflux.

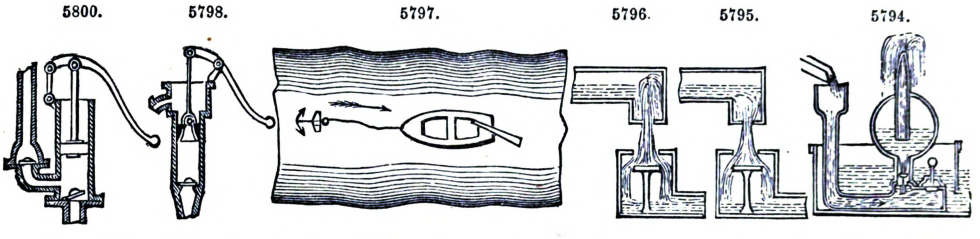

Figs. 5795, 5796. D'Ectol's oscillating column, for elevating a portion of a given fall of water above the level of the reservoir or head, by means of a machine, all the parts of which are absolutely fixed. It consists of an upper and smaller tube, which is constantly supplied with water, and a lower and larger tube, provided with a circular plate below concentric with the orifice which receives the stream from the tube above. Upon allowing the water to descend, as shown in Fig. 5795, it forms itself gradually into a cone on the circular plate, as shown in Fig. 5796, which cone protrudes into the smaller tube so as to check the flow of water downward; and the regular supply continuing from above, the column in the upper tube rises until the cone on the circular plate gives way. This action is renewed periodically, and is regulated by the supply of water.

Fig. 5797. This method of passing a boat from one shore of a river to the other is common on the Rhine and elsewhere, and is effected by the action of the stream on the rudder, which carries the boat across the stream in the arc of a circle, the centre of which is the anchor which holds the boat from floating down the stream.

Fig. 5798. Common lift-pump. In the up-stroke of piston or bucket the lower valve opens and the valve in piston shuts; air is exhausted out of suction-pipe, and water rushes up to fill the vacuum. In down-stroke lower valve is shut and valve in piston opens, and the water simply passes through the piston. The water above piston is lifted up, and runs over out of spout at each up-stroke. This pump cannot raise water over 30 ft. high.

Fig. 5799. Modern lifting pump. This pump operates in same manner as one in previous figure, except that piston-rod passes through stuffing box, and outlet is closed by a flap-valve opening upward. Water can be lifted to any height above this pump.

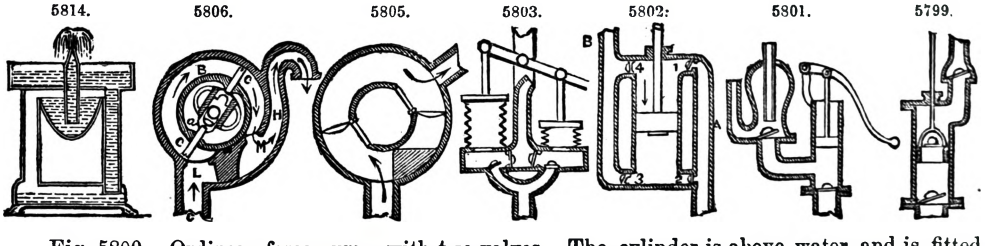

Fig. 5800. Ordinary force-pump, with two valves. The cylinder is above water, and is fitted with solid piston; one valve closes outlet-pipe, and other closes suction-pipe. When piston is rising suction-valve is open, and water rushes into cylinder, outlet-valve being closed. On descent of piston suction-valve closes, and water is forced up through outlet-valve to any distance or elevation.

Fig. 5801. Force-pump, same as above, with addition of air-chamber to the outlet, to produce a constant flow. The outlet from air-chamber is shown at two places, from either of which water may be taken. The air is compressed by the water during the downward stroke of the piston, and expands and presses out the water from the chamber during the up-stroke.

Fig. 5802. Double-acting pump. Cylinder closed at each end, and piston-rod passes through

stuffing box on one end, and the cylinder has four openings covered by valves, two for admitting water and like number for discharge. A is suction-pipe, and B discharge-pipe. When piston moves down, water rushes in at suction-valve 1, on upper end of cylinder, and that below piston is forced through valve 3 and discharge-pipe B; on the piston ascending again, water is forced through discharge-valve 4, on upper end of cylinder, and water enters lower suction-valve 2.

Fig. 5803. Double lantern-bellows pump. As one bellows is distended by lever, air is rarefied within it, and water passes up suction-pipe to fill space; at same time other bellows is compressed, and expels its contents through discharge-pipe; valves working the same as in the ordinary force-pump.

Fig. 5804. Diaphragm forcing pump. A flexible diaphragm is employed instead of bellows, and valves are arranged same as in preceding.

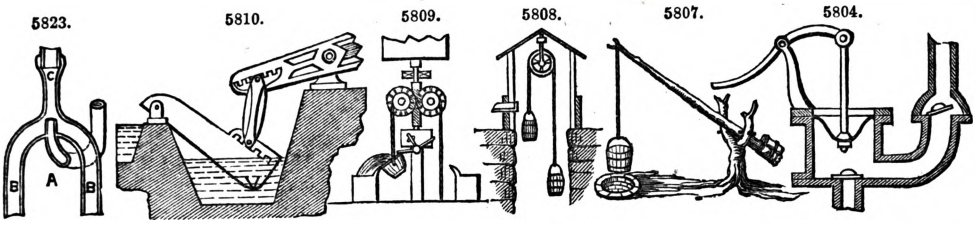

Fig. 5805. Old rotary pump. Lower aperture entrance for water, and upper for exit. Central part revolves with its valves, which fit accurately to inner surface of outer cylinder. The projection shown in lower side of cylinder is an abutment to close the valves when they reach that point.

Fig. 5806. Cary's rotary pump. Within the fixed cylinder there is placed a revolving drum B, attached to an axle A. Heart-shaped cam A, surrounding axle, is also fixed. Revolution of drum causes sliding pistons *c*, *c*, to move in and out, in obedience to form of cam. Water enters and is removed from the chamber through ports L and M; the directions are indicated by arrows. Cam is so placed that each piston is, in succession, forced back to its seat when opposite E, and at same time other piston is forced fully against inner side of chamber, thus driving before it water already there into exit-pipe H, and drawing after it, through suction-pipe F, the stream of supply.

Fig. 5807. Common mode of raising water from wells of inconsiderable depth. Counterbalance equals about one-half of weight to be raised, so that the bucket has to be pulled down when empty, and is assisted in elevating it when full by counterbalance.

Fig. 5808. The common pulley and buckets for raising water; the empty bucket is pulled down to raise the full one.

Fig. 5809. Reciprocating lift for wells. Top part represents horizontal wind-wheel on a shaft which carries spiral thread. Coupling of latter allows small vibration, that it may act on one worm-wheel at a time. Behind worm-wheels are pulleys, over which passes rope which carries bucket at each extremity. In centre is vibrating tappet, against which bucket strikes in its ascent, and which, by means of arm in step wherein spiral and shaft are supported, traverses spiral from one wheel to other, so that the bucket which has delivered water is lowered and other one raised.

Fig. 5810. Fairbairn's bailing scoop, for elevating water short distances. The scoop is connected by pitman to end of a lever or of a beam of single-acting engine. Distance of lift may be altered by placing end of rod in notches shown in figure.

Fig. 5811. Pendulums or swinging gutters for raising water by their pendulous motions. Terminations at bottom are scoops, and at top open pipes; intermediate angles are formed with boxes and flap-valve, each connected with two branches of pipe.

Fig. 5812. Chain pumps; lifting water by continuous circular motion. Wood or metal discs, carried by endless chain, are adapted to water-tight cylinder, and form with it a succession of buckets filled with water. Power is applied at upper wheel.

Fig. 5813. Self-acting weir and scouring sluice. Two leaves turn on pivots below centres; upper leaf much larger than lower, and turns in direction of stream, while lower turns against it. Top edge of lower leaf overlaps bottom edge of upper one, and is forced against it by pressure of water. In ordinary states of stream, counteracting pressures keep weir vertical and closed, as in the left-hand figure, and water flows through notch in upper leaf; but on water rising above ordinary level, pressure above from greater surface and leverage overcomes resistance below, upper leaf turns over, pushing back lower, reducing obstructions, and opening at bed a passage to deposit.

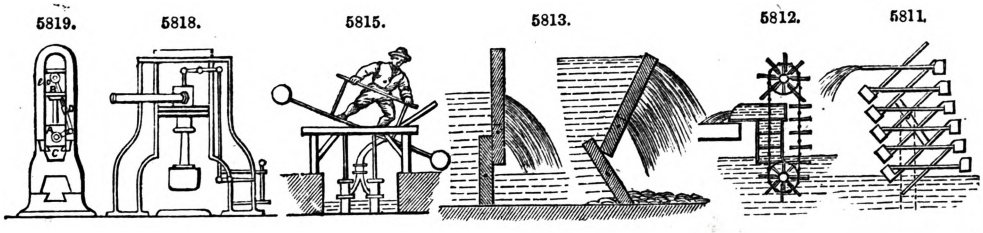

Fig. 5814. Hiero's fountain. Water being poured into upper vessel descends tube on right into lower; intermediate vessel being also filled and more water poured into upper, confined air in cavities over water in lower and intermediate vessels, and in communication tube on left, being compressed, drives by its elastic force a jet up central tube.

Fig. 5815. Balance pumps. Pair worked reciprocally by a person pressing alternately on opposite ends of lever or beam.

Fig. 5816. Flexible water-main, plan and section. Two pipes of 15 in. and 18 in. interior diameter, having some of their joints thus formed, conduct water across the Clyde to Glasgow Water-works. Pipes are secured to strong log frames, having hinges with horizontal pivots. Frames and pipes were put together on south side of the river, and, the north end of pipe being plugged, they were hauled across by machinery on north side, their flexible structure enabling them to follow the bed.

Fig. 5817. French invention for obtaining rotary motion from different temperatures in two bodies of water. Two cisterns contain water; that in left at natural temperature, and that in right higher. In right is a water-wheel geared with Archimedean screw in left. From spiral screw of the latter a pipe extends over and passes to the under side of wheel. Machine is started by turning screw in opposite direction to that for raising water, thus forcing down air, which ascends in tube, crosses and descends, and imparts motion to wheel; and its volume increasing with change of temperature, it is said, keeps the machine in motion. We are not informed how the difference of temperature is to be maintained.

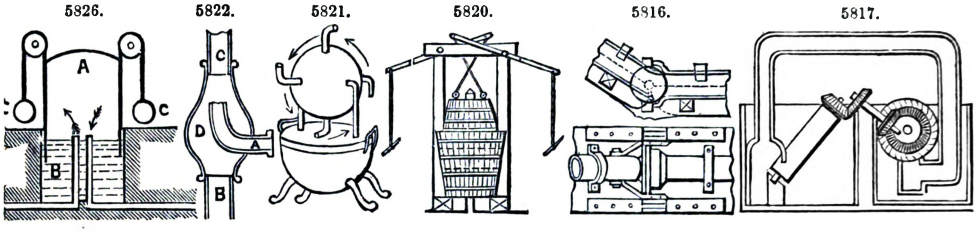

Fig. 5818. Steam-hammer. Cylinder fixed above and hammer attached to lower end of piston-rod. Steam being alternately admitted below piston and allowed to escape, raises and lets fall the hammer.

Fig. 5819. Hotchkiss's atmospheric hammer; derives the force of its blow from compressed air. Hammer-head C is attached to a piston fitted to a cylinder B, which is connected by a rod D with a crank A on the rotary driving shaft. As the cylinder ascends, air entering hole *e* is compressed below piston and lifts hammer. As cylinder descends, air entering hole *e* is compressed above, and is stored up to produce the blow by its instant expansion after the crank and connecting rod turn bottom centre.

Fig. 5820. Air-pump of simple construction. Smaller tube inverted in larger one. The latter contains water to upper dotted line, and the pipe from shaft or space to be exhausted passes through it to a few inches above water, terminating with valve opening upward. Upper tube has short pipe and upwardly-opening valve at top, and is suspended by ropes from levers. When upper tube descends, great part of air within is expelled through upper valve, so that, when afterward raised, rarefaction within causes gas or air to ascend through the lower valve. This pump was successfully used for drawing off carbonic acid from a large and deep shaft.

Fig. 5821. Aeolipile, or Hero's steam toy, described by Hero of Alexandria, 130 years B.C., and now regarded as the first steam-engine, the rotary form of which it may be considered to represent. From the lower vessel, or boiler, rise two pipes conducting steam to globular vessel above, and forming pivots on which the said vessel is caused to revolve in the direction of arrows, by the escape of steam through a number of bent arms. This works on the same principle as Barker's mill.

Fig. 5822. Brear's bilge ejector, for discharging bilge-water from vessels, or for raising and forcing water under various circumstances. D is a chamber having attached a suction-pipe B and discharge-pipe C, and having a steam-pipe entering at one side, with a nozzle directed toward the discharge-pipe. A jet of steam entering through A expels the air from D and C, produces a vacuum in B, and causes water to rise through B, and pass through D and C in a regular and constant stream. Compressed air may be used as a substitute for steam.

Fig. 5823. Another apparatus operating on the same principle as the foregoing. It is termed a Lansdell's steam siphon pump. A is the jet-pipe; B, B, are two suction-pipes, having a forked connection with the discharge-pipe C. The steam jet-pipe entering at the fork offers no obstacle to the upward passage of the water, which moves upward in an unbroken current.

Fig. 5824. Hoard and Wiggin's steam trap for shutting in steam, but providing for the escape of water from steam coils and radiators. It consists of a box, connected at A with the end of the coil or the waste-pipe, having an outlet at B and furnished with a hollow valve D, the bottom of which is composed of a flexible diaphragm. Valve is filled with liquid, and hermetically sealed, and its diaphragm rests upon a bridge over the outlet-pipe. The presence of steam in the outer box so heats the water in valve that the diaphragm expands and raises valve up to the seat *a a*. Water of condensation accumulating reduces the temperature of valve; and as the liquid in valve contracts, diaphragm allows valve to descend and let water off.

Fig. 5825. Ray's steam trap. Valve *a* closes and opens by longitudinal expansion and contraction of waste-pipe A, which terminates in the middle of an attached hollow sphere C. A portion of the pipe is firmly secured to a fixed support B. Valve consists of a plunger which works in a stuffing box in the sphere, opposite the end of the pipe, and it is pressed toward the end of the pipe by a loaded elbow lever D as far as permitted by a stop-screw *b* and stop *c*. When pipe is filled with water, its length is so reduced that valve remains open; but when filled with steam it is expanded so that valve closes it. Screw *b* serves to adjust the action of valve.

Fig. 5826. Gasometer. The open-bottomed vessel A is arranged in the tank B of water, and

partly counterbalanced by weights C, C. Gas enters the gasometer by one and leaves it by the other of the two pipes inserted through the bottom of the tank. As gas enters, vessel A rises, and *vice versâ*. The pressure is regulated by adding to or reducing the weights C, C.

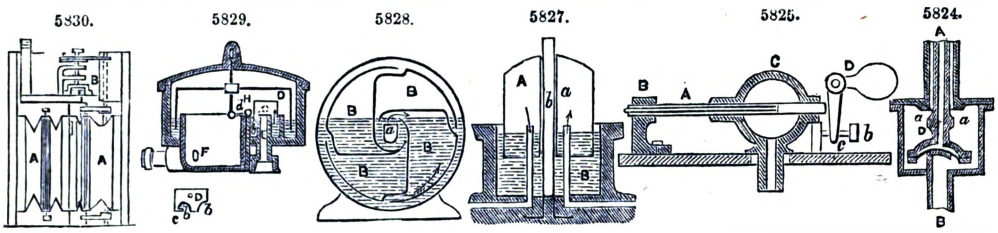

Fig. 5827 Another kind of gasometer. The vessel A has permanently secured within it a central tube *a* which slides in a fixed tube *b* in the centre of the tank.

Fig. 5828. Wet gas meter. The stationary case A is filled with water up to above the centre. The inner revolving drum is divided into four compartments B, B, with inlets around the central pipe *a* which introduces the gas through one of the hollow journals of the drum. This pipe is turned up to admit the gas above the water, as indicated by the arrow near the centre of the figure. As gas enters the compartments B, B, one after another, it turns the drum in the direction of the arrow shown near its periphery, displacing the water from them. As the chambers pass over they fill with water again. The cubic contents of the compartments being known, and the number of the revolutions of the drum being registered by dial-work, the quantity of gas passing through the meter is registered.

Fig. 5829. Powers's gas regulator for equalizing the supply of gas to all the burners of a building or apartment, notwithstanding variations in the pressure on the main, or variations produced by turning gas on or off, to or from any number of the burners. The regulator-valve D, of which a separate outside view is given, is arranged over inlet-pipe E, and connected by a lever *d*, with an inverted cup H, the lower edges of which, as well as those of valve, dip into channels containing quicksilver. There is no escape of gas around the cup H, but there are notches *b* in the valve to permit the gas to pass over the surface of the quicksilver. As the pressure of gas increases it acts upon the inner surface of cup H, which is larger than valve, and the cup is thereby raised, causing a depression of the valve into the quicksilver, and contracting the opening notches *b*, and diminishing the quantity of gas passing through. As the pressure diminishes, an opposite result is produced. The outlet to burners is at F.

Fig. 5830. Dry gas meter. Consists of two bellows-like chambers A, A, which are alternately filled with gas and discharged through a valve B, something like the slide-valve of a steam-engine, worked by the chambers A, A. The capacity of the chambers being known, and the number of times they are filled being registered by dial-work, the quantity of gas passing through the meter is indicated on the dials.

Fig. 5831. A spiral wound round a cylinder to convert the motion of the wind, or a stream of water, into rotary motion.

Fig. 5832. Common windmill, illustrating the production of circular motion by the direct action of the wind upon the oblique sails.

Fig. 5833. Plan of a vertical windmill. The sails are so pivoted as to present their edges in returning toward the wind, but to present their faces to the action of the wind, the direction of which is supposed to be as indicated by the arrow.

Fig. 5834. Common paddle-wheel for propelling vessels. The revolution of the wheel causes the buckets to press backward against the water, and so produce the forward movement of the vessel.

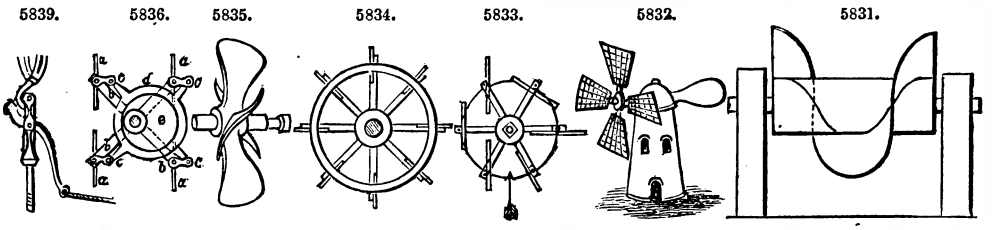

Fig. 5835. Screw-propeller. The blades are sections of a screw-thread, and their revolution in the water has the same effect as the working of a screw in a nut, producing motion in the direction of the axis, and so propelling the vessel.

Fig. 5836. Vertical bucket paddle-wheel. The buckets *a*, *a*, are pivoted into the arms *b*, *b*, at equal distances from the shaft. To the pivots are attached cranks *c*, *c*, which are pivoted at their ends to the arms of a ring *d*, which is fitted loosely to a stationary eccentric *e*. The revolution of the arms and buckets with the shaft causes the ring *d* also to rotate upon the eccentric, and the action of this ring on the cranks keeps the buckets always upright, so that they enter the water and leave it edgewise without resistance or lift, and while in the water are in the most effective position for propulsion.

Fig. 5837. Ordinary steering apparatus. Plan view. On the shaft of the hand-wheel there is a barrel, on which is wound a rope, which passes round the guide-pulleys and has its opposite ends attached to the tiller, or lever, on top of the rudder; by turning the wheel, one

end of the rope is wound on and the other let off, and the tiller is moved in one or the other direction, according to the direction in which the wheel is turned.

Fig. 5838. Capstan. The cable or rope wound on the barrel of the capstan is hauled in by turning the capstan on its axis by means of handspikes, or bars inserted into holes in the head. The capstan is prevented from turning back by a pawl attached to its lower part and working in a circular ratchet on the base.

Fig. 5839. Brown and Level's boat-detaching hook. The upright standard is secured to the boat, and the tongue, hinged to its upper end, enters an eye in the level, which works on a fulcrum at the middle of the standard. A similar apparatus is applied at each end of the boat. The hooks of the tackles hook into the tongues, which are secure until it is desired to detach the boat, when a rope attached to the lower end of each lever is pulled in such a direction as to slip the eye at the upper end of the lever from off the tongue, which, being then liberated, slips out of the hook of the tackle and detaches the boat.

Fig. 5840. Lewis, for lifting stone in building. It is composed of a central taper pin or wedge, with two wedge-like packing pieces arranged one on each side of it. The three pieces are inserted together in a hole drilled into the stone, and when the central wedge is hoisted upon it wedges the packing pieces out so tightly against the sides of the hole as to enable the stone to be lifted.

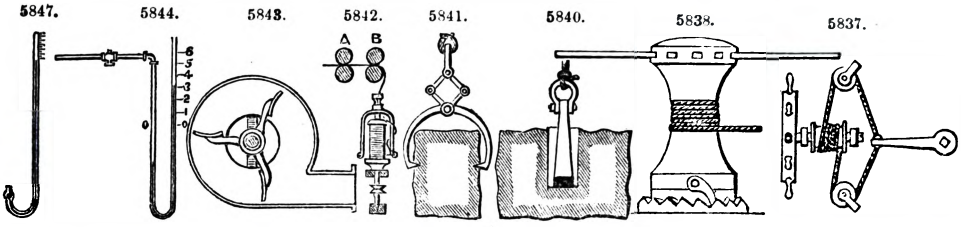

Fig. 5841. Tongs for lifting stones. The pull on the shackle which connects the two links causes the latter so to act on the upper arms of the tongs as to make their points press themselves against or into the stone. The greater the weight the harder the tongs bite.

Fig. 5842. Drawing and twisting in spinning cotton, wool, &c. The front drawing-rolls B rotate faster than the back ones A, and so produce a draught, and draw out the fibres of the sliver or roving passing between them. Roving passes from the front drawing-rolls to throstle, which, by its rotation around the bobbin, twists and winds the yarn on the bobbin.

Fig. 5843. Fan-blower. The casing has circular openings in its sides, through which, by the revolution of the shaft and attached fan-blades, air is drawn in at the centre of the casing, to be forced out under pressure through the spout.

Fig. 5844. Siphon pressure gauge. Lower part of bent tube contains mercury. The leg of the tube, against which the scale is marked, is open at top, the other leg connected with the steam-boiler or other apparatus on which the pressure is to be indicated. The pressure on the mercury in the one leg causes it to be depressed in that and raised in the other, until there is an equilibrium established between the weight of mercury and pressure of steam in one leg, and the weight of mercury and pressure of atmosphere in the other. This is the most accurate gauge known; but as high pressure requires so long a tube, it has given place to those which are practically accurate enough, and of more convenient form.

Fig. 5845. Aneroid gauge, known as the Bourdon gauge, from the name of its inventor, a Frenchman. B is a bent tube closed at its ends, secured at C, the middle of its length, and having its ends free. Pressure of steam or other fluid admitted to tube tends to straighten it more or less, according to its intensity. The ends of tube are connected with a toothed sector-piece, gearing with a pinion on the spindle of a pointer, which indicates the pressure on a dial.

Fig. 5846. Pressure gauge now seldom used. Sometimes known as the Madgeburg gauge, from the name of the place where first manufactured. Face view and section. The fluid whose pressure is to be measured acts upon a circular metal disc A, generally corrugated, and the deflection of the disc under the pressure gives motion to a toothed sector *e*, which gears with a pinion on the spindle of the pointer.

Fig. 5847. Mercurial barometer. Longer leg of bent tube, against which is marked the scale of inches, is closed at top, and shorter one is open to the atmosphere, or merely covered with some porous material. Column of mercury in longer leg, from which the air has been extracted, is held up by the pressure of air on the surface of that in the shorter leg, and rises or falls as the pressure of the atmosphere varies. The old-fashioned weather-glass is composed of a similar tube attached to the back of a dial, and a float inserted into the shorter leg of the tube, and geared by a rack and pinion, or cord and pulley, with the spindle of the pointer.

Fig. 5848. An epicyclic train. Any train of gearing the axes of the wheels of which revolve around a common centre is properly known by this name. The wheel at one end of such a train, if not those at both ends, is always concentric with the revolving frame. C is the frame or train-bearing arm. The centre wheel A, concentric with this frame, gears with a pinion F to the same axle, with which is secured a wheel E that gears with a wheel B. If the first wheel A be fixed, and a motion be given to the frame C, the train will revolve around the fixed wheel, and the relative motion of the frame to the fixed wheel will communicate through the train a rotary motion to B on its axis. Or the first wheel as well as the frame may be made to revolve with different velocities, with the same result except as to the velocity of rotation of B upon its axis.

In the epicyclic train as thus described, only the wheel at one extremity is concentric with the revolving frame; but if the wheel E, instead of gearing with B, be made to gear with the wheel D,

which, like the wheel A, is concentric with the frame, we have an epicyclic train, of which the wheels at both extremities are concentric with the frame. In this train we may either communicate the driving motion to the arm and one extreme wheel, in order to produce an aggregate rotation of the other extreme wheel, or motion may be given to the two extreme wheels A and D of the train, and the aggregate motion will thus be communicated to the arm.

5850. 5849.

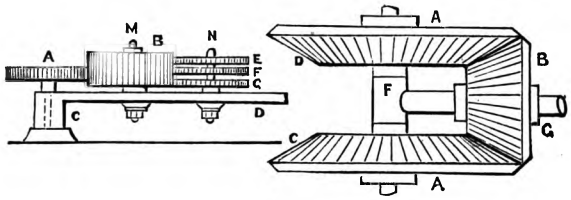

Fig. 5849. A very simple form of the epicyclic train, in which F, G, is the arm, secured to the central shaft A, upon which are loosely fitted the bevel-wheels C, D. The arm is formed into an axle for the bevel-wheel B, which is fitted to turn freely upon it. Motion may be given to the two wheels C, D, in order to produce aggregate motion of the arm, or else to the arm and one of said wheels in order to produce aggregate motion of the other wheel.

Fig. 5850. Ferguson's mechanical paradox, designed to show a curious property of the epicyclic train. The wheel A is fixed upon a stationary stud, about which the arm C, D, revolves. In this arm are two pins M, N, upon one of which is fitted loosely a thick wheel B gearing with A, and upon the other are three loose wheels E, F, G, all gearing with B. When the arm C, D, is turned round on the stud, motion is given to the three wheels E, F, G, on their common axis, namely, the pin N; the three forming with the intermediate wheel B and the wheel A three distinct epicyclic trains. Suppose A to have twenty teeth, F twenty, E twenty-one, and G nineteen; as the arm E, C, D, is turned round F will appear not to turn on its axis, as any point in its circumference will always point in one direction, while E will appear to turn slowly in one, and G in the other direction, which—an apparent paradox—gave rise to the name of the apparatus.

Fig. 5851. Another simple form of the epicyclic train, in which the arm D carries a pinion B, which gears both with a spur-wheel A and an annular wheel C, both concentric with the axis of the arm. Either of the wheels A, C, may be stationary, and the revolution of the arm and pinion will give motion to the other wheel.

Fig. 5852. Another epicyclic train in which neither the first nor last wheel is fixed. *m*, *n*, is a shaft to which is firmly secured the train-bearing arm *k*, *l*, which carries the two wheels *d*, *e*, secured together but rotating upon the arm itself. The wheels *b* and *c* are united, and turn together freely upon the shaft *m*, *n*; the wheels *f* and *g* are also secured together, but turn together freely on the shaft *m*, *n*. The wheels *c*, *d*, *e*, and *f*, constitute an epicyclic train, of which *c* is the first and *f* the last wheel. A shaft A is employed as a driver, and has firmly secured to it two wheels *a* and *h*, the first of which gears with the wheel *b*, and thus communicates motion to the first wheel *c* of the epicyclic train, and the wheel *h* drives the wheel *g*, which thus gives motion to the last wheel *f*. Motion communicated this way to the two ends of the train produces an aggregate motion of the arm *k*, *l*, and shaft *m*, *n*.

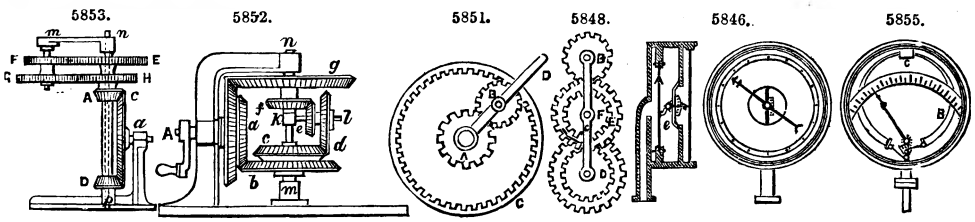

This train may be modified; for instance, suppose the wheels *g* and *f* to be disunited, *g* to be fixed to the shaft *m*, *n*, and *f* only running loose upon it. The driving shaft A will, as before, communicate motion to the first wheel *c* of the epicyclic train by means of the wheels *a* and *b*, and will also by *h* cause the wheel *g*, the shaft *m*, *n*, and the train-bearing arm *k*, *l*, to revolve, and the aggregate rotation will be given to the loose wheel *f*.

Fig. 5853. Another form of epicyclic train, designed for producing a very slow motion. *m* is a fixed shaft, upon which is loosely fitted a long sleeve, to the lower end of which is fixed a wheel D, and to the upper end a wheel E. Upon this long sleeve there is fitted a shorter one which carries at its extremities the wheels A and H. A wheel C gears with both D and A, and a train-bearing arm *m*, *n*, which revolves freely upon the shaft *m*, *p* carries upon a stud at *n* the united wheels F and G. If A have ten teeth, C one hundred, D ten, E sixty-one, F forty-nine, G forty-one, and H fifty-one, there will be 25,000 revolutions of the train-bearing arm *m*, *n*, for one of the wheel C.

MECHANICAL POWERS. Fr., *Machines simples*, *Puissances méchaniques*, Ger., *Mechanische Potenzen*; Span., *Fuerzas mécanicas*.

The Mechanical Powers are certain standard machines which enable us to apply, economically, large forces to produce small effects, and small forces to produce in time great effects, and which are further capable of transferring forces from their natural point of action, to another point of application. The mechanical powers are the lever, the wheel and axle, the pulley, the inclined plane, the wedge, the screw, and the toggle. To these sometimes are added the toothed wheel. None of these machines create new power, though several of them store up the successive additions of power which successive impulses give, until the sum total comes to be equal to the demand. All of the mechanical powers can be reduced to the two simplest, the lever and the inclined plane; and these derive their chief efficacy from the equivalence which they produce between parts of the

forces which prevent our results, and resistances that we can call into action in almost unlimited quantity. Thus the lever transfers the excess of the one weight over the other or the sum of the weights, to be borne by the fulcrum; and the inclined plane throws part of the gravitating forces upon the board which bears the weight. We shall merely enumerate the formulæ for what is called the mechanical advantage in each: that is, the value of $\frac{W}{P}$, where W is the weight, or more properly resistance, and P the power applied to overcome it. In the lever, $\frac{\text{the arm of the power}}{\text{the arm of the weight}}$, the arm being distance from fulcrum. In the wheel and axle, $\frac{\text{the radius of the wheel}}{\text{the radius of the axle}}$. In the pulley, this varies with the peculiar system of pulleys. In the inclined plane, $\frac{\text{the length of the plane}}{\text{the height of the plane}}$. In the wedge, $\frac{\text{the side of the wedge}}{\text{half the back of the wedge}}$. In the screw, $\frac{\text{the circumference described by the power}}{\text{the distance between two contiguous threads}}$. In the toothed wheel,

$$\frac{\text{the number of teeth in the wheel of W}}{\text{the number of teeth in the wheel of P}}.$$

For the toggle, see p. 618.

See MECHANICAL MOVEMENTS.

MERCURY. FR., *Argent vif*, *Mercure*; GER., *Quicksilver*; ITAL., *Argento vivo*; SPAN., *Mercurio*.

Mercury is remarkable as being the only metal that is fluid at ordinary temperatures; its atomic weight is 200; molecular weight, 200. It is of a silvery white colour, and possesses a striking metallic lustre. Native mercury occurs in cavities of the ores, but only in very small quantities; the chief source from which it is obtained is the sulphide of mercury, known as cinnabar, the principal mines of which are at Almaden, in Spain, and at Iddria, in Illyria. The metallurgical processes differ slightly with the locality as regards the arrangement of the apparatus employed, but chemically the same process is everywhere adopted, namely, that of roasting the ore. The heat, in this case, causes the sulphur to pass into the state of a sulphurous anhydride, and the mercury is liberated.

HgS	+	$\left.\begin{matrix}O\\O\end{matrix}\right\}$	=	SO_2	+	Hg
Sulphide of mercury.		Oxygen.		Sulphurous anhydride.		Mercury.

Mercury may also be obtained from its sulphide by heating the latter with iron.

HgS	+	Fe	=	FeS	+	Hg
Sulphide of mercury.		Iron.		Sulphide of iron.		Mercury.

The mercury obtained by one of these methods is filtered through chamois skins and enclosed in iron bottles. If it be required to obtain the metal pure, it must be acted upon by a quantity of nitric acid insufficient to dissolve it, and left for twenty-four hours. At first there is formed nitrate of mercury, and the foreign metals afterwards substitute themselves for the mercury of this nitrate. At the expiration of twenty-four hours, all these metals have entered into a state of solution, and the unattached portion of mercury remains in a state of absolute purity.

At a temperature of $-39°$ mercury freezes, when it contracts considerably, and becomes malleable; at 662° it boils, and forms a colourless vapour, the specific gravity of which is 6·976. In its liquid state its specific gravity is 14·4, and in a solid state 13·59. Pure mercury does not adhere to the smooth surfaces of glass or porcelain vessels, but when allied with lead or other metal it, on the contrary, adheres, and assumes the form of elongated or *tailed* drops. When exposed to the air mercury becomes oxidized, but slowly; this oxidation is greatly facilitated by a high temperature. Ozonised oxygen also readily causes oxidation at a low temperature. Hydrochloric acid has no effect upon it; but nitric acid dissolves it rapidly. When cold, and with an excess of metal, minimum nitrate of mercury is formed, and when heated with an excess of acid, maximum nitrate is produced. Boiling sulphuric acid dissolves mercury with a liberation of sulphurous anhydride; the sulphate resulting from the operation is either maximum or minimum, according as the metal or the acid predominates.

When exposed to the influence of the air and of acids, the alkaline chlorides cause mercury to pass into the state of a chloride. This reaction explains the absorption of the metal by the skin. Chlorine, bromine, and iodine combine directly with mercury, and the same may be said of sulphur. The absorbable mercurial compounds act as poison on the animal system, and those whose occupations expose them to the influence of these compounds are often attacked by a malady known as mercurial palsy.

Mercury, like copper, is diatomic, and its atoms, also like those of copper, possess the property of combining together while losing a portion only of their capacity of saturation. Hence it follows that not only the atom Hg, but the group Hg_2 acts as a diatomic radical, and is capable of entering into combination with the various radicals. The compounds in which the atom Hg enters are called maximum, or mercuric compounds, and those in which the group Hg_2 enters are known as minimum, or mercurous compounds. The principal maximum compounds are the following;—The bichloride of mercury, $HgCl_2$; the bromide, $HgBr_2$; the biiodide, HgI_2; the bifluoride, $HgFl_2$; the protoxide, HgO; and the protosulphide, HgS; to which must be added the maximum salts resulting from the substitution of the diatomic atom Hg for the basic hydrogen of the acids. The following are the principal minimum compounds;—The protochloride of mercury, Hg_2Cl_2, the protobromide, Hg_2Br_2; the protoiodide, Hg_2I_2; the suboxide, Hg_2O; the subsulphide, Hg_2S; and the minimum salts resulting from the substitution of the diatomic radical Hg_2 for the typical hydrogen of the acids.

Mercuric Chloride, $Hg\begin{Bmatrix}Cl\\Cl\end{Bmatrix}$.—The bichloride of mercury has received the name of corrosive sublimate; it may be obtained by acting upon mercury with chlorine, or by distilling a compound of marine salt and maximum sulphate of mercury.

1. Hg (Mercury.) $+ \begin{Bmatrix}Cl\\Cl\end{Bmatrix}$ (Chlorine.) $= Hg\begin{Bmatrix}Cl\\Cl\end{Bmatrix}$ (Mercuric chloride.)

2. $\begin{Bmatrix}SO\\Hg\end{Bmatrix}O_2$ (Mercuric sulphate.) $+ 2\left(\begin{Bmatrix}Na\\Cl\end{Bmatrix}\right)$ (Chloride of sodium.) $= \begin{Bmatrix}SO_2\\Na_2\end{Bmatrix}O_2$ (Sulphate of sodium.) $+ Hg\begin{Bmatrix}Cl\\Cl\end{Bmatrix}$ (Corrosive sublimate.)

As the mercuric sulphate nearly always contains a small quantity of mercurous sulphate which would give protochloride, Hg_2Cl_2, by reacting upon the iodic chloride, when the second method is employed, it is usual to add a little bioxide of manganese to the compound. On coming in contact with the chloride of sodium, and the excess of acid that the mercuric sulphate always contains, this bioxide causes a slight evolution of chlorine, which converts the small quantity of protochloride into bichloride.

Hg_2Cl_2 (Protochloride of mercury.) $+ \begin{Bmatrix}Cl\\Cl\end{Bmatrix}$ (Chlorine.) $= 2\,HgCl_2$ (Bichloride of mercury.)

Bichloride of mercury dissolves more readily in boiling than in cold water. Alcohol dissolves it better than water, and ether better than alcohol; its alcoholic solution leaves it, by evaporation, crystallized in right prisms with a rhomboidal base; by sublimation it crystallizes in rectangular octahedrons. Its specific gravity is 6·5; as a vapour its gravity is 9·42. It fuses at about 509°, and boils at 570°.

By acting upon a solution of sublimate with a reducing substance, such as the protochloride of tin, we obtain a white precipitate of protochloride of mercury; and if the compound be boiled the protochloride is reduced to the state of metallic mercury. If a solution of sublimate is poured into ammonia, a white precipitate is thrown down, which has received the name of chloro-amide of mercury, and which is represented by the formula $\begin{Bmatrix}Hg\\Hg\\H_4\end{Bmatrix}N_2, Cl_2$. If, on the contrary, ammonia is poured into the solution of sublimate, a white substance is thrown down represented by the formula $(HgCl_2)^3, Hg\,H_4\,N_2$; this latter substance may be regarded as a combination of bichloride and amide of mercury. Albumen gives with the sublimate an insoluble precipitate, the composition of which is imperfectly known, and which seems to vary with age. The sublimate has a strong tendency to form double chlorides with the alkaline chlorides. The formula of these salts is $\begin{Bmatrix}Hg\\Cl_2\end{Bmatrix}, 2\left(\begin{Bmatrix}Na\\Cl\end{Bmatrix}\right)$.

The sublimate is a violent poison, and the best antidote is a glass or two of albuminous water, followed by an emetic. The albumen, by rendering the sublimate insoluble, prevents it from being absorbed before the emetic has had time to take effect. The action of corrosive sublimate upon albumen renders it useful in preserving animal matters. It is one of the compounds which serve as a base to the mercurial pharmaceutical preparations.

Mercuric Bromide, $Hg\begin{Bmatrix}Br\\Br\end{Bmatrix}$.—This substance is prepared by the same methods as the chloride, and it possesses similar properties.

Biiodide of Mercury, $Hg\begin{Bmatrix}I\\I\end{Bmatrix}$.—The biiodide may be obtained either directly or by double decomposition. To obtain it directly, 200 parts of mercury are pounded in a mortar with 254 parts of iodine to render the operation easier, a little alcohol is added, and the pounding is continued until the mass assumes a beautiful red colour, and no globule of metallic mercury is visible under the magnifying glass. To obtain it by double decomposition, a watery solution of 318 parts of potassic iodide is added to a watery solution of 271 parts of corrosive sublimate, when a beautiful orange red precipitate of biiodide of mercury is thrown down.

$Hg\begin{Bmatrix}Cl\\Cl\end{Bmatrix}$ (Bichloride of mercury.) $+ 2\left(\begin{Bmatrix}K\\I\end{Bmatrix}\right)$ (Iodide of potassium.) $= 2\left(\begin{Bmatrix}K\\Cl\end{Bmatrix}\right)$ (Chloride of potassium.) $+ Hg\begin{Bmatrix}I\\I\end{Bmatrix}$ (Mercuric iodide.)

If an excess of either reagent were employed in the place of the atomic proportions given above, the precipitate would be redissolved.

When biiodide of mercury is dissolved in a boiling solution of iodide of potassium, a portion of this iodide is deposited in crystals by the cooling of the liquor; the crystals so obtained are red. Biiodide of mercury is sufficiently volatile to be sublimed; in this case it is deposited in yellow crystals, which become red when pulverized, and during this latter transformation, heat is evolved. The yellow crystals of biiodide of mercury belong to the fourth crystalline system, whilst the red crystals belong to the second; this salt is, therefore, a dimorphous substance. The biiodide combines with the alkaline iodides; the double iodides which it forms are represented by the formula $\begin{Bmatrix}Hg\\I_2\end{Bmatrix}, 2\left(\begin{Bmatrix}M\\Cl\end{Bmatrix}\right)$.

Protosulphide of Mercury, Hg S.—This substance may be prepared by heating sulphur and mercury together, or by precipitating a maximum salt of mercury by sulphuretted hydrogen.

$$\underset{\text{Bichloride of mercury.}}{Hg\begin{Bmatrix}Cl\\Cl\end{Bmatrix}} + \underset{\text{Sulphuretted hydrogen.}}{\begin{matrix}H\\H\end{matrix}\Big\}S} = \underset{\text{Hydrochloric acid.}}{2\begin{pmatrix}H\\Cl\end{pmatrix}} + \underset{\text{Sulphide of mercury}}{HgS}$$

In the latter case, the sulphide of mercury constitutes a black mass. This mass, when dried and heated in balloons with an open neck, becomes volatilized, and is sublimed upon the cold portions of the balloons in crystals of a violet-red colour. These crystals are identical with those found in nature, and known by the name of cinnabar. The sulphide of mercury is therefore dimorphous like the iodide. It becomes volatilized at a high temperature without being decomposed if protected from the air; but in a current of air, it is converted into mercury and sulphurous anhydride.

$$\underset{\text{Sulphide of mercury.}}{HgS} + \underset{\text{Oxygen.}}{\begin{matrix}O\\O\end{matrix}\Big\}} = \underset{\text{Sulphurous anhydride.}}{SO_2} + \underset{\text{Mercury.}}{Hg}$$

The specific gravity of natural cinnabar is 8·1; but that of the artificial substance may be as low as 7·65. There exists a variety of mercuric sulphide that is of a much purer red than cinnabar. This variety, known as vermilion, is prepared by triturating for several hours a compound consisting of 300 parts of mercury, 114 of sulphur, 400 of water, and 75 of potassa. The mass thus formed is black, but after it has been exposed for some time to a temperature of 122°, it assumes a beautiful red colour. The vermilion hue, which makes it valuable as a pigment, is attributed to the influence of the alkaline sulphide formed in the reaction.

Protoxide of Mercury.—There are two varieties of protoxide, as there are two of sulphide and iodide; one of these varieties is yellow, the other red. Protoxide of mercury, in its yellow variety, is obtained by precipitating a salt of mercury by a soluble base.

$$\underset{\text{Chloride of mercury.}}{Hg\begin{Bmatrix}Cl\\Cl\end{Bmatrix}} + \underset{\text{Potassa.}}{2\begin{pmatrix}K\\H\end{pmatrix}O} = \underset{\text{Chloride of potassium.}}{2\begin{pmatrix}K\\Cl\end{pmatrix}} + \underset{\text{Protoxide of potassium.}}{HgO} + \underset{\text{Water.}}{\begin{matrix}H\\H\end{matrix}\Big\}O}$$

The precipitate thus obtained is anhydrous; it has merely to be collected upon a filter and washed and dried. The red oxide is prepared either by heating mercury while exposed to the air, or by slightly calcining nitrate of mercury. The oxide obtained from the maximum nitrate is redder than that obtained from the minimum nitrate. The process of heating mercury in contact with the air is no longer resorted to. We owe to it the name of *precipitate per se*, which the bioxide still bears in pharmacy. Oxide of mercury is decomposed at 752°, so that between the temperature at which the metal becomes oxidized and that at which it is reduced, there is a difference of hardly more than 122°. One part of this oxide appears to dissolve in from 20 to 30 parts of water; the solution does not act upon litmus, but if marine salt be added, chloride of mercury and hydrate of sodium are formed, and the alkaline reaction manifests itself with intensity. A blue light appears to reduce the bioxide of mercury, but a white light does not affect it. The yellow oxide, if allowed to remain in a flask with ammonia, combines with the elements of this substance without changing colour. The product thus formed is a powerful base which combines with the acids without undergoing decomposition, and form well-defined salts. These salts have been named ammonio-mercuric salts. The base corresponds to the formula $(HgO)^3 N_2 Hg H_4 + 3 H_2 O$. Supposing the water which it contains to be water of crystallization, we may represent the ammonio-mercuric oxide by the following formula;—$\left.\begin{matrix}Hg\\(HgOH)\\(HgOH)\\(HgOH)\\H\end{matrix}\right\} N_2 + 3\,aq.$ This would be a double-condensed ammonia in which diatomic Hg held the place of H_2, and in which three times the monatomic residue (HgOH) was substituted for 3 H.

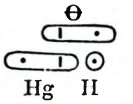

$= (HgOH)$.

Nitrate of Mercury (*Mercuric Nitrate*), $Hg\begin{Bmatrix}ONO_2\\ONO_2\end{Bmatrix}$.—When mercury is dissolved in an excess of boiling nitric acid and the concentrated solution left to evaporate spontaneously in vacuo, crystals of basic nitrate of mercury are formed, and the liquor holds in solution uncrystallizable neutral nitrate of mercury; water throws down another basic nitrate from this solution.

Sulphate of Mercury, $\begin{matrix}SO_2\\Hg\end{matrix}\Big\}O_2$.—This salt is prepared by acting upon metallic mercury with an excess of boiling sulphuric acid. The salt is deposited under the form of a crystalline powder or in little needle-like forms. Water decomposes it and forms a basic salt known as turpeth mineral. If this latter substance is boiled for a long time in water, it loses the elements of the sulphuric anhydride and leaves a residue of bioxide of mercury. The formula for turpeth mineral is

$$\left.\begin{matrix}SO_2\\\begin{pmatrix}Hg\\Hg\\Hg\end{pmatrix}\quad O\\\qquad\quad O\end{matrix}\right\} O_2$$

Photochloride of Mercury (calomel).—Protochloride of mercury may be obtained by triturating the bichloride with mercury, or by distilling the minimum sulphate of mercury with chloride of sodium.

1. $$\underset{\text{Bichloride of mercury.}}{Hg\,Cl_2} + \underset{\text{Mercury.}}{Hg} = \underset{\text{Protochloride of mercury.}}{Hg_2\,Cl_2}$$

2. $$\underset{\text{Minimum sulphate of mercury.}}{\left.\begin{matrix}S\,\Theta_2\\ H_2\end{matrix}\right\}\Theta_2} + 2\underset{\text{Chloride of sodium.}}{\left(\begin{matrix}Na\\ Cl\end{matrix}\right)} = \underset{\text{Sulphate of soda.}}{\left.\begin{matrix}S\,\Theta_2\\ Na_2\end{matrix}\right\}\Theta_2} + \underset{\text{Mercurous chloride.}}{Hg_2\,Cl_2}$$

This salt may also be prepared by precipitating a minimum soluble salt of mercury by hydrochloric acid, or by a chloride in solution in water.

$$\underset{\text{Mercurous nitrate.}}{Hg_2\left\{\begin{matrix}\Theta\,N\,\Theta_2\\ \Theta\,N\,\Theta_2\end{matrix}\right.} + 2\underset{\text{Hydrochloric acid.}}{\left(\begin{matrix}H\\ Cl\end{matrix}\right)} = \underset{\text{Mercurous chloride.}}{Hg_2\,Cl_2} + \underset{\text{Nitric acid.}}{2\,N\,H\,\Theta_3}$$

The chloride thrown down is known in pharmacy as white precipitate, and is the most active. That prepared by the other two processes is termed calomel. If distilled, and its vapour received in an apparatus full of air, this fluid intervenes between the molecules at the moment of solidification, and a powder is thrown down known as steam calomel, because steam was formerly employed in this operation instead of air. Calomel thus prepared is weaker in its action than the white precipitate, but stronger than that obtained by subliming the protochloride under the form of solid masses and afterwards pulverizing it.

Mercurous chloride crystallizes by sublimation in prisms of the second order. The protochloride is white; when exposed to the light, it is decomposed into mercury and sublimate.

$$\underset{\text{Protochloride of mercury.}}{Hg_2\,Cl_2} = \underset{\text{Corrosive sublimate.}}{Hg\,Cl_2} + \underset{\text{Mercury.}}{Hg}$$

A similar decomposition appears to take place when it is vaporized. Calomel is, indeed, one of those substances whose vaporous density seems to form an exception to Ampère's law, this density being only half what it ought to be. This anomaly is explained, as in the case of chloride of ammonia, by admitting the occurrence of dissociation. Calomel is insoluble in water, alcohol, and ether. Nitric and hydrochloric acid attack it. With the former of these acids, it is converted into a compound of bichloride and nitrate; with the latter it is converted wholly into bichloride. When heated with the alkaline chlorides, calomel is transformed into corrosive sublimate. This action may take place at about 100°, if organic matters intervene, especially in the presence of acids and the oxygen of the air. This fact is of great importance; for as the stomach always contains acids, air and organic matters, if alkaline chlorides were administered at the same time as calomel, sublimate would be formed and the patient poisoned. When in contact with ammonia, calomel is converted into a black substance answering the formula

$$\left.\begin{matrix}Hg_2\\ Hg_2\\ H_4\end{matrix}\right\}N_2\,Cl_2 = Hg_4\,N_2\,H_4,\,Cl_2.$$

Protobromide of Mercury, $Hg_2\,Br_2$.—This salt is prepared in the same manner as the protochloride, and it possesses similar properties. No use whatever is made of it.

Protoiodide of Mercury, $Hg_2\,I_2$.—This substance may be obtained by precipitating mercurous nitrate by iodide of potassium.

$$\underset{\text{Mercurous nitrate.}}{Hg_2\left\{\begin{matrix}\Theta\,N\,\Theta_2\\ \Theta\,N\,\Theta_2\end{matrix}\right.} + 2\underset{\text{Iodide of potassium.}}{\left(\begin{matrix}K\\ I\end{matrix}\right)} = 2\underset{\text{Nitrate of potassa.}}{\left(\begin{matrix}N\,\Theta_2\\ K\end{matrix}\right\}\Theta\Big)} + \underset{\text{Protoiodide of mercury.}}{Hg_2\,I_2}$$

But, as the mercurous nitrate is always acid, iodine is liberated during the reaction, and this iodine converts a portion of the protoiodide into biiodide. Consequently, if it be required to obtain pure protoiodide, it is better to triturate under alcohol 200 parts of mercury with 127 parts of iodine. The protoiodide is of a greenish-yellow colour. When heated suddenly, it becomes volatilized without being decomposed; but when heated slowly, it yields up half of its metal and passes into the state of biiodide. It is insoluble in water, alcohol, and ether; when heated with the alkaline iodides it gives mercury, while at the same time biiodide is formed, to which a double iodide succeeds. The protoiodide of mercury is the mercurial compound that serves as a base to most of the pharmaceutical preparations of mercury intended for internal application.

Subsulphide of Mercury, $Hg_2\,S$.—This very unstable substance is produced when a soluble mercurous salt is precipitated by hydrosulphuric acid.

$$\underset{\text{Murcurous nitrate.}}{Hg_2\left\{\begin{matrix}\Theta\,N\,\Theta_2\\ \Theta\,N\,\Theta_2\end{matrix}\right.} + \underset{\text{Hydrosulphuric acid.}}{\left.\begin{matrix}H\\ H\end{matrix}\right\}S} = 2\underset{\text{Nitric acid.}}{\left(\begin{matrix}N\,\Theta_2\\ H\end{matrix}\right\}\Theta\Big)} + \underset{\text{Mercurous sulphide.}}{Hg_2\,S}$$

But it is almost immediately decomposed into metallic mercury and protosulphide.

$$\underset{\text{Subsulphide of mercury.}}{Hg_2\,S} = \underset{\text{Mercury.}}{Hg} + \underset{\text{Protosulphide of mercury.}}{Hg\,S}$$

Subsulphide of mercury is black.

Suboxide of Mercury, $Hg_2\,\Theta$.—This suboxide is a black powder, and is obtained by precipitating minimum nitrate of mercury by potassa.

$$\underset{\text{Minimum nitrate of mercury.}}{Hg_2\left\{\begin{matrix}\Theta\,N\,\Theta_2\\ \Theta\,N\,\Theta_2\end{matrix}\right.} + 2\underset{\text{Potassa.}}{\left(\begin{matrix}K\\ H\end{matrix}\right\}\Theta\Big)} = 2\underset{\text{Nitrate of potassa.}}{\left(\begin{matrix}N\,\Theta_2\\ K\end{matrix}\right\}\Theta\Big)} + \underset{\text{Water.}}{\left.\begin{matrix}H\\ H\end{matrix}\right\}\Theta} + \underset{\text{Suboxide of mercury.}}{Hg_2\,S}$$

It is as unstable as the subsulphide, and is decomposed in the same manner as the latter, namely, into mercury and protoxide.

$$\underset{\text{Suboxide of mercury.}}{Hg_2O} = \underset{\text{Protoxide of mercury.}}{HgO} + \underset{\text{Mercury.}}{Hg}$$

Mercurous Nitrate, $\left.\begin{matrix}(NO_2)^2\\ Hg_2\end{matrix}\right\}O_2$.—This substance is prepared by dissolving mercury in an excess of dilute nitric acid. In a little time, beautiful crystals are deposited, the form of which is derived from an oblique rhomboidal prism. This salt dissolves in a very small quantity of water; if the water is in excess, a basic salt is thrown down, and a portion of the neutral salt remains dissolved by the nitric acid which has been liberated. When cold dilute nitric acid is allowed to stand with a great excess of mercury, a condensed salt is formed existing as large colourless crystals; the formula of this salt is;—

$$\left.\begin{matrix}ONO_2\\ Hg_2\end{matrix}\right\}O$$
$$\left.\begin{matrix}Hg_2\\ Hg_2\end{matrix}\right\}O$$
$$\left.\begin{matrix}ONO_2\\ Hg_2\end{matrix}\right\}O$$

Minimum Sulphate of Mercury, $\left.\begin{matrix}SO_2\\ Hg_2\end{matrix}\right\}O_2$.—This salt is used only in the preparation of calomel. It is obtained by converting 8 parts of mercury into maximum sulphate, and afterwards triturating it with a quantity of metal equal to that already employed.

Analytic Reactions of the Mercurial Salts.—These salts are distinguished in analyses by the following characteristics;—

1. They give with hydrosulphuric acid a black precipitate insoluble in sulphide of ammonium and in boiling nitric acid.

2. A piece of copper determines a deposit of mercury, with which it amalgamates and assumes a white colour. Its original colour may be restored by heating it to vaporize the mercury. If the operation be performed so as to condense the vapours, liquid mercury may be obtained.

The following characteristics distinguish the maximum from the minimum salts of mercury;—

1. The caustic alkalies and ammonia produce in a solution of the minimum salts a black precipitate of oxide of mercury, which is almost instantaneously decomposed into mercury and protoxide of that metal.

$$\underset{\text{Suboxide of mercury.}}{Hg_2O} = \underset{\text{Protoxide of mercury.}}{HgO} + \underset{\text{Mercury.}}{Hg}$$

The maximum salts give, on the contrary, with the alkalies, a yellow precipitate of protoxide stable at ordinary temperatures.

2. The soluble chlorides and hydrochloric acid determine the formation of a white precipitate of protochloride of mercury in the solution of minimum salts, but do not trouble that of the maximum salts.

3. The soluble iodides give with the minimum salts a greenish-yellow precipitate of protoiodide, whilst they produce with the maximum salts an orange-red precipitate, soluble in an excess of mercurial salt or alkaline iodide.

METALLOID. Fr., *Métalloïde;* Ger., *Metalloid;* Span., *Metaloide.*

See Metallurgy.

METALLURGY. Fr., *Métallurgie;* Ger., *Metallurgie;* Ital., *Metallurgia;* Span., *Metalurgia.*

Metallurgy is the art of working metals, comprehending the whole process of separating them from other matters in the ore, sometimes refining and parting them; in a more limited and usual sense, the operation of obtaining them from their ores.

Classification of the Metals.—Simple substances have been placed in a series so that each should be electro-positive relatively to the elements that precede, and electro-negative relatively to those which follow it. But as this series indicates neither the analogies nor the differences of properties possessed by the substances, it must be regarded as utterly irrational and unsuitable for purposes of study. Another division of substances is into metalloids and metals, these two classes being then subdivided. But the characters which serve to establish this division are far from being sufficient. The only natural classification would be to separate the simple substances into several families, each of which should contain those which have the same atomic character. Then, in each family, the substances might be arranged on the principle of the electrical seriation. Thus the first family should include the monatomic substances, fluorine, chlorine, bromine, iodine, hydrogen, silver, lithium, sodium, potassium, rubidium, cesium, and perhaps thallium, the place of which has not yet been determined with certainty. The former of these substances are electro-negative and the latter electro-positive.

We shall confine ourselves, however, to the classification which divides substances into metalloids and metals, adding to the metalloids certain elements hitherto reputed metals, but which, since the researches of Marignac, can no longer be separated from silicium. As to the subdivisions, we shall found these upon the atomic characteristics of the substances. Yet we shall make a few exceptions to this general rule, and in some cases class certain substances, not according to their absolute, but according to their most common atomic values, or, as some writers on chemistry aptly express it, their *quantivalence.* We shall proceed thus whenever the absolute atomic value manifests itself only in very rare instances, as, for example, in the cases of oxygen, sulphur, selenium, and tellurium, which are by nature tetratomic, but which almost always act as bivalents, and in the case of iodine, which in the immense majority of instances acts as monovalent, although it is triatomic. The following Table shows the distinguishing features of the metalloids and the metals;—

Metalloids.	Metals.
1. Several of the metalloids are gaseous.	There exists no gaseous metal.
2. The metalloids do not possess the lustre called metallic.	The metals possess a lustre called metallic.
3. The metalloids are bad conductors of heat and electricity.	The metals are good conductors of heat and electricity.
4. The metalloids have a relatively low specific gravity.	The metals have a relatively high specific gravity.
5. The oxides of the metalloids, on combining with water, usually produce acids, rarely bases.	The oxides of the metals, on combining with water, produce bases, rarely acids.
6. The metalloids are always electro-negative in the compounds which they form on uniting with the metals.	The metals are always electro-positive in the compounds which they form on uniting with the metalloids.

Subdivision of the Metalloids.—We shall divide the metalloids into five natural families; our classification is that of Dumas, slightly modified.

First Family.—This includes the monatomic metalloids, namely, chlorine, bromine, iodine, fluorine, and hydrogen.

Second Family.—This includes the diatomic metalloids, which are—oxygen, sulphur, selenium, and tellurium.

Third Family.—There is as yet only one metalloid in this family, namely, boron, which is triatomic.

Fourth Family.—Under this head we place the tetratomic metalloids, namely, silicium, zirconium, titanium, tin, and thorium.

Fifth Family.—This includes the pentatomic metalloids, which are — nitrogen, phosphorus, arsenic, antimony, bismuth, uranium, tantalum, and niobium.

Metals.—The number of metals which are regarded as useful is very limited. But as many which are of no direct practical use enter into combination with those which are generally useful, it is necessary to allude to some of the former, although their interest arises solely from their combination with others. In entering on this part of our work we are under the necessity of classifying the metals in some such manner as shall be useful to the smelter. The most rational classification appears to be founded upon the relation of metals to oxygen, supposing that the reduction of oxides is effected by means of carbon. The number of elements which form minerals is sixty-two, all of which have more or less influence in metallurgical operations. About fifty of these elements are considered metals by chemists, of which nearly half the number are found in such large quantities as to be of importance to the smelter. A large number of metals form slags, as oxides or other compounds, and are hardly known in their pure condition; still these are of high interest, not only because they form slags, but because these slags invariably impart a peculiar quality to the metal which is smelted under their influence. We may therefore divide the useful metals into two groups, the one which forms chiefly slags, and the other chiefly metals. To the first division belong, potassium, sodium, calcium, magnesium, manganese, aluminum, selenium, titanium, tellurium, arsenic, and chromium. The second group will then consist of zinc, cadmium, iron, nickel, cobalt, antimony, lead, bismuth, copper, mercury, silver, platinum, and the platinum metals, and gold.

Instead of describing the general qualities of metals, which we assume to be known by our readers, we insert the following Table, which furnishes all the information of this kind which is here required;—

Names.	Colour.	Specific gravity.	Fusibility.	Malleability.	Volatile at	Decomposing water.	Decomposes.
Potassium	grey-white	·865	136°	like wax, brittle at 32°	red heat	any temperature	all minerals
Sodium	„	·972	194°	malleable at 32°	„	„	do.except potassa compounds
Calcium	„	1·58		„	„	„	„
Magnesium	white	1·70	red heat	„	„	red heat	„
Manganese	grey-white	5·85	high heat	brittle, soft		any temperature	„
Aluminum	white	2·6	„	malleable		decomp.air at red h.	„
Selenium	red-brown	4·3	212°	very brittle	red heat	„	
Titanium	red	4·3	infusible	„		„	
Tellurium	grey-white	6·2	600°	„	red heat	„	
Arsenic	grey	5·67	400°	brittle	356°	any temperature	
Chromium	„	7·01	high heat	„		very permanent	
Zinc	white	7·	770°	malleable	white heat	at 400°	
Cadmium	„	8·6	550°	„	600°	burns in air	
Iron	„	7·78		„	very high h.	at any temperature	decompose the following
Nickel	„	8·2		„	„	„	„
Cobalt	grey	8·5		brittle	„	red heat	„
Antimony	white	6·7	932°	„	white heat	permanent	„
Lead	„	11·3	594°	malleable	„	„	„
Bismuth	white-yellow	9·8	476°	„	„	„	„
Copper	red	8·8	1996°	„	high heat	„	„
Mercury	white	13·5	39°	„	680°	„	„
Silver	„	10·4	2000°	„	high heat	very permanent	„
Platinum	blue-white	21·5	very high heat	very malleable	very high h.	„	„
Rhodium	grey-white	11·	melts in saltpetre	brittle	„	„	„
Iridium	„	21·80	high heat	malleable	„	„	„
Osminum	blue-black	10·	„		„	heated in air	„
Palladium	blue-white	11·8	„	„	„	high heat in air	„
Gold	yellow	19·4	2200°	very malleable	moderate h.	permanent	

All the metals, with few exceptions, are remarkable for a high and peculiar lustre; they conduct heat and electricity better than any other substance. They are considered as opaque, but this can be no absolute property, for all metals are porous, and consequently must transmit light when in a body sufficiently thin. The affinity of metals for oxygen is remarkably strong; but under certain conditions, the oxygen is removed by chlorine, sulphur, and other substances. The compounds which are of interest to the metallurgist, are the oxides, carburets, sulphurets, phosphurets, chlorides, arseniurets, silicides, but the salts of the metallic oxides are of the most interest, such as silicates, carbonates, phosphates, chlorides.

Affinity for Oxygen.—Metals are, generally speaking, combustible. They generate heat under the same laws as carbon and hydrogen. It makes no difference in the quantity of heat generated, whether we burn zinc with a pound of oxygen, or carbon with the same weight of oxygen. But, while potassium burns on water, gold must be combined with chlorine before it can be oxidized, that is, its affinity is so feeble, or its body so compact, that it must be dissolved, or divided, into the most minute atoms before it can be combined with oxygen. The metals never combine with any oxidized substance, and least of all with their own oxides, however determined their affinity for oxygen may be. To this rule the exceptions are very few. This is one of the most important peculiarities of metals; and it is the best auxiliary to the smelter. This want of affinity for other substances is the reason why fluid metals appear with a convex surface. The same property is strikingly shown in the refining of precious metals on the cupel; it is the cause of fibres in wrought iron. The form under which metals most readily oxidize is of high interest; but as it depends upon many circumstances besides affinity, we will point out the means by which they are deprived of oxygen, from which the reverse may be deduced. Metals which are deprived of their oxygen by the mere application of heat, are, mercury, silver, gold, platinum, palladium, rhodium, iridium, and osmium; for this reason these are termed precious metals.

Those metals which retain their oxygen at high temperatures, and in fact cannot be reduced by heat only, we shall proceed to enumerate. Of the number, the alkaline metals, potassium, sodium, calcium, and magnesium, decompose water at any temperature and retain their oxygen at any heat, while their oxides form alkalies in all cases.

Aluminum and similar metals retain their oxygen, but do not decompose water except at high heats, and form either alkalies or acids.

Nickel, cobalt, iron, tin, cadmium, zinc, and manganese, decompose water at a red heat, and their oxides form either alkalies or acids, according to the matter present, or their state of oxidation.

Lead, copper, titanium, bismuth, uranium, and tellurium do not form acids at high heats, and do not decompose water at any heat; neither does antimony, chromium, or arsenic, but when oxidized, they form invariably acids at melting heats.

The combinations of oxygen and metal take place in certain definite proportions, and, so far as relates to most of the metals, in various definite quantities. There is only one oxide of aluminum, but there are three of iron, which interest us. The protoxide of iron is a strong alkali, the magnetic oxide a feeble alkali, and the peroxide is more of an acid than an alkali. Peroxide and protoxide of iron, both infusible by themselves, form a fusible slag, or glass. Arsenic forms in all stages of oxidation an acid, which never melts together with another acid, or a highly-oxidized metal. The electro positive or negative character of an oxide is, however, no condition required for its fusibility; for litharge and lime, both strong alkalies, melt together and form slag. But it is always a requisite condition that one of the constituents must be fusible, in which the other is merely suspended. This chemical relation is by no means limited, that is, one and the same substance is not always, nor in all relations, of the same character. The oxides of iron are always alkalies with silex, but they are acids in relation to oxide of lead. Alumina is an alkali in the presence of silex, but an acid when in contact with the alkalies proper. The study of the metallurgist must be directed to these chemical relations, and chiefly also to the degree of fusibility of these compounds, and the relation which they bear to the metal to be produced under their influence. As a rule, we may state that the compounds of single equivalents of metals and oxygen always constitute a base, or alkali, and that any more oxygen destroys that property.

Hydrated Oxides.—The oxides also combine in certain proportions with water, and form definite compounds, called hydrates. These combinations are not only of interest so far as they form the most porous and best kinds of ore, but the tenacity with which water adheres to some of the hydrates is remarkable. Potash, clay, and silex retain their water at an almost red heat, and the first may be actually melted without losing all its water.

The degree of affinity of oxygen for metal is the strongest, and is most difficult to destroy at a medium state of oxidation between the highest and lowest. Protoxide of tin is easily converted into metal, so is peroxide, but the sesquioxide, a combination between, or of, the two, cannot well be reduced to metal without evaporating the largest part of the metal. In practical operations we always endeavour to smelt the highest oxides, and convert the ores into them, in case they are not naturally in that state. The reasons for this are, that in reviving metals from their ores, it is not only the object to remove the oxygen from the metal, but also to produce so high a heat as to melt the metal at the precise moment when the oxygen is removed. If only little oxygen is combined with the metal, it is evident that but little heat is produced; the metal may be in the proper form, but it cannot accumulate into a body, and the least amount of oxygen will oxidize it again. If the quantity of oxygen is large, a proportionate amount of carbon will be consumed, and the heat will be higher than when there is less oxygen with the same amount of metal; the metal will now melt, agglutinate, and in that form resist the influence of oxygen successfully. This law is apparent in most cases when smelting is done on a large scale, but particularly so in smelting refractory metals, —such as iron, manganese, chromium, and others. Lead may be smelted in either form, because the metal is very fusible, but less lead is evaporated in smelting minium than litharge, or galena.

Affinity for Chlorine.—Chlorine has a peculiar tendency to induce metals to crystallize; it causes fluidity and brittleness. The affinity of chlorine for metal surpasses that of oxygen, and drives

out the latter in all instances. It cannot be removed by carbon, but it sometimes may be by hydrogen, as in the case of gold, silver, copper, lead, and mercury. The energetic connection between chlorine and metals would be an impediment to working ore, in which even a small amount of it was present; but all chlorides are extremely volatile and easily driven off. Still there is always an indication of the presence of chlorine in those metals which have been smelted from ores containing it. Chlorine removes all other matter from metals, when the latter are in a state of fusion; carbon, sulphur, phosphorus, and other volatile matter is driven off by it, and, if the heat is continued, the chlorine itself escapes at last with a portion of the metal. This is the case when only a minute amount of it is present. It is therefore one of the most powerful means of purifying metals. Lead smelted from chlorides, or only from a mixture of chlorides and other ore, is always purer than that from oxides or sulphurets. The proper application of chlorides has a most beneficial influence on smelting and refining operations. Zinc does not combine very readily with iron, but if some chlorine is in it when melted, the operation is performed with the greatest ease. Chlorine has a remarkable tendency to combine with metals, and is particularly distinguished for removing oxygen from the peroxides; it therefore purifies the surfaces of melted metal, and causes those in an alloy to unite closely. This is not only the case with different metals, but also with any one in which there is chlorine.

Chlorine is not decomposed by any heat, or other means; it is therefore always present in its pure and proper form, and we may depend upon removing it finally by the continuation of heat only. All metals which have been smelted under the influence of chlorine are remarkably inclined to oxidize so long as it is not entirely removed. It is a harmless substance to the metals; and, as it is a powerful means of fluxing ore and slags, and causing metal to be fluid, its use ought to be more extended than it is at present. So long as volatile substances are combined with a metal, very little or no chlorine escapes; but after sulphur, phosphorus, and similar matter is driven off by it, chlorine itself escapes—first with arsenic, then tin, antimony, mercury, zinc, and iron. We may therefore regulate the refining of metals under the influence of chlorine, according to the volatile character of the substance to be removed; observing due regard to the degree of affinity between chlorine and that substance. Some chlorides escape in their proper form, such as those of arsenic, tin, and antimony; others are decomposed so soon as they are liberated and atmospheric air or steam has access, as chloride of iron, aluminum, and silex, which are converted into oxides and hydrochloric acid. All evaporated chlorides may be recovered by condensation; they are precipitated at a temperature a little higher than that at which steam condenses.

Iodides, bromides, and fluorides, are similar in operation to chlorides; but as they are not so plentifully met with as the latter they are of little interest to the smelter.

Sulphurets.—All metals combine more or less vividly with sulphur, which combination is, in all cases, destroyed by oxygen or chlorine, with the assistance of heat. Sulphurets are formed when sulphur is brought in contact with hot metal, provided no oxygen or chlorine is present. When oxides are heated with sulphur which so far predominates as to absorb all the oxygen in forming sulphurous acid, the remaining sulphur will combine with the metal. When sulphates are heated in the presence of carbon or hydrogen, the oxygen of the sulphuric acid is abstracted, and sulphurets remain. Sulphuretted hydrogen, when conducted over oxides, or over red-hot metal, forms sulphurets. A hot, or fluid metal, which contains only a small amount of chlorine, does not absorb sulphur. The chemical relation of sulphur to metal is similar, in respect to quantity, to that of oxygen; that is, the number and equivalent composition of the sulphurets correspond with the number and equivalent of the oxides of the respective metals. Sulphur causes metals to be more fluid, and brittle when cold, and, in most instances, imparts to them a pasty condition which impairs their ductility when hot. A large quantity of sulphur causes a low degree of fusibility in metals, which is shown most distinctly in the sulphurets of antimony, lead, copper, and iron. This fusibility decreases more rapidly than the evaporation of sulphur. Iron pyrites melt at a very low red heat; but when the quantity of sulphur is reduced by evaporation to half the original quantity, it requires a strong white heat to melt the sulphuret. This fusibility of the sulphurets is in many instances judiciously applied in the formation of a fluid slag. For the removal of sulphur from metals, the presence of free oxygen or chlorine is required; it is therefore of no avail to melt metal which is adulterated with sulphur, under an alkaline slag, because no slag will absorb sulphur from a metal until it has itself been converted into sulphuric acid. Sulphur cannot be removed entirely when carbon, hydrogen, or any reducing agent is present; it requires an oxidizing influence, and a thorough exposure of the metal to oxygen. Sulphurets may be reduced by means of metals which show a stronger affinity for sulphur than those in combination with it. The sulphurets of copper, lead, antimony, and others may be reduced by iron, but we never thus obtain pure metals, the newly-formed metal is either adulterated by the absorbent, or by sulphur. Instead of metals themselves we may employ the oxides, particularly the peroxides, finely powdered and mixed with carbon. Sulphurets of antimony, silver, and bismuth, may be reduced by means of hydrogen, but no other metals.

Phosphurets.—Phosphorus combines readily with most of the metals, and adheres tenaciously to them. The combination is readily formed when phosphates—the form in which it is generally found in the ores—are heated in the presence of carbon; and, as the latter is always used in smelting operations, we may reasonably expect phosphorus in any metal which is smelted in the presence of phosphoric acid, and carbon or hydrogen. Therefore the presence of bones, or bone ashes, in an ore or in a slag, will cause the metal to contain phosphorus. The best means for forming a phosphuret is to heat a phosphate in the presence of carbon. Phosphorus is more easily oxidized than sulphur, and combines in this condition readily with alkalies and alkaline earths; we may therefore by these means remove phosphorus. It also causes metals to be very fusible, more so than any other substance, but disposes them to be brittle when cold.

Carburets.—Carbon has only a feeble affinity for metals, and cannot readily be combined with them. But in most cases the metals when reduced from porous oxides in the presence of an excess

of carbon, absorb some of it, and condense it in their pores. It is doubtful if a chemical combination is formed; still there are indications of legitimate compounds under certain conditions. The best means of forming carburets are the carbonates and oxalates heated in the presence of carbon. The crude iron obtained from the smelting of sparry iron ore may be considered a real carburet of iron. Carbonate of lead, when reduced by means of carbon, forms also a carburet; but this is less distinct than that of iron. In consequence of the faint affinity of carbon for the metals, they are generally very brittle when the amount of it is large. But when a small amount only is mixed mechanically with metal, as is the case in grey cast iron, its strength is not much impaired. The combinations of carbon and metal are more fusible than pure metals; and as carbon is easily removed from metal by oxygen, it is one of the best means to cause metals to be fusible.

See ALLOYS. ATOMIC WEIGHTS. And articles on the various metals.

Books on Metallurgy;—Phillips (J. A.), 'Manual of Metallurgy,' crown 8vo, cloth, 1852. 'Practical Treatise on Metallurgy,' from the last German edition of Professor Kerl's 'Metallurgy,' by W. Crookes and E. Röhrig, 3 vols. 8vo, 1860–70. 'Traité Complet de Metallurgie,' par le Dr. J. Percy, traduit par MM. Petitgand et Ronna, 5 vols. royal, 1864–67. Makin's (G. H.), 'Manual of Metallurgy,' crown 8vo, 1873. Overman's 'Metallurgy,' 8vo, New York.

METER. FR., *Compteur*; GER., *Messapparat*; ITAL., *Misuratore*; SPAN., *Metros*.

Wet Gas Meters.—For many years after the first invention of gas it was impossible to estimate the quantity burnt by the consumer, or passed through any pipe, except by the size and number of the burners and length of time of ignition. These points were therefore made the subject of a contract between the makers and the consumers, but the result was unsatisfactory, it being impossible to check the latter when they burnt more gas than agreed upon in the contract. In order that gas-lighting might become universally adopted in towns, it became necessary that the quantity of gas burnt should be accurately measured.

Solids and liquids can be handled and seen, but gas cannot, and is very light, therefore it is more difficult to measure; besides, a continuous record is necessary. A small gasholder will measure a certain quantity of gas or air with the greatest possible accuracy, but it keeps no record, and could not be used without impeding the flow of gas in the passage from the mains to the burners.

In 1815 the first gas meter was made by S. Clegg. In his specification of that date he describes two different kinds of meter, both worked by the light pressure of the gas as it flows from the mains. One of these meters was excessively complicated in construction, but the other, on a simpler plan, is shown in Fig. 5854. A B is a cylinder or drum, revolving on a hollow axis C, and contained in a case D E. The inlet for the gas is through the hollow axis C, the outlet being at F. The inlet communicates with two semicircular chambers, by means of two bent tubes K, N. The two chambers are separated from each other by two partitions, in which are placed two valves O, P, in order to allow a free passage of the water from one compartment to the other during the revolution of the cylinder, which acts as follows;—In the position of the drum, as shown in the figure, the gas entering through the hollow axis C passes through the bent tube N into the compartment with the valve P, which closes as the partition rises out of the water. The gas in the same compartment under the valve O escapes through the hole S into the case, and passes away to the burners through the outlet F. The gas cannot pass through the bent tube K, as the small trough above it has taken up a little water, and at the same time that the outlet-hole T rises above the liquid the little trough discharges its water into the pipe K, which is thus sealed. As soon as the valve O enters the water the gas in the compartment G is discharged through the hole T into the case; thus one compartment is always filling and another always emptying. The quantity of gas required to fill each compartment varies with the size of the drum, and this being correctly determined it is easy to record the number of revolutions made by the drum by means of a suitable train of wheelwork attached to the hollow spindle.

5854.

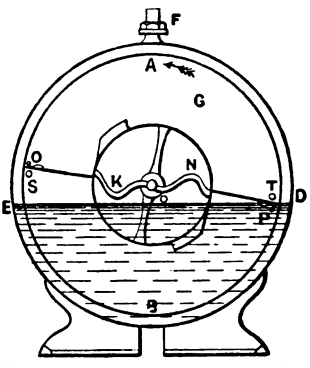

One defect of this machine was the friction of the stuffing box supporting the hollow axis; another that the valves O, P, soon got out of order. The sudden sealing of the tubes by the water falling from the small troughs caused oscillation in the lights; but with all its faults this early meter places the name of Samuel Clegg among the first who contributed to the advancement of the science of gas-lighting.

In the year 1824 Sir William Congreve invented a meter, in which he registered the flow of gas through a pipe or cock where the pressure is uniform, by registering the length of time the tap was open. For this purpose he applied to each cock or pipe a small clock movement, which was started by opening the cock, and stopped by shutting it. The dial indicated the number of hours the cock was open. This inferential measurement was far superior to the old contract system, but did not prove an accurate measurer of the quantity of gas burnt.

Figs. 5855, 5856, show the interior of John Malam's meter, which consisted, like Clegg's, of a drum revolving upon an axis in an outer case. The axis, instead of being hollow and working at one end through a stuffing box, is mounted, as shown in Fig. 5856. The gas entering at A, passes through the bent tube A B, into the measuring drum. This drum is divided into compartments, each having an inlet space in its inner side and an outlet opening on its periphery. The inlet to the compartment D E, Fig. 5855, is at G, and the outlet at M. The inlet and outlet to the compartment C E are respectively at L and N, and to the compartment C D at F and K. The gas, entering by the pipe A B, passes through G into that portion of the compartment D E which is above the water, and acts like a wedge, pressing against D so as to drive the drum round in the

direction of the arrow. While this is being done the gas in that part of the compartment C D which is above the water is expelled at the outlet K, and escapes by the outlet-pipe of the meter. The quantity of gas required to force the drum to make a complete revolution being accurately ascertained, the number of revolutions is indicated by the usual train of wheelwork and dials, and the quantity of gas passing thus registered.

5855.

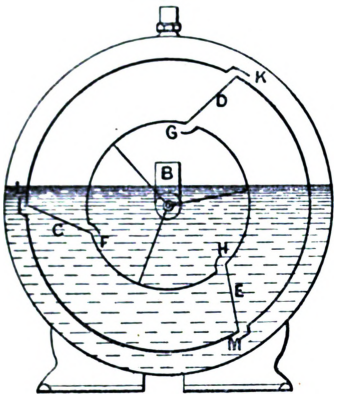

5856.

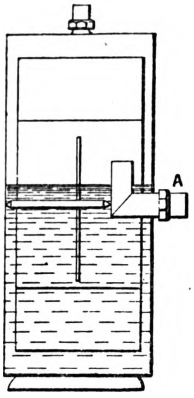

5857.

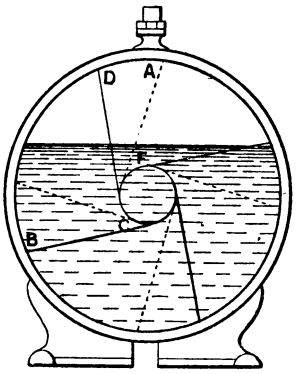

Samuel Crosley further improved Clegg's meter. A front view of the drum of Crosley's meter is shown in Fig. 5857, but without the hollow cover which enclosed this part. Fig. 5858 is a plan of the drum, with that part of the body removed which covers one of the compartments; the hollow cover is shown at D D. Fig. 5859 is a section showing the four interior partitions. The principle is the same in this drum as in that of Malam. The drum is divided into compartments, the partitions of which are, however, not at right angles with the front and back plates of the drum, but are placed at an angle as represented in Fig. 5859. By this modification the drum in revolving cuts the water, instead of allowing the flat sides of the partitions to beat against the liquid. There is therefore much less resistance to the drum in its passage through the water; it revolves with greater freedom, and the resistance is at all times equal, which is absolutely necessary, or the lights would burn unsteadily. There is also space in the centre of the drum for the free passage of the water from one compartment to another. The inlet and outlet spaces were placed by Crosley, the

5858.

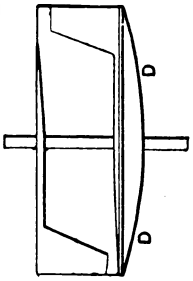

5859.

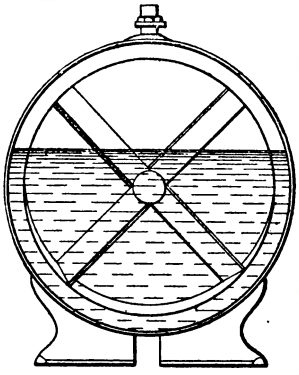

5860.

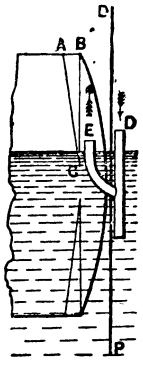

one in front of the drum under the hollow cover, and the other at the back of the drum. These have to be so arranged that there is no free passage through the meter without moving it. The spaces are therefore arranged as in Fig. 5857, in which the radial lines D, C, F, G, and others, show the position of the slits through which the gas passes to the compartments behind. The slits are shown in section at A, B, C, Fig. 5860. The gas is introduced into these four inlet passages to the compartments by means of the bent tube or spout E D, Fig. 5860. The water-level must always be above the hole in the hollow cover through which the bent tube is passed, otherwise gas would pass through the meter without moving it. The drum is now universally in use in wet meters, although in other parts of the machine there are many variations in detail, intended principally to regulate the height of the water-level, on which the whole accuracy of the instrument depends. The drum is difficult to draw and explain in section, as all the plates in it vary much in their planes, and are placed diagonally in respect to each other. But the drums are simple in construction, and cut the water smoothly. Their sizes are calculated according to the number of lights the finished meters are intended to supply. In the trade the meters are named according to the number of burners they are intended to feed; thus they are designated five-light meters, or ten-light meters, and so on. The lights thus alluded to are always understood to be those produced by burners which each pass 6 cub. ft. of gas an hour; thus a ten-light meter will supply ten burners, each consuming 6 ft. of gas an hour, or twenty burners each consuming only 3 cub. ft. an hour. The smaller-sized

meters are made to pass the required quantity of gas with about 150 revolutions an hour, but the larger ones decrease in the number of revolutions as they increase in size.

The accuracy of registration of the meter depends principally upon the height of the water-line. Fig. 5859 shows that when the water-line is high it passes less gas a revolution, but when it is low more gas. The index can only show the number of revolutions of the drum, but not whether the drum holds the proper proportions of water and gas. It therefore becomes a matter of great importance to gas manufacturers and consumers that the water in the meter should be kept at the proper level. The arrangement adopted by Crosley, also by William Parkinson, and by others, is shown in Fig. 5861.

In fact all the more recent modifications in the wet meter include the drum already described, but vary in the plan adopted to keep the water at the true level. In Crosley's arrangement, in front of the cylindrical case containing the drum is fixed a square box, A B C D, Fig. 5861. The gas enters at F, and passes into the square frame at the corner A. In this corner of the square frame is fixed a valve F, through which the gas passes. Below the water-line there is an opening from this square frame into the drum case behind, so that the water finds the same level in both. The valve F is worked by a float G below it. This is balanced so that when, by evaporation or otherwise, the water-level falls below a given point, the float shuts the valve and cuts off the gas. Of course, then, the lights go out, and more water must be put in the meter. The gas fills the upper part of the square frame, then passes down the pipe H, and through a branch from it into the drum, Fig. 5860, where the line O P represents the partition between the drum case and the square frame.

5861.

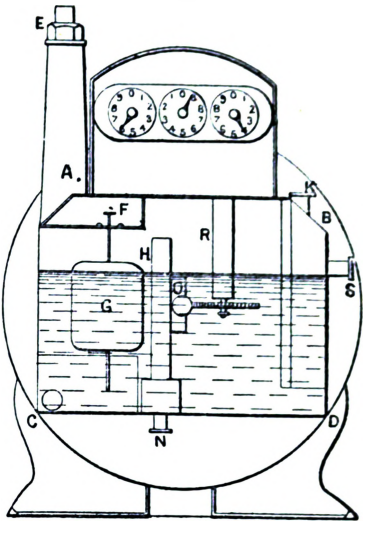

The plug K, Fig. 5861, opens to allow water to be put in the meter, whilst the plug N opens to draw off any water that may rise above H. This diagram shows the connection between the drum-shaft and the registering index. On the end of the drum-shaft is placed a worm O, working into a cog-wheel P, which, by means of a spindle through the tube R, turns the index at the top. In a three-light meter the measuring drum revolves eight times to a cubic foot, the wheel on the spindle has forty teeth, consequently the latter makes one revolution for every 5 ft. of gas passed. A worm on the top of the spindle works into a wheel of twenty teeth, which consequently revolves once with every 100 cub. ft., on this there is a pinion of six working into a wheel of sixty teeth, and to the axle of this wheel is fixed the first hand on the dials, which consequently makes a complete revolution for every 1000 ft of gas passed through the meter. The side plug S is for adjusting the correct water-line of the meter, and when the water in the meter is higher than this plug the instrument registers against the consumer, but when below it is in his favour. To get the right level the meter should first be filled with water, and then the plug S opened till no more water will run out through it, when the water-line will be the true one.

The defect of this meter is the power it places in the hands of unprincipled people to tamper with it by altering the water-level. This has been done by introducing the short end of a siphon into the plug K, and drawing off some of the water. Nevertheless both gas manufacturers and consumers had full power over the plug S, which tells the truth of the case, so the gas companies found it necessary to appoint inspectors to go round frequently and examine the state of the meters.

In 1853 J. Z. Kay introduced a hydraulic valve meter, in which he dispensed with the ordinary float and valve already described, and substituted a hydraulic seal. This was placed on the back of the meter—which otherwise was of Crosley's construction. When the water had evaporated low enough to unseal a pipe at the back, gas was thereby admitted into a chamber in which water was held in suspension; accordingly sufficient water would flow out to bring that in the working part of the meter to its proper level.

It fixed the standard cubic foot for gas measurement, which previously was a variable bulk. It was accordingly settled that a cubic foot of water should equal 62·321 lbs. of distilled or rain water, weighed in air at a temperature of 62° Fahr., under a barometric pressure of 30 in.

A clause in the Sale of Gas Act orders that a meter shall be tested for capacity at $\frac{5}{10}$ the pressure whilst passing gas at the rate per hour stated thereon as its proper working speed, and if such meter can be made to vary more than 2 per cent. fast, or against the consumer, or more than 3 per cent. slow, or against the gas company, who consequently have the worst of the bargain, it shall not be stamped. The meter shown in Fig. 5861 could only comply with these requirements on two conditions—namely, first, that when the water-level was raised high enough for the meter to register 2 per cent. fast, it should overflow the pipe H; secondly, that if the water evaporated so as to register 3 per cent. slow, the float G should fall and close the valve. It was, however, found in practice that when the overflow pipe H and the float G was so adjusted, variations in pressure caused water very frequently to flow out of the meter through H to the annoyance of the consumer. The valve F was also liable to be closed. It was found that meters so adjusted worked well in low districts where there was little pressure, but badly in high districts with high pressure.

To meet this difficulty Pinchbeck devised a simple improvement, shown in Figs. 5862, 5863. The gas passes through the valve, as in Fig. 5861, but instead of filling the front chamber passes into the pipe A B, through the inner pipe G D into the waste-water box E F, then through the pipe F into the measuring drum. The improvement consists in reversing the action of the float, so that it

is raised instead of depressed by an increase of pressure. When the water-level in the meter oscillates through variation of pressure, very little gets into the waste chamber, as it has to pass through a small hole K at the bottom of the pipe A B. This meter fulfils all the requirements of the Act, and can be used in any situation and at any pressure. For many years meters have been constructed on this principle, and in large numbers, by W. Parkinson and Co., of London.

Wet meters, as at present sold, may be divided into three classes—the bird fountain, the mechanical spoon, and the compensating float. Crosley's bird-fountain meter was the first one. In 1858 Esson introduced a bird-fountain meter, shown in Figs. 5864, 5865. A is the front chamber, and B the waste box. D is the water-reservoir or supply-tank. This is supplied with water by means of the feed-pipe E, which is kept constantly sealed by the water in the surrounding closed pipe F. A sufficient opening is left at the top of the pipe F to allow water poured in at E to flow over the edge of the pipe F into th supply-tank D. An air-pipe G connects the front chambe. of the meter with the supply-tank. H is a pipe conveying water when necessary from the tank D into the front chamber A of the meter, to make up for loss by evaporation. The tank D is made air-tight, so no water can flow down H until air or gas enters the tank. When the water falls below its proper level, and below the lower mouth of the pipe G, gas will find its way up the pipe into the tank D, at the same time allowing water to fall through H to raise the water in the meter to its proper level again, and close the pipe G. The float K is fastened to the valve by a bent arm, and the gas enters the meter and passes through the valve and the meter the same as in Fig. 5861.

5862.

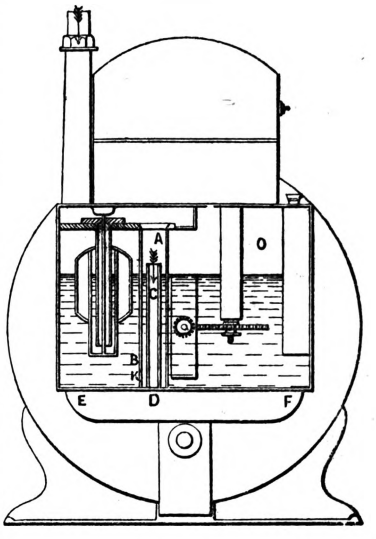

In 1855 Saunders and Donovan invented a meter, which is thus described in their specification;—We employ a

5863.

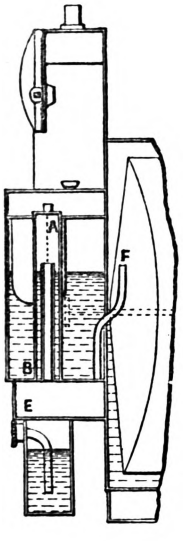

5864.

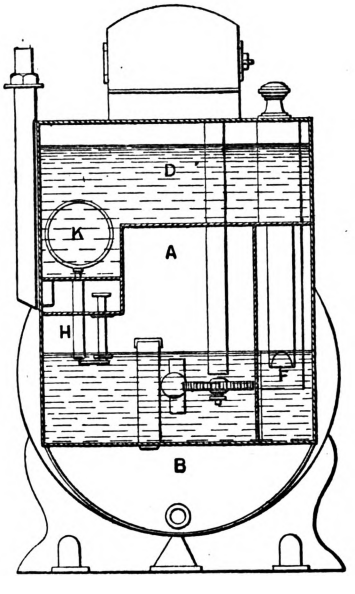

5865

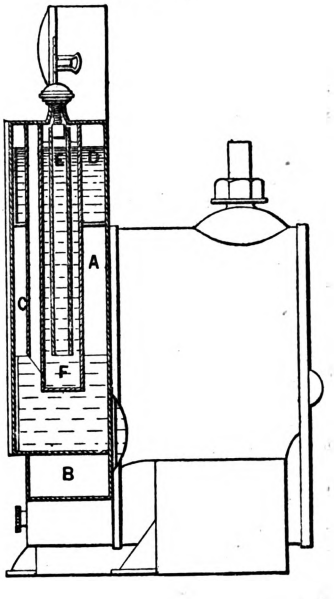

float of such weight in proportion to its volume, or otherwise so loaded and balanced, that it is capable of remaining stationary or in equilibrium whether a greater or lesser portion of it be immersed in the liquid, provided the level of the liquid remain the same. If, however, the level be raised by the addition of a certain volume of liquid, the float rises until a corresponding volume of the float has emerged from the liquid, and the level of the water has fallen to its proper place. If, on the other hand, the level be lowered by withdrawing a certain volume of liquid, a corresponding volume of the float becomes immersed and the level is again restored. One mode of arranging the apparatus consists in constructing the float of a semi-cylindrical or hemispherical form, turning upon a horizontal axis, mounted at or near the level of the liquid in the meter. If the float be made of half the weight of an equal volume of the liquid, or thereabouts, or if it be loaded or balanced to a corresponding amount, it will produce the desired effect; for when the float is in its highest position, with its flat side or diameter horizontal, it will balance itself on the axis; when the first quarter is immersed it will float up the second quarter, while the third and fourth quarters balance each other on the axis; and when the diameter is vertical, one half will be immersed and

will float up the other half. In Fig. 5866, A B C is the compensating float working on the axis D. To this float is attached the valve E, which closes the passage for the gas into the meter when the float reaches or approaches its lowest position. The dotted lines show the position of the float when the valve is closed. This compensation is very accurate in its action. Meters upon this principle are manufactured by the Gas Meter Company, at their works, London, and elsewhere.

5866.

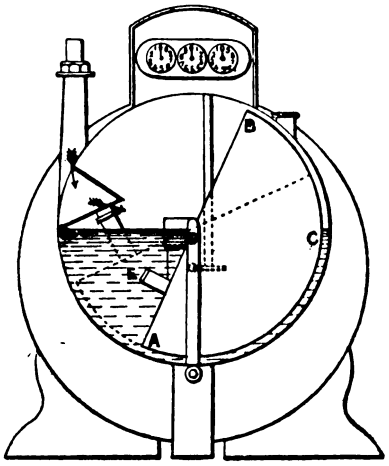

5867.

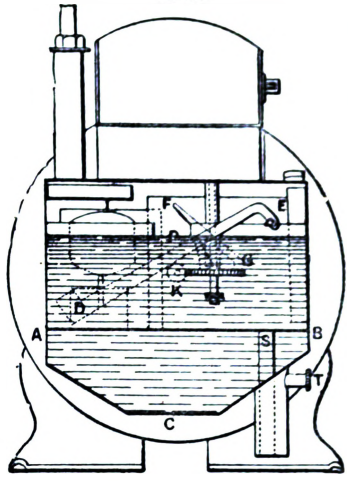

Another description of compensating meter is shown in Fig. 5867. In this there is a waste-water chamber of larger size than in other meters, and a spoon is made to rise and fall with the rotation of the drum, thus raising each time a small supply of water to take the place of that evaporated from the measuring part of the meter. All water thus raised, however, is not required for the purpose, and the surplus returns into the waste-water box through an opening at the proper level. In Fig. 5867, A B C is the waste-water chamber, and D E the spoon for raising the liquid out of it. The spoon is raised by means of the cam F G connected to the upright spindle working between the worm K on the shaft and the index. The lip P in the partition plate is the true water-line, and any excess of water in the meter which runs over this into the waste chamber A B C can be drawn off at the plug T. The gas enters the meter, passes into the measuring drum, and the index records the quantity consumed as usual. The water-level is always truly kept, and although the additional work given to the meter to perform theoretically adds to the friction, the effect is so small that it cannot be detected upon the lights or on the most delicate gauge.

Other methods of compensation have been suggested, but not largely adopted.

In all the wet meters it will be noticed that the original drum of Crosley has been retained, all the recent modifications being limited to the regulation of the water-level. The outer cases of wet meters are chiefly made of tin plate, which in some situations corrodes, although there are many instances of such meters working well continuously without repairs for twenty years. The liability to corrosion has induced many makers to manufacture meters in cast-iron cases. These, owing to improved modern methods of casting, can now be made so light that, while the durability of the meter is very greatly increased, there is little inconvenience on account of the weight.

Wet gas meters are sometimes made on a large scale, for the use of the gas companies at the works, and are then called station meters. Two station meters manufactured by Parkinson and Co., and fixed at the London Gas Works, Nine Elms, had a measuring drum each on Crosley's principle, which measures at each revolution 1000 cub. ft. of gas. The shaft in its centre is 6 in. in diameter. The drum is made of the best tin plate, each plate being riveted and soldered, and the whole built on a strong framework of cast-iron bosses, wrought-iron hoops, and angle-iron. Although the weight of this measuring drum is $3\frac{1}{2}$ tons, so delicately is it balanced, and so accurately made, that a pressure equal to a column of water $\frac{1}{10}$ in. high will cause it to move. Each meter is 16 ft. square, and weighs, without the measuring drum and interior work, about 24 tons. The whole complete and charged with water weighs about 100 tons. At a speed of 100 revolutions an hour these meters measure about 5,000,000 cub. ft. of gas a day. The inlet and outlet connections are 27 in. in diameter. The first hand of the index registers 1000 cub. ft. a revolution, and there are dials recording up to 10,000,000. In the centre of the index a contrivance called the tell-tale is fixed; it carries a disc with a circular card attached, which is made to rotate by the wheel-work. The minute hand of a clock fixed above the card carries a lever with a pencil fixed in the lower end, so that as the card revolves the rising and falling pencil makes marks upon it. By reference to this card it can always be seen what quantity of gas has been passed through the meter in each hour. It is usual at the gas-works to take the position of the index of the meter at very short intervals, in order to see that the making of gas is proceeding properly; but if this duty should be neglected a glance at the card would give warning. There is also placed in front of the meter an overflow arrangement to prevent too much water from being put into it, and two gauges to denote the pressure, so that the state of the meter can be seen at a glance.

Certain defects in wet meters, more especially their liability to complete stoppage by frost, led to the construction and trial of the dry meter, in which, as its name implies, water is not used, but which has its own peculiar merits and faults.

In 1820 John Malam invented the first dry meter. It consisted of six bellows fitted into a case, each communicating with a hollow shaft, the gas being admitted in succession into each compartment by valves. This bellows action, governed by suitable valves, is the principle of all dry meters. The quantity of gas necessary to move the apparatus, so as to give one complete revolution to the shaft, being accurately ascertained, the capacity of the chambers is altered by a regulator till the shaft attached to the index causes the latter to indicate correctly.

Malam's first dry meter, and several by other inventors which followed it, did not give satisfactory results. Of these, that by Sullivan, though never brought commercially into use, was founded on right principles. He divided the external chamber internally into two equal parts, which were each again divided by a flexible diaphragm or piston made of oiled silk, strengthened and protected at their centres by plates of metal. The gas is alternately introduced, by means of a sliding valve into one side of the diaphragm or the other. The oscillatory movement of the diaphragms works arms connected with an axis, and the motion is thence communicated to an index, through suitable arms, rods, and a crank wire. The flexible pistons should be so set in respect to each other that they shall not arrive at the end of their movement at the same time, but that one shall be in full action at the time that the other comes to the end of the stroke.

The earliest successful dry meter, and one largely in use at the present day, is that first made in 1842 by Defries and Taylor, working upon the same principles as the respiratory organs of the human body, by substituting diaphragms of leather for the lungs, and making them register their motion. Fig. 5868 is of N. Defries' first model of the flexible diaphragms, and represents a tin cylinder, closed at the bottom, and three radial partitions of tin, A, B, B, B, dividing the cylinder into three great fixed parts. Three flexible partitions of leather are shown in different positions by the dotted lines cut, whilst the fixed edges of the diaphragms are shown by the triangle. These leather partitions have a bellows movement, and when pressed inwards or outwards as far as they will go, assume the shape of a pyramid. With the flexible partitions the meter is thus divided into six chambers. The gas is allowed to enter all the different chambers in turn by a rotary valve of ingenious contrivance, so that when the chamber is expanded the gas is cut off from it, and allowed to pass into the chamber on the other side of the flexible partition, thus forcing the gas

5868.

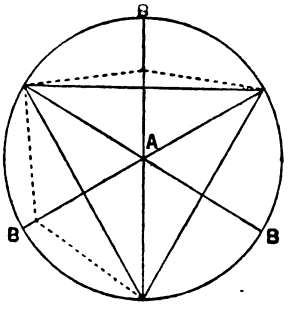

5869.

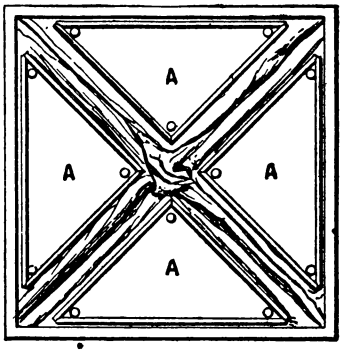

out of the full chamber which has measured it into the delivery pipe. In this way all the chambers are filled and emptied in rotation, and the motion of the flexible partitions is communicated to the index, which thus is made to show the quantity of gas passing. The meter thus consists of three principal parts—the movable diaphragms, the valve, and the index.

As this meter is at present made by N. Defries and Co., of London, each leather diaphragm is first blocked into the shape of a pyramid, so as to allow of its having free angular motion. Each of the four triangular divisions thus made in the leather is covered with tin to protect and strengthen it, the only part of the leather left uncovered being that which is to act the part of a hinge, and therefore must be flexible. Fig. 5869 shows the diaphragm, with the triangular divisions A, A, A, A. All the diaphragms are steeped in oil for forty-eight hours, so as to make them perfectly flexible and gas-tight. A knuckle connects the four triangular pieces of metal to an upright shaft, which, in its turn, assists to move the valve and index.

The valve, which is rotary, is so constructed that the inlet-pipe passes down through its centre into a little chamber below the valve, whence it is permitted to pass through the valve into the different working chambers in turn. This valve, Figs. 5870, 5871, is coated with leather well oiled; this sweeps off any dirt which might otherwise interfere with its good action. The valve cannot lift so as to allow the gas to pass without being registered, and, being enclosed in a box, the gas cannot pass into the upper chamber of the meter, so as to exercise an injurious action on the gearing.

5870. 5871.

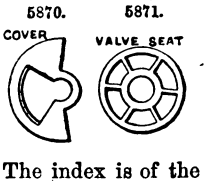

Fig. 5872 is a sectional diagram of the finished meter. The valve and its box, it will be seen, are enclosed in an upper chamber called the gallery. The index is of the usual tell-tale character, with decimal motion, and the action of the whole meter is regulated by a tangent-screw in the gallery, which lessens or increases the play of the movable diaphragms.

Another dry meter, now largely used, is founded upon an arrangement devised by Croll and Richards in 1844. Figs. 5873, 5874, show its internal parts. A A A A is a rectangular case divided into two equal parts by the partition B B. In each of these compartments there is a metal disc C C, each of which is connected to the central partition by a bellows ring of leather D D. Each side of the leather is firmly attached to a metal ring, in order that the whole may be completely air-tight.

The gas is admitted alternately to the interior and exterior of these diaphragms, by means of slide-valves placed in the compartment E E above. A plan of this compartment is shown in Fig. 5875,

5872.

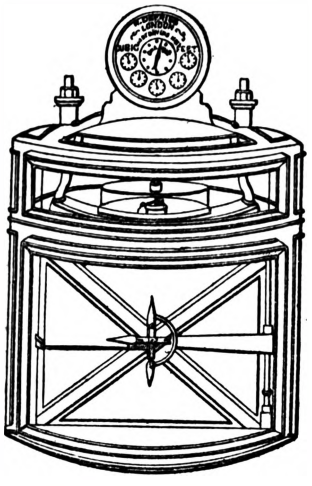

5873.

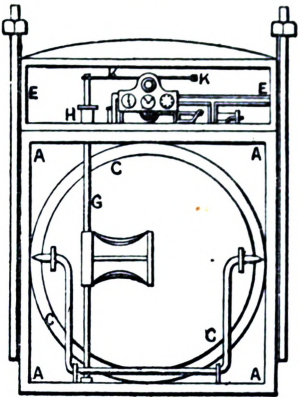

5874.

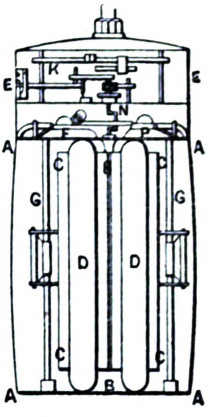

in which F, F, are the two slide-valves, with passages beneath communicating with the partitions below. The discs give motion to the two rods G, G, which pass through the stuffing boxes H. These rods, by means of the levers K, K, give motion to the crank N, to which the slide-valves are attached. The valves being properly set, the gas alternately fills each chamber, and as each disc reaches its limits of expansion or contraction the valves reverse the action, and so continuous motion is kept up. In this meter the leather has hardly anything to do with the measurement, and the capacity of each compartment can be calculated with great accuracy, by multiplying the area of the disc by the distance it has to travel. This meter is manufactured chiefly by the Gas Meter Company.

5875.

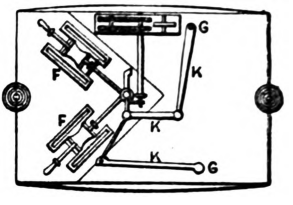

In the manufacture of the Defries' meters, they are tested for accuracy of measurement by means of gasometers. The gasometers are constructed to hold a certain amount of gas, from 10 ft. to 20 ft. of which is allowed to pass through each meter and then burnt. If the index on the meter shows the passage of exactly the amount of gas passed out of the gasometer, the meter registers correctly. If it does not the regulating tangent-screw is adjusted till accuracy is obtained. When this is the case the index is firmly fixed in its place, badges and labels are placed on the meter, which is then sent to the Government office to be tested and certificated under the Sales of Gas Act, after which it is japanned and made ready for sale. Every meter before leaving the works is tested under a pressure of 20 in. of gas, which pumps it, and proves that all its parts are sound.

Water Meters.—When water is supplied in large quantities, as in irrigation works, it is usually measured by being passed through modules similar to those described in p. 2151. For measuring water in comparatively smaller quantities a meter is necessary.

The requisites of a good high-pressure water meter are;—First. It should register with sufficient accuracy for all practical purposes the quantity of water delivered at all the various degrees of pressure and rates of delivery.

Second. It should not destroy the onward pressure of the water. It should be capable of being fixed at the entrance of premises, so that it and all the pipes outside should be under the control of the water company, and all pipes within the premises under the control of the consumer. The company by this means secure payment for all water supplied, and the consumer has the risk of all waste; inasmuch as he pays for all the water that comes into his premises, he can make any number of connections convenient to himself without doing injustice to the company.

Third. It should be compact and adaptable to every situation.

Fourth. It should be simple and durable to the extent, as a rule, of not requiring repairs for a term of four or five years.

Fifth. It should be sufficiently low-priced, so as to place it within the reach of all classes of consumers.

These requisites are very well obtained in the meters invented by Joseph Adamson and C. W. Siemens, manufactured by Guest and Chrimes of Rotherham.

Fig. 5876 is a vertical section, and Fig. 5877 is a perspective view, of the measuring drum of Adamson and Siemens' water meter. The water enters the case A at the inlet C, and passes through a grating or wire gauze D, and through the neck or pipe E into the wheel B. Leakage between the pipe E and the wheel B is greatly diminished by making the upper part of the wheel with internal flanges *b*, *b*, which are not fitted tightly to the pipe E, but are just large enough to run freely round it. Any fluid which passes between the first collar and the pipe E forms eddies between the collars, and is thus prevented from escaping freely. F is the spindle of the wheel; it is furnished with a small steel thimble *f*, which rests on a pivot *g* fixed in the stud or pillar G,

fixed in the bottom of the case A; the pivot *g* is round at the top, and it is smaller than the thimble *f*, which can thus revolve or spin upon the pivot with very little friction. M is the outlet for the

5877.

5876.

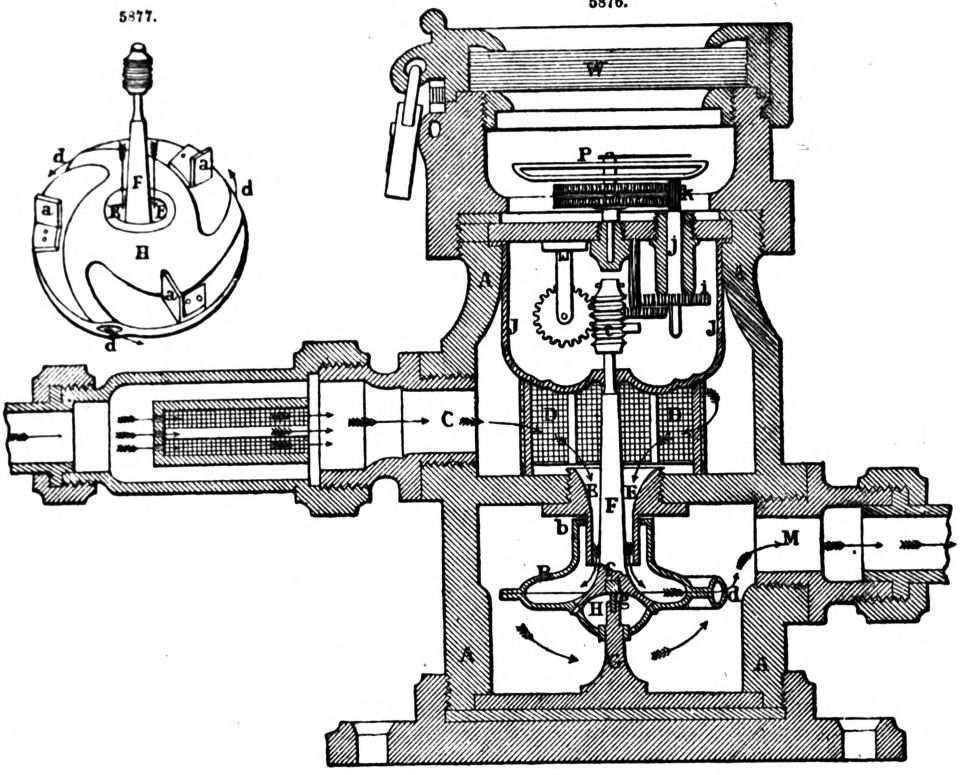

measured water; H is an oil-cup, the bottom of which is turned up so as to approach very near to the top of the pivot, and has a central opening, which fits as close as possible to the upper part of the stud G, but turns freely around it. Any water which may leak into this oil-cup falls to the bottom or is thrown outward to its largest diameter by centrifugal force, and in either case it does not reach the pivot, but merely forces the oil up to it. The object of this arrangement is to prevent friction between the stud G and the oil-chamber, by keeping the wheel in its proper position by the thimble and pivot, while at the same time a small lateral motion is allowed, to enable the wheel to revolve on its true axis of gyration.

The wheel or revolving part B is made with two hollow arms, terminating in jets *d*, *d*, of a conical form, or of the form of the contracted vein. The wheel B is sometimes made in two parts, which are stamped to the required form and size, and furnished with flanges, which are joined on the horizontal line. Upon the wheel are placed vanes *a*, *a*, which present a considerable resistance to its motion. This resistance tends to equalize the indications of the meter for equal quantities of fluid passed through at different velocities. The wheel, or revolving part of the meter, and the case are so arranged that the wheel is submerged and surrounded by the fluid which is being measured. The spindle F is connected through the endless screw *t* and a train of wheels and endless screws contained in an oil-chamber J to a counter. The motion is thus reduced to the wheel *i*, whose spindle *j* passes through a cupped leather collar in the top of the case, and carries a pinion *k*, which drives the wheels turning the pointer P; W is a glass to protect the face of the index. These meters are in the first instance adjusted or graduated experimentally by passing a certain quantity of water through them at different velocities. The vanes are more or less bent, or portions are removed when necessary. The number of revolutions performed by the wheel in passing a certain quantity of water being ascertained, the wheels of the counter are proportioned, so that the pointers and dials may indicate gallons, cubic feet, or other units of volume. Any number of meters may then be made of the same pattern and dimensions, and they will all indicate alike, or nearly so. Each one may be adjusted by varying the vanes or resistance to the wheel, or they may be used without adjustment, and their indications corrected by adding or subtracting their ascertained percentage of error.

METRIC SYSTEM.

By the metric system is meant the arrangement of weights and measures as used in France, and it is called metric because all the measures and weights have the French mètre for their basis.

The metric system comprises six kinds of measures, each kind having its particular unit and a certain number of multiples and sub-multiples of that unit.

The units of measure are;—

The mètre,	for the measure of	length.		The stère,	for the measure of	solidity.	
,, are,	,,	,,	surface.	,, gramme,	,,	,,	weight.
,, litre,	,,	,,	capacity.	,, franc,		,,	money.

Besides these, there are still the square mètre and the cubic mètre, which are used to measure surfaces and volumes in general.

In each measure the higher denominations are derived from the unit by multiplication by ten, or some power of ten; the lower denominations are obtained by dividing the unit by ten, or some power of ten. All the larger measures or multiple measures therefore contain the unit a number of times, which is represented by some power of ten; similarly, all the less or sub-multiple measures are, if the unit of measure be represented by 1, powers of $\frac{1}{10}$.

Since the number ten is the only one employed to multiply and divide the units of measure the system is called a decimal system.

The multiples are designated by the Greek words;—Déca, signifying 10; Hecto, 100; Kilo, 1000; Myria, 10,000.

The sub-multiples by the Latin words, Déci, which signifies $\frac{1}{10} = 0\ 1$; Centi, $\frac{1}{100} = 0{\cdot}01$; Milli, $\frac{1}{1000} = 0{\cdot}001$.

These terms are prefixed to the names of the units, thus;—

The décalitre is a measure of 10 litres; the hectogramme is a weight of 100 grammes; the kilomètre is a measure of 1000 mètres; the décilitre is the tenth part of a litre; the centigramme is the hundredth part of a gramme; the millimètre is the thousandth part of a mètre.

Only the mètre and gramme have all the multiples; the other units offer a series of multiples and sub-multiples more or less incomplete, as may be seen in the following Table;—

GENERAL TABLE OF THE METRIC SYSTEM

	Length.	Surface.	Capacity.	Solidity.	Weight.	
	Mètre	Are	Litre	Stère	Gramme	(*Unit*) = 1·
Déca	mètre	..	litre	stère	gramme	= 10
Hecto	mètre	are	litre	..	gramme	= 100·
Kilo	mètre	..	litre	..	gramme	= 1000
Myria	mètre	..	..	..	gramme	= 10000·
Déci	mètre	..	litre	stère	gramme	= 0·1
Centi	mètre	are	litre	..	gramme	= 0·01
Milli	mètre	..	litre	..	gramme	= 0·001

Measures of Length.—The mètre is the base of the metric system, and the unit of the measures of length.

It is equal to the ten-millionth part of the quarter of the terrestrial meridian; that is to say, of the distance between the equator and the poles.

The earth being a sphere, all the meridians are circles, the circumference of which is divided into 360 equal parts, called degrees. The quarter of a meridian, or the distance between the poles and the equator, is therefore 90°. To ascertain this distance, it has only been necessary to determine exactly the length of one or more degrees, and this was done by measuring the part of the meridian comprised between Dunkerque and Barcelona, passing through Amiens, Paris, and Carcasonne.

The mètre is divided into ten equal parts, or décimètres; each of the latter into ten equal parts, or centimètres; and these again into ten equal parts, called millimètres.

The multiples of the mètre are;—The décamètre = 10 mètres; the hectomètre = 100 mètres; the kilomètre = 1000 mètres; the myriamètre = 10,000 mètres.

The sub-multiples are;—The décimètre = the 10th of a mètre; the centimètre = 100th of a mètre; the millimètre = 1000th of a mètre.

After having measured a length, if we find it to contain 4 décimètres and 5 centimètres, we should read it, 45 centimètres, and reduce it to the mètre thus;—$0^{m}{\cdot}45$, or $0{\cdot}45$ mètre. If we had to write 1 décimètre and 5 millimètres, we should read it 105 millimètres, and reduce it to the mètre thus; $0^{m}{\cdot}105$, or $0{\cdot}105$ mètre.

If we reduce 4 décamètres 8 mètres 5 centimètres to the mètre, we should call it 48 mètres 5 centimètres, and write it $48^{m}{\cdot}05$, or $48{\cdot}05$ mètres.

This same sum reduced to the décimètre, would be written 480·5 décimètres; the centimètre, 4805 centimètres; and the millimètre, 48,050 millimètres.

Reduced to the décamètre, would be written $4{\cdot}805$ décamètres; the hectomètre, $0{\cdot}4805$ hectomètres; and the kilomètre, $0{\cdot}04805$ kilomètre, or 4805 centimètres.

We may reduce in the same manner any measure by a glance at the general Table. Take, for example, 4239 kilomètres to be reduced into centimètres. We see that the kilomètre contains 100,000 centimètres, it is therefore simply necessary to add five ciphers to the 4239 kilomètres, which will be read 423,900,000 centimètres.

Thus, in order to reduce a number of one denomination to any other denomination, it is sufficient to remove the decimal point to the right or left, as many places as it is required, and give the name of the new unity, adding ciphers when it is necessary.

The facility with which these operations are performed, shows at once the advantages to be gained from uniformity in the method of forming multiples and sub-multiples of the unit. This advantage is exemplified more fully in the rules known as addition, subtraction, multiplication, and division, where the operations in each case are perfectly simple, no such difficulties as those involved in the compound rules of English money, weights, and measures being known in the metric system.

Measures of Surface.—The square mètre, which is the principal unit of superficial measure, is a square of which each side is 1 mètre in length.

The square décimètre, the square centimètre, and the square millimètre, are squares of which each side is a décimètre, a centimètre, and a millimètre in length respectively.

The square mètre contains 100 square décimètres = 10,000 square centimètres = 1,000,000 square millimètres.

The square mètre, and its sub-multiples, are employed in measuring small surfaces, as those of walls, floorings, sheets of pasteboard, glass, paper, and so on.

If we had a surface expressed in square measure, and represented by a decimal number such as 11·247805 square mètres, we should read it 11 square mètres, 24 square décimètres, 78 square centimètres, and 5 square millimètres.

If we reduce the above numbers to square décimètres, we should write 1124·7805 square décimètres, which we should read as 1124 square décimètres, 78 square centimètres, and 5 square millimètres.

The are is the unit of agrarian measures, and are used to measure the area of fields, woods, meadows, and of all landed property.

This measure is the surface of a square of which each side is 1 décamètre in length, and therefore contains 100 square mètres.

The only multiple of the are is the hectare, which contains 100 ares.

The only sub-multiple is the centiare, which is the hundredth part of an are.

The sides of the hectare, of the are, and of the centiare, decrease by ten, and their surfaces by hundred; these measures are compared thus;—The hectare to the square hectomètre containing 10,000 square mètres; the are to the square décamètre containing 100 square mètres; the centiare to the square mètre containing 1 square mètre.

The following numbers expressed in square mètres 2479654, reduced to the hectare, would be written 247·9654 hectares, and would be read 247 hectares, 96 ares, 54 centiares.

Measures of Volume.—The measures of volume are divided into three classes;—

The measure of capacity, used to determine the volume of liquids, such as wine, oil, brandy; and of dry divided matter, such as wheat, meal, or barley; and the unit of this measure is the litre.

The measure of solidity, properly so called, used to measure masonry, the volume of timber, the capacity of docks. The cubic mètre is the principal unit for this purpose.

The measure of solidity for firewood, and like material, of which the stère is the unit.

The litre, which is the unit of the measure of capacity, is equal to the cubic décimètre; that is to say, it contains as much as a hollow cube, of which the side is a décimètre. The litre is not, however, employed in the cubic form.

Of this measure there are two kinds;—The one which is used to measure liquids is made of pewter, and its height is double its diameter. The other, used to measure dry matter, is made of wood of cylindrical shape, and the height is equal to the diameter.

The multiples of the litre are;—The décalitre = 10 litres, or 10 cubic décimètres; the hectolitre = 100 litres, or 100 cubic decimètres; the kilolitre = 1000 litres, or 1000 cubic décimètres.

The sub-multiples are;—The décilitre, 10th part of the litre, 100 cubic centimètres; the centilitre, 100th part of the litre, 10 cubic centimètres; the millilitre, 1000th part of the litre, 1 cubic centimètre. The millilitre is seldom used.

The cubic mètre, the cubic décimètre, the cubic centimètre, the cubic millimètre, are cubes of which the six square faces are a mètre, décimètre, a centimètre or a millimètre square.

A cubic mètre contains 1000 cubic décimètres, 1,000,000 cubic centimètres, and 1,000,000,000 cubic millimètres. It has been shown that the square mètre is divided into 100 square décimètres.

The cubic mètre therefore contains;—$100 \times 10 = 1000$ cubic décimètres; $1000 \times 1000 = 1{,}000{,}000$ cubic centimètres; $1000 \times 1000 \times 1000 = 1{,}000{,}000{,}000$ cubic millimètres.

Thus in order to express in cubic mètres 36 cubic mètres 3 cubic décimètres, we write 36·003 cubic mètres. Also, to reduce to the cubic mètre, 54 cubic décimètres and 6 cubic centimètres, we must write 0·054006 cubic mètre. In the first example the 3 of the cubic décimètre is placed in the third rank of the fraction, because the cubic décimètre is the thousandth part of the cubic mètre. In the second example the 6 of the cubic centimètre is placed in the sixth rank of the fraction, because the cubic centimètre is the millionth part of a cubic mètre, and there are six ciphers in a million.

3·246 cubic mètres would be read, 3 cubic mètres 246 cubic décimètres; 0·029003005 cubic mètre would be read, 29 cubic décimètres 3 cubic centimètres and 5 cubic millimètres.

If we reduce to cubic décimètres and cubic centimètres, 3·351 cubic mètres, we should write it 3351 cubic décimètres; 3351000 cubic centimètres.

0·0005 cubic mètre would be read, 500 cubic centimètres; 0·00006 cubic mètre would be read, 60 cubic centimètres; 0·0000001 cubic mètre would be read, 100 cubic millimètres.

The stère, the unit of measure for firewood, is equal to the cubic mètre. The only multiple of the stère is the décastère, which contains 10 stères, or 10 cubic mètres. The only sub-multiple is the décistère, the tenth part of the stère = 100 cubic décimètres. The measures most in use are the half-décastère, the double-stère, and the stère. The two first are used for the sake of convenience. 3 stères 5 décistères would read 3·5 stères; 28 stères 7 décistères, 28·7 stères; 19 décastères 2 décistères, 190·2 stères. In reducing 48 stères 9 décistères to décastères, write, 4·89 décastères, and read it, 4 décastères 8 stères and 9 décistères. The same number reduced to décistères would be written, 480 décistères.

Weights.—The unit of the measures of weight is the gramme.

The gramme is the weight of a cubic centimètre of distilled water, in its state of maximum density at the temperature of 4° Centigrade, or 39½ Fahrenheit, weighed in a vacuum.

These precautions have been taken with a view to render the gramme a constant weight.

The multiples of the gramme are;—The décagramme, or 10 grammes = the weight of 10 cubic centimètres of water; the hectogramme, or 100 grammes = the weight of 100 cubic centimètres

of water; the kilogramme, or 1000 grammes = the weight of 1000 cubic centimètres of water. A litre of distilled water weighs 1 kilogramme. The myriagramme, or 10,000 grammes = 10 kilogrammes, which is the usual term employed in designating it; the metric quintal, or metric hundred-weight = 100 kilogrammes; the millier, tonneau de mer, or ton of shipping = 1000 kilogrammes, or 1 cubic mètre of distilled water. The sub-multiples of the gramme are;—The décigramme, 10th part of a gramme; the centigramme, 100th part of a gramme; the milligramme, 1000th part of a gramme.

All these weights as actually in use are iron or copper; but in order to facilitate trade, the doubles and the halves of those weights are used, as ½ kilogramme, 2 kilogrammes, and so on.

To express in grammes;—2 décagrammes 5 grammes 5 décigrammes, write 25·5 grammes; 40 kilogrammes 25 grammes 5 décigrammes, 40025·5 grammes; 10 centigrammes 2 milligrammes, 0·102 gramme; 35 kilogrammes 3 hectogrammes 5 milligrammes, 35300·005 grammes.

3·735 kilogrammes should read 3 kilogrammes 7 hectogrammes and 35 grammes; 32 34 grammes, 32 grammes and 34 centigrammes; 0·006 gramme, 6 milligrammes.

If we reduce to décagrammes, hectogrammes, and kilogrammes, 143·2 grammes, we should write, 14·32 décagrammes; 1·432 hectogramme; 0·1432 kilogramme.

The same number of grammes reduced to décigrammes, centigrammes, and milligrammes, would be written, 1432 décigrammes; 14320 centigrammes; 143200 milligrammes.

Though we generally say 32 grammes, instead of 3 décagrammes and 2 grammes; 250 grammes, instead of 2 hectogrammes and 5 décagrammes; it is well, nevertheless, to bear in mind the primitive number, which will give a better conception of its value.

In order to find the weight of any volume of distilled water, it is only necessary to know that the litre, the unit of capacity, weighs one kilogramme, and we can at once see the connection between the measures of volume and weight, in the multiples and sub-multiples.

Thus 1 litre equals in weight 1 kilogramme; 10, 10 kilogrammes; 100, 100 kilogrammes; 1000, 1000 kilogrammes; 1 décilitre, 1 hectogramme; 1 centilitre, 1 décagramme, 1 millilitre, 1 gramme.

We can obtain as easily the weight of all bodies, whether liquid or solid, when we know their specific gravity or weight. By specific gravity, we mean the weight of any body, liquid or solid, of any given volume, as compared with the same volume of distilled water at 4° Centigrade.

For example, the specific gravity of olive oil is 0·9153, that is to say, olive oil is to distilled water, equal bulks, as 0·9153 is to 1. The specific gravity of melted copper is 8 788, that is to say, a cubic décimètre of that metal weighs 8 kilogrammes 788 grammes, since a cubic décimètre of water weighs 1 kilogramme.

Thus the weight of a body, solid or liquid, being given, in order to find its volume, divide its weight by its specific gravity; and to estimate its weight when its volume is given, multiply its volume by its specific gravity.

A similar relation to that which exists between the litre and the kilogramme, in all its multiples and sub-multiples, also exists between the cubic mètre and the kilogramme, as shown in the following Table;—

1·		Cubic Mètre	equals	1000		Kilogrms.
0·1	or 100	„ Décimètres	„	100		„
0·01	10	„ „	„	10		„
0·001	1	„ „	„	1		„
0·0001	100	„ Centimètres	„		1	Hectogr.
0·00001	10	„ „	„		1	Décagr.
0·000001	1	„ „	„		1	Gramme.
0·0000001	100	„ Millimètres	„		1	Dècigr.
0·00000001	10	„ „	„		1	Centigr.
0·000000001	1	„ „	„		1	Milligr.

The following tabulated forms give a comparison of the more common English and Metric weights and measures;—

SURVEYING MEASURE (Lineal).

ins.	links.	feet.	yards.	chains.	mile.	French mètres.
1 =	126 =	·0833 =	·0278 =	·00126 =	0000158 =	·0254
7·92 = 1	=	·66 =	22 =	01 =	·000125 =	·2012
12 = 1·515 =		1 =	·333 =	·01515 =	·000189 =	·3048
36 = 4·545 =		3 =	1 =	·04545 =	·000568 =	·9144
792 = 100 =		66 =	22 = 1	=	·0125 =	20 116
63360 = 8000 =		5280 =	1760 = 80	=	1 =	1609·315

1 knot or geographical mile = 6082·66 ft. = 1854 mètres = 1·152 statute mile.
1 Admiralty knot = 1·1515 mile = 6080 ft.

SQUARE MEASURE.

ins.	feet.	yards.	perches.	roods.	acre.	square mètres.
1 =	·00694 =	·000772 =	·0000255 =	00000064 =	·00000159 =	·000645
144 =	1 =	111 =	·00367 =	0000918 =	000023 =	·0929
1296 =	9 =	1 =	·0331 =	·000826 =	·0002062 =	·8361
39204 =	272¼ =	30¼ = 1	=	·025 =	·00625 =	25 292
1568160 =	10890 =	1210 = 40	=	1 =	·25 =	1011·7
6272640 =	43560 =	4840 = 160	=	4 =	1 =	4046·7

1 chain wide .. = 8 acres a mile.
10 square chains = 1 acre.
1 hectare .. = 2·471143 acres.
1 square mile { = 27878400 sq. feet. = 3097600 sq. yards. = 640 acres.
Acres × ·0015625 = sq. miles.
Sq. yds. × 000000323 = sq. miles.

Cubic Measure.

ins.	feet.	yard.	cubic mètre, or stère.
1 =	·0005788 =	·000002144 =	·000016386
1728 =	1 =	·03704 =	·028315
46656 =	27 =	1 =	·764513

Measure of Capacity.

pints.	gall.	peck.	bushel.	quarter.	wey.	last.	cub. ft.	litres.
1 =	·125 =	·0625 =	·01562 =	·00195 =	·00039 =	·000195 =	·02 =	·5676
8 =	1 =	·5 =	·125 =	·0156 =	·00312 =	·00156 =	·1604 =	4·541
16 =	2 =	1 =	·25 =	·03125 =	·00625 =	·00312 =	·3208 =	9·082
64 =	8 =	4 =	1 =	·125 =	·025 =	·0125 =	1·283 =	36·32816
512 =	64 =	32 =	8 =	1 =	·2 =	1 =	10·264 =	290·625
2560 =	320 =	160 =	40 =	5 =	1 =	·5 =	51·319 =	1453·126
5120 =	640 =	320 =	80 =	10 =	2 =	1 =	102·64 =	2906·25

Long Measure.

	Mètres.	Inches.	Feet.	Yards.	Miles.
Millimètre	·001	·03937	·00328	·00109	..
Centimètre	·01	·3937	·0328	·0109	..
Décimètre	·1	3·937	·328	·1093	·00006
Mètre; 1 mètre = 1·093633056 yard	1	39·37079	3·2809	1·09363	·00062
Décamètre	10	..	32·809	10·936	·0062
Hectomètre	100	..	328	109·36	·06214
Kilomètre	1000	..	3280·9	1093·6	·62138
Myriamètre	10000	..	..	..	6·21382

Square Measure.

	Square mètres.	Square inches.	Square feet.	Square yards.	Acres.
Milliare	·1	155	1·076	·119	..
Centiare; or 1 sq. mètre = 1·196033292 sq. yd.	1	1550	10·764	1·19	·00025
Déciare	10	15501	107·64	11·96	·0025
Are	100	..	1076·4	119·6	·0247
Decare	1000	..	..	1196	·2474
Hectare	10000	..	..	11960	2·4711

Solid Measure.

	Cubic mètres.	Cubic inches.	Cubic feet.	Cubic yards.
Millistère	·001	61·028	..	..
Centistère	·01	610·28	·353	..
Décistère	·1	6102·8	3·5317	·1308
Stère, or cubic mètre ..	1	61028	35·317	1·308
Décastère	10	..	..	13·08
Hectostère	100	..	..	130·802

Weights.

	Grammes.	Avoirdupois oz.	Avoirdupois lbs.	Cwts.	Tons.	Grains Troy.
Milligramme ..	·001	..	..	..	..	·015
Centigramme ..	·01	..	..	..	..	·154
Décigramme ..	·1	..	..	..	..	1·543
Gramme	1	·035	·0022	..	..	15·432349
Décagramme ..	10	·35	·022	..	..	..
Hectogramme	100	3·527	·22046	..	..	..
Kilogramme ..	1,000	35·2739	2·2046	·019	·00098	..
Myriagramme	10,000	..	22·04	·1968	·00984	..
Quintal	100,000	..	220·46	1·9684	·0984	..
Millier or Bar	1,000,000	..	2204·62	19·684	·984206	..

Dry and Fluid Measure.

	Litres.	Inches.	Feet.	Gallons.	Bushels.
Millilitre	·001	·061	..	·00022	..
Centilitre	·01	·61	..	·0022	..
Décilitre	·1	6·1	..	·022	·0027
Litre; litre = ·22009668 gallon = a cubic décimètre	1	61·02	·0353	·22	·0275
Décalitre	10	610·28	·353	2·2	·276
Hectolitre	100	..	3·53	22	2·751
Kilolitre; kilolitre = a cubic mètre	1000	..	35·317	220	27·512
Myrialitre	10000	..	353·17	2200·967	27·5121

Comparative scale of English and French measures. This scale may be used for any other portion of the metrical system; for instance, if décimètres be used instead of mètres, the corresponding scale of feet will be 5—10—15 feet respectively, instead of 50—100—150; 10 décimètres being equal to the mètre.

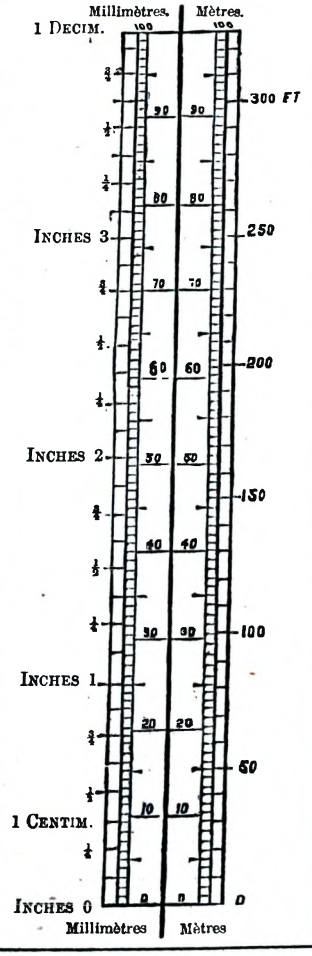

French Mètre reduced to English Inches.

Mètre.	Inches.
·001587	= 1/16
·00317	= 1/8
·00476	= 3/16
·00635	= 1/4
·00794	= 5/16
·00952	= 3/8
·01111	= 7/16
·01270	= 1/2
·01429	= 9/16
·01587	= 5/8
·01746	= 11/16
·01905	= 3/4
·02064	= 13/16
·02222	= 7/8
·02381	= 15/16
·02540	= 1
·05078	= 2
·0762	= 3
·1016	= 4
·1270	= 5
·1524	= 6
·1778	= 7
·2032	= 8
·2286	= 9
·2540	= 10
·2794	= 11
·3048	= 12

Milli-mètres.	Mètre.	Inches.	Feet.
1 =	·001 =	·03937 =	·00328
2 =	·002 =	·07874 =	·00656
3 =	·003 =	·11811 =	·00984
4 =	·004 =	·15748 =	·01312
5 =	·005 =	·19685 =	·01641
6 =	·006 =	·23622 =	·01969
7 =	·007 =	·2756 =	·02397
8 =	·008 =	·31497 =	·02625
9 =	·009 =	·35434 =	·02953
Centi-mètres.			
1 =	·01 =	·3937 =	·0328
2 =	·02 =	·7874 =	·0656
3 =	·03 =	1·1811 =	·0984
4 =	·04 =	1·5748 =	·1312
5 =	·05 =	1·9685 =	·1641
6 =	·06 =	2·3622 =	·1969
7 =	·07 =	2·756 =	·2397
8 =	·08 =	3·1497 =	·2625
9 =	·09 =	3·5434 =	·2953
Déci-mètres.			
1 =	·1 =	3·9371 =	·3281
2 =	·2 =	7·8742 =	·6562
3 =	·3 =	11·8112 =	·9843
4 =	·4 =	15·7483 =	1·3124
5 =	·5 =	19·6854 =	1·6404
6 =	·6 =	23·6225 =	1·9685
7 =	·7 =	27·5596 =	2·3966
8 =	·8 =	31·4966 =	2·6247
9 =	·9 =	35·4337 =	2·9528

The mètre = 3·2808992 feet.

PRESSURE.—LBS. A SQUARE INCH COMPARED WITH KILOGRAMMES A SQUARE CENTIMÈTRE.

Lbs. per inch.	Kilogs. per cent.	Lbs. per inch.	Kilogs. per cent.	Lbs. per inch.	Kilogs. per cent.	Lbs. per inch.	Kilogs. per cent.	Lbs. per inch.	Kilogs. per cent.	Lbs. per inch.	Kilogs. per cent.	Lbs. per inch.	Kilogs. per cent.
1	0·0703	16	1·125	31	2·18	45	3·16	59	4·15	73	5·13	87	6·12
2	0·1406	17	1·195	32	2·25	46	3·23	60	4·22	74	5·20	88	6·19
3	0 2109	18	1·265	33	2·32	47	3·30	61	4·29	75	5·27	89	6·26
4	0·2812	19	1·336	34	2·39	48	3·37	62	4·36	76	5·34	90	6·33
5	0·3515	20	1·406	35	2·46	49	3·44	63	4·43	77	5·41	91	6·40
6	0·4218	21	1·48	36	2·53	50	3·51	64	4·50	78	5·48	92	6·47
7	0·4921	22	1·55	37	2·60	51	3·58	65	4·57	79	5·55	93	6·54
8	0·5624	23	1·62	38	2·67	52	3·65	66	4·64	80	5 62	94	6 61
9	0·6327	24	1·69	39	2·74	53	3·72	67	4·71	81	5·69	95	6·68
10	0·7023	25	1·76	40	2·81	54	3·80	68	4·78	82	5·76	96	6·75
11	0·773	26	1·83	41	2·88	55	3·87	69	4·85	83	5·83	97	6·82
12	0·843	27	1·90	42	2 95	56	3·94	70	4·92	84	5 90	98	6 89
13	0 914	28	1·97	43	3·02	57	4·01	71	4·99	85	5·97	99	6·96
14	0·984	29	2·04	44	3·09	58	4·08	72	5·06	86	6·04	100	7·03
15	1·055	30	2·11										

COMPARATIVE TABLE OF KILOGRAMMES, LBS., AND CWTS.

Kilogs.	Lbs. Avoir.	Cwts.	Kilogs.	Lbs. Avoir.	Cwts.	Kilogs.	Lbs. Avoir.	Cwts.	Kilogs.	Lbs. Avoir.	Cwts.
1	2·20	·0197	27	59·52	·531	53	116·84	1·043	78	171·96	1·535
2	4·41	·0394	28	61·73	551	54	119·05	1·063	79	174·16	1·555
3	6 62	·0591	29	63·93	·571	55	121 25	1·083	80	176 37	1·575
4	8 82	0787	30	66·14	·590	56	123·45	1·102	81	178·57	1·594
5	11·02	·0984	31	68·34	·610	57	125 66	1 122	82	180 78	1·614
6	13·23	1181	32	70·55	·630	58	127·87	1 142	83	182·98	1·634
7	15·43	·1378	33	72 75	·650	59	130·07	1 161	84	185·19	1·653
8	17·64	1575	34	74 96	669	60	132·23	1·181	85	187·39	1·673
9	19·84	·1771	35	77·16	689	61	134 48	1 201	86	189 60	1·693
10	22 05	·1968	36	79·37	·709	62	136 68	1 220	87	191·80	1·712
11	24·25	·2165	37	81 57	728	63	138·89	1 240	88	194 01	1·732
12	26 45	·2362	38	83 78	748	64	141·09	1·259	89	196 21	1·752
13	28 66	·2559	39	85 98	·768	65	143 30	1 279	90	198 42	1·772
14	30 86	2756	40	88·18	·787	66	145·50	1 299	91	200·62	1·791
15	33 07	2953	41	90 39	·807	67	147·71	1 319	92	202·82	1 811
16	35·27	·3150	42	92 59	827	68	149 91	1 338	93	205 03	1·831
17	37 48	3346	43	94 80	846	69	152·12	1 358	94	207·23	1·850
18	39 68	3544	44	97·00	866	70	154 32	1 378	95	209 44	1 869
19	41 89	3740	45	99 21	·886	71	156·53	1 398	96	211·64	1 888
20	44·09	·3937	46	101 41	905	72	158·73	1 417	97	213 85	1·909
21	46 30	·4134	47	103·62	925	73	160 94	1·437	98	216·05	1·929
22	48·50	·4331	48	105 82	945	74	163·14	1·457	99	218 26	1 949
23	50·70	4527	49	108 03	964	75	165 35	1·476	100	220·46	1·968
24	52 91	4724	50	110 23	984	76	167·55	1·496	101	222 66	1·988
25	55·11	·4921	51	112 43	1 004	77	169 75	1·516	102	224·87	2 008
26	57 32	·512	52	114 64	1 024						

English and French Linear Measures Compared.

English.	French.		
Inches. 32nds.	M.	C.	Mm.
1	0	0	0·79
2	0	0	1·58
3	0	0	2·38
4 or 1/8	0	0	3·17
5	0	0	3·96
6	0	0	4·75
7	0	0	5·55
8 or 1/4	0	0	6·34
9	0	0	7·13
10	0	0	7·93
11	0	0	8·72
12 or 3/8	0	0	9·51
13	0	1	0·30
14	0	1	1·10
15	0	1	1·89
16 or 1/2	0	1	2·68
17	0	1	3·47
18	0	1	4·27
19	0	1	5·16
20 or 5/8	0	1	5·86
21	0	1	6·65
22	0	1	7·44
23	0	1	8·23
24 or 3/4	0	1	9·03
25	0	1	9·82
26	0	2	0·61
27	0	2	1·41
28 or 7/8	0	2	2·20
29	0	2	2·99
30	0	2	3·79
31	0	2	4·58
32 or 1 in.	0	2	5·399

Inches.	M.	C.	Mm.
1	0	2	5·40
1/8	0	2	8·56
1/4	0	3	1·73
3/8	0	3	4·90
1/2	0	3	8·07
5/8	0	4	1·25
3/4	0	4	4·42
7/8	0	4	7·59
2	0	5	0·79
1/8	0	5	3·96
1/4	0	5	7·13
3/8	0	6	0·30
1/2	0	6	3·47
5/8	0	6	6·65
3/4	0	6	9·82
7/8	0	7	2·99
3	0	7	6·19
1/8	0	7	9·36
1/4	0	8	2·53
3/8	0	8	5·70
1/2	0	8	8·87

English.	French.		
Inches.	M.	C.	Mm.
3 5/8	0	9	2·04
3/4	0	9	5·22
7/8	0	9	8·39
4	0	10	1·60
1/8	0	10	4·77
1/4	0	10	7·94
3/8	0	11	1·11
1/2	0	11	4·28
5/8	0	11	7·46
3/4	0	12	0·63
7/8	0	12	3·80
5	0	12	6·99
1/8	0	13	0·16
1/4	0	13	3·33
3/8	0	13	6·50
1/2	0	13	9·67
5/8	0	14	2·85
3/4	0	14	6·02
7/8	0	14	9·19
6	0	15	2·39
1/8	0	15	5·56
1/4	0	15	8·73
3/8	0	16	1·90
1/2	0	16	5·07
5/8	0	16	8·25
3/4	0	17	1·42
7/8	0	17	4·59
7	0	17	7·79
1/8	0	18	0·96
1/4	0	18	4·13
3/8	0	18	7·30
1/2	0	19	0·47
5/8	0	19	3·65
3/4	0	19	6·82
7/8	0	19	9·99
8	0	20	3·19
1/8	0	20	6·36
1/4	0	20	9·53
3/8	0	21	2·70
1/2	0	21	5·87
5/8	0	21	9·05
3/4	0	22	2·22
7/8	0	22	5·39
9	0	22	8·59
1/8	0	23	1·76
1/4	0	23	4·93
3/8	0	23	8·10
1/2	0	24	1·27
5/8	0	24	4·45
3/4	0	24	7·62
7/8	0	25	0·79
10	0	25	3·99
1/8	0	25	7·16
1/4	0	26	0·33
3/8	0	26	3·50
1/2	0	26	6·67
5/8	0	26	9·85
3/4	0	27	3·02

English.	French.		
Inches.	M.	C.	Mm.
10 7/8	0	27	6·19
11	0	27	9·39
1/8	0	28	2·56
1/4	0	28	5·73
3/8	0	28	8·90
1/2	0	29	2·07
5/8	0	29	5·25
3/4	0	29	8·42
7/8	0	30	1·59
12	0	30	4·79

Feet.	M.	C.	Mm.
1	0	30	4·79
2	0	60	9·6
3	0	91	4·4
4	1	21	9·2
5	1	52	4·0
6	1	82	8·8
7	2	13	3·6
8	2	43	8·4
9	2	74	3·2
10	3	04	8·0
11	3	35	2·8
12	3	65	7·6
13	3	96	2·4
14	4	26	7·2
15	4	57	2·0
16	4	87	6·8
17	5	18	1·6
18	5	48	6·4
19	5	79	1·2
20	6	09	6·0
21	6	40	0·8
22	6	70	5·6
23	7	01	0·4
24	7	31	5·2
25	7	62	0·0
26	7	92	4·8
27	8	22	9·6
28	8	53	4·4
29	8	83	9·2
30	9	14	4·0
31	9	44	8·8
32	9	75	3·6
33	10	05	8·4
34	10	36	3·2
35	10	66	8·0
36	10	97	2·8
37	11	27	7·6
38	11	58	2·4
39	11	88	7·2
40	12	19	2·0
41	12	49	6·8
42	12	80	1·6
43	13	10	6·4
44	13	41	1·2
45	13	71	6·0
46	14	02	0·8
47	14	32	5·6
48	14	63	0·4
49	14	93	5·2
50	15	24	0·0

FRENCH AND ENGLISH LINEAR MEASURES COMPARED.

French.	English.		French.	English.		French.	English.	
Mm.	Inches.	In. 32nds.	M. Cm.	Inches.	In. 32nds.	M. Cm.	Inches.	In. 32nds.
1	0·03937 or	0 1 F	0 30	11·8110 or	11 26	0 73	28·7401 or	28 24
2	0 07874 „	0 3 B	0 31	12·2047 „	12 11	0 74	29·1338 „	29 9
3	0·11811 „	0 4 B	0 32	12·5984 „	12 19	0 75	29·5275 „	29 16
4	0 15748 „	0 5 F	0 33	12·9921 „	12 31	0 76	29·9212 „	29 30
5	0·19685 „	0 6 F	0 34	13·3858 „	13 12	0 77	30·3149 „	30 10
6	0·23622 „	0 8 B	0 35	13·7795 „	13 25	0 78	30·7086 „	30 23
7	0·27559 „	0 9 B	0 36	14·1732 „	14 6	0 79	31·1023 „	31 3
8	0·31496 „	0 10 F	0 37	14·5669 „	14 18	0 80	31·4960 „	31 16
9	0·35433 „	0 11 F	0 38	14·9606 „	14 31	0 81	31·8897 „	31 29
10	0·39370 „	0 13 B	0 39	15·3543 „	15 11	0 82	32·2834 „	32 9
			0 40	15·7480 „	15 24	0 83	32·6771 „	32 21
M. Cm.	Inches.	In. 32nds.	0 41	16·1417 „	16 4	0 84	33·0708 „	33 2
			0 42	16·5354 „	16 17	0 85	33·4645 „	33 13
0 1	0·3937 or	0 13	0 43	16·9291 „	16 30	0 86	33·8582 „	33 27
0 2	0·7874 „	0 25	0 44	17·3228 „	17 10	0 87	34·2519 „	34 8
0 3	1·1811 „	1 6	0 45	17·7165 „	17 23	0 88	34·6456 „	34 21
0 4	1·5748 „	1 18	0 46	18·1102 „	18 4	0 89	35·0393 „	35 1
0 5	1·9685 „	1 31	0 47	18·5039 „	18 16	0 90	35·4330 „	35 14
0 6	2·3622 „	2 12	0 48	18·8976 „	18 29	0 91	35·8267 „	35 27
0 7	2·7559 „	2 24	0 49	19·2913 „	19 9	0 92	36·2204 „	36 7
0 8	3·1496 „	3 5	0 50	19·6850 „	19 22	0 93	36·6141 „	36 16
0 9	3·5433 „	3 18	0 51	20·0787 „	20 3	0 94	37·0078 „	37 0
0 10	3·9370 „	3 30	0 52	20·4724 „	20 15	0 95	37·4015 „	37 13
0 11	4·3307 „	4 11	0 53	20·8661 „	20 28	0 96	37·7952 „	37 25
0 12	4·7244 „	4 23	0 54	21·2598 „	21 8	0 97	38·1889 „	38 22
0 13	5·1181 „	5 4	0 55	21·6535 „	21 21	0 98	38·5826 „	38 17
0 14	5·5118 „	5 16	0 56	22·0472 „	22 2	0 99	38·9763 „	38 31
0 15	5·9055 „	5 29	0 57	22·4409 „	22 14	1 00	39·3700 „	39 12
0 16	6·2992 „	6 10	0 58	22·8346 „	22 27			
0 17	6·6929 „	6 21	0 59	23·2283 „	23 5			
0 18	7·0866 „	7 3	0 60	23·6220 „	23 20	M. Cm.	Ft. Inches.	Ft. In. 32nds.
0 19	7·4803 „	7 16	0 61	24·0157 „	24 1			
0 20	7·8740 „	7 28	0 62	24·4094 „	24 13	1 00	3 3·370 or	3 3 12
0 21	8·2677 „	8 8	0 63	24·8031 „	24 26	2 00	6 6·740 „	6 6 24
0 22	8·6614 „	8 22	0 64	25·1968 „	25 6	3 00	9 10·110 „	9 10 4
0 23	9·0551 „	9 2	0 65	25·5905 „	25 17	4 00	13 1·480 „	13 1 15
0 24	9·4488 „	9 14	0 66	25·9842 „	25 31	5 00	16 4·850 „	16 4 14
0 25	9·8425 „	9 27	0 67	26·3779 „	26 12	6 00	19 8·220 „	19 8 7
0 26	10·2362 „	10 8	0 68	26·7716 „	26 25	7 00	22 11·590 „	22 11 19
0 27	10·6299 „	10 20	0 69	27·1653 „	27 5	8 00	26 2·960 „	26 2 31
0 28	11·0236 „	11 1	0 70	27·5590 „	27 18	9 00	29 6·330 „	29 6 11
0 29	11·4173 „	11 13	0 71	27·9527 „	27 31	10 00	32 9·700 „	32 9 23
			0 72	28·3464 „	28 11			

The letters F and B indicate that the equivalent 32nd is either Full or Bare.

MILL. FR., *Moulin;* GER., *Mühle;* ITAL., *Mulino;* SPAN., *Molino.*

A mill is an engine or machine for grinding or comminuting any substance, as grain, by rubbing or crushing it between two hard indented surfaces, generally of stone or metal, usually having a word prefixed denoting the particular object to which it is applied; as, a rolling mill, a paint-mill, a cider-mill, and so on. In modern usage the term mill includes various other machines or combinations of machinery which resemble the flour-mill, to which the term was first applied, not in its circular crushing or grinding action, but in the more general one of transforming some raw material by mechanical processes into a state or condition for use; as saw-mills, cotton-mills, powder-mills, oil-mills, silk-mills, to some of which the term manufactory or factory is also applied. The building, with its machinery, where grinding or some process of manufacturing is carried on is also called a mill.

Windmills.—For giving motion to machinery, windmills have been and still are very extensively used. Engineers of the last generation devoted great attention to the construction of windmills, and brought them to great perfection. The introduction of steam-power—a power economical, manageable, and always to be depended on—has, in a great measure, superseded that of wind as a mover of machinery. It is true after the first cost of a windmill, the power is comparatively inexpensive; but it is so variable in intensity—sometimes, when it is not required, exerting great force, and sometimes, when it may be most wanted, totally ineffective—that it is generally preferable to apply a force, perhaps considerably more expensive in its production, but constant, steady, and completely under control.

Windmills are of two kinds, horizontal and vertical. The former have been very little used, for it is found in practice that they are by no means so effective as the latter. The mode of con-

structing a horizontal windmill is like that represented on the plan, Fig. 5878, or some modification of the same principle of construction. A wheel mounted on a vertical axis or shaft, and having flat vanes or boards fitted round its circumference, is enclosed in a circular casing, which is fitted with boards fixed obliquely, or in such lines as if produced inwards would touch the circumference of the wind-wheel. By this arrangement the wind, from whatever point it may blow, causes the wheel to revolve in the same direction. Part of the breeze passes between the oblique boards of the casing, and acts on the blades of the wheel; while part is intercepted by the boards, and either reflected inwards so as to propel the blades in the same direction, or reflected outwards so as not to act upon them in the opposite direction.

5878.

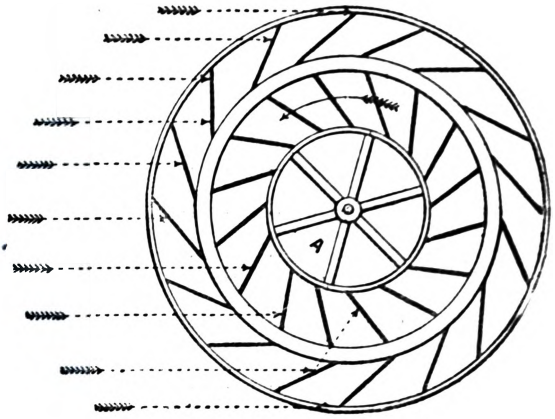

Sometimes horizontal windmills have been made with a casing partially surrounding the wind-wheel, Fig. 5879, and capable of being turned round by means of a vane, so as to permit the wind only to act on one side of the wheel, while the other is completely sheltered.

5879.

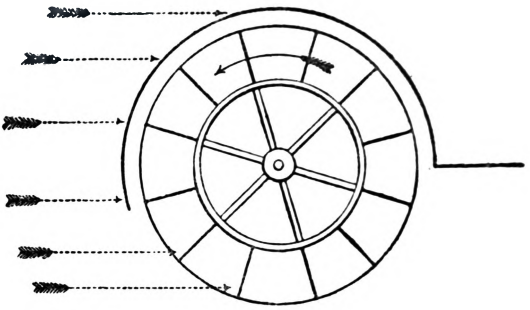

The vertical windmill, as is well known, consists of an axle or shaft, nearly horizontal, mounted in bearings at the summit of a tower, with four or more blades or sails attached to it. These sails are set at an angle with the axis, so that when the wind blows directly on the face of the mill, its oblique action on the sails is resolved into two forces—one in the direction of the axis, and the other perpendicular to it, which is the direction in which the sails revolve. Numerous experiments and computations were made to determine the most advantageous angles for setting the sails, and their most effective forms and proportions. If we suppose the radius of a sail divided into six equal parts, Fig. 5880, and circles traced through the points of division, the velocity of each point in revolving is proportional to the part of its circle intercepted between two radii, or proportional to its own radius. If, then, we make a series of plans of the sail at these different parts, we see that as we approach the centre we should increase the obliquity of the sail to its plane of motion, so as to allow for its slower escape sideways from the impulse of the wind. The sails accordingly are not made flat surfaces inclined equally to the plane of their revolution, but surfaces of varying inclination, somewhat like portions of screw blades, twisting as it were from a certain obliquity at their extremes in a greater obliquity at the centre. The angles found most advantageous in practice are given by the celebrated engineer Smeaton as follow, as well as those used by some other engineers;—

5880.

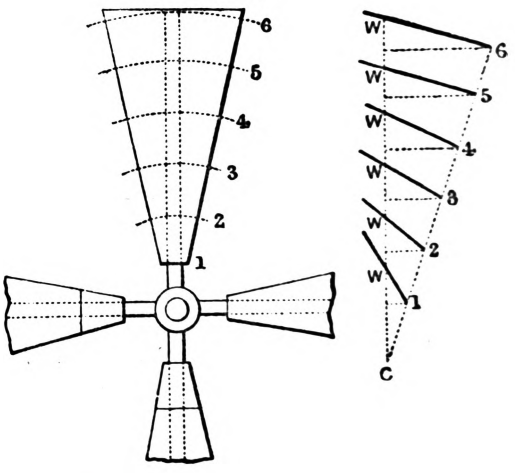

Distance from centre	1	2	3	4	5	6
Inclination to plane of motion (Smeaton)	18°	19°	18°	16°	12½°	7°
„ „ otherwise	24°	21°	18°	14°	9°	3°

In the angles given by Smeaton an irregularity is observed in the first, which should by theoretical reasoning be greater than the second, whereas Smeaton makes it less. The following rule may be adopted as a very near approximation. To find the angle at which the sail should be inclined to the plane of revolution at any distance from the centre;—

Rule.—Multiply 18 twice by the distance from the centre, divide the product twice by the total radius, and subtract the quotient from 23; the remainder is the inclination in degrees.

Example.—In a windmill 60 ft. in diameter, required the inclination of the sail 20 ft. from the centre.

Here 30 ft. is the total radius, and $\frac{18 \times 20 \times 20}{30 \times 30} = 8$, which, subtracted from 23, gives 15°, the angle of that point.

Were we to divide the radius 30 ft. into six equal parts, and calculate the angles at each point, we should find them correspond nearly with the means of those given by Smeaton and others, as may be seen by the following Table;—

Parts of radius	1	2	3	4	5	6
Distances from centre	5 feet	10 feet	15 feet	20 feet	25 feet	30 feet
Angles (Smeaton)	18°	19°	18°	16°	12½°	7°
„ (others)	24°	21°	18°	14°	9°	3°
Means	21°	20°	18°	15°	10¾°	5°
Angles by the rule	22½°	21°	18½°	15°	10¼°	5°
Differences from means	1½°	1°	½°	0°	¼°	0°

Having determined the proper inclination of the sails at different distances from the centre, it next becomes important to inquire how much of the surface of the whole circle should be filled with sails. Mills are generally made with four strong wooden arms or radii, fixed firmly in a central socket, and steadied and stiffened by tie-rods, connecting their extremities together, and with a projecting strut on the central boss. The width of each sail at the extreme should be about half of the radius, so that in a mill 60 ft. diameter, or 30 ft. radius, each sail would be 15 ft. wide at the extreme. The part of the arm next the centre for about $\frac{1}{6}$ of the radius, that is, 5 ft. in the case supposed, is not fitted with sails because the surface there is so little effective, as well from its short leverage as from its obstructing the wind reflected from the head of the turret behind it. The width at the inner end should be $\frac{1}{3}$ of the radius, or 10 ft. The surface of each sail is therefore 312½ sq. ft., and the total of the four is $312\frac{1}{2} \times 4 = 1250$ sq. ft.

The total area of a circle 60 ft. in diameter is somewhat above 2800 sq. ft., so that not half the surface of the circle is clothed with sails. There would be no disadvantage in extending the surface by making the sails broader or more numerous, until it became $\frac{3}{4}$ of the whole surface. Beyond this additional sail-surface is disadvantageous, for it appears to obstruct the free passage of the currents reflected from the sails, and thus clog their motions. It is found advantageous to arrange the surface of a sail somewhat in the proportions of the diagram, Fig. 5881, which represents the front view of one sail.

5881.

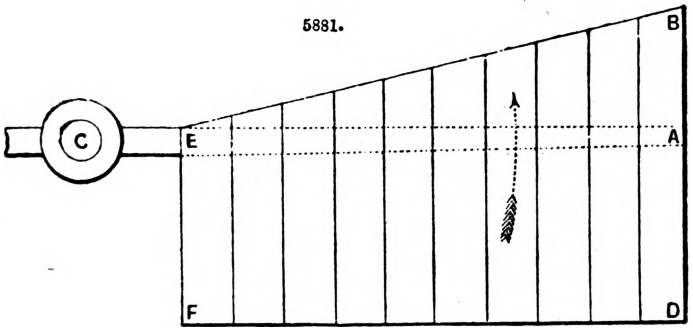

Thus if A C is 30 ft., then A E should be 25 ft., A D or E F 10 ft., and A B 5 ft.

The covering of the surface, so as to catch the impulse of wind, formerly consisted of canvas fixed on a roller at one side of the arm, on which it could be rolled like a window-blind, or from which it could be unrolled so as to cover the whole sail, which was filled in with wooden framing to support the canvas pressed against it by the wind. Sometimes the canvas, instead of being in one sheet, was subdivided into numerous separate sheets mounted on rollers, and apparatus was provided so that the canvas might be wound on the rollers or unwound at pleasure while the mill was in motion. As the wind is exceedingly variable, and as the quantity of work required of the mill also might vary to a considerable extent, it was found necessary to provide some apparatus by which the mill might regulate itself, so that its velocity should not be excessive at one time, and too small at another. One mode of effecting this object was to apply to the machinery of a mill a governor, like that of a steam-engine. This governor consists of two heavy balls suspended from the summit of a vertical revolving spindle by jointed rods. The spindle being at rest, the balls hang close to it on each side; but on the spindle being caused to revolve rapidly, the balls, im-

pelled by centrifugal force, fly away from the central axis. A system of levers and rods connected this apparatus with the sail-rollers, so that when the balls flew outwards from increased velocity, the sails were furled; and when they fell inwards from diminished speed of revolution, the sails were unfurled. The quantity of surface thus presented to the wind was adjusted to its force, and a tolerably equable velocity of the machinery was attained. In some more recent mills an ingenious contrivance for regulating the surface of sail according to the force of the wind has been successfully adopted. The sails consist of a framework filled in with louvre-boards hinged on pivot-pins near one of their edges, and all connected by levers and rods with a sliding boss on the central axis of the windmill, Fig. 5882. When the wind blows strongly against the louvre-boards, it forces them out of their vertical position, and passes freely through the openings between them. The surface of the sails is thus diminished by the pressure of the wind itself. To prevent its being too much diminished, the sliding boss connected with the louvre-boards is pressed upon by a lever loaded by a certain weight sufficient to balance, as far as may be desirable, the pressure tending to force aside the louvres, and thus to keep them, to a certain extent, up to their work. When the load on the mill—that is to say, the quantity of work effected by it—is varied, the weight may be varied accordingly; and thus the effective amount of surface in the sails may be adjusted to the average force of the wind and the work to be done by it. When the wind-force exceeds or falls short of its average, the greater or less inclination of the louvres very nearly compensates for the variation.

5882.

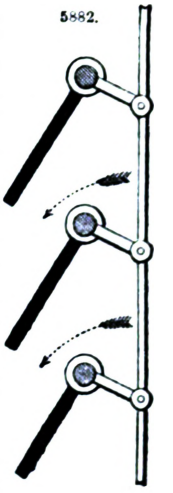

The sails of a windmill should directly face the wind in order to receive its most advantageous action; but, as the direction of the wind often changes, it is necessary to adopt some arrangement for varying that of the mill-shaft accordingly. The summit of the mill-tower, in which the mill-shaft is mounted, is therefore made to revolve, so that at any time the direction of the shaft may be varied, and the sails presented to the wind. In old mills, and indeed in many small mills still existing, this change of direction is effected by hand. A long lever is fixed to the movable cap or summit of the tower, and extends obliquely to the ground. The miller watches the direction of the wind, and by moving this lever turns the cap round to its proper position. But in large mills this would require considerable power; and, moreover, constant attention would have to be paid to the changes of the wind. Were a single change neglected the mill might be destroyed; for as the sails are made and strengthened by tie-rods to receive the wind's pressure on their face, a change of the wind to the opposite direction might throw a great strain on their back, for meeting which no provision is made. A simple mode of making the change of direction self-acting is to fit the back of the cap with a large vane, which, like that of a weathercock, would cause the sails to be presented to the wind from whatever quarter it might blow. But when mills are of considerable size the vane would require to be very large and cumbrous. The contrivance generally employed is neat and ingenious. Behind the cap, Fig. 5883, on the side opposite that through which the wind-shaft passes, a framing is made to project outwards. On this framing there is mounted a small windmill on an axis transverse to that of the main arms. The cap rests on rollers fitted in the circular top of the tower so that it may move freely round; and a toothed circular rack is also fixed on the summit of the tower. A spindle, fitted with bevel-gearing so that it may be caused to revolve by the revolution of the small mill, conveys motion to a toothed pinion which gears into the circular rack. When the main mill has its face presented to the wind, the small one stands edgeways to it, and therefore remains at rest; but as soon as the wind veers it begins to act on one side or the other of the small mill, and thus causes it to revolve. The pinion is thus made to travel along the fixed rack and turn the cap of the mill round until the main mill is again brought to face the wind in its new direction. This arrangement is found to be very effective, and when it is properly applied the mill requires no attention in respect of direction to the wind.

5883.

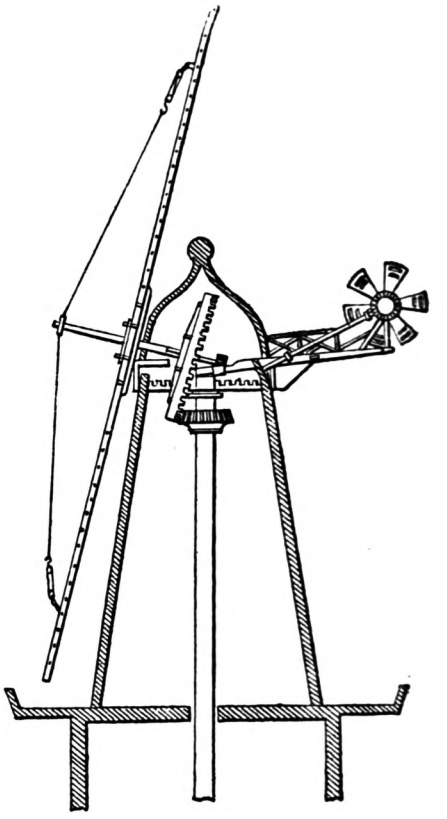

In estimating the velocity with which the sails of a windmill revolve, we have to consider not only the force of the wind upon them, but also the resistance to their motion occasioned by the work done by the mill. A, B, Fig. 5884, may represent the edge of a surface presented obliquely to the

wind, and capable of moving in the direction C, D, at right angles to that of the wind. If the surface be free and unresisted in its motion, and the wind be considered to produce its full effect upon it, the proportion of its velocity to that of the wind would be estimated by that of the line B, B′, to the line B, A′; for it is clear that while the wind travels over the distance B, A, the surface moves to the position dotted, that is, over B, B′. But if the motion of the surface be resisted, its velocity in relation to that of the wind is diminished. In the case of windmill sails, we may suppose such a load of work on the mill that the velocity of the sails is not more than half what it would be were there no resistance. We may therefore assume that the velocity of the sail relatively to the wind would be expressed by the ratio of half the length of the line B, B′, to the length of A, B′. Taking the wind as a gentle breeze, the velocity of which in the Table is about five miles an hour, and the inclination of the sail or angle A, B, B′, half-way from the centre 18°, we should find the half of B, B′, to be about 1½ times A, B, or the velocity of the sail, 1½ × 5 = 7½ miles an hour—about 660 ft. a minute. If the windmill be about 60 ft in diameter, the diameter of the middle point of the arm is 30 ft., the circumference of the circle in which that point revolves is 94 ft., and the number of revolutions made a minute is therefore $\frac{660}{94}$, about 7.

5884.

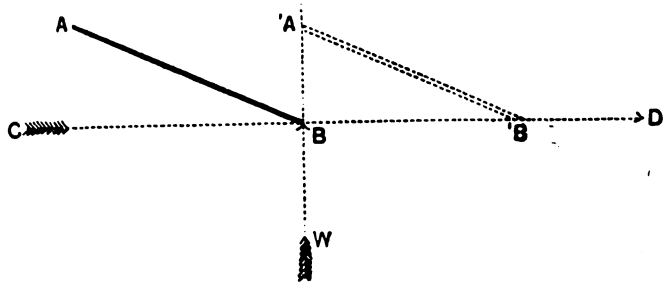

If now we calculate the speed of the extremities of the arms, we find that it is 1320 ft. a minute, or about 15 miles an hour; three times that of the wind, which we have assumed as 5 miles an hour. Did we assume a wind of greater velocity, we should have to take into account the self-regulating arrangement, which diminishes the amount of surface exposed, and therefore prevents the mill from attaining so much increase of speed as it would without regulation. Under ordinary circumstances the speed of the outer extremities of the arms ranges from 20 to 30 miles an hour. We may assume 30 miles an hour when the wind blows at 10 miles with a pressure of about ½ lb. on the square foot. The total surface of the sails unfurled in a mill 60 ft. diameter, is 1250 sq. ft; we may suppose half lost by furling, leaving 625 effective. As the surface is set obliquely to the wind, the pressure in the direction of motion would be reduced from ½ lb. to about ⅓ lb. as a mean over the whole of the arms, giving a total pressure in the direction of motion of about 90 lbs. The mean velocity of the arms is half that of the extreme, 15 miles an hour, or 1320 ft. a minute. We have therefore 90 lbs. moving at 1320 ft. a minute, which is equivalent to a force of 90 × 1330 = 118,800 lbs. moving at 1 ft. a minute. A horse-power is reckoned as equivalent to 33,000 lbs. moved 1 ft. a minute; therefore, the power of the mill we have reckoned is about 3½ horse-power.

When we double the diameter of a mill, we quadruple its power, for we quadruple its effective surface. The areas of circles are proportional to the squares of their diameters; and as the similar parts of the areas are occupied by sails, they are also as the squares of the diameters.

It is not at all an easy matter to estimate the powers of windmills. The proper guide as to power, velocity, and construction is experience. Some of the works of Smeaton contain much valuable information respecting this branch of practical mechanics; and to these we must refer such of our readers as require a more full discussion of the subject than our limits permit us to offer.

Fig. 5885 is a vertical section of a windmill arranged to drive the gears of a rape-oil mill. *a a* is the mill-shaft; *b*, *b*, the sails; *c c*, movable support for the mill-shaft; *e e*, hand-lever for shifting the movable mill-cap; *f*, *f*, bearings of the cap, *g g*, summit of mill-tower; *h h*, main shaft; *i*, toothed wheel and pinion turning the shaft *j* of the stones *k*, *k*; *l*, bevel-gears for driving such other machines as the stamp battery, or press, seen at p^2, n'.

As a force applied to the movement of machinery, wind has few advantages except its little cost after the first outlay for a windmill has been made. It is chiefly available in flat countries, where there is no opportunity of obtaining the preferable power of water, and where there is little interruption to the aërial currents. In hilly countries windmills are often subject to derangement from the excessive force of the gusts of wind that often occur in such regions. In tropical countries, particularly islands and places near the sea-shore, the daily occurrence of the land and sea breezes, occasioned by the action of the solar heat on the land, provides a certain amount of wind-power, which may be almost always depended on. But in these countries, on the other hand, there often occur tornadoes or hurricanes of extreme violence, that sweep away almost everything that may oppose their progress; and thus frequently destroy windmills, and occasion renewed outlay in their reconstruction. The principal use to which windmills are devoted in temperate climates is for grinding corn; in tropical climates, such as the West Indian Islands, they are employed for driving sugar-cane mills. In fenny and marshy countries, such as Holland or some of the eastern counties of England, they are used for drainage, either by working pumps or turning a wheel contrived for lifting the drainage water from the surface of the ground into canals at a higher level, by which it is carried off into the sea. In all situations, however, where the cost of fuel is not extravagantly great, steam-power has superseded that of wind, because its certainty of action more than repays the cost of its production. Districts the drainage of which is dependent on wind-power, may

frequently remain many weeks under water from the prevalence of calm weather, and the agricultural operations of the season may be so seriously interfered with that whole crops are lost, or

5885.

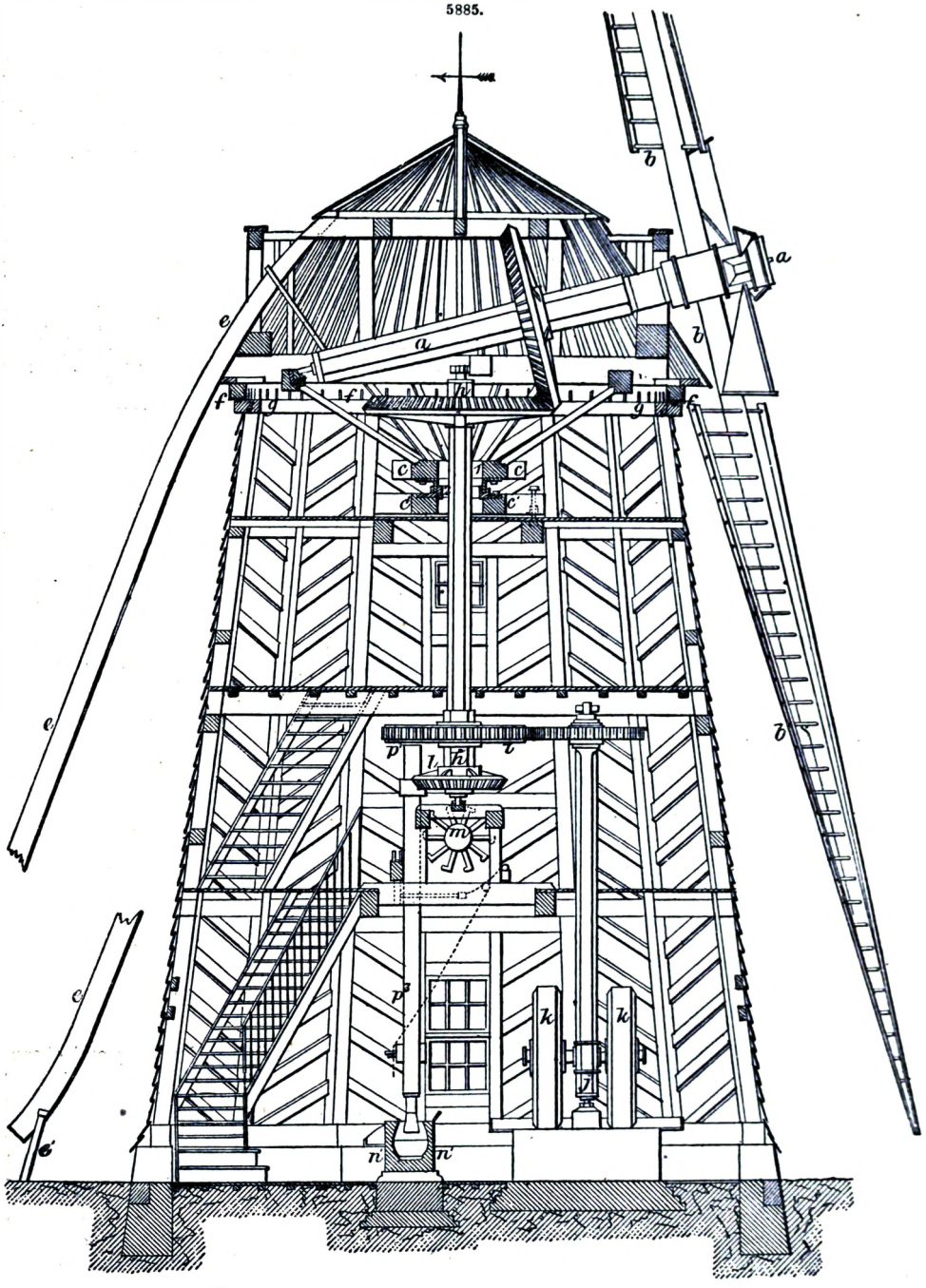

become immensely deteriorated. In sugar-growing countries again, the derangement of wind machinery by a hurricane or tempest may occur at the season when the sugar-canes have to be crushed; and the loss of a few days in crushing the canes may seriously damage the sugar in respect of quantity as well as quality. Upon the whole, then, whenever the cost of fuel is not excessive, it is not advisable to incur the outlay of extensive works for securing wind-power. A very small steam-engine, kept constantly in operation, is far more effective than a windmill of much greater power, because the latter is so variable and uncertain in its action. The only operations suited to wind-power are such as need not necessarily be completed at certain periods, but may be conducted occasionally as the wind may serve. Nor should the machinery driven by wind

require very nice regularity in its action; for, notwithstanding all the ingenious arrangements for equalizing the wind-force, it is still unsteady at the best.

Every part exposed to the wind should be greatly in excess of the strength required to resist the average strain to which it may be exposed. The tempest of an hour—nay, a momentary gust—may frequently destroy a windmill that has stood under ordinary winds for years; as a safeguard against too much strain, the windmill should always be left free to revolve, even if the machinery which it drives is thrown out of gear. The shaft or axis of the mill generally carries a large wheel, to which is fitted a strap of iron, loaded so as to press on its circumference, and act as a friction-brake either to hold the mill fast for purposes of repair during light winds, or to check its velocity when the winds are too strong for the work required.

Oil-mill Machinery, by Alex. Samuelson. Excerpt Proceedings Inst. M. E., 1858.—The means adopted for extracting oil in the last century by the natives of Ceylon, where cocoa-nuts and other seeds abound, were of the most primitive description; the apparatus, as illustrated in Fig. 5886, consisting simply of a few poles stuck into the ground, supporting two parallel horizontal bars A, A, between which was placed a bag B containing the seed or pulp of the cocoa-nut, from which the oil was to be expressed; a lever C was then brought to bear against one or both of the horizontal bars for the purpose of bringing them together, and thereby causing the required pressure upon the seed. This rude apparatus was one of the most approved oil-mills of that period. The pestle and mortar, Fig. 5887, was also used for the same purpose; and from the nature of these appliances the process was necessarily exceedingly slow and inefficient. Fig. 5888 is an improvement upon this apparatus. It is the invention of Hebert, whose object was to

5886.

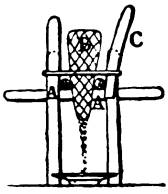

5887.

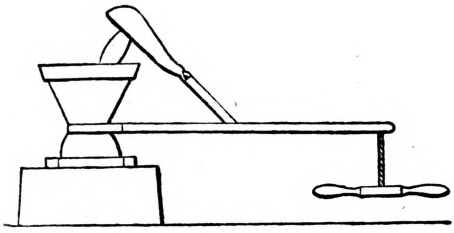

5888.

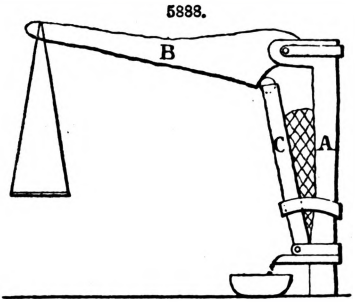

5889.

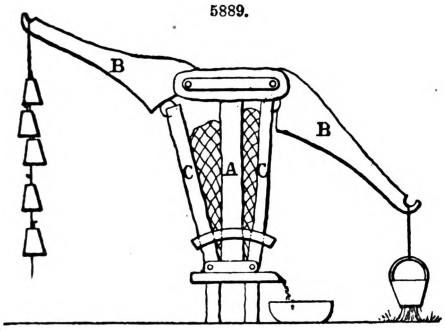

5890.

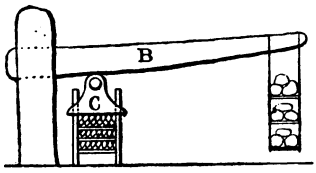

construct what he considered a powerful and effective machine, combining simplicity and cheapness with economy of labour. It consisted of an upright post A fixed firmly into the ground, the stump of a tree being often used, upon the lower and upper ends of which were projecting pieces, the upper one forming the joint of the long horizontal lever B, and the lower one the joint of the short vertical lever C, at the top of which was fixed a roller bearing against the under side of the horizontal lever B, for the purpose of diminishing the friction when the pressure was exerted upon the seed. The fixed upright post A and the vertical lever C in this instance formed the compressing portion of the machine. The pressure was obtained by the weight of a man suspended from the end of the horizontal lever B. A double machine, Fig. 5889, was also constructed upon the same principle, the pressure being obtained either by weights or by a bucket full of water, which was made self-acting in so far that as soon as the bucket touched the ground a valve was opened and the water escaped, relieving the seed from any further pressure. The advantage of the double machine was that it could be made portable and be moved about at pleasure, one-half of the press counterbalancing the other when both sides were in action, thus it was rendered independent of the ground. Another appliance of a similar description is shown in Fig. 5890; in this instance there was only one lever B, and the seed bags, instead of being placed vertically, were placed horizontally in a box C, upon the loose head of which the action of the lever was brought to bear by the same means of animate or inanimate weights. There is also another press deserving of notice, which is shown in Fig. 5891. The pressure is here gained by levers and weights B as in most of the foregoing examples, but with this modification, that cams C and wedges D are introduced. There is also a modification of this combined lever and cam machine, Fig. 5892, a press invented by John Hall, of Dartford, where the pressure is applied at the

end of the levers B by means of the steam-cylinder A. This apparatus is double, consisting of two pairs of boxes, the cams being placed opposite to each other, so that the operations of compressing the seed and refilling the bags may be carried on simultaneously.

5891.

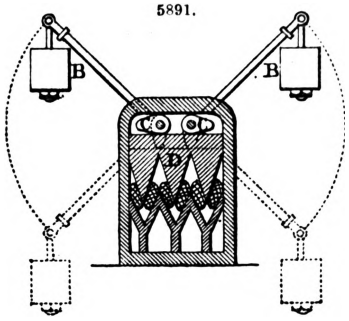

5892.

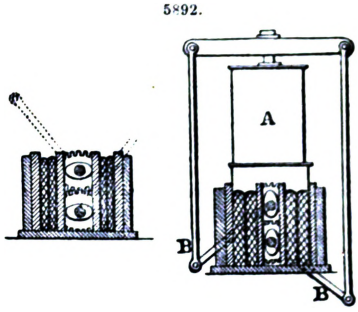

The more approved and modern presses for extracting oil are three in number;—the Dutch or stamper press; the screw press; and the hydraulic press. Before considering the comparative merits of these three presses, it will be advantageous to refer generally to the course of operations to be performed previous to the compression of the seed, which is the last of five operations that it has to undergo.

The first operation consists in passing the seed through a flat screen or shaker, which is kept in a constant state of agitation.

In the second operation the seed is passed through a pair of crushing rollers, which have the effect of bruising or crushing it. Fig. 5893 is a transverse section, and Fig. 5894 a plan, of a pair of these

5893.

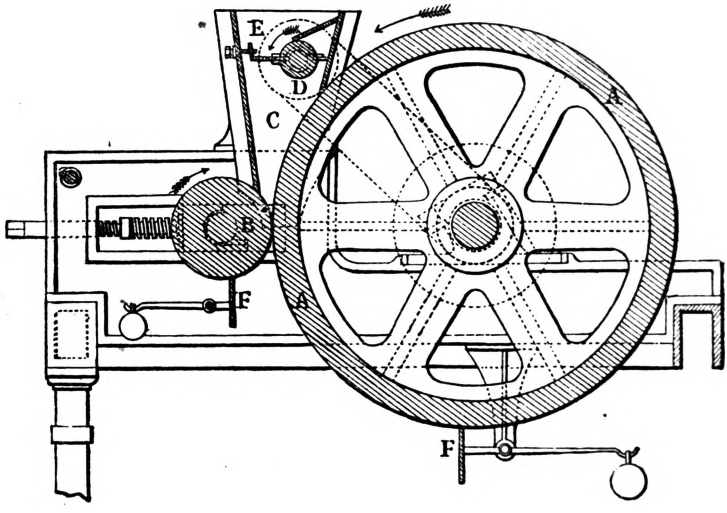

5894.

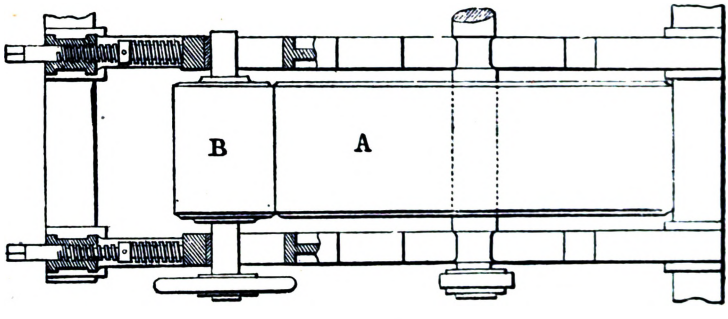

rollers. The two rollers are of unequal diameters, the larger one A being 4 ft. diameter, and the smaller B 1 ft. diameter, the breadth of both being 16 in., or 14½ in. on the face. The larger roller A makes fifty-six revolutions a minute, driving the smaller one by friction. The seed is supplied through the hopper C by means of a small roller D very slightly grooved, which is made to

revolve for the purpose of feeding the main rollers, being driven by a strap from the larger roller passing over a pulley outside the hopper; the amount of feed is regulated by the regulating plate and screw E. Underneath the rollers are placed scrapers F, kept in contact with them by weights, for the purpose of scraping off any seed adhering to the surfaces after crushing. These rollers for a long time were made of equal diameters; but it was found that they crushed the seed neither so well nor so expeditiously as they do in their present proportions. After the equal-sized rollers were found to be inefficient, that known as the Ipswich Mill was adopted, in which the larger roller was 6 ft. diameter and the smaller 1 ft. diameter, but experience proved that, when any hard substance got between the rollers, the leverage over the journals was so great that it caused much wear and tear upon those parts. Seed crushers have therefore by degrees adopted the medium-sized rollers, which are found to be exceedingly effective and not liable to derangement. A pair of rollers such as are shown in Figs. 5893, 5894, will crush, upon an average, about 4½ tons of seed in eleven hours, which is sufficient for two sets of hydraulic presses.

The third operation consists in grinding the seed under a pair of edge stones, Figs. 5895, 5896. Fig. 5895 is a vertical section, one of the stones being removed; and Fig. 5896 is a plan with one of the stones in section. Fig. 5897 shows the vertical driving shaft partly in section. The two edge stones A A are 7 ft. 6 in. diameter and 16 in. thick, bevelled to 11½ in. broad on the face, weighing together about 7 tons; the vertical driving shaft B makes about seventeen revolutions a minute. The seed is kept under the stones by means of the sweeper D, and at the proper period is collected and swept off by a second sweeper E, the slide

5895.

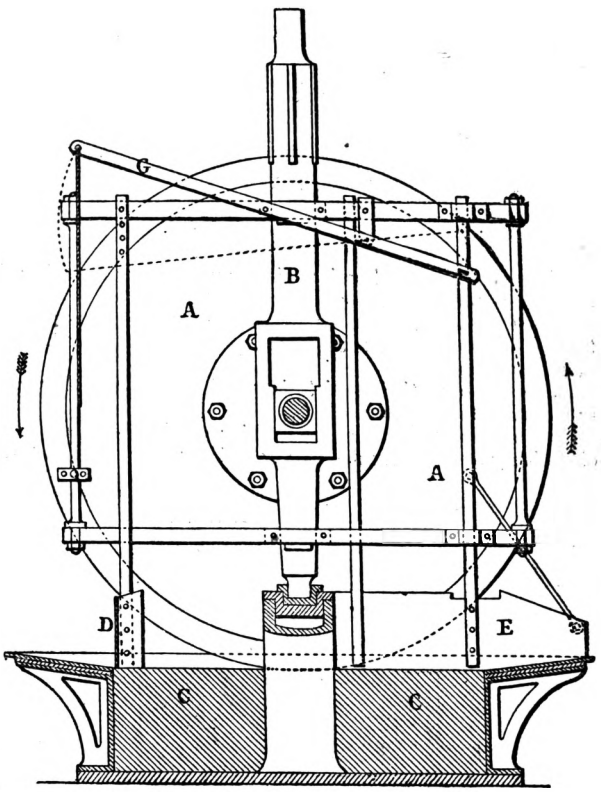

5896.

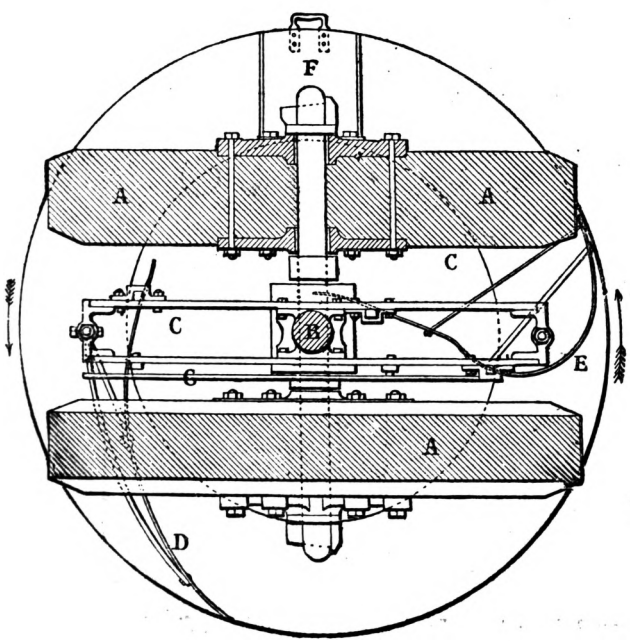

5897.

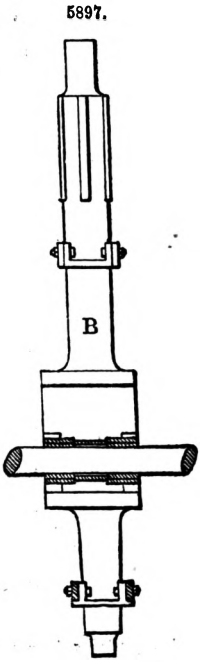

or cover F being withdrawn for its discharge; while the grinding is being performed, the sweeper E is raised from the bed-plate C, by the hand-lever G, as shown by the dotted line. The edge

stones, if of good quality and the seed not impure, require to be refaced about every three years, and will last from fifteen to twenty years according to their quality. One pair of edge stones will grind sufficient seed for two double hydraulic presses; the process of grinding lasts for about twenty-five minutes, previous to the seed being transferred to the next operation.

The fourth operation consists in heating the ground seed in the heating kettle, Figs. 5898, 5899. Fig. 5898 is a vertical section of the heating kettle, and Fig. 5899 a plan. The kettle is heated

5898.

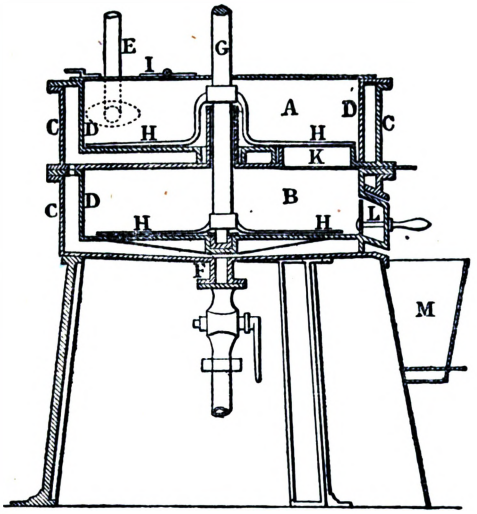

5899.

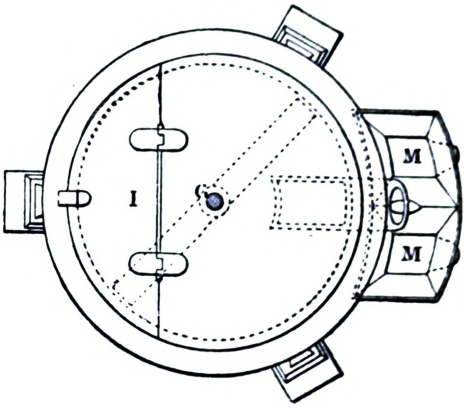

by steam, and consists of two cylindrical chambers A and B, one above the other, each of which is composed of an external casing C and an internal casing or inside kettle D, with a sufficient space left between the two casings round the sides and at the bottom to allow free circulation of the steam. The steam is admitted by the pipe E, and the condensed water passes off at F from the bottom of the kettle. The shaft G gives motion to two arms of stirrers H, H, in each chamber, revolving at the rate of thirty-six revolutions a minute, which keep the seed constantly agitated so that every particle of it may come in contact with the heated sides and bottom of the kettle. The upper chamber A is covered with a sheet-iron lid I, through which the kettle is charged. In heating the seed the upper chamber A is filled first, and the seed is allowed to remain in it from ten to fifteen minutes; the slide J is then withdrawn, and the seed falls through the opening K into the lower chamber B, where it remains until it is required to be taken to the press; the door L is then opened, and the whole of the seed is discharged from the chamber B by the action of the revolving stirrers H. The seed falls through a funnel M, under which is placed a bag of suitable dimensions to contain a sufficient quantity of seed to make a cake weighing 8 lbs. after the oil is expressed from it. Each of the chambers in the heating kettle will contain sufficient seed for charging one single press; the heating of the seed is therefore a continuous operation of first charging the upper chamber A, and then allowing the seed to pass into the lower one B, in which it is heated to 170° Fahr., and is then withdrawn and placed in the bags.

Fig. 5900 is another description of kettle, of a much simpler though less effective kind. In this case the seed is heated on a hot hearth A, being confined within a loose ring B; a spindle C with two arms upon it revolves inside the ring, keeping the seed stirred while it is being heated. When the seed has become sufficiently heated, the spindle and stirrers are raised a sufficient height above the top of the ring by the handle D; and the ring being loose on the hearth, the seed is drawn forward by it and scraped into the bag E. In this instance the seed is exposed to the atmosphere, and there is therefore a large amount of heat wasted. It is also liable to become overheated and spoiled, and upon the whole this is a more troublesome operation, as each ring holds only sufficient seed for one bag.

5900.

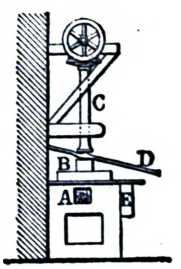

5901.

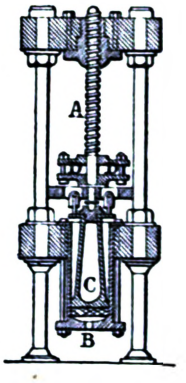

The bags after being filled are placed separately between what are called the hairs, which are bags made of horsehair with an external covering of leather. The same description of bags and hairs are used, whether the oil is expressed by means of the stamper, screw, or hydraulic press.

The final operation of expressing the oil is effected in the screw press, Fig. 5901, by means of an ordinary square-threaded screw A, by which the bag of seed is compressed between the bottom of the box B and the movable plate C. The power is applied by means of a loose lever inserted between studs fixed in the plates D, which are attached to the screw.

The press may be made in a vertical form, and may also be made to lie horizontally, and to be worked either by hand or by power. A very large amount of pressure may be obtained by one of these presses, but the wear and tear and derangement are excessive.

The stamper press, Fig. 5902, consists of a long rectangular cast-iron box A, open at the top, at each end of which there are two plates, between which one bag of seed B is placed, yielding a cake weighing 9 lbs.; next to one of the inner plates is placed a filling-up piece, then an inverted wedge C, then another filling-up piece, after which is introduced the vertical driving wedge D, and lastly another filling-up piece is inserted between the driving wedge and the other inner plate. As soon as the bags B have been placed vertically in the press-box in the usual manner, a stamper E made of wood, about 16 ft. long and 8 in. square with a fall of about 22 in. in the final stroke, is allowed to fall at the rate of fifteen strokes a minute, for a period of about six minutes, upon the head of the driving wedge D, which is sufficient to drive it down level with the top of the press-box A, the stamper being worked by two cams or wipers on the revolving shaft F. Side by side with the stamper E is a second stamper G, immediately above the inverted wedge C, which is held suspended at a fixed point by means of the lever H while the first stamper E is in action; but as soon as it is time to remove the bags, the stamper E is raised by means of the lever H above the point at which the cams come into contact with it, and by the same means the other stamper G which was previously suspended is allowed to fall upon the inverted wedge C, driving it downwards and thereby releasing the working wedge D, so that the attendant may remove the bags and repeat the operation. A press like this will not do more than about 12 cwt. of cake a day.

5902.

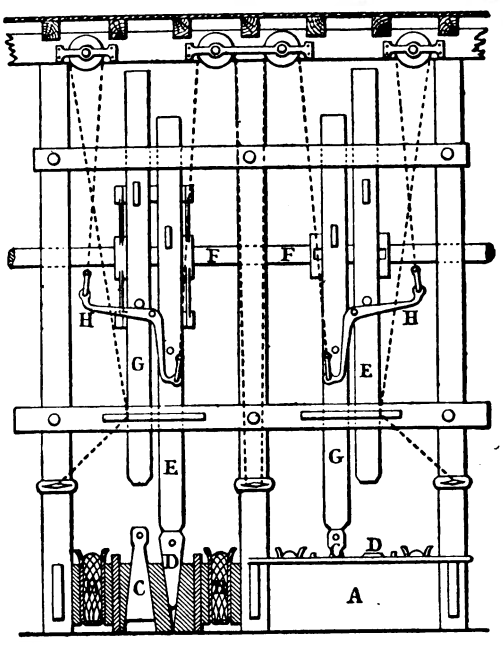

The last mode of expressing the oil is by means of the hydraulic press, which may fairly be said to be the most approved system that has yet been adopted. This press is simply Bramah's press arranged specially for the purpose of expressing oil.

Blundell's double hydraulic press is shown in Fig. 5903, and in detail in Figs. 5903 to 5906. Figs. 5903, 5904, are a vertical section of the press with an elevation of the pumps; Fig. 5905 a sectional plan of the press with a plan of the pumps; and Fig. 5906 a longitudinal section through the press-boxes. The double hydraulic press consists of two distinct presses A and B, supplied by two pumps C and D, one of which C is 2½ in. diameter, and the other D 1 in. diameter, both connected to each distinct press-cylinder by means of hydraulic tubing E. The stroke of each pump is 5 in., and they make thirty-six strokes a minute; the larger pump C is weighted to 740 lbs. on the square inch, and the smaller D to 5540 lbs. a square inch. The diameter of the press-rams F, Fig. 5906, is 12 in. and the stroke 10 in. Each press is fitted with four boxes G, G, and receives four bags of seed in the spaces H, H, producing in all a weight of 64 lbs. of cake at each operation. After the heated seed has been removed from the heating kettle and placed in the canvas and hair bags, which is done as speedily as possible, so that it may retain its heat, the attendant first fills one press A, and opens the communication between the large pump C and the charged press A by means of the valves I, which causes the ram to rise until there is a total pressure of about 40 tons exerted on the press; the safety-valve connected with the large pump C then rises, and is kept open by means of a small spring catch. Whilst this operation is going on in the first press A, the second press B is being filled in the same manner; the communication is then opened between the large pump C and the press B by means of the valves I, the safety-valve of the pump C having been replaced in its original position; the ram of the second press B is then raised to a corresponding position with that of the first press A, when the safety-valve of the pump C rises a second time. The communication between the large pump C and the press B is then closed, and at the same time a communication is opened by the valves I between the small pump D and the presses; and the extreme pressure exerted by the small pump D, amounting to about 300 tons, is allowed to remain upon the rams for about seven minutes from the time that they were first brought into action; this, together with three minutes allowed for emptying and charging the press, is the full time required for expressing the oil in the most effectual manner. The oil in leaving the seed passes through the canvas bag, and then through the hair bag, where it finds a free exit at the edges; thence it runs into a channel or groove K which passes round the upper portion of each press-box G; a communication is made from one box to another by means of piping L, so that the oil passes from the upper boxes through the lower ones, and thence into the cistern, which is called the spell tank, being just large enough to hold the produce of one day's work. These presses are not worked with water; it has been found that oil which is not of a glutinous description works much better, and keeps both the pumps and presses in a better condition. It is scarcely possible, if the presses are properly constructed, that they should meet with any accident; this can

only occur where through carelessness an excessive weight is placed upon the safety-valve levers, or where the valves themselves are allowed to stick through want of cleanliness, from the attendant not taking care to remove the oil which sometimes becomes clotted round the valves. Each of these presses is capable of producing 36 cwt. of cake a day of eleven hours, and the yield of oil may be taken at about 14 cwt. in the same time; this of course depends much upon the nature of the seed. The cake is trimmed or pared at the edges by means of a small paring knife, after which it is put into a kind of rack to allow it to cool and dry, so that it will not become mouldy when stacked. The oil is pumped from the spell tanks into larger tanks, capable of holding

5903.

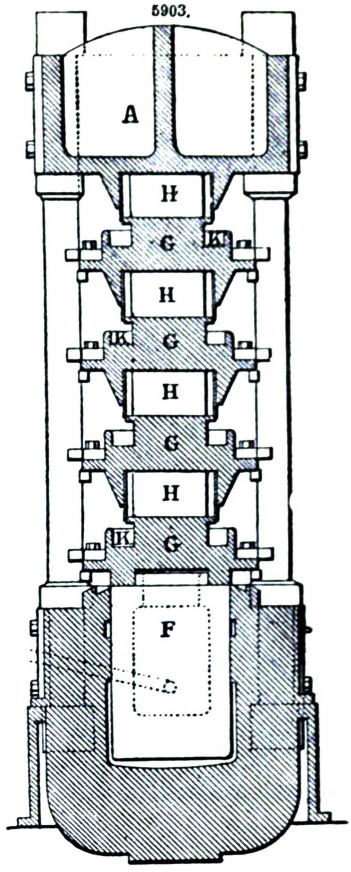

5904.

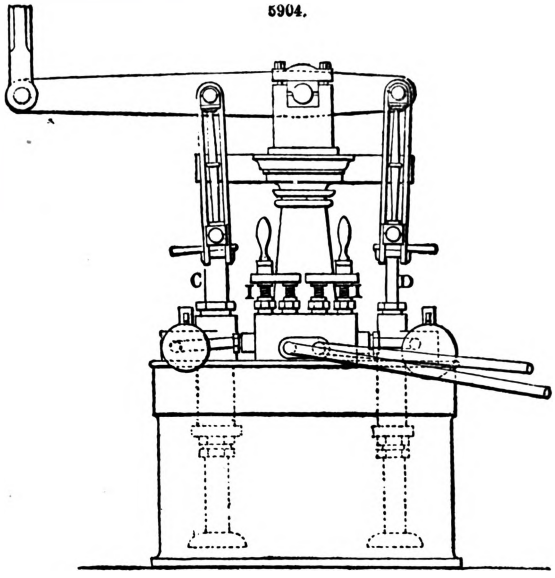

5905.

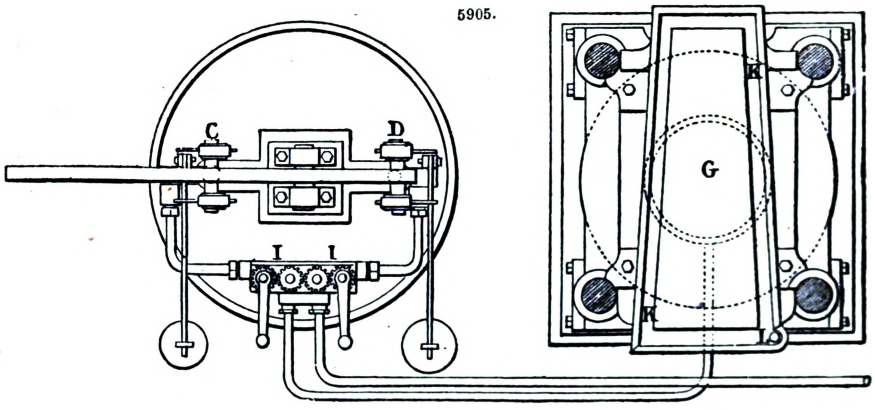

from 25 to 100 tons, where it is allowed to remain for some time for the purpose of settling, previous to being brought to the market in that condition, or to undergoing various other processes such as refining.

Figs. 5907, 5908, are an elevation and plan of a linseed-oil mill, by Martin Samuelson and Co., Hull. The whole of the machinery is driven from one main shaft, turned by a vertical steam-engine at one end. The preliminary process of shaking is here dispensed with, and the raw linseed, from St. Petersburg, weighing 52 lbs. a bushel, is in the first place passed through a pair of metal rollers 22 in. in diameter and 18 in. long, which are capable of rolling or crushing flat three quarters of seed an hour. For grinding, two stones are employed, of Derbyshire greystone, 7½ ft. in diameter and 16 in.

5906.

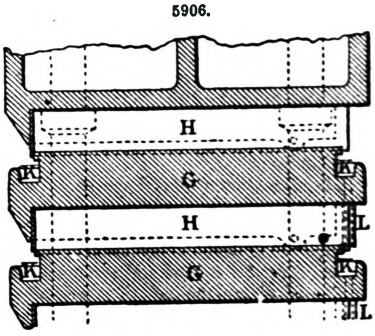

thick, bevelled off at the edges to 12 in. broad, and weighing 5 tons each; they run on a stone bed, with an iron rim or trough, which revolves and turns the stones on their axes, and round the vertical axis of the trough.

In the next or heating process, the kettles into which the seed is placed are constructed with steam-jackets or casings, from which they and their contents are heated to 90°, the seed being stirred by blades revolving on vertical axles. The bags into which the seed is measured from the kettles hold 10 lbs. of seed each, the horsehair wrappers into which they are deposited being 2½ ft. long. They are next placed in tiers of four bags each, in four hydraulic presses, making in all sixteen bags. The presses are worked in separate pairs, with two distinct double pumps to work them. The oil passes away by channels into the spell tank, which, as we have already stated, is just large enough to hold the produce of one day's operations. The oil is pumped from the spell tank into larger tanks, capable of holding from 25 to 100 tons of oil, where it remains for some time to settle.

5907.

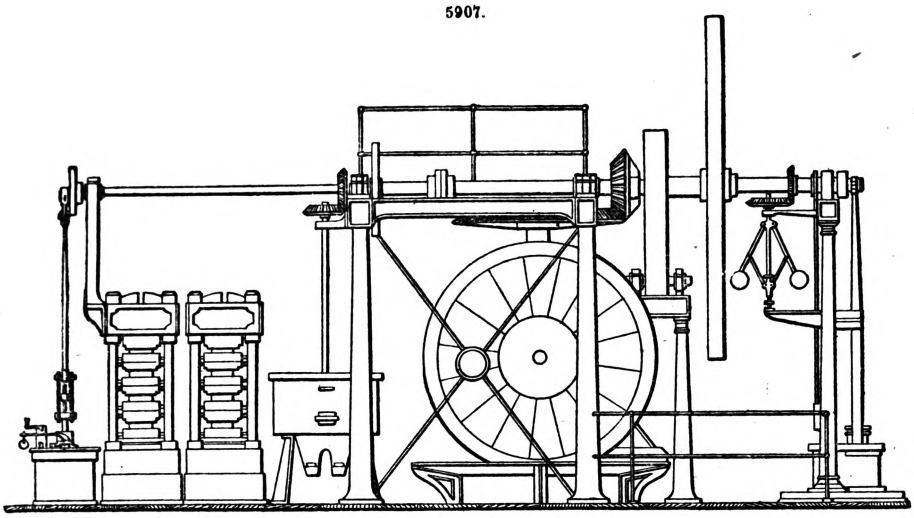

5908.

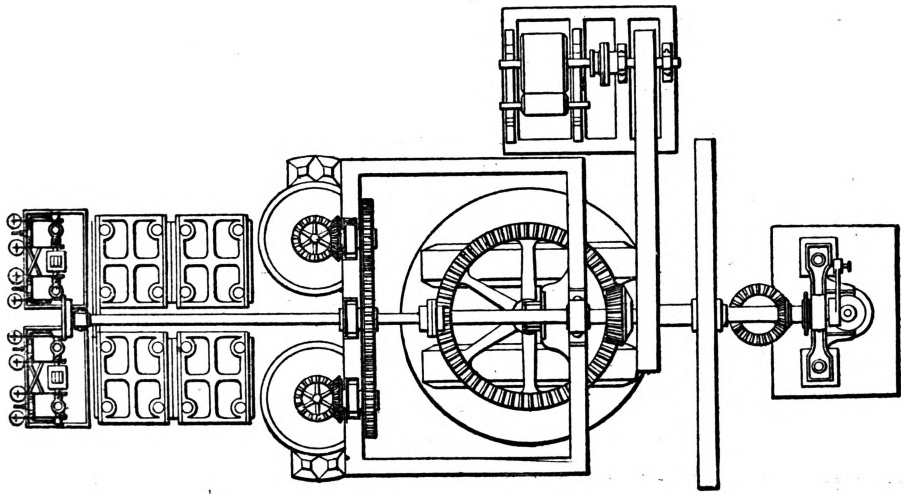

This oil-mill, Figs. 5907, 5908, is capable of crushing about 32 quarters of linseed a day of twelve hours. It produces from that seed from 4½ to 5 tons of oil-cake, and about 2 tons of oil. The total weight of the machinery is from 50 to 60 tons.

Flour-mills.—The four methods at present in use for producing flour are by the Buchholz system, the Hungarian system, by Carr's disintegrator, and by the ordinary English plan of grinding by millstones.

Thomas Carr's disintegrating flour-mill, as described by him before the Institution of Mechanical Engineers in 1872, is shown in Figs. 5909 to 5911; Fig. 5909 is an external side elevation of an entire machine, 7 ft. diameter; Fig. 5910 a transverse section taken through the centre of the machine; Fig. 5911 a longitudinal section of the two rotating discs with a portion of their respective shafts; Fig. 5912 shows a portion of the transverse section to a larger scale.

The machine consists of a pair of circular discs A and B, Fig. 5909, rotating in contrary directions upon two shafts D and E situated in the same line; the opposing faces of the discs are studded

5909.

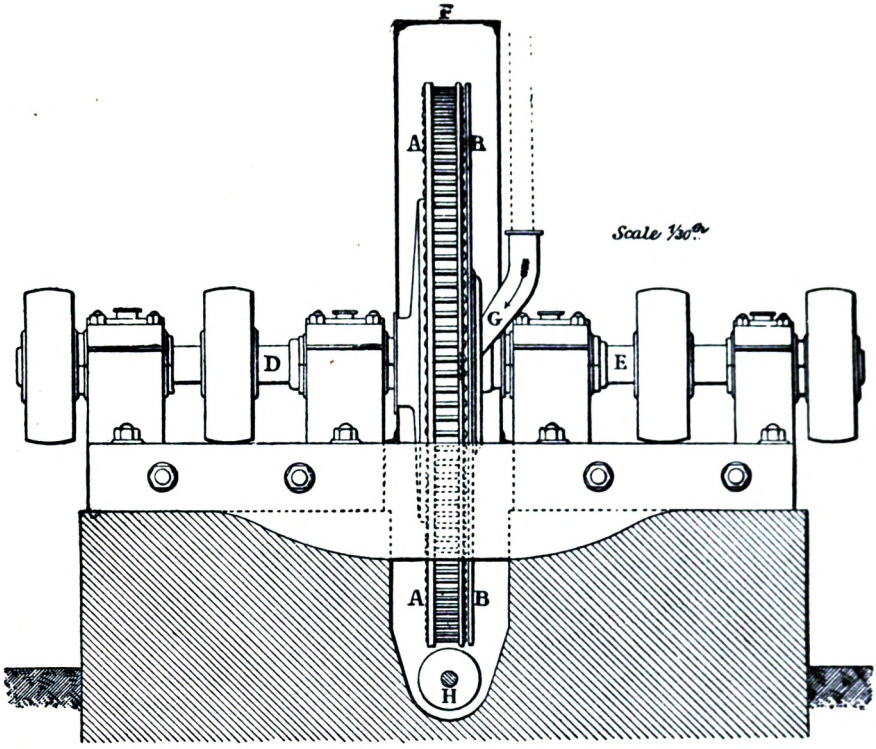

Scale 1/30th

5910.

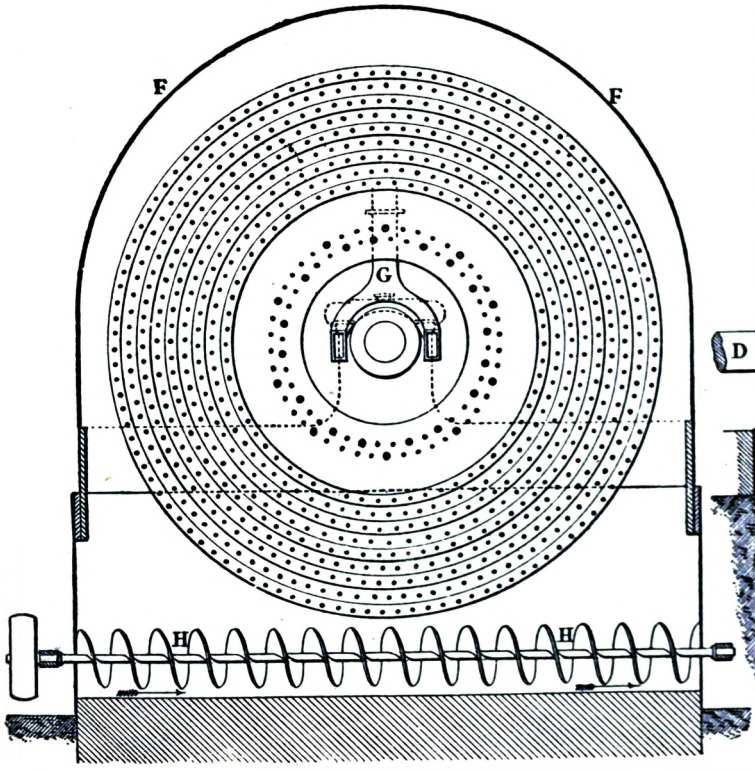

5911.

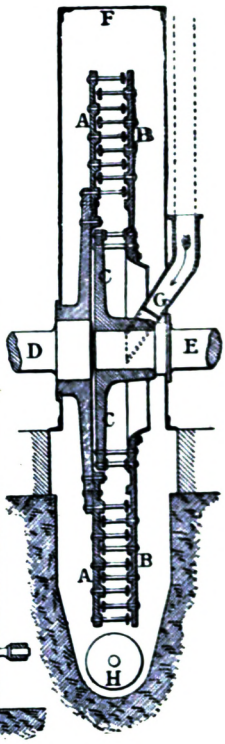

5912.

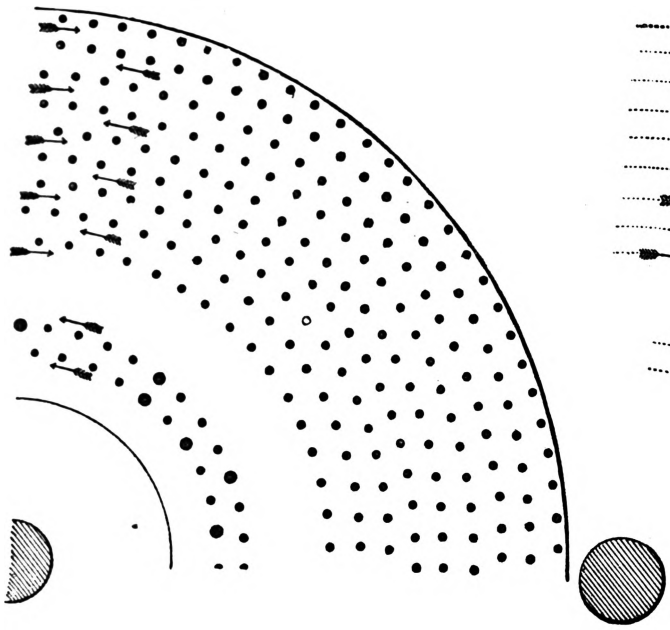

5914.

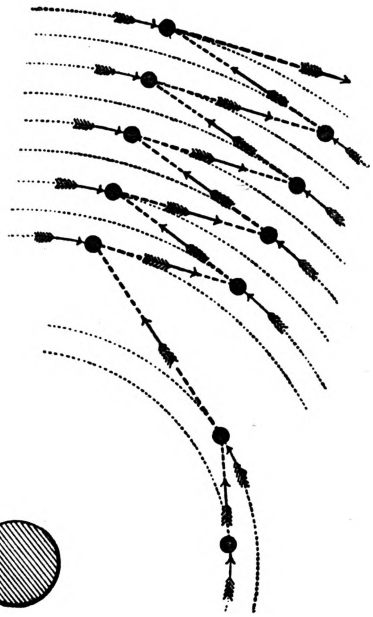

5913.

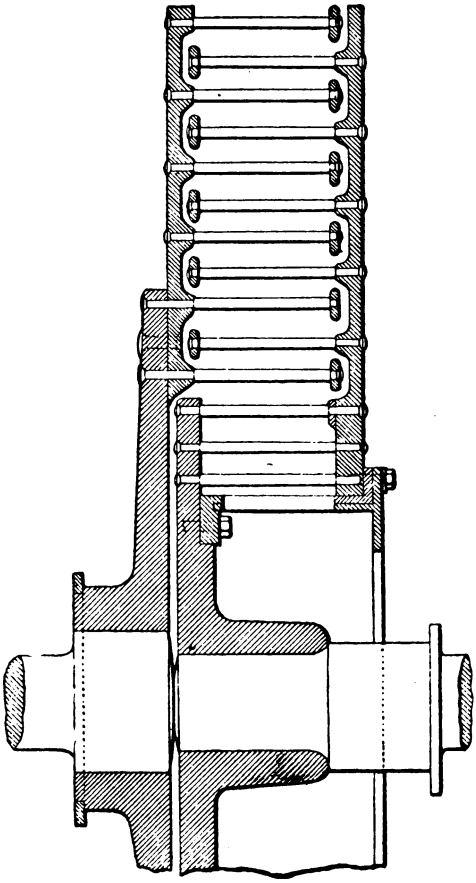

5915.

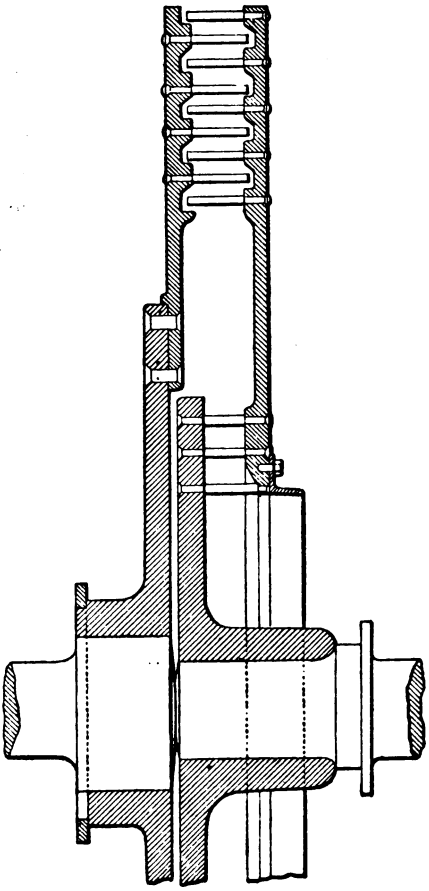

with a series of short projecting bars or beaters, arranged in successive concentric rings or cages; and the rings of beaters fixed in one disc intervene alternately between those fixed in the other disc, and revolve in the opposite direction. The solid circular disc A, keyed on the left-hand shaft D, Fig. 5911, carries the third cage or ring of beaters, counting outwards from the centre, and also the fifth, seventh, ninth, and eleventh cages, all of which therefore rotate the same way. On the right-hand shaft E is keyed a small inner disc C, into which are riveted the bars of the two innermost cages of beaters, their other ends being riveted into the right-hand annular disc B, which is thus carried by them; this annular disc in turn carries the fourth, sixth, eighth, and tenth cages, which with the two innermost all rotate in the contrary direction to the cages carried by the left-hand disc A, as indicated by the arrows, Fig. 5912. The two innermost cages are both fixed in the same disc, so as to rotate both in the same direction, in order thereby to ensure distributing the material more effectually through the machine by the centrifugal force. The cages of beaters are of successively increasing diameters; and consist of ½-in. round steel bars, with clear spaces between of about 2 in. in each direction; the outer ends of the bars in each cage are tied together by a ring, shown in Figs. 5910, 5911, and to a larger scale in Fig. 5913.

The two shafts D and E are placed in a line, their rounded ends just touching each other, or nearly so, in the centre, Fig. 5913; everywhere else ample clearance is allowed for enabling the two halves of the machine to rotate entirely independent, acting only in unison as auxiliary to each other in pulverizing the material that is being operated upon. The shafts are each mounted in two plummer-blocks on a heavy square bed-plate; and a driving pulley is keyed either in the middle of each shaft or at its outer end, as may be found most convenient for the driving straps, one of which is a crossed strap and the other an open one, so as to drive the two halves of the machine in opposite directions. The revolving cages of beaters are enclosed within an external casing F, Figs. 5909 to 5911, which has a centre opening in the right-hand side, corresponding with that of the annular disc B.

The grain is delivered down a fixed shoot G, Figs. 5909, 5911, through the centre opening of the outer casing, into the innermost cage, from which it is instantly projected through the machine, and delivered in a radiating shower from every portion of the circumference into the outer casing, in the form of meal, similar to that thrown out by the ordinary millstones; to this state the grain is reduced almost instantaneously by being dashed to the right and left alternately by the bars of each of the successive cages revolving in opposite directions at a very high speed. As it falls to the bottom of the casing, the meal is continuously removed by the ordinary rotating screw H, Fig. 5910, used in flour-mills; it is then passed through the usual bolting machines to separate the bran, and subsequently through silk dressing-machines to separate the fine flour from the semolina. The latter is then winnowed by an exhaust current of air in a machine for that purpose, so as to free it from all finely-powdered bran, and is afterwards ground between millstones, of which three or four pairs are kept for the purpose; the flour resulting from it is added to the fine flour produced at the outset by the disintegrating flour-mill, and to ensure perfect intermixture the two are then passed through the silk dressing-machines together.

The course of a particle through the disintegrator is illustrated in the diagram, Fig. 5914; the circular arrows show the reverse direction in which the alternate cages rotate, and the straight arrows at different angles show the zigzag course of a particle of material as it flies off at a tangent from each cage, being struck alternately to the right and left, and projected thereby at a speed equivalent to that at which the bars of the cage last striking it were rotating; the force of each blow is thus increased by the momentum of the material, which is moving in each case in an opposite direction to that of the beaters it next meets with. As the material becomes more finely pulverized in its course outwards through the machine, and the particles have consequently less inertia of themselves to act as an abutment for receiving the blows of the beaters, a greater force of blow is necessary, in order to continue the pulverizing process. This increased force is supplied by the higher velocity arising from the larger diameters of the successive rings of beaters which the material meets with in its passage outwards. The machine is driven at a speed of about 400 revolutions a minute; and the outermost ring being 6 ft. 10 in. diameter, the last beaters have a velocity of 140 ft. a second, or about 100 miles an hour; this is double the velocity, and consequently gives four times the force of blow of the innermost ring of beaters, the force of blow being proportionate to the square of the velocity.

In this mode of action, by the free blows of the beaters upon the material, the friction and compression between the machine and the material, which are involved in all grinding, crushing, or stamping processes, are avoided, this mill being the only machine that does not act upon the material between a pair of surfaces; and as the beaters do not strike upon any solid abutment, the whole power employed is usefully expended in pulverizing the material, excepting only the portion of the power absorbed by the resistance of the air to the rotation of the beaters. This mill has the advantage of unusual freedom from risk of injury by the accidental introduction of any unsuitable substances, such as pieces of metal; any such substances are freely ejected by the centrifugal force, without the possibility of any squeezing action being exerted upon them. The machine has not any tendency to become choked, nor are any working parts liable to get out of order, as the two sets of beaters revolve entirely clear of each other, and the beaters never come in contact with anything but the free particles of the material that is being pulverized. The beaters being of steel, and coming in contact only with the grains of wheat, are not subjected to any perceptible wear, and keep at work continuously without ever requiring any dressing or attention. But with the ordinary millstones, a surplus supply of stones, amounting to one-eighth of the whole number, has always to be kept out of work, to allow for the dressing and sharpening which is usually required to be done upon each pair of stones after about every four days' work.

Two of these disintegrating flour-mills in regular work for twenty-two hours a day at the Bonnington Mills of Gibson and Walker at Edinburgh have proved successful during a year's continuous work.

The work regularly got through by each machine of 7 ft. diameter amounts to 20 quarters of wheat or 160 bushels an hour; which would require as many as twenty-seven pairs of ordinary millstones in full work, taking the average duty of each at 6 bushels an hour. A further supply of three or four pairs of stones under the dresser's hands would be required for keeping that number at work; but these are compensated for by the three or four pairs of finishing stones which are used with the disintegrating mill for grinding the granular portion called semolina, as before explained.

The disintegrating flour-mills at present in use are made with fourteen rotating cages, as in Fig. 5913, instead of only eleven cages, as in Figs. 5909 to 5911; but the fourteen have been found to be more than are necessary, while one mill also in use that has only eight is found scarcely sufficient. The beaters are also made much shorter now than those hitherto used, being only 3 in. long in the clear, as in Fig. 5911, instead of 8 in. as in Fig. 5913, in order to bring the discs so much nearer together, and diminish proportionately the loss of power in churning the air, which was found in the experiments made at Edinburgh to be more serious than had been at all anticipated. The capacity of the machine with the reduced width will still be far beyond the requirements, when operating on only 20 quarters of wheat an hour; for the velocity of the material in passing through the mill is so great that a mere fraction of a second elapses from entrance to exit of any given particle, and hence there can never be more than a few handfuls of the material in the machine at any one instant. In other new machines at present making, the bars being now but little more than mere pegs, the tie-rings at their extremities are dispensed with, Fig. 5915, being no longer necessary for so light and small a material as wheat. By the omission of these tie-rings the successive circles or cages of beaters can be placed much nearer the circumference, whereby their respective diameters, and consequently their speeds in feet a second, are proportionately increased. The machine is remarkable for its simplicity of construction and non-liability to deteriorate in efficiency in consequence of wear, and for its large production and the superiority of its work; and also for the very small space it occupies, in comparison with that taken up by the twenty-seven pairs of ordinary millstones which are required to perform the same amount of work.

Buchholz Process.—In order to render clear the operation of the Buchholz machines, states W. Proctor Baker, to whose paper in the Proceedings Inst. M. E., 1872, we are indebted for our information respecting this process, a brief description is desirable of the nature and structure of the grain to be dealt with. The covering or skin of the wheat is composed of three different layers or coats, as shown in the magnified diagrams, Figs. 5916, 5917. Within these is the true grain, consisting of the central floury body of the corn, the germ or embryo, and two membranes. The central body of the corn is built up of minute flour-cells of irregular shapes; and all the other portions of the grain together compose the bran. The three outer coats and the outer of the two membranes are composed principally of ligneous tissue, and constitute 3 to 5 per cent. of the whole grain.

5916.

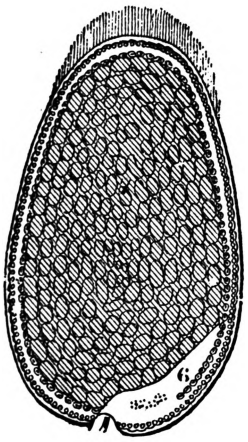

5917.

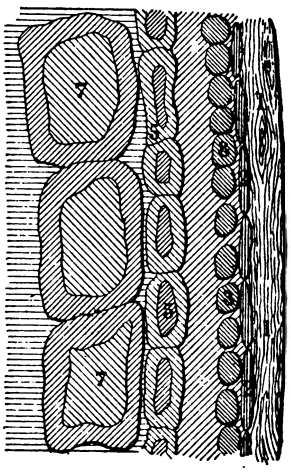

Literal Reference;—1, Epidermis; 2, Epicarpis; 3, Endocarpis; 4, Testa membrane; 5, Embryo membrane; 6, Embryo. These form the Bran,—7, Perispermum;—Flour-cells.

The inner of the two membranes surrounding the floury body of the grain contains in its cells the principle named cerealine, which was discovered some years ago by the French chemist, Mège-Mouriès, by whom it has been shown that the good or bad colour, the fineness of texture, and even the flavour of bread, depend upon the absence or presence of cerealine in the flour, and that flour not containing cerealine makes better bread than flour in which it is present. Practically, flour containing cerealine produces bread of a brown colour, and the bread becomes browner as it becomes stale; while flour free from cerealine produces white bread, which retains its colour unimpaired for a length of time. Cerealine is believed to exist in all parts of the grain, and it varies in colour according to its position in the corn; but the most noxious cerealine is contained in the cells of the innermost membrane, and its dark black character is rendered apparent by mixing bran with white

flour; the result in baking is not, as might have been expected, white bread with flakes of bran in it, but a distinctly brown loaf. The flour from the centre of the grain is the finest and best, that obtained from the layers near the membranes is inferior.

The object of the Buchholz process is to produce what may be termed true flour, that is, the substance contained in the central body of the grains of wheat, so extracted from them that it is free from any admixture of the coats, and as free as possible from cerealine, and is in a fine granular state, not crushed to powder by pressure or smashing. In contrast with this pure substance, the flour of commerce is really a fine meal, consisting of a mixture of true flour, bran, and dust; and there are no means in existence by which these various substances can be separated after once they have been mingled together. The object to be attained in the Buchholz system is therefore to remove so much of the coats of the grain as can be taken away without risk of injuring or removing any portion of the more valuable substance of the interior. There is no reason why the attempt should not be made to strip the coat off the grain by the same process by which the interior portion is reduced to flour, and at the same time at which the reduction is effected. To accomplish the process of decortication numerous plans have been tried, and many different machines invented, some of which have done their work well for a time; but sooner or later the grain operated upon has proved too strong and hard, and the machines, if their work was perfectly done, have always worn out, whatever their construction, or whatever the materials of which they were made.

5918.

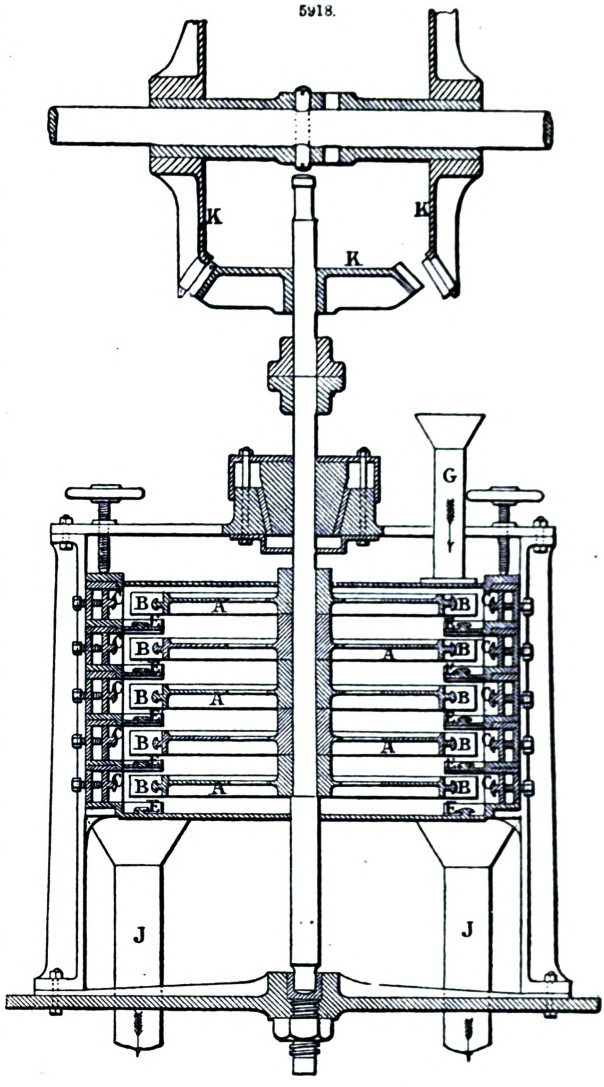

The hulling machine, Figs. 5918 to 5920, has been invented and constructed by Buchholz to overcome these difficulties; and after considerable experience it has been found to do its work with thorough efficiency, and to stand the test of wear. It consists of a series of revolving cast-iron discs A, fixed on a vertical spindle, making about 350 revolutions a minute, and furnished all round the circumference with thin hard steel blades B, set radially and at right angles to the plane of the disc. These blades, of which there are twelve to sixteen to the inch, are separated by pasteboard packings a little smaller in width and length than the blades, so that the edges of the latter project, as in Figs. 5921, 5922. In the course of time the steel blades wear down, so that their edges become level with the pasteboard packings, and these are then cut away in order to expose again the edges of the blades. The discs revolve within a cylindrical casing, which is lined on two opposite sides with steel blades C, C, Figs. 5918, 5920, similar to those on the discs, a clearance of $\frac{3}{8}$ to $\frac{1}{2}$ in. being left all round the

5919.

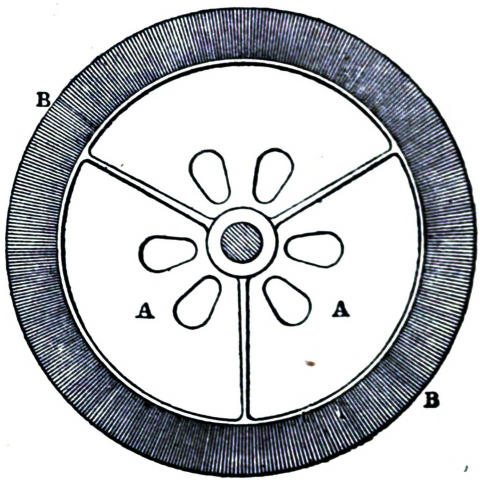

discs; and the casing has open wirework D, D, in the two intervening portions of the circumference, Fig. 5920. Between each revolving disc is a fixed annular disc E, furnished on its upper side with a similar arrangement of steel blades, and situated just below and above the circle of blades in the two adjacent revolving discs, thus dividing the machine into a series of horizontal compartments. Holes F, F, are made at intervals in the annular discs, and are closed to any required extent by regulating slides I, I.

The grain, fed in through a pipe G in the cover of the machine, Fig. 5918, passes down between the edge of the blades B on the first revolving disc and the fixed blades C and E in the casing; and then passes down through the holes F into the next compartment below, and so on through the successive compartments to the bottom. A portion of the skin is removed from the grain by the action of each revolving disc, and the particles cut off escape through the wirework portions D, D, of the casing, Fig. 5920, a constant current of air being made to pass down through the machine for aiding their removal. The regulating slides I closing the holes F in the fixed annular discs, Fig. 5920, afford the means of retaining the grain a longer or shorter time under the action of the blades in each compartment of the machine, and brushes formed of plates of sheet india-rubber are inserted in the casing at H, H, for pressing the grain close up against the revolving discs. The cleaned grain is delivered at the bottom of the machine into the spouts J, J, Fig. 5918. The machine being built up of a series of compartments, all precisely the same, its cutting power can at any time be readily increased or diminished according to the nature and quantity of the grain under treatment, by increasing or diminishing the number of the compartments.

5920.

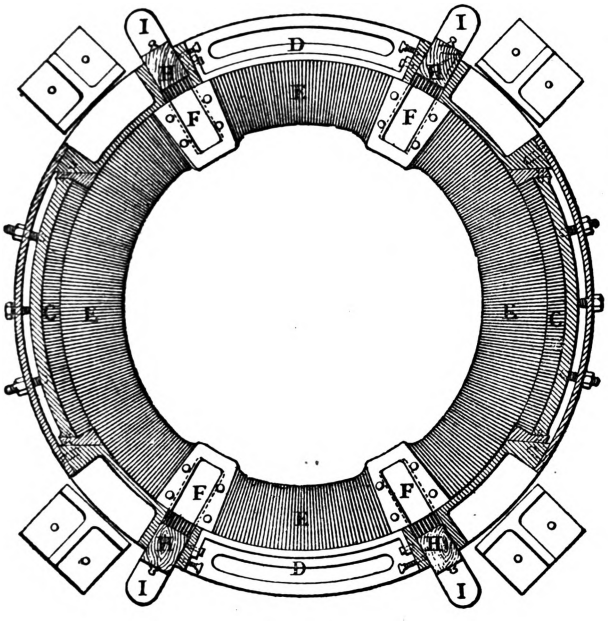

5921.

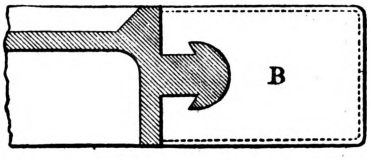

5922.

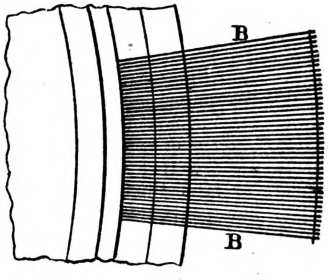

In order that the hulling machine may continue in an efficient working condition, it is necessary that the edges of the blades should always be sharp; and such is the hardness of the coat of the wheat grain that the keenness of edge is taken off the steel blades in a few hours; but while the sharpness is being worn off the front cutting edge of the blades, a sharp edge is being set up on the opposite side of the blades so that it is only necessary to reverse the direction in which the discs rotate in order to bring the sharpened back-edges to bear upon the grain. The machine is supplied with reversing gear K, Fig. 5918, and in practice the direction is reversed about every twelve hours, the machine being thus self-sharpening.

The cutting action of the hulling machine is perfectly under control, so that either a large or a small quantity of the skin of the grain can be removed, as desired. It is possible with this machine to remove absolutely all the brown matter from the grain, preserving perfectly the shape of the grain and making on waste of flour. Many other machines are excellent polishers of grain, removing the outer skins to the extent of 1 or 2 per cent. of the whole grain; but as these outer skins are nearly transparent and colourless, the advantage gained is not very great. What is required for real utility is that the inner membrane of the coat of the grain should be cut into, and as much as possible of it be removed. A substantial advantage is gained only by the removal of a considerable quantity of the covering, to the extent of at least 7 per cent. of the whole grain, or more; for the worst and most deleterious of the cerealine is then got rid of. The appearance of the parings obtained by the use of this huller shows the utility of removing them from the wheat. They form a dark soft greasy substance; and the presence of any of this, even the most minute portion, in flour, is ruinous to the appearance and quality of bread. It is, however, a most excellent food for cattle and pigs, and its market value is about the same as that of bran; so that there is scarcely any loss by its removal before grinding the wheat. As it is very important that the wheat should be completely freed from the most minute particles of this noxious dust, before it is ground, the

wheat delivered from the huller, with so much of the dust as has not been driven off through the wirework of the casing, is led to a separator covered with wire, to sift out every particle of dust; and it is very useful to expose the stream of wheat to the action of an exhaust fan, to carry away any floating particles.

The hulling machine occupies little room; it requires little attention after it has once been set properly to work, and it will work for twelve months without requiring repairs; when worn, all that is wanted is a new set of blades, which can be refitted expeditiously and cheaply. The power required to drive the huller varies with the description of the wheat passing through it; about 10 to 12 horse-power is required to drive a machine that will decorticate about 4 to 5 quarters of wheat an hour. The whole of this power, however, is saved in the subsequent grinding process, if the wheat be ground in the decorticated state; for having then been deprived of its hard tough skin, it breaks down far more easily than wheat in the natural state, and a pair of millstones grind a far larger quantity an hour, and require much less power to drive them. The commercial value of the operation of this hulling machine varies with the quality of the wheat used. The worse the wheat, generally speaking, the more is it improved by this process; and the very brown Danube, Banat, and Russian wheats are those upon which the greatest gain accrues. On the better qualities —American, Baltic, and other red wheats—the advantage is less, and with fine white wheats it is least. The superiority in quality of the flour produced is not only in its colour, but also in its smoothness of texture and strength; and the hulling machine is therefore by itself of great value, even in cases where the wheat is ground at once on leaving the huller, without undergoing the further process about to be described.

The hulling machine is not intended to remove the whole of the interior membranes of the grain, for if that were done, the central flour-globules would be exposed to the action of the blades, and a portion of the best part of the corn would be cut away and mixed with the worst part. The next object, therefore, is to separate the central portion of the corn from the remaining membrane; and the most simple way would appear to be to scrape this fine internal portion off the membrane, leaving the cells containing the cerealine undisturbed in the form of bran. This is what is accomplished in the next stage of the Buchholz process; the grain is ripped open, and the flour-cells are torn and scraped away from the bran.

Figs. 5923 to 5926 are of the semolina mill, by which these operations are performed; semolina signifying a material which has been half ground. The chief feature of the machine is that its operations are effected by a series of pairs of grooved steel rollers L, L, running at differential speeds; these are shown to a larger scale in Figs. 5927, 5928. The first pair of rollers, at the top of the mill, do that which has been described as ripping open the grain; and for this purpose the surface of each roller is cut into diamond points, nine to the inch, as shown full size in Figs. 5929, 5930. The remaining pairs of rollers are all intended by cutting and scraping to tear away from the bran the interior portions of the grain. These rollers are therefore grooved longitudinally, as shown full size in Figs. 5931, 5932; there are eighteen grooves to the inch in the upper rollers, and the lower ones are gradually finer grooved, up to twenty-eight to the inch.

5923.

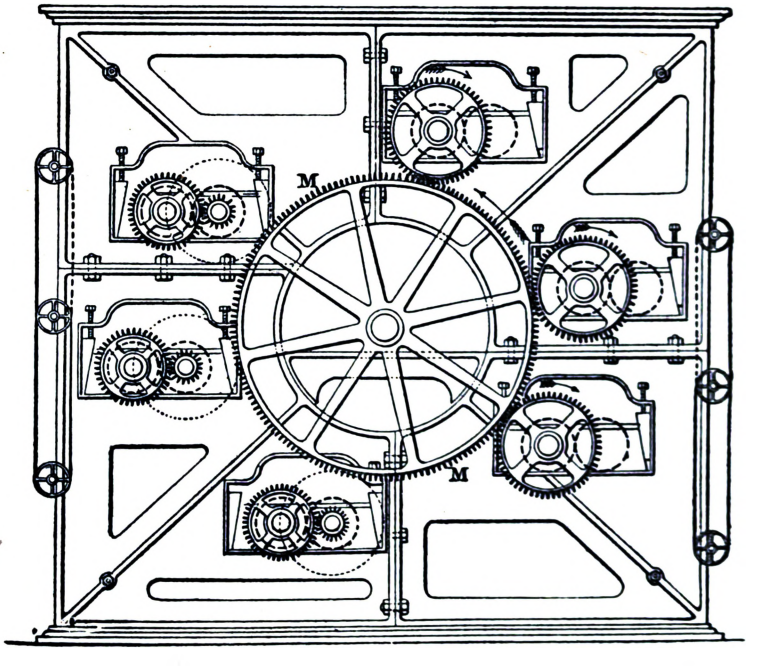

The best arrangement of this mill is to place the rollers as in Figs. 5923, 5924, so that the fast rollers of each pair can be driven from central shafts by spur-gearing M, the slow roller of each pair being driven through spur-wheels by the fast one at exactly one-third the speed; and the slow roller

5924.

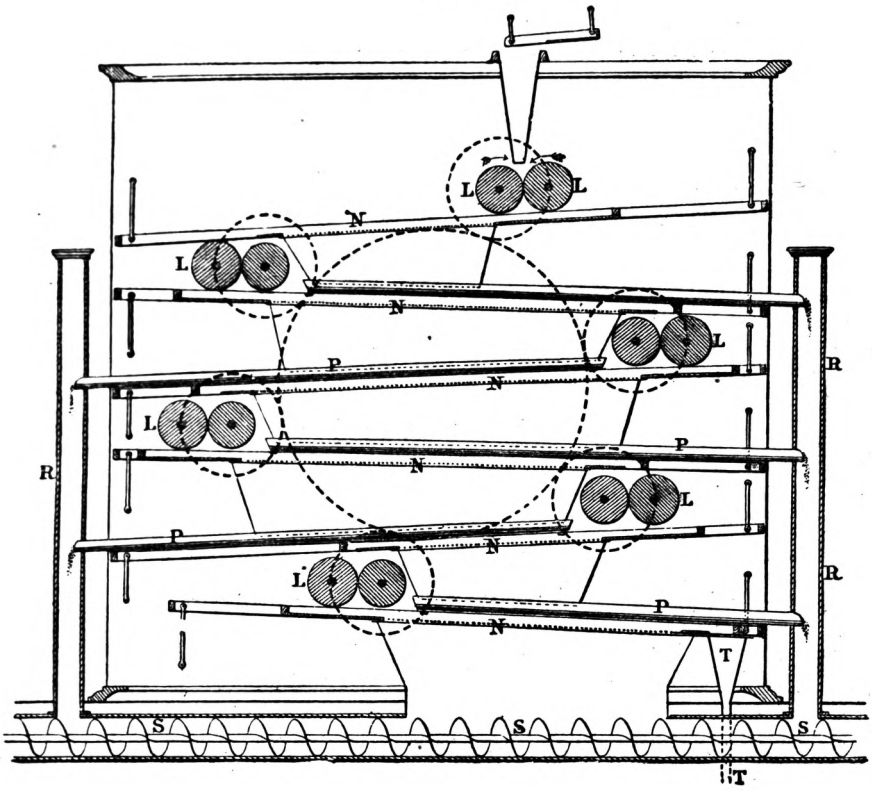

5925.

End Elevation.

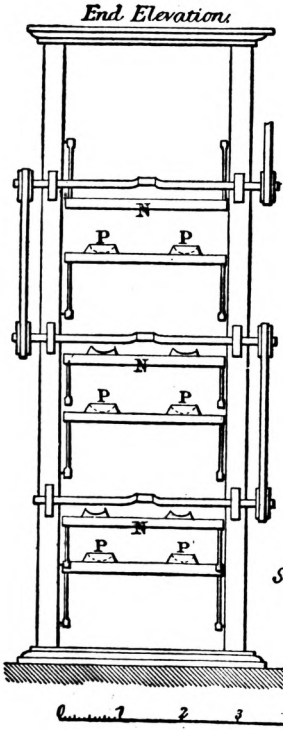

5926.

Transverse Section.

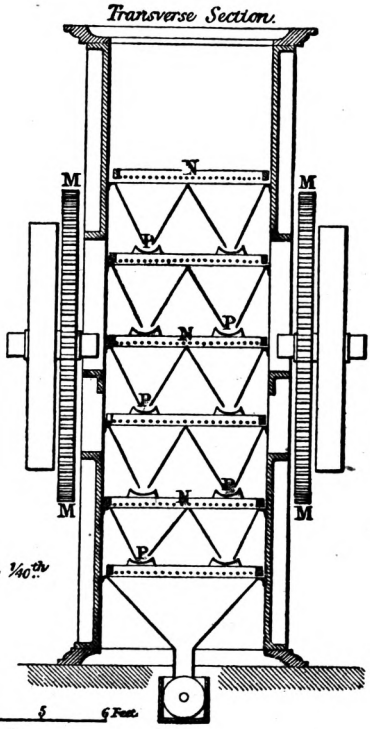

Scale 1/40th.

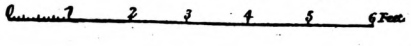

5927.

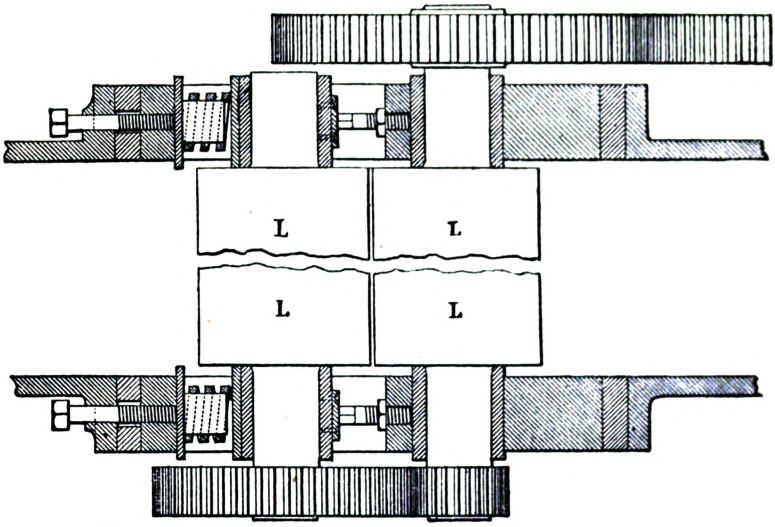

5928.

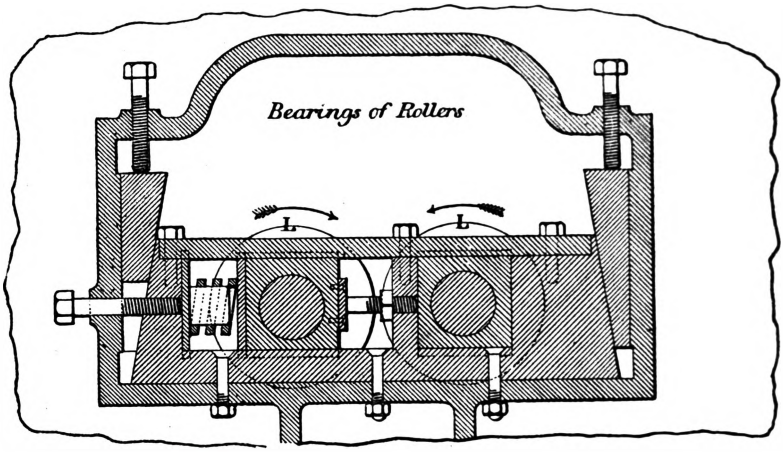

5929.

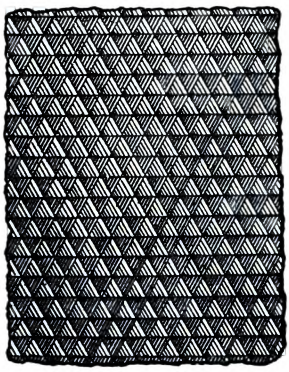

5930.

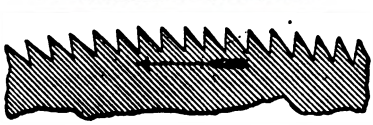

5931.

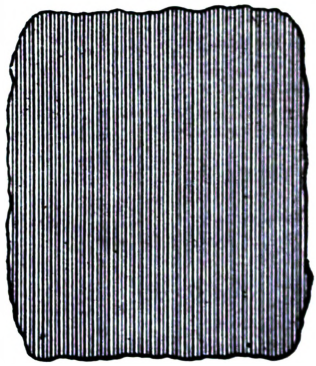

5932.

in each pair runs at from 100 to 110 revolutions a minute. Under each pair of rollers is an oscillating sieve N, Figs. 5924 to 5926, to receive the stuff which has passed between the rollers; the semolina and flour scraped off by the rollers pass through the sieve, while the larger bran passes over the tail of the sieve to be further scraped again by the next pair of rollers, and so on through the whole series. The semolina and flour passing through the sieves fall into the troughs P underneath, and are delivered by the spouts R to the traversing screw S at the bottom of the mill, by which they are conveyed away to the dressing or sorting reels. The bran finally discharged from the tail of the bottom sieve is conveyed away separately by the spout T.

Semolina is produced on the Continent by breaking down wheat between millstones kept at such a distance apart that they cannot reduce the grain to flour at one grinding. The grinding has therefore to be repeated several times before the semolina can be detached from the bran; and then by a laborious process of sifting by hand labour or by ventilation the semolina is separated from the bran. The objection to this plan is, that while only a small proportion of semolina can be obtained by it, a considerable quantity of flour of very poor quality is unavoidably produced, its inferior quality being due to its being mixed with the very small and fine particles of bran which have been chipped off in grinding; and these particles of bran contain the most considerable portion of the noxious cerealine. At the same time, the pressure necessarily employed in grinding has the effect of crushing some of the flour-globules to dust, which is the most certain method of destroying their good qualities for bread-making. The millstone is indeed but a blunt instrument, and can do its work, like a blunt knife, only when assisted by considerable pressure.

By the employment of the fluted steel rollers, rotating at a considerable velocity and at differential speeds, while fixed at a definite distance apart, the sharp keen edges of the flutes on the fast roller act as a series of cutting blades, while the slow roller holds the material, but at the same time passes it forwards. The crushing action of millstones being thus avoided, a large percentage of semolina is produced, with only a small proportion of flour, the whole of the work being done by sharp cutting edges. The Continental system of grinding can be remunerative only in countries where a demand exists for the large quantity of inferior flour produced in the operation of grinding wheat into semolina, and where at the same time a very high price can be obtained for the beautiful flour which the small relative quantity of semolina yields. In making a comparison with the Continental system of grinding, it must be remarked, moreover, that the only kinds of wheat which yield semolina under the millstones are those of peculiar semi-brittle quality; while tender mellow wheat gives no semolina, as its floury portion is pulverized at once into flour by the rubbing and crushing action of the stones. On the other hand, by the Buchholz process, the whole principle being that of using a cutting instead of a crushing action, a large percentage of semolina is obtained from even the most tender native wheat, which would yield no semolina under the millstones.

The bran as discharged from the rollers in this process at T, in Fig. 5924, is thick, and by no means merchantable, for it has not been sought to cut away from it the whole of the flour-cells next to the membrane, because it is desired to leave the noxious cerealine undisturbed. The bran may be ground through millstones, and the flour obtained from it may be dressed out in the ordinary way; but as would be expected, however finely this flour is dressed, it will nevertheless bake brown, as it is the worst flour the grain contains; and the fact that it is so is the very reason why it should be kept apart by itself. The remaining produce of the semolina mill goes all together into the trunks R, R, and consists of semolina large and small in size, the small pieces of bran of the same size as the semolina, and the flour which has been made by the rollers. The quantity of this flour should not exceed about 5 per cent. of the original wheat, and its quality is better than the flour made from similar wheat by ordinary millstones. The whole produce, except the bran, is taken to a silk reel, where the head silks dress out all the flour, and the silks at the tail take out the finest semolina or sharps.

The remaining larger sizes of semolina and the bran of corresponding size are passed over a silk which sorts them into three sizes, and each of these is then freed from the small bran contained in it by the centrifugal separator shown in Fig. 5933. A small horizontal wood disc A on the top of a vertical spindle B is made to revolve at such a speed as will throw the semolina to the sides C, C, of a cylindrical case D. The bran being lighter cannot be thrown so far, and thus falls into an inner annular division E E of the case, while the fine dust falls into the centre compartment F; and all are collected separately on a lower floor from the spouts. The speed of the disc A in the separator, Fig. 5933, varies, according to the size of the semolina, from 250 to 650 revolutions a minute. The semolina is then fit for the millstones, to which it can be led either mixed or each sort by itself, the flour being afterwards dressed out.

Where there are no millstones, a roller mill may be used to reduce the semolina to flour, consisting of rollers of the same kind as those used in the semolina mill, but with a much finer grooving. The result, says W. P. Baker, is a large percentage of flour of great beauty and bloom, quite different in appearance from anything that can be produced by the ordinary grinding with millstones, however finely such flour may be dressed. In fact, however good may be the dressing, it is impossible by that means to restore to flour the properties it has lost by bad grinding. By the roller process, flour can be made from wheat of poor quality, which cannot be equalled in grinding by millstones, even if the finest wheat be used. The roller mill is equally adapted to all kinds of wheats, but the gain is naturally greater with coarse red wheat, containing, as this does, much brown matter. Many descriptions of red wheat are sound and strong, and have no drawback but the bad colour of the flour they yield under the old plan of grinding by millstones, and they may always be bought at a low price. But with the roller mill, such wheats as some of the Banats, Hungarian, and Black Sea, produce flour which is better and whiter in bread than any that can be obtained by millstones from the best white English wheat. It is found, moreover, that flour freed from cerealine produces about 10 per cent. more weight of bread than ordinary flour.

Although the Buchholz produces a beautifully white flour, the advantage of getting rid of the cerealine is much disputed.

Figs. 5934 to 5937 represent the arrangement of a floating steam corn-mill, fitted by William Fairbairn and Sons, in iron screw-steamers, and used to supply the British army during the Crimean war; Fig. 5934 is a longitudinal section of the vessel; Fig. 5935 a plan of the machinery, with the decks removed and partly in section; and Figs. 5936, 5937, transverse sections of the vessel.

5933.

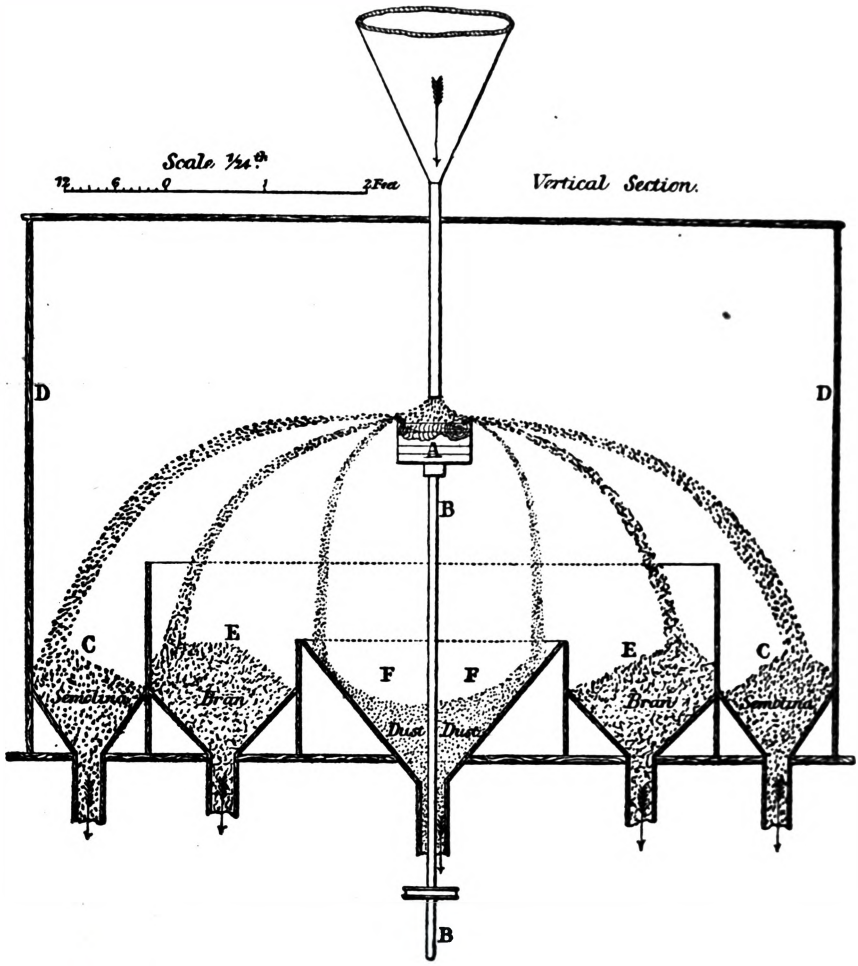

5934.

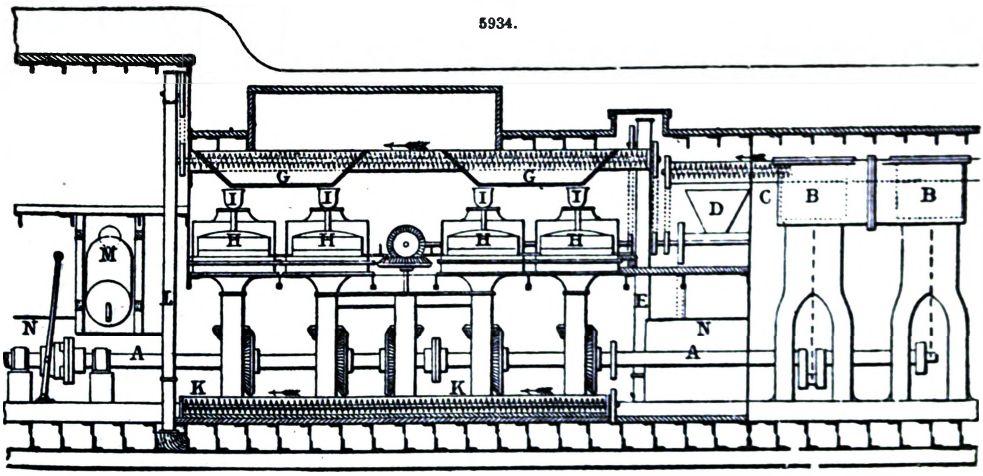

5935.

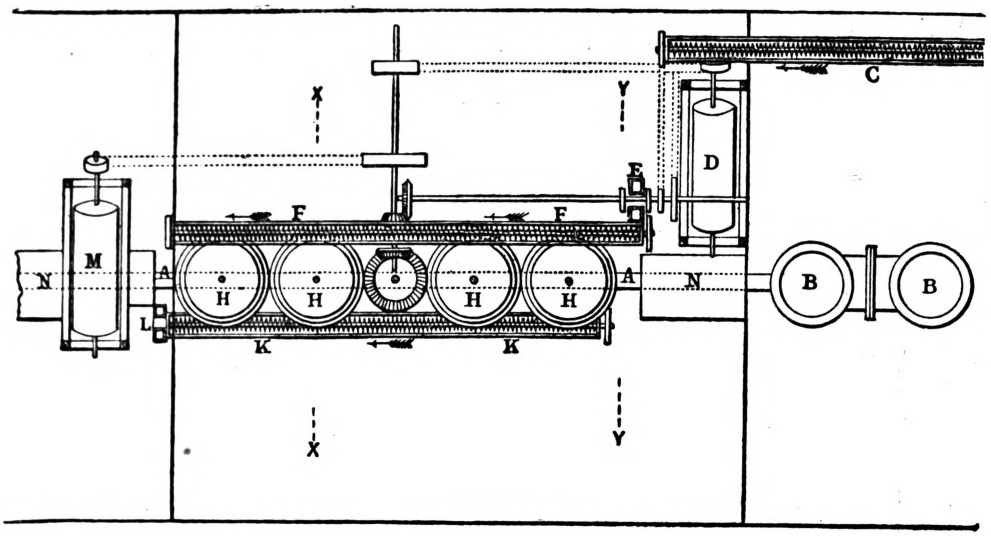

5936.

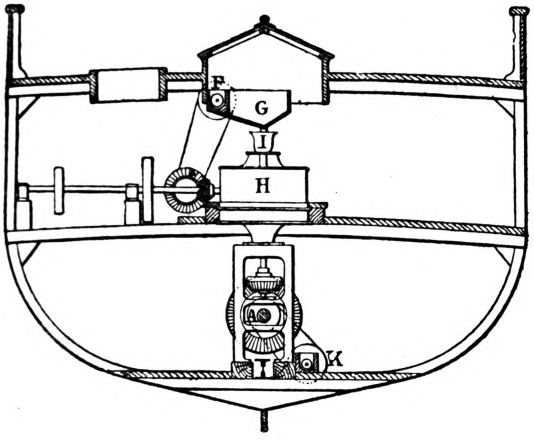

5937.

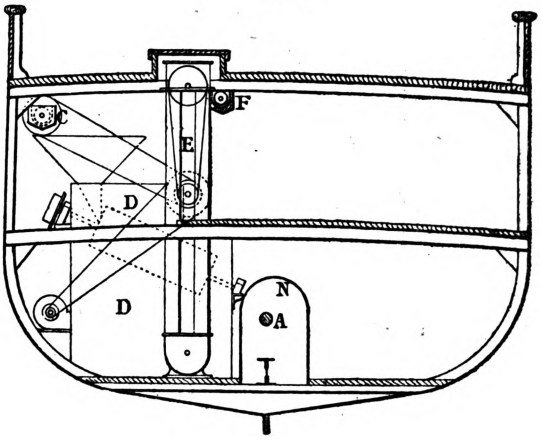

The mill machinery is all driven from the propeller-shaft A, operated by the engines B; and the whole of the processes are performed without the aid of manual labour. The wheat is stored in the fore hold of the vessel, and raised by an elevator into the screw-creeper C, which conveys it into the corn-dressing machine D, where it is cleaned and winnowed. Thence it is again conveyed by the elevator E and the screw-creeper F into the hoppers G, G, for feeding the millstones H, H. The grain is fed to the stones by the silent feeders I, first introduced by William Fairbairn, and now in general use in this and foreign countries. After being ground by the millstones H, the flour or meal is delivered into the screw-creeper K, which conveys it to the elevator L, by which it is delivered into the flour-dressing machine M; it is here freed from bran and filled into sacks, having been separated into a fine and coarse quality. This completes the whole process. The propeller-shaft A is exposed under the millstones, but covered by an iron trough N in the other parts of the vessel.

There are four millstones, and these utilize 20 out of the whole 80 horse-power—the horse-power of the engine.

The grinding of wheat was found to be performed quite satisfactorily whilst the vessel was at sea, even in a heavy swell, causing an excessive motion, which tried the fitness of the machinery for the work to an unusual degree; the grinding whilst the vessel is performing her voyage being obtained from the same power that propels her. On one occasion when the vessel was steaming 6½ knots or 7½ miles an hour, ten sacks of 168 lbs. each, or 1680 lbs. of wheat, were ground an hour, and the mill was kept in constant work for thirty-five hours, and was found to run more regularly than when the screw was disconnected.

In the ordinary process of grinding corn, modern practice differs but little, in its main features, from that which has been in use for many centuries; the corn being caused to pass between two horizontal stones, placed nearly in contact with each other, and furrowed by grooves on their contiguous surfaces; the lower stone being immovable, while the upper revolves upon a spindle, and has a hole in its centre through which the corn is admitted. Various modifications of this method have been proposed, and, to a limited extent, adopted. None of these methods, however, appear to possess

such advantages as to justify their adoption in preference to the established practice; which, simple as it is, has yet, in its minor details, partaken so largely of the mechanical improvements of modern times, as to have changed the character of the corn-mill from a rude and unwieldy combination of timber, stone, and iron, into a highly elegant and efficient piece of machinery.

Fig. 5938 is a longitudinal section; Fig. 5939, section through engine-house; and Figs 5940 to 5942, plans of the various floors of a large mill upon the English plan, erected at Odessa by Wm. Fairbairn and Sons, of Manchester. As in most English mills of the present day, it will be seen that the pairs of stones *e, e*, are arranged in a single line, enclosed in iron cases, and supported on strong iron framing *d d*. The power required to drive the mill is obtained from a steam-engine *g g*, the fly-wheel *h* of which gears into the pinion upon the horizontal shaft *i i*, and the motion is then distributed on each side to the stones by bevel-wheels. The wheat, as it is brought to the mill, is first delivered in its uncleaned state into the wheat garners situated to the left of the building. From these it is passed by means of Archimedian screw creepers to the wheat screen or smut machine, where the whole grain is cleaned and separated from dust, seeds, and foreign substances

5938.

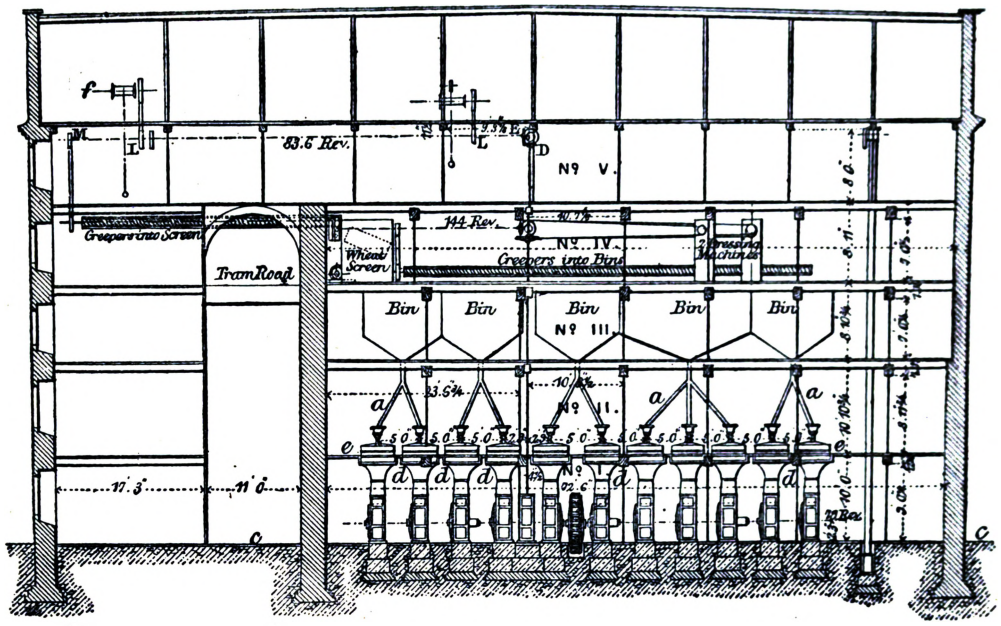

and whence it is distributed by other creepers into the clean wheat bins; from these it passes by the feed-pipes *a, a*, to the feed-hoppers of the stones, where it is ground.

Considerable difference of opinion exists among the millwrights of the present day regarding the comparative advantages of spur and bevel gearing as employed for driving grinding machinery. When spur-gearing is employed the arrangement is as follows; a great spur-wheel, fixed upon a vertical shaft driven by bevel-gearing from the prime mover, revolves in the centre of a system of stones, the number of which rarely exceeds six; each of these is driven by a pinion gearing into the great spur-wheel, which thus commands the whole simultaneously. Into this question our limits do not admit of our entering; in our examples we have chosen the latter method, as being that most generally practised. We may, however

5939.

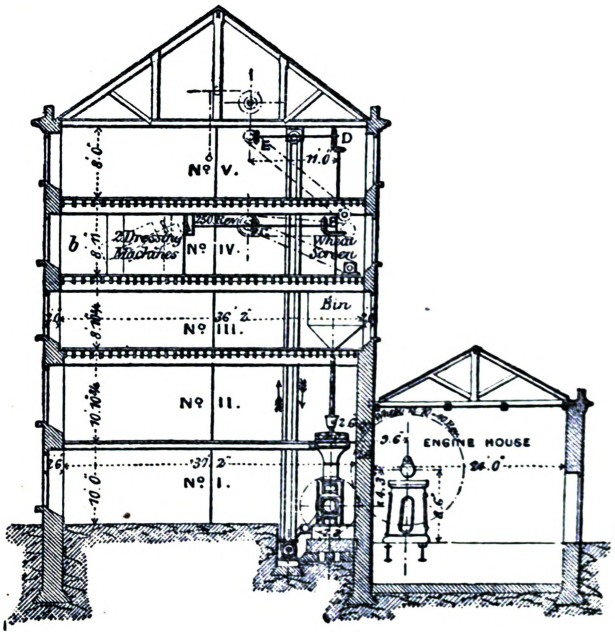

5940.

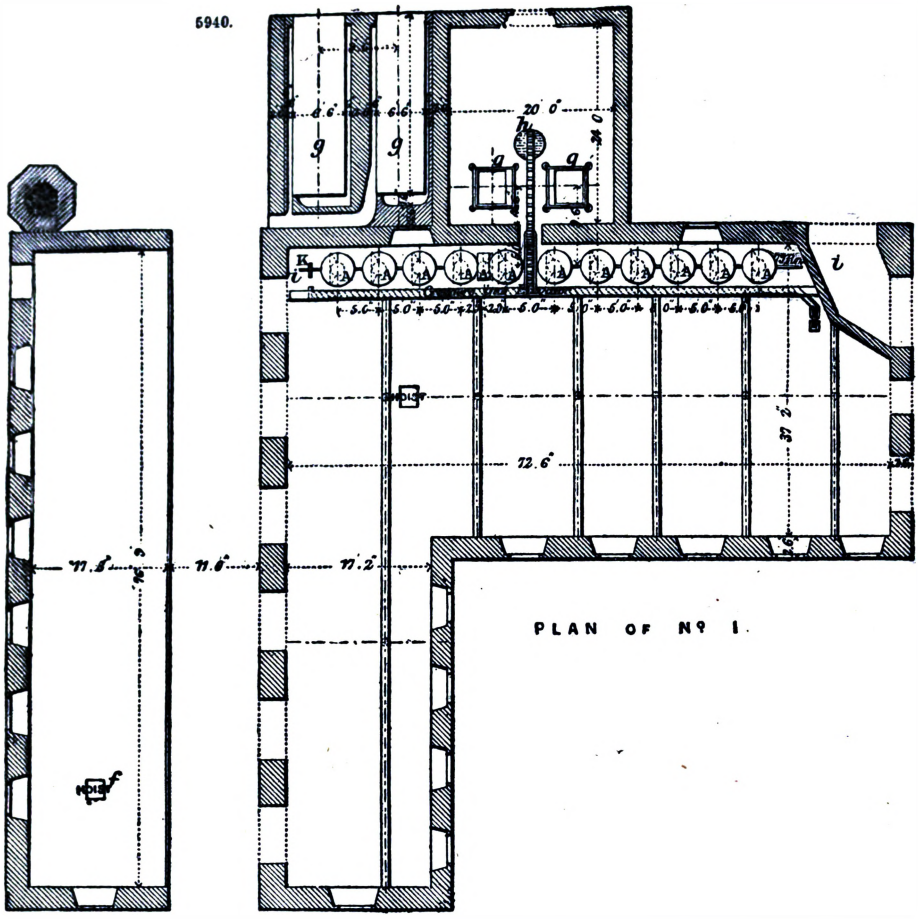
20 0"
72.6"
37 2"
11.8"
11.6"
17.2"
76 9"
HOIST
PLAN OF Nº I.

5941

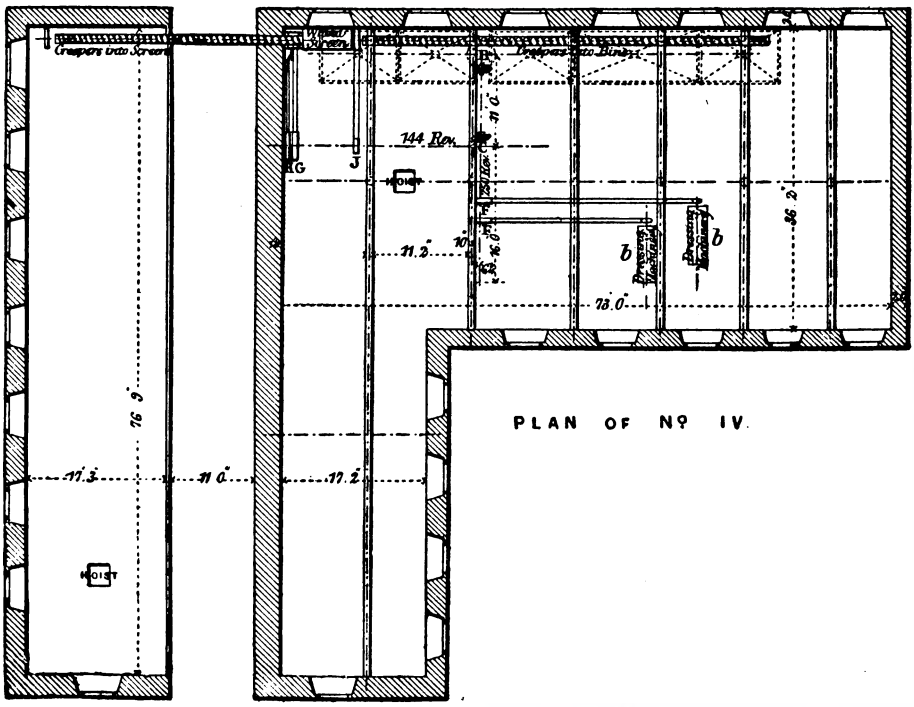
Creepers into Screen
Creepers into Bins
144 Rev.
11.2"
73.0"
36 2"
76 9"
17.3"
11 0"
17.2"
HOIST
PLAN OF Nº IV.

5942.

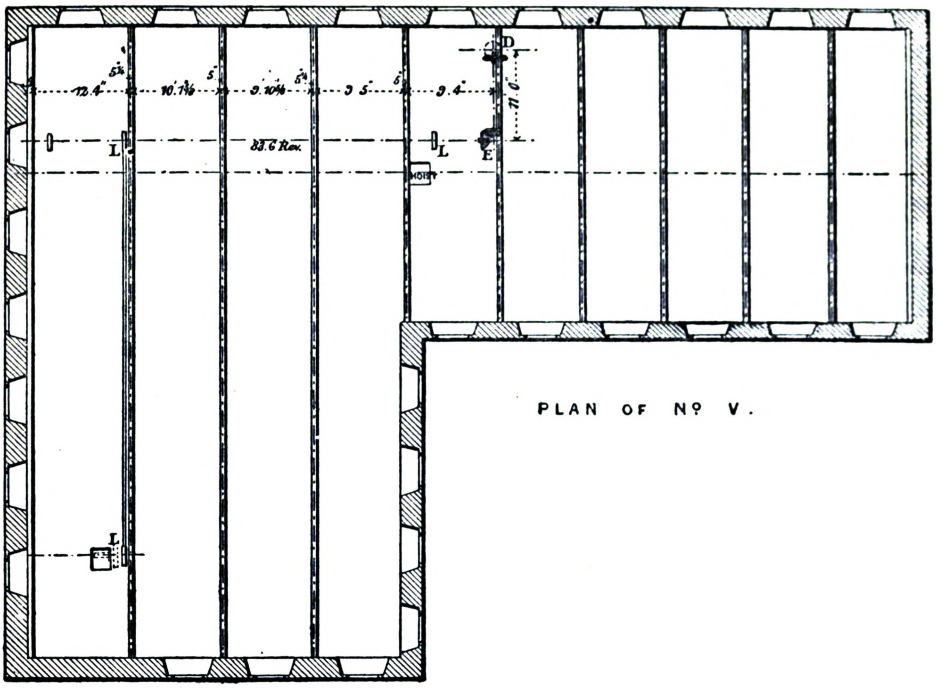

be permitted to enumerate a few of the more obvious advantages attending the present system. 1st, it admits of the stones, whatever may be the number employed, being ranged in a straight line instead of in a circle, thereby economizing space and tending to a more convenient and economical disposition of the garners and apparatus by which they are fed. 2nd, it dispenses with the cumbrous and expensive framework necessary for binding together the parts of the system of spur-gearing. 3rdly, it admits of the employment of wheelwork of a finer pitch, and consequently of a more smooth and equable action, than could be used in the other case. And, 4thly, the use of bevel-gearing increases the facility of disengaging at pleasure any pair of stones which may require examination or repair.

We shall now proceed to describe the mechanism by which the various processes undergone by the grain, both previously and subsequently to the grinding, are effected; and, to avoid repetitions, we shall notice these processes in the order in which they occur.

The wheat to be ground is deposited in the upper floor of the mill in the large garner, from which it is conducted through a creeper into the screening machine. This machine consists of a species of cylindrical sieve, formed of wire cloth, and partitioned inside so as to resemble an Archimedian screw. It is mounted upon an axis, and revolves with a considerable velocity in the interior of a close box, in which it is set at an angle with the horizon. The corn enters at its upper extremity, and, after being thoroughly agitated by its passage through the partitions in the interior of the screen, and thereby divested of the greater portion of the refuse with which it was mixed, falls into a spout; being subjected, in its passage through this spout, to the action of a blast from a fan, by which the remaining portion of the sand and dust that escapes with the grain is carried off by a passage leading to the exterior of the house. The grain, after being thus cleansed, is delivered into the creeper-box, by which it is distributed into the feeding bins.

The elevator consists of a long endless chain of small buckets formed of tin plate, and mounted at regular distances upon a leather band passing over two pulleys enclosed within cast-iron frames. The uppermost of these pulleys is driven at a moderate velocity by a belt, and the buckets, passing in succession the opening by which the grain is delivered from the screen, become each charged with a small portion of it; this they convey through the wooden pipes or boxes, in which they are enclosed, to the upper extremity of the chain, where they deliver their contents.

The contrivance just described is applicable only to the raising of the grain or flour from a lower level to a higher. For horizontal transport, modern millwrights make use of an apparatus called the creeper, which is a very happy application of a well-known principle to the abridgment of manual labour. The creeper is a long endless screw, with a wide pitch and thin threads, enclosed in a wooden box or trough, of dimensions slightly greater than its own diameter. It is made to revolve upon its axis, by means of a belt and pulleys, at a velocity corresponding with that of the elevators, and, being restricted from moving longitudinally, the threads of the screw force the grain introduced at one end of the trough to the other. The action of the screw in the case of the creeper is identical in its nature with that of the endless screw in giving motion to a worm-wheel.

The wheat which is supplied to the bin falls through the feeding pipes or spouts *a*, *a*, into the hoppers, by which the grinding apparatus is surmounted. After being reduced into flour, it falls through pipes, into the creeper-box, Fig. 5940, by which it is transferred to an elevator. By this

elevator it is raised to the summit of the house, and carried by means of creepers *b*, *b*, to the dressing machine.

This machine, which is very similar in external appearance to the screening machine already described, consists of a hollow cylinder, covered with wire cloth of different degrees of fineness, the finest being at the end which is most elevated. Within the cylinder, which is stationary, a circular brush revolves, in contact with the wire cloth of which it is composed. The flour which is fed into the cylinder is, by the motion of the brush, sifted or rubbed through the wire, the finest through the upper end, the second through the next division, and so on, till the bran falls through the end of the cylinder, being too coarse to pass through any of the wires. The different products thus separated are then stored in sacks, or otherwise disposed of as may be most convenient.

On the processes undergone by the corn both previously and subsequently to the grinding, much of the success of the whole operation depends. In place of the wheat screen, an apparatus called a shelling mill has been employed in some establishments. This consists of a pair of ungrooved millstones working at such a distance apart that the grain is merely rubbed between them, but not cut or broken. From the stones it is received upon an inclined sieve, where the heavier parts of the refuse fall from it, and is then exposed to the blast of a fan, which deprives it of the remaining lighter portions. For dressing the flour, bolting machines are very generally used either in combination with, or in place of, the dressing machines described above.

The Stone Framing.—A strong cast-iron standard or framing securely bolted to a stone foundation by two holding-down bolts, encloses the principal part of the driving and adjusting gearing for each pair of stones. It is made in the form of an oblong box, and is traversed by two horizontal diaphragms or partitions, cast of a piece with it, the upper one for sustaining the footstep of the mill-spindle with its adjusting apparatus, and the lower for carrying the plummer-block of the driving shaft. It is surmounted by a large bell-shaped casting, called the cone, firmly bolted, by a flange at its lower end, to the standard, while the upper extremity is expanded, and terminates in a cylinder, of a diameter somewhat greater than that of the millstones, the lower of which, sometimes called the *bed-stone*, rests, and is secured within it. Two straight and broad flanges are cast at opposite sides of the cylindrical part, for the purpose of bolting the cone to the beams of the mill, or to the same parts of the framing of the contiguous pairs of stones; while another circular flange passes all round, for sustaining the flooring. Three large openings are left in the upper part of the cone to give access to the interior, and it is provided with suitable arrangements for the reception of the several adjusting screws required for the setting of the lower stone.

The Stone Case and Feeding Hopper.—Above the cone, and of the same diameter with the cylindrical part of it, is placed the stone case, which surrounds the upper stone, and serves to confine the flour which is the result of the grinding. This is simply a cylinder of thin sheet iron, resting upon the stone floor, and having affixed to the top of it a ring of wood, on which the tripod for supporting the feeding apparatus is set. This cover is made open in order to admit the air freely between and around the stones during the process of grinding. A cast-iron ring, supported by three malleable iron legs, forms a sort of tripod in which is placed the hopper, which receives the grain from the bins above, through the feeding pipe or spout, and supplies it to the stones by means of the feeding apparatus. A piece of coarse wire gauze is placed in the hopper, to intercept any foreign body that may descend with the grain.

The Driving Gear.—The driving shaft is part of the line of horizontal shafting which is common to the whole range, and which receives its motion from the prime mover, generally through the intervention of a single pair of wheels. The velocity of this line of shafting is usually from seventy to eighty revolutions a minute, with stones of the diameter of those in our examples. The driving shaft revolves in brass bearings, fitted into a plummer-block, bolted to a sole formed in the standard. The strain of the shaft being entirely in a downward direction, this plummer-block requires no cover, the journal being simply protected from injury by a slight brass cap.

A large bevel mortise wheel, working into the pinion on the mill-spindle, serves to transmit the motion of the shaft to the latter. These wheels are made with the greatest possible care and accuracy, so as to work together very smoothly. The pinion is not fixed immovably upon the spindle, but is capable of sliding vertically upon it by means of a sunk feather.

The Mill-spindle and its Appendages.—The mill-spindle is made of the best forged iron, accurately turned over its entire length, and rises perpendicularly through the standard, the cone, and the lower millstone. It is attached to the upper or running stone by means of a cast-iron piece, called the rhind, which combines this function with that of regulating and delivering the supply of grain to the stones.

The lower or fixed stone is perforated by a large square hole in its centre, into which the cast-iron block is firmly fixed by slips of wood and wedges. Into this block are fitted three brass bushes, which form the upper bearing of the mill-spindle. These are adjusted by means of wedges, the screwed tails of which pass downwards through a cast-iron ring, and are regulated by thumb-screws on each side of it. Small semicircular chambers are formed in the socket between each bush, and filled with hemp and tallow, for the lubrication of the mill-spindle; and the whole is carefully protected from dust by slips of sheet iron screwed over it.

The Millstones.—The diameter of the millstones most in use at the present day is 4 ft., and their thickness about 12 in.; one-half of this thickness is composed of French burr, a very hard, though porous mineral, of a silicious nature; the other half is made up of plaster of Paris. In consequence of the difficulty of obtaining sufficiently large masses of the French stone, it is usual to construct the millstones in segments, which are cemented together, and the whole firmly bound by iron hoops passing round the circumference. The lower stone is, in the first instance, carefully dressed into a perfectly flat, plane surface, but the upper one is made slightly hollow for a small distance from the central aperture, so as to allow the grain to be freely admitted between the stones. Being thus prepared, grooves are then cut on the rubbing surfaces of both, in the manner indicated in Fig. 5969.

The number of channels formed in the stones, and consequently the number of compartments, or quarters into which they are primarily divided, are varied by different millers, but the mode of drawing the lines as here given is applicable in all cases. The circumference of the stone is first divided into equal parts; lines are drawn from each division to the centre; these radii determine the limits of the grooves in each compartment. A chord is then drawn, joining the bounding radii of any two compartments; this chord is, of course, bisected by the intermediate radius. These are the outlines of the grooves, which are then to be cut into the stone, perpendicularly on one side and obliquely on the other, so that each furrow shall have a sharp edge. The direction of the grooves being the same in both upper and lower stones, as they lie on their backs in the position proper for being cut, it is obvious that when the former is reversed and set in motion, their sharp edges will meet each other after the manner of a pair of scissors, and thus grind the corn more effectually when it is subjected to the action of the unbroken surfaces between the channels.

Adjustment of the Lower Stone.—It is of the most essential importance to the proper working of any pair of stones, that the grinding surface of the lower stone should be perfectly level, and that its centre should be exactly perpendicular above that of the lower bearing of the mill-spindle. To secure the former of these conditions, three pinching screws are fitted into the cone, that number being greatly preferable to four in adjusting the level of any surfaces, and, bearing against small slips of iron sunk into the stone, it can be raised or depressed by them to any required extent. The centering of the stone is effected by means of four pinching screws acting horizontally upon it. To secure it against deviating from the truth after having been properly adjusted, all these screws are provided with jam-nuts.

Adjustment of the Mill-spindle.—The lower bearing or footstep of the spindle is also made capable of nice adjustment, both horizontally and vertically. The former is necessary in order to ensure the accurate working of the driving wheel and pinion, and the latter to regulate the pressure of the upper upon the lower stone, and to compensate for the changes produced upon both by the frequent dressings which their grinding surfaces have to undergo.

The footstep, which is of gun-metal, is turned and fitted accurately into a cast-iron socket, resting on the upper diaphragm of the standard; the hole into which it is inserted, and the annular recess by which it is surrounded, being made of somewhat greater diameter than the corresponding parts of the socket itself. Its exact position is determined and secured by the four radial pinching screws passing through the ring, and working in nuts fitted into recesses cast upon its interior surface.

The Feeding Apparatus.—The supply of grain admitted between the stones is regulated by means of a cast-iron pipe, open at both ends, the lower end being brought into close proximity with the rhind, while the upper part encloses the pipe in which the feeding hopper terminates. It is suspended by means of a cast-iron lever. A small chain attached to the end of the lever, and passing over a friction-pulley at the bottom of the stone case, serves to connect this feeding apparatus with an ingenious little piece of mechanism attached to the standard, by which the miller is enabled to regulate the supply with the greatest nicety.

The Disengaging Apparatus.—The driving pinion is fitted upon the mill-spindle so as to be capable of sliding up and down upon a sunk feather. When fully in gear with the wheel, it rests upon a collar formed on the upper surface of a large brass nut, by which the miller is enabled to keep the pinion invariably in its proper position with regard to the wheel, independently of the position of the spindle, which requires to be slightly lowered every time the stones are dressed. When properly adjusted the pinion is secured to the spindle by a tapered key

It is, however, necessary to throw each pair of stones periodically out of gear with the general range, to admit of their being dressed. For this purpose the tapered key is removed, and the pinion raised out of contact with the teeth of its driving wheel by means of a species of small jack or lifting apparatus attached to the standard.

The Elevators and Creepers.—The material employed is cast iron; the creeper is made in 6 ft. lengths, each length being in the form of a tube, $3\frac{1}{2}$ in. diameter, and about $\frac{3}{8}$ in. thick, with broad leaves or threads cast round it after the manner of an Archimedian screw. The thickness of the threads does not exceed $\frac{3}{16}$ in. at the outer extremity.

The different lengths of which the entire creeper is composed are joined together by short wrought-iron studs, forming also the journals on which it revolves. These are made with square tails fitted into similar holes formed in the centre of small cylindrical blocks, which are carefully turned on their exterior surfaces and driven into the open ends of pipes previously bored to the same diameter. This construction at once ensures a strict rectilinear axis for the entire range, whatever may be its length.

The following is a list of wheels and speeds for the mill, Figs. 5938 to 5942;—

			ft.	in.				ft.	in.			
Fly-wheel,			13	10	diameter	= 40	revs. into	7	0	= 79	revs. of	horizontal shaft
Bevel	„	A	3	6	„	= 79	„	1	$10\frac{1}{2}$	= 145	„	millstones and upright.
„	„	B	3	0	„	= 145	„	1	9	= 250	„	cross-shaft to dressing machines.
„	„	C	1	$2\frac{3}{8}$	„	= 250	„	2	1	= 144	„	longitudinal shaft for screen creepers and fan.
„	„	D	1	$1\frac{1}{2}$	„	= 145	„	1	$11\frac{1}{2}$	= 83·6	„	cross-shaft in No. 5 room.
Mitre	„	E	1	8	„	= 83·6	„	1	8	= 83·6	„	longitudinal shaft for hoists and creepers.
Pulleys		F	2	6 × 9	„	= 250	revs. on to	1	3	= 500	„	dressing machines.
„		G	2	6 × 9	„	= 144	„	1	3	= 288	„	screen.
„		H	2	6 × $6\frac{1}{4}$	„	= 144	„	0	7	= 617	„	fan under screen.
„		I	1	2 × 6	„	= 144	„	2	$2\frac{1}{4}$	= 78	„	creepers over bins.

	ft.	in.				ft.	in.			
Pulleys K	1	6 × 4½	diameter =	79	revs. on to	1	6	=	79	revs. of creepers on ground floor.
„ L	2	0 × 6	„ =	83·6	„	2	6	=	66	„ chain barrel 8 in. diam.
„ M	1	7 × 6	„ =	83·6	„	1	8	=	78	„ creepers for screen.
„	1	2 × 6	„ =	83·6	„	2	3½	=	42	„ meal elevator—not shown.

Figs. 5943 to 5947 are of Smith, Wood, and Don's plan of hanging millstones. Fig. 5943 represents a pair of millstones in section. A is the ripper or running millstone; B the bed-stone; C the

5943.

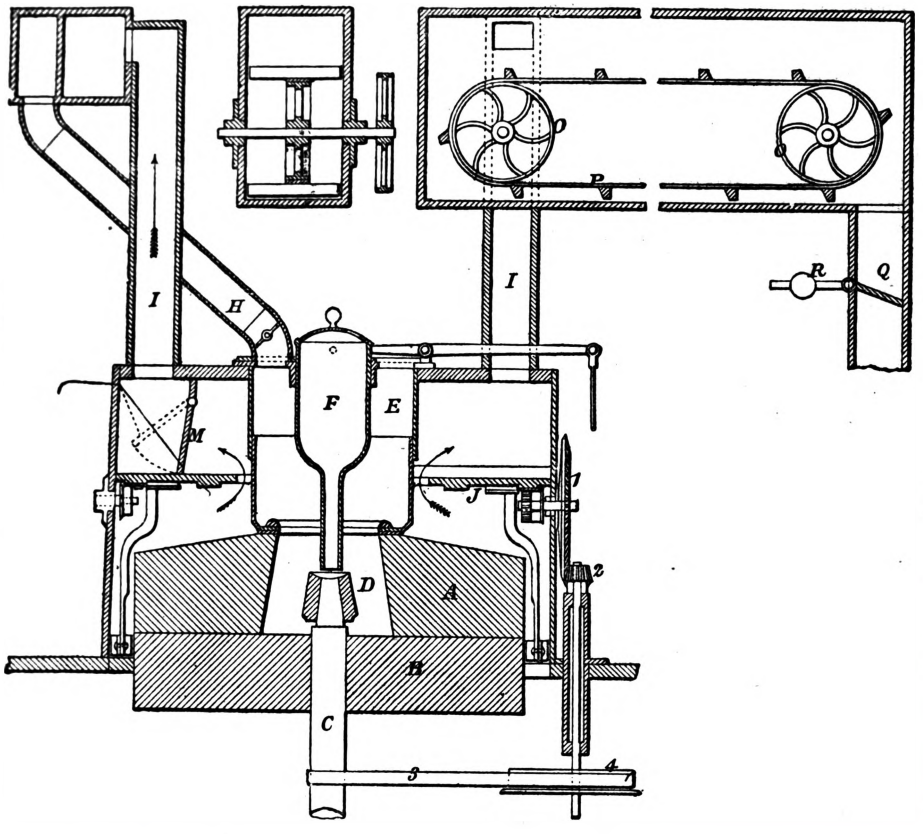

stone spindle, on the top of which is fixed the balance or universal rhind D carrying the running stone; E is the eye-box, the upper part of which is attached to the top of the millstone case, and the lower part slides within the upper part, and has a circular valve at the under side, which lays on a ring fitted to the eye of the running stone, thus causing the current of air when either blown into or driven through the eye of the stone to pass between the grinding surface of the millstones; F is the hopper receiving the grain to be ground, and delivering the same to the saucer fitted to top of stone spindle, which distributes it equally between the surface of the millstones regulated by the lever G. The feed-hopper F is fitted to, and slides in, a circular opening on the top plate of the eye-box E. H is the blast-pipe for conducting the air blown into the eye of the millstone; I is the exhaust-pipe to take off the stive or damp air or plenum of air blown into the stone cases used in Bovill's system of grinding; J is a revolving table borne on three or more rollers K fixed to the inside of the stone case. A circular rack-wheel, Fig. 5944, is fixed to the under side of this revolving table. A pinion, forming one of the rollers, works into this circular rack-wheel; this pinion being caused to revolve by bevel-gearing 1, 2, being set in motion by a strap 3 from the stone spindle driving the pulley 4, on the spindle of which the bevel-pinion is fixed. This circular or revolving table has an annular opening around the eye-box E, which allows the stive and moist air to escape from the runner-stone into the upper part of the stone case, where the stive or fine flour is deposited on to the top of the revolving table, and the moist air is drawn away by the exhaust up the spout I, which stive is swept off the revolving table by the sweeper L, Fig. 5944, which sweeps the stive or fine flour down the annular space on to the top of the runner-stone, from whence it is delivered down the meal-spout with the meal or ground flour. M is a baffling board hung to the under side of top of stone case, which may be opened, more or less, as required, by pulling the string; this is to check the too rapid current of the air and stive up the exhaust-spout I, and cause the depositing of the stive or fine flour on the top of the revolving table. N, N, Fig. 5945, are two or more perpendicular bars of iron fixed to under side of revolving table and revolving with it. To the lower end of these bars is attached a leather strap *a*, having angle-iron plates *b* fixed to the side of the

strap next to the bed-stone, and leather projections or sweepers *c*, fitted to the side next to the inside of the case; so that, when the revolving table is set in motion, it scrapes all the meal deposited in

5944.

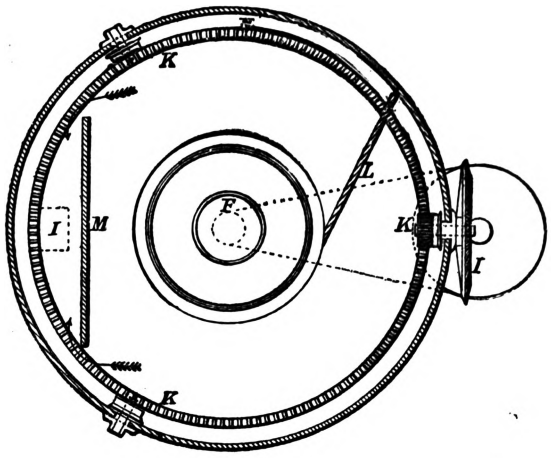

5945.

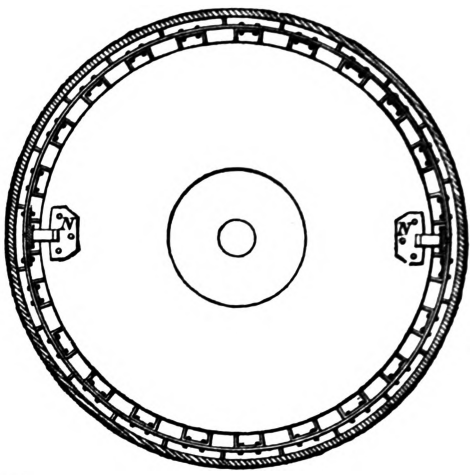

5946.

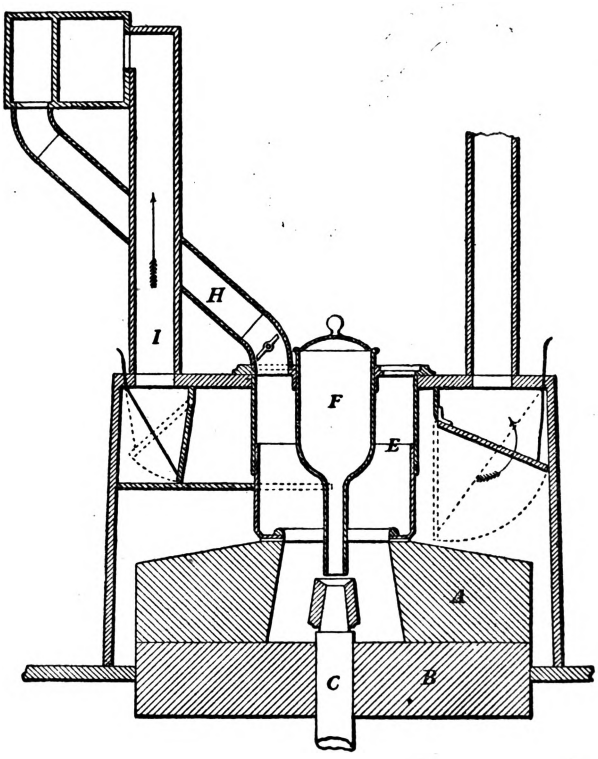

5947.

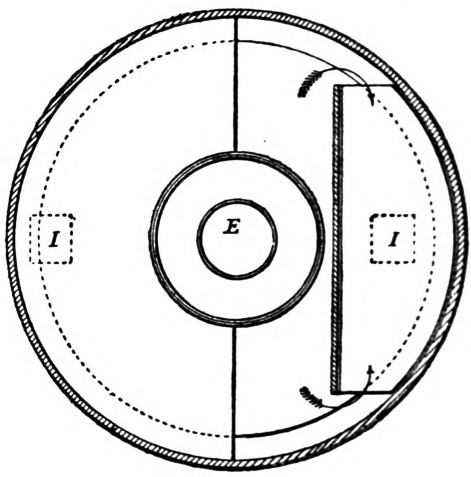

the space between the bed-stone and stone case, delivering the same to the meal-spout, thus assisting to keep the stones cool, and preventing the accumulation and waste of meal in the stone case.

Figs. 5946, 5947, are intended to show the method adopted of using a fixed table for catching and depositing the stive on a fixed table instead of a revolving table.

To save expense and economize space a set of stones may be arranged as in Figs. 5948 to 5950, which show the bed-plates of six pairs of stones supported by six columns.

Fig. 5951 is an end view, Fig. 5952 a longitudinal section, Fig. 5953 a plan of the granary; and Fig. 5954 a plan of the stone floor of a small steam corn-mill. There are here two pairs of stones driven through bevel-gearing by an ordinary stationary engine *g*, which also furnishes the power for working the cleaning, feeding, and dressing apparatus. In the ordinary course the grain is passed from the bin *m* to the smut machine *j*, where it falls upon an iron plate which is fixed upon and revolves with a central shaft at a velocity of about 550 ft. a minute, and round this

5948.

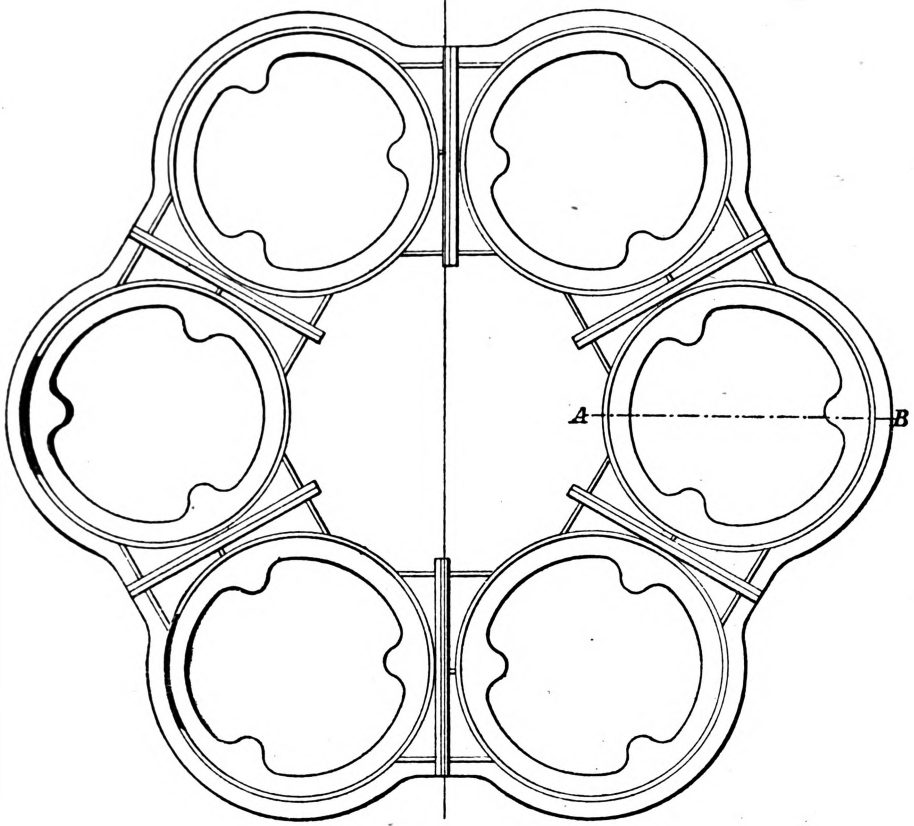

5949.

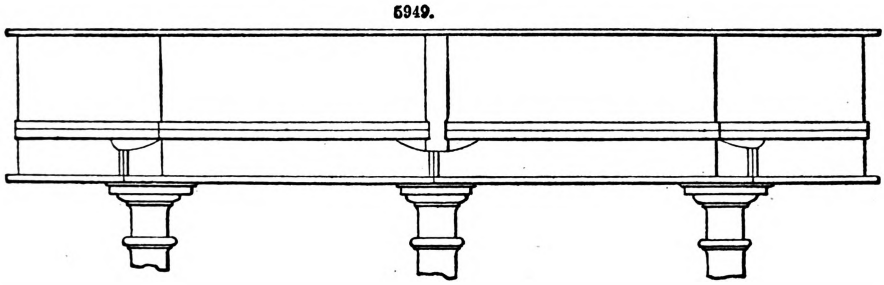

5950.

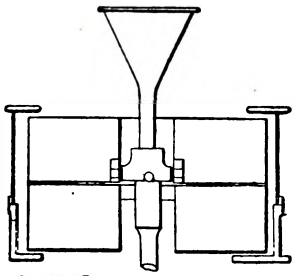

Section through A B with Stones &c.

5951.

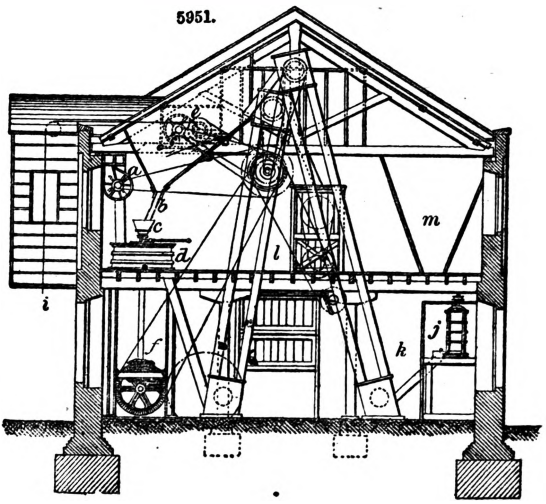

Reference to Figs. 5951, 5952;—*a*, exhaust-fan from stone; *b*, feeding pipe; *c*, stone hopper; *d*, stone case; *e*, grain-fan; *f*, driving gear; *g*, steam-engine; *k*, grain-elevator; *l*, flour-elevator; *m*, corn-bin; 2, dressing machines; *x*, *i*, sack-tackle.

shaft are attached radially a number of vertical beaters. In passing these beaters the corn, whilst running from one extremity to the other of the machine, has a large portion of dust and foreign

5952.

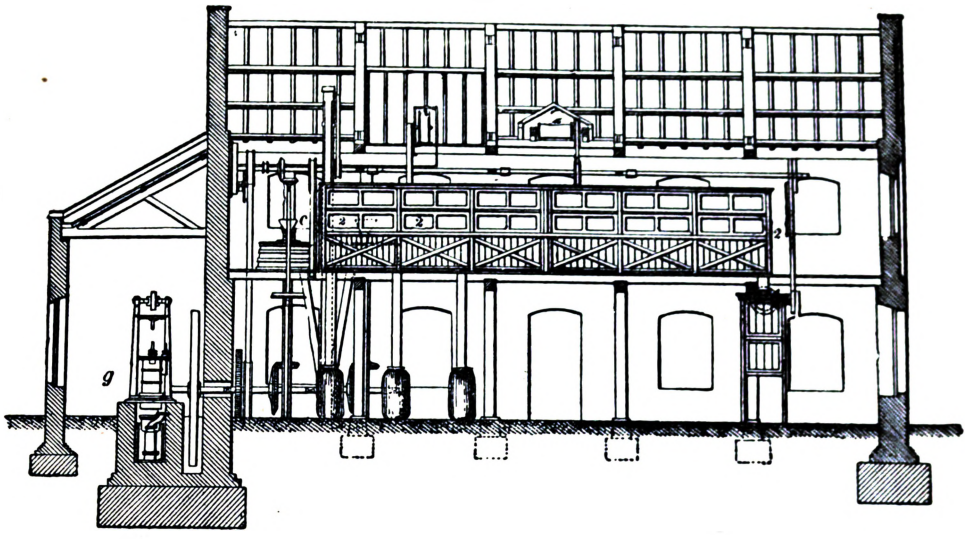

5953.

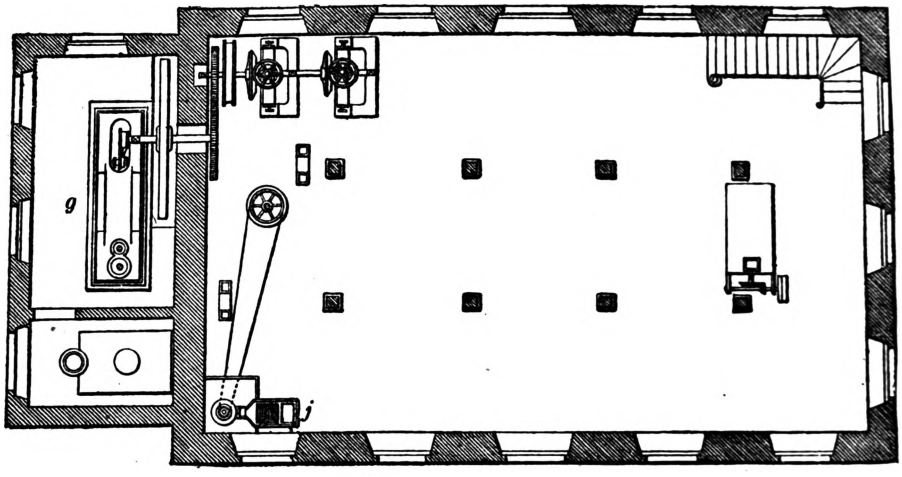

matter removed from it. The smut machine is covered with wire gauze, and is usually enclosed in a room by itself. From the smut machine the wheat is passed over a wheat screen, and is then taken up by an elevator to the feeding bin *e*, being submitted whilst leaving the spout from the elevator to a fan-blast, which clears it of impurities lighter than itself. It is then passed through the stones, ground, elevated, and dressed in the usual way.

5954.

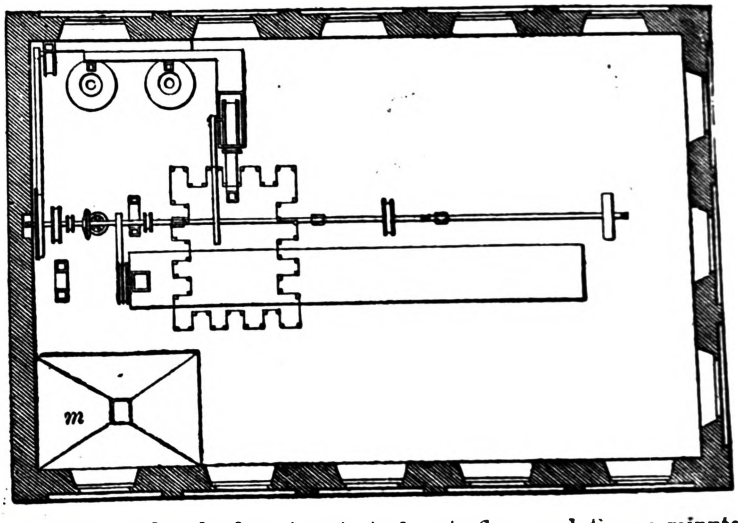

Figs. 5955 to 5957 serve to illustrate the construction and working of the silk bolting machine, called also dressing-machine or silk. The cylinders are from 20 to 30 ft. in length, 3 to 3½ ft. diameter, and make from twenty to twenty-five revolutions a minute. At distances of 3½ to 4 ft. radiating rods are inserted on the hollow shaft, and these form the rods

5955.

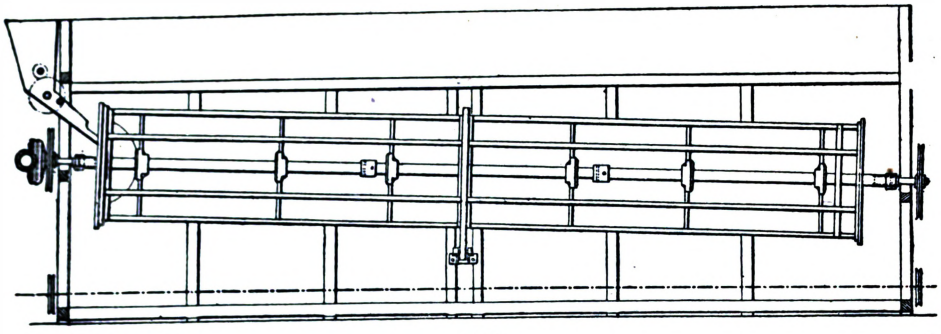

5956.

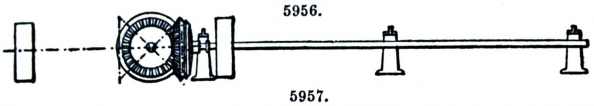

5957.

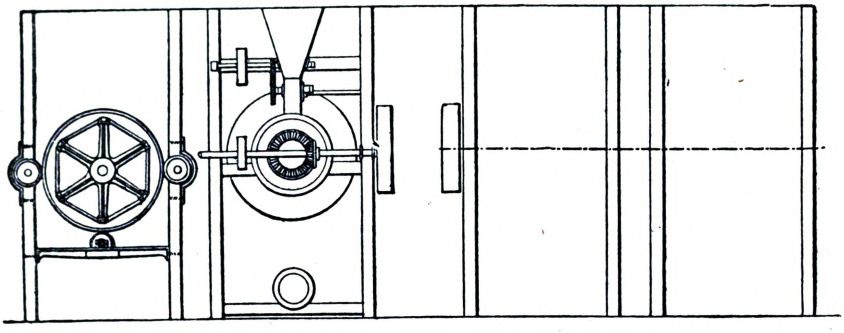

of the machine to which the silk covering for the flour to pass through is attached. The shaft ends in pivots, which have their bearings in plummer-blocks bolted to a cross-piece of iron. The machine is driven by a cross-shaft having two bevel-wheels keyed upon it, which gear into corresponding wheels on the driving shafts of the cylinders. The cross shaft also gives motion, through the intervention of a strap, to a pulley on the shaft of the creeper, shown by the dotted line in Fig 5955, which carries the flour along the trough under the reel.

Figs 5958, 5959, are a modern plan of setting millstones designed for this mill by Thomas Don; 1, 1, are millstones 4 ft. 2 in. diameter, and worked at a speed of 125 revolutions a minute; the lower stone lays upon the stone plate 2, 2, supported by upright frames 3, 3; 4, stone spindle driven by the bevel-gearing 5, 5. Fig. 5960, the cross-piece of the frame carrying the stone spindle step, *b*, lightering iron for lifting the stones, and so regulating the quality of the meal ground. Fig. 5961, cross-plate with space for plummer-block carrying horizontal driving shaft. Fig. 5962, stone spindle bush bar, fixed into centre of bed-stone. Fig. 5963, bearings let into eye of top stone for centres of balance-pin to work in. Fig. 5964, plan showing the manner of connecting the bed-stone plate. Fig 5965, details of arrangement *c*, *c*, for lifting bevel-pinion 5 out of gear.

The meal travels from the elevator along a creeper, and enters the dressing machine by a hopper; here it makes a progressive onward motion, rising and falling by gravi-

5958.

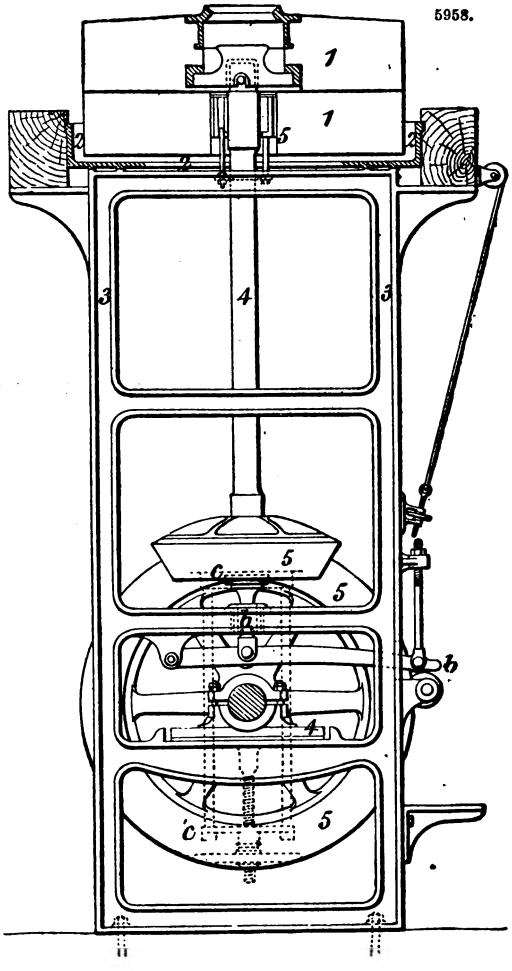

5959.

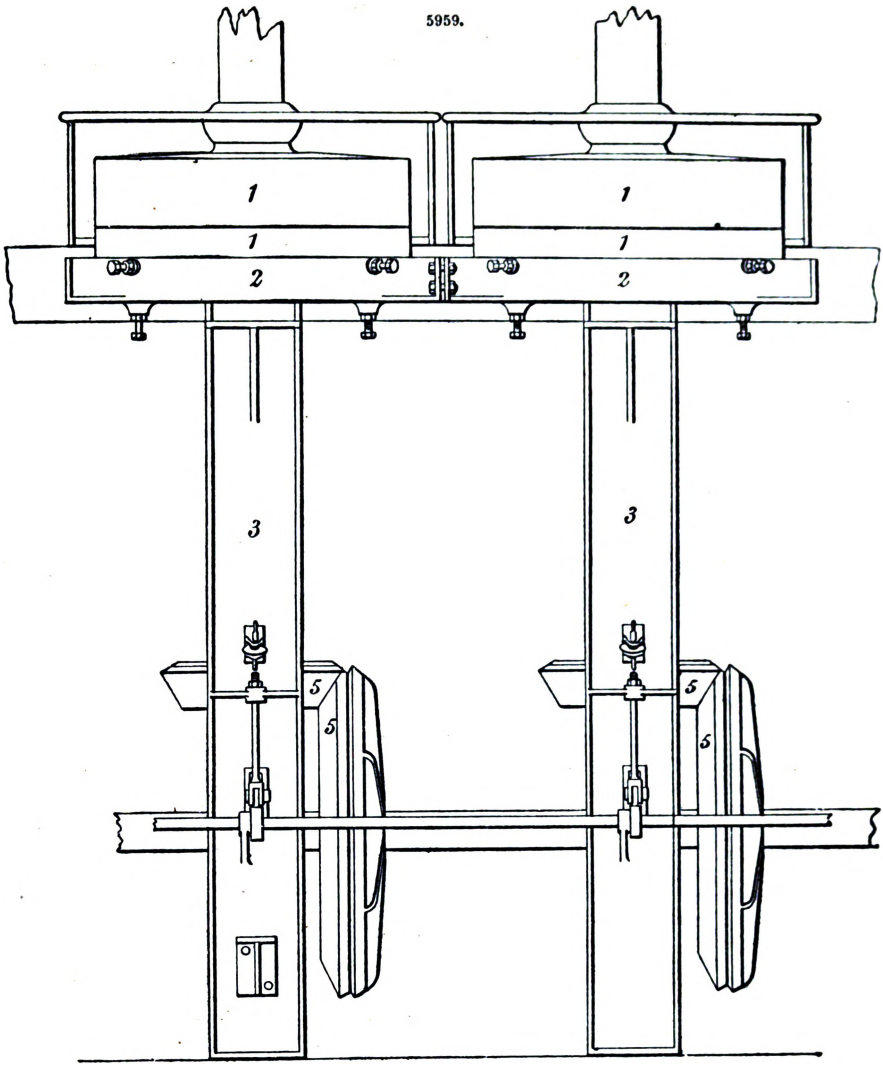

5960.

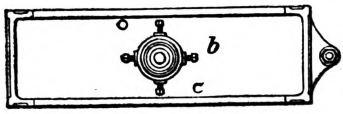

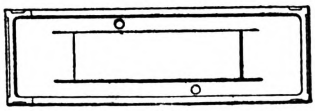

5961.

5962.

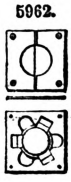

5963.

5965.

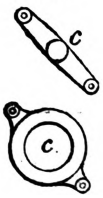

5964.

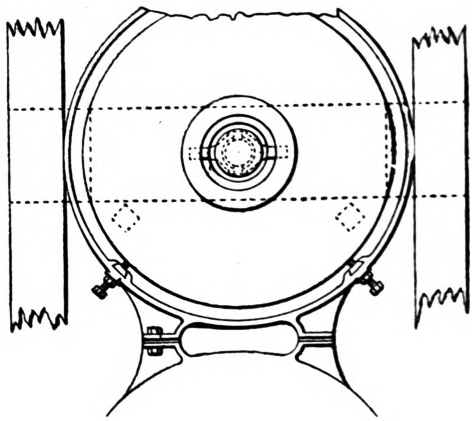

tation from the sides of the reel till the flour has passed through the interstices of the silk and the bran is delivered at the end of the machine.

Fig. 5966 is a vertical section of a pair of millstones as arranged by Wm. Cullen. The stones are placed in the ordinary horizontal position, but arranged to be driven in opposite directions. Fig. 5967 is a plan of a bed-plate E set upon the supporting pillars, and furnished with an adjustable upper bearing for a vertical tubular shaft which carries the lower stone B. Fig. 5968 is an inverted plan of a dish-plate C which is set on a cross-head or rhind D fixed in the upper end of the tubular shaft, and which is formed with a turned flange to cover a raised flange formed on the bed-plate, and so prevent the meal from getting under the stones. The lower stone is fixed in this dish-plate, and can be accurately levelled and adjusted by means of screws passing through the arms of the cross-head. Fig. 5969 is a face view of the lower stone B, and shows the details of an upper adjustable bearing for the central shaft which passes through the tubular shaft, and carries the upper stone by means of the usual rhind, shown inverted in Fig. 5971. The central shaft is supported on a footstep bearing in a transverse frame-piece fixed to the pillars, this bearing being adjustable by means of a lever and screw. The bearing for the upper end of this central shaft is fitted in the eye of the lower stone B, and consists of a box containing three equidistant brass bearing pieces G, which are adjustable radially by wedges acted on by screws. The spaces between the brass pieces are filled with fibrous material, which is saturated with oil, and the whole is covered with a plate to prevent dust from getting to the bearing surfaces. This arrangement of bearing admits of the central shaft being accurately centred with reference to the lower stone, and of its running with perfect steadiness, points requiring the greater attention when both stones revolve.

5966.

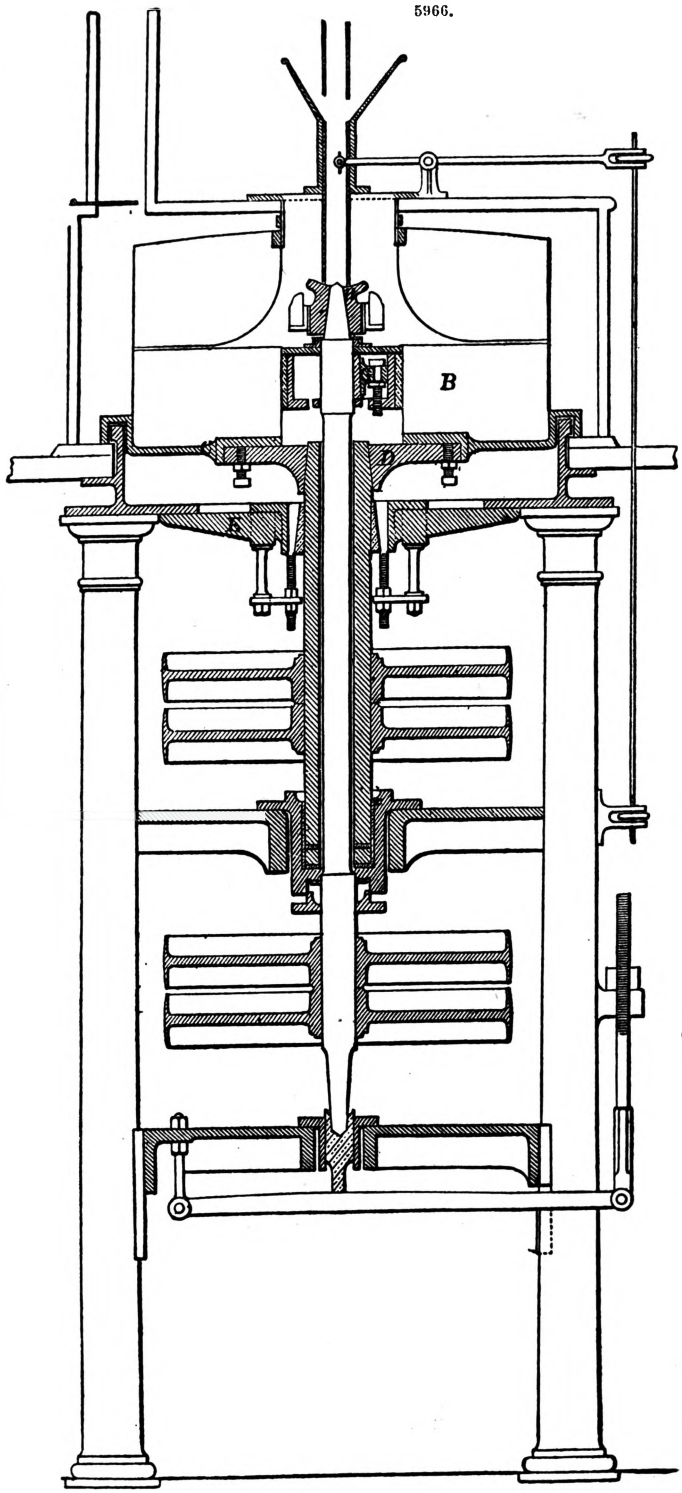

The proper supporting and steadying of the tubular shaft carrying the lower stone is also of great importance; and the bearing at its upper end consists of four brass pieces held in spaces, formed in the plate and made

adjustable radially by wedges and screws, whilst spaces between the brass pieces are filled with fibrous material saturated with oil. A brass cylinder surrounds the lower part of the tubular

5967.

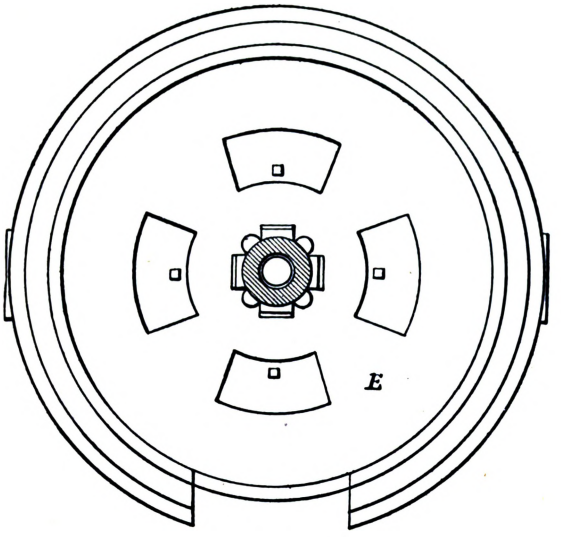

5968.

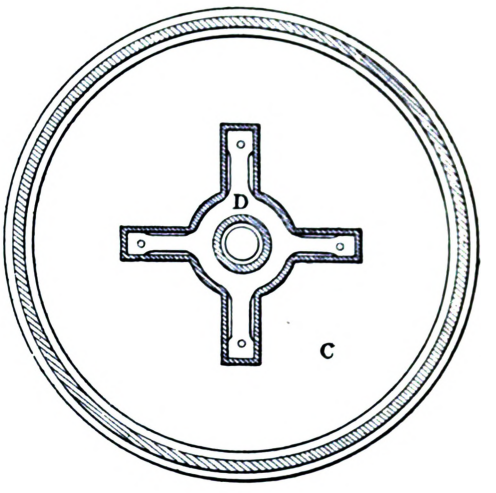

5969.

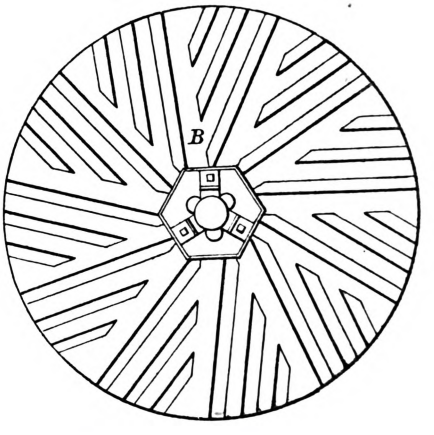

5970.

shaft, and the bottom of the shaft rests on three flat rings, the top and bottom rings being brass and the middle one cast iron, whilst all these are quite loose and free to revolve, and vertical grooves are formed down the inside of the brass cylinder, and radial grooves are formed on the side faces of the rings, so that the oil has free access to every part.

With this arrangement of the footstep bearing, if any extra friction should take place between the bottom of the tubular shaft and the ring next to it, some of the rings will revolve, but the continuous lubrication will in a few seconds cause the shaft-foot to glide over its former resistance and again revolve on the surface of the top ring. A stuffing-box gland is applied beneath the footstep bearing of the tubular shaft, to prevent the oil from dripping through and down upon the parts beneath.

The details of the bearing are carried in a box which is adjustable in a transverse frame-piece fixed to the pillars.

Each of the shafts has in it a pair of pulleys, one of each being fast, the other loose, and the shafts may be driven in opposite directions from a single parallel shaft by means of a pair of belts, one of which is open, the other crossed.

See AGRICULTURAL INSTRUMENTS. BARN MACHINERY. BELTING. CONSTRUCTION. COTTON MACHINERY. FLAX MACHINERY. GEARING. GUNPOWDER. PAPER MACHINERY. SUGAR MACHINERY.

Books on Mills;—Buchanan (R.), 'On Millwork and other Machinery,' by Tredgold and Rennie, 3 vols. royal 8vo, cloth, 1841–42. Rollet (A.), 'Mémoire sur la Meunerie, &c.,' 2 vols. 4to and folio, Paris, 1847. Fairbairn (Sir W.), 'Mills and Millwork,' 2 vols. 8vo, 1861–65. Box (T.), 'Practical Treatise on Mill-gearing,' crown 8vo, 1869. Rankine (W. J. M.), 'Manual of Machinery and Millwork,' crown 8vo, 1869. Craik (D.), 'The Practical American Millwright and Miller,' royal 8vo, Philadelphia, 1870. Dixon (T.), 'The Practical Millwright and Engineer's Ready Reckoner,' crown 8vo, 1870. Hughes (W. C.), 'American Miller and Millwright,' crown 8vo, Philadelphia, 1870.

MOLECULE. FR., *Molécule*; GER., *Molecül*; ITAL., *Molecula*; SPAN., *Molécula*.

All matter consists of an aggregation of minute particles. These particles are called *molecules*, and they differ from atoms in being always a portion of some aggregate. Molecules are of two kinds, called respectively *integrant* and *constituent*. Integrant molecules are the smallest particles into which a simple body can be conceived to be divided, or the smallest particles into which a compound body can be conceived to be divided without being resolved into its elements. Constituent molecules are the molecules of each element which forms an integrant molecule of a

compound. Thus an integrant molecule of water is composed of constituent molecules of oxygen and hydrogen. It is with the latter kind we have chiefly to deal in chemical investigations.

The distinction between an atom and a molecule must be clearly recognized. Hofmann, in his Modern Chemistry, gives the following definition, which is now generally accepted. "We may," he says, "define an *atom* of an elementary body to be the smallest proportional weight thereof that is capable of existing in *chemical combination*, and we may define the *molecule* of an elementary body to be the smallest proportional weight thereof that is capable of existing in the *free or uncombined state*." Thus a molecule, or as it is often called, an *elementary molecule*, may consist either of an isolated atom, or of a group of atoms.

The bulk, or *molecular volume* of an element in the gaseous state, is the same as the molecular volume of hydrogen at the same temperature and pressure, and in numerous cases the *molecular weight* of an element is twice its atomic weight. The following list of the elements whose molecular volumes have, up to the present time, been determined, is given by Dr. Frankland. The molecules of mercury, cadmium, and zinc contain one atom, and are termed *monatomic* molecules; those of hydrogen, oxygen, chlorine, bromine, iodine, fluorine, nitrogen, sulphur, and selenium contain two atoms, and are termed *diatomic* molecules; the molecules of oxygen, as ozone, contain three atoms, and are therefore *triatomic;* those of phosphorus and arsenic contain four atoms, or are *tetratomic*, and those of sulphur, under certain conditions, are *hexatomic*. Thus it will be seen that an element, as in the case of oxygen and sulphur, may, under different conditions, have two distinct molecular weights. We shall now enter more fully into the subject of molecular weight.

In a gaseous state, all bodies, whether simple or compound, have sensibly the same coefficient of dilation, that is, they increase sensibly by an equal fraction of their volume for an equal increase of temperature. All are equally compressed under the same conditions, that is, they are reduced to the same fraction of their volume for the same increase of pressure, other things being equal. The elastic force of gases is therefore nearly the same for all; and as it is generally admitted that the gaseous molecules are in motion, and that the elastic force of gases is due to the shock of their molecules against the walls of the vessels wherein they are contained, the most simple way of explaining that they all possess the same elastic force, under the same conditions, is to admit that equal volumes of gases, under the same pressure and temperature, contain the same number of molecules.

This supposition rests upon Gay-Lussac's law relative to the combinations of gaseous substances. If gaseous bodies are formed of molecules, if the decompositions and the combinations result from the exchange of atoms that takes place among the molecules, or from the union of several of these molecules into one, it is evident that the number of the molecules which have reacted, and the number of those which result from the reaction, must present a simple ratio. For the reactions can take place only between one molecule and another molecule, or between one molecule and two molecules, and so on. Therefore, if in equal volumes and under the same conditions of pressure and temperature, all gases contain the same number of molecules, the simple ratio which must exist between the number of reacting molecules and that of the molecules formed in the reaction, ought equally to exist between the volumes of the gases, before and after the reaction; and such is actually the case.

The hypothesis that, in equal volumes, all gases contain the same number of molecules, was first propounded by Avogadro, but was more fully developed by Ampère, under whose name it is better known. Starting from this principle, let us compare equal volumes of chlorine and hydrogen. We shall find in this case that the volume of chlorine weighs 35½ times more than that of the hydrogen, and hence we infer that the molecule of chlorine weighs 35½ times more than the molecule of hydrogen. But, as we have already seen when treating of atomic weight, the molecule of hydrogen is composed of two atoms. Consequently the atom of hydrogen is equal in weight to only one-half of its molecule. As therefore a molecule of chlorine weighs 35½ times as much as a molecule of hydrogen, it will weigh 71 times as much as an atom of the same body. If then we take the weight of the atom of hydrogen as the unit for molecular weight, as it has been taken for atomic weight, we shall have 71 as the molecular weight of chlorine. Thus the molecular weight of a simple or compound substance is found by taking its density of vapour relatively to hydrogen, and multiplying by 2 the ratio obtained.

As the densities of vapour are usually taken relatively to air, and as air weighs 14·435 times more than hydrogen, the density relative to air must be multiplied by that number to bring it relative to hydrogen. Moreover, as this latter density must be doubled in order to obtain the molecular weight of a substance, we may shorten the operation by multiplying at once the density relative to air by twice 14·435, or 28·87. Therefore, to find the molecular weight of a body, multiply its density of vapour taken relatively to air by 28·87. If all bodies were volatile, nothing could be easier than to determine their molecular weight. Such, however, is not the case. A large number of compound bodies are destroyed before reaching the temperature at which they would be reduced to vapour. Hence another means of obtaining their molecular weight is required.

Either bodies are capable of entering into combination with other bodies, or they are not. Let us take the former case with an example.

Stearic acid is a fatty acid not sensibly volatile, in which a certain weight of potassium is capable of substituting itself for an equivalent weight of hydrogen. It has the closest possible analogy in properties with acetic acid, in which a substitution of potassium may likewise take place for a portion of its hydrogen, and of which the molecular weight has been determined, this substance being volatile. Experiments have proved that the molecular weight of acetic acid is 60, and that in 60 parts of this acid one of hydrogen may be replaced by 39 of potassium. If we seek the quantity of stearic acid capable of combining with 39 parts of potassium while losing one of hydrogen, we shall find this quantity to be 284. Hence 284 parts of stearic acid are equivalent to 60 parts of acetic acid, and as 60 of acetic acid represent the weight of the molecule of this acid, 284 must represent the weight of the molecule of stearic acid.

Exact results can be obtained from this method only on the condition that the bodies compared have the same molecular constitution. Thus an acid like acetic acid cannot be compared with citric acid, or at least it would be necessary to introduce into the comparison considerations of another order. Provided this condition be fulfilled, the molecular weight of a non-volatile substance capable of entering into combination with other substances may be found by determining what quantity of the substance is equivalent to the known molecular weight of a volatile matter having the same constitution. This quantity represents the weight of its molecule.

When the non-volatile substance is not capable of entering into combination, it must be subjected to the action of reagents, which destroy it. By this means new compounds are obtained, the molecular weight of which may be determined by one of the preceding methods. To find from the molecular weight of these latter, that of the primitive body, a number is chosen, which will enable the reaction to be expressed in the simplest manner, and this number is taken as its molecular weight. The results given by this method are not so trustworthy as those obtained by the preceding, to which recourse should always be had when possible.

If we take as the unit of gaseous volume, the volume of the quantity of hydrogen, the weight of which corresponds to our unit of weight, it is evident, from what has been said above, that the weight of the same volume of any simple or compound substance, considered in the gaseous state, will represent its density of vapour relative to hydrogen, and consequently the half of its molecular weight. Therefore, to find the molecular weight of a substance, multiply by 2 the weight of one volume of its vapour; or, which is the same thing, the molecular weight of a body will be equal to the weight of two volumes of its vapour. This fact is expressed by saying that all bodies have a molecular weight corresponding to two volumes of vapour.

It is evident that if half the above volume were taken as the unit of gaseous volume, the molecular weights of all bodies would correspond to four volumes of vapour. The greater number of modern chemists accept, for the sake of uniformity, the number 2; but old writers employed the number 4, a practice still persisted in by some.

Formerly the methods of determining the molecular weights were not based upon Ampère's hypothesis. Many of these weights were imperfectly known, and in treatises on chemistry only half their real value was assigned to them. Thus there were bodies whose molecular weight corresponded to two volumes, and others whose weight corresponded to four volumes. To Gerhardt is due the honour of enforcing the observance of Ampère's hypothesis, by showing that all molecular weights must correspond to one and the same gaseous volume, 2 or 4, according to the unit adopted.

There are, however, some compound substances, such as hydrated sulphuric acid and hydrochlorate of ammonia, that appear to form exceptions to this law. The molecular weight of these substances can in nowise be doubled, without at the same time doubling the atomic weights of the simple bodies which constitute them, and these atomic weights are too surely established to allow of their being modified. Yet the density of vapour of these compounds is such that their molecular weight corresponds to 4 or 8, and not to 2 or 4 volumes of vapour.

To explain this anomaly, many chemists have supposed that in these cases dissociation takes place; in other words, they have supposed that, under the influence of heat, those bodies which present anomalous densities of vapour are decomposed into two others, each occupying the volume which the primitive body would occupy alone, if it were not dissociated, that is, 2 volumes. The two bodies together therefore, according to this hypothesis, occupy double the volume we should justly expect, if the compound whose density of vapour is being determined did not become decomposed; and if the two bodies which are separate when heated are capable of uniting again when cooled, the operator does not perceive the action, and thinks, consequently, he has found an anomalous density. To explain this matter more clearly, we will take an example. Chloride of ammonia is a compound of chlorine, hydrogen, and nitrogen; and if a molecule of this substance be heated, it will be decomposed into a molecule of hydrochloric acid—a compound of chlorine and hydrogen—and a molecule of ammoniacal gas—a compound of hydrogen and nitrogen. As the number of molecules has been doubled, the volume occupied by the vapour should be doubled too. When this mixture of hydrochloric acid and ammoniacal gas becomes cool, these two substances will again enter into combination, and the two molecules will reunite into one. If this be the case, those bodies which present anomalous densities are simply bodies that are not volatilized without undergoing decomposition. And it may be remarked that the latest researches of able chemists seem to have established the hypothesis upon a sound basis.

But however exact in theory, it is none the less true in practice that errors may be committed by relying solely upon the densities of vapour to obtain the molecular weights. Whether it be due to dissociation or not, these densities may deceive us, and means are needed for verifying the molecular weights determined by them. There exists a compound of hydrogen and carbon, known as marsh gas. The density of this gaseous compound is such that the molecular weight deduced from it is equal to 16. But is this the exact molecular weight? Analysis shows that marsh gas contains $\frac{3}{4}$ of its weight of carbon and $\frac{1}{4}$ of hydrogen. If therefore its molecular weight is 16, this weight is formed of 12 parts of carbon, corresponding to one or more atoms of this substance—we say one or more because we are not supposing the atomic weight of carbon known—and 4 parts of hydrogen, which is equivalent to 4 atoms, since the atom of hydrogen weighs 1. The atom being indivisible by chemical agency, the smallest quantity of hydrogen which, in the compound in question, can be replaced by another body, is equal to 1, that is, to the quarter of the hydrogen contained in the substance. If therefore the molecular weight of marsh gas is really 16, we may substitute another simple body for the $\frac{1}{4}$, $\frac{2}{4}$, $\frac{3}{4}$, or $\frac{4}{4}$ of the hydrogen. But if the molecular weight were only 8, this gas would be composed of 6 parts of carbon and 2 of hydrogen, and, in that case, only the half of the whole of the latter element could be replaced by another, never the quarter. Again, if the molecular weight were 32, there would be 8 parts of hydrogen, and this metalloid might be replaced by eighths. Now in marsh gas the hydrogen is replaceable by quarters, and by quarters only. Therefore the molecular weight deduced from its density is the true one. In

the greater number of cases the densities of vapour give the exact molecular weight; but as there are a few exceptions, it will always be necessary to verify the results deduced by the system of substitution. See ATOMIC WEIGHTS.

MOMENTUM. FR., *Moment d'une Force;* GER., *Moment einer Kraft;* ITAL., *Impulso;* SPAN., *Momento.*

Momentum is the quantity of motion in a moving body, being always proportioned to the quantity of matter multiplied into the velocity; it also means impetus.

MORTISE. FR., *Assembler à tenon et mortaise;* GER., *Verzapfen;* ITAL., *Immorsare;* SPAN., *Mortaja.*

See JOINTS.

MOULDING. FR., *Moulage;* GER., *Formerei;* ITAL., *Imposta;* SPAN., *Moldura.*

A moulding, or molding, is anything cast in a mould, or which appears to be so, as grooved or ornamental bars of wood or metal. Architecturally, a moulding is a projection beyond the wall, column, wainscot, and so on. An assemblage of mouldings forming a cornice, a door-case, or other decoration.

MUFFLE. FR., *Moufle;* GER., *Muffel;* SPAN., *Mufla.*

See ASSAYING. FURNACE.

NEUTRAL AXIS. FR., *Axe neutre;* GER., *Neutrale Achse;* ITAL., *Asse neutro;* SPAN., *Eje neutro.*

See MATERIALS OF CONSTRUCTION, p. 2338.

NICKEL. FR., *Nickel;* GER., *Nickel;* ITAL., *Nickel;* SPAN., *Níquel.*

Nickel is a greyish-white metal, resembling silver in appearance, and capable of receiving a high polish. It is of about the same hardness as iron, and, like that metal, it is malleable and ductile. In fusibility, it is about equal to manganese, and, after it has been subjected to the process of hammering, its specific gravity is 8·66. Its atomic weight is 59. Molecular weight, unknown. It is strongly magnetic at ordinary temperatures, but loses this property when heated up to 660° Fahr.; and it is so little oxidizable that it may be exposed for a long time to a moist atmosphere without undergoing change. Dilute hydrochloric and sulphuric acid dissolves it with a development of hydrogen gas, and nitric acid oxidizes it very readily. Carbon forms with nickel a compound more fusible than the pure metal, and analogous in this respect to cast iron. Only one combination of this metal with each of the halogen metalloids is known; this combination corresponds to the formula $Ni\,R^2$.

Nickel occurs in a native state only in meteoric stones, in which it is always present in association with iron. It is found in considerable abundance in certain parts of Germany, Hungary, and Sweden, where it occurs in the form of *Kupfernickel*, so called from its colour, being a combination of nickel and arsenic. The metal is obtained on a large scale, for the purpose of making German silver and other alloys, chiefly from this compound. It may be obtained in small quantities by reducing one of its oxides by means of hydrogen at a high temperature, or by exposing the oxalate to a very high temperature in a crucible lined with charcoal.

Oxygen combines with nickel in two proportions, forming thus the protoxide $Ni\,O$ and the sesquioxide $Ni_2\,O_3$. To the protoxide corresponds a hydrate $\left.\begin{matrix}Ni\\H_2\end{matrix}\right\}O_2$.

The hydrogen of this hydrate is replaceable by acid radicals, and salts of nickel are formed which may be called minimum salts. The sesquioxide loses oxygen in the presence of the oxides, and is thus converted into minimum salts; when in contact with hydrochloric acid, it develops chlorine by giving protochloride. No salt of nickel is known corresponding to it. The single sulphate and the double sulphates generated by nickel are isomorphous, not only with the sulphates of cobalt, but also with the minimum sulphates of iron and manganese, and with those of the metals of the magnesian series.

The tetratomic character of nickel, like that of cobalt, is very difficult to establish. We have in this case only one compound on which to base this character, namely, the sesquioxide, an unstable substance, incapable of forming salts, which substance may be considered as resulting from the aggregation of several molecules of oxygen, and therefore proving nothing. On the other hand, nickel is closely allied to zinc, magnesium, &c. It would consequently appear more rational at first sight to class it among the diatomic metals. But there are sufficient reasons for placing cobalt with iron, and the extreme analogy between nickel and cobalt obliges us to place the former in the class of tetratomic metals, with the acknowledgment that if its real or absolute atomic character is equal to 4, its apparent or manifested character is always equal to 2.

Characteristics of the Salts of Nickel.—The following are the characteristics of the salts of nickel;—

1. They are of an emerald green colour.
2. The fixed alkalies produce in them an apple-green precipitate of hydrate of nickel.
3. Ammonia partially precipitates the very neutral salts of ammonia. But if these salts are acid, or contain an ammoniacal salt, ammonia will not precipitate them. When the precipitation takes place, the precipitate dissolves in an excess of the reagent, and the liquor assumes a blue colour.
4. Hydrosulphuric acid does not precipitate them; the alkaline sulphurets produce in them a black precipitate insoluble in acetic acid and in dilute hydrochloric acid.
5. Cyanide of potassium produces in them a precipitate soluble in an excess of the reagent. This precipitate is reproduced when the liquor is saturated by sulphuric acid. Nickel is by this property distinguishable from cobalt; for though, with the salts of the latter metal, cyanide of potassium forms a precipitate also soluble in an excess of the reagent, when once the precipitate is dissolved it cannot be reproduced by sulphuric acid.

NORIA. FR., *Noria;* GER., *Noria, Paternosterwerk;* ITAL., *Noria;* SPAN., *Noria.*

A large water-wheel turned by the action of a stream, and carrying at its circumference buckets by which water is raised and discharged into a trough at the top.

See MECHANICAL MOVEMENTS, Fig. 5792.

NUTS AND BOLTS. Fr., *Ecrou et boulon*, Ger., *Schraubenbolzen und Mutter*; Ital., *Chiavarda e Dado*, Span., *Tuercas y pernos.*

A nut is a small block of metal or wood containing a concave or female screw used for retaining a bolt; the nut is screwed upon the end of the bolt upon the latter being passed through the bodies to be held together. The following Tables furnish particulars as to the weight and dimensions of iron nuts and bolts;—

TABLE OF HEXAGON NUTS AND BOLT-HEADS.

Diameter of Bolt in inches.	Width of Nut over Angles.	Width of Nut over Sides.	Thickness of Head.	Thickness of Nut.	Diameter of Bolt in inches.	Width of Nut over Angles.	Width of Nut over Sides.	Thickness of Head.	Thickness of Nut.
¼	7/16	⅜	¼	¼	1 1/8	2 1/8	1 7/8	1	1 1/4
5/16	5/8	9/16	5/16	5/16	1 3/8	2 3/8	2 1/16	1	1 3/8
⅜	5/8	9/16	5/16	⅜	1 1/2	2 5/8	2 1/4	1 1/8	1 1/2
7/16	7/8	¾	7/16	7/16	1 5/8	2 7/8	2 1/2	1 1/4	1 5/8
½	7/8	¾	7/16	½	1 3/4	3	2 5/8	1 3/8	1 3/4
9/16	1	⅞	½	9/16	1 7/8	3 1/4	2 13/16	1 1/2	1 7/8
⅝	1 1/8	1	⅝	⅝	2	3 1/2	3	1 5/8	2
¾	1 3/8	1 3/16	¾	¾	2 1/4	3 7/8	3 3/8	1 3/4	2 1/4
7/8	1 1/2	1 5/16	¾	7/8	2 1/2	4 3/8	3 3/4	2	2 1/2
1	1 3/4	1 1/2	7/8	1	2 3/4	4 3/4	4 1/8	2 1/4	2 3/4
1 1/8	1 7/8	1 5/8	7/8	1 1/8	3	5 1/4	4 9/16	2 1/2	3

WEIGHT OF NUTS AND BOLT-HEADS IN LBS.

Diameter of bolt in inches	¼	⅜	½	⅝	¾	⅞	1	1¼	1½	1¾	2	2½	3
Weight of hexagon nut and head ..	·017	·057	·128	·267	·43	·73	1·10	2·14	3·78	5·6	8·75	17	28 8
Weight of square nut and head	·021	·069	·164	·320	·55	·88	1·31	2·56	4·42	7·0	10 5	21	36·4

OBLIQUE ARCH. Fr., *Arc de côté*; Ger., *Der schiefe Bogen*; Ital., *Arco obliquo*, Span, *Arco oblícuo.*

Oblique arches have been briefly treated of under the general heading of Bridge, and the several systems were, in that place, described and discussed. But the subject was there considered from a theoretical rather than a practical point of view, the object being mainly to explain the nature of the lines employed, and to demonstrate the correctness of the methods by which these lines are obtained; and although some practical processes were necessarily introduced, no attempt was made to render the treatment other than purely mathematical. The present article, on the contrary, is intended to be wholly practical. It will treat of the design and construction of oblique bridges as actually made and carried out by the engineer and the contractor.

An oblique or, as it is commonly called, a *skew* bridge is one in which the passages over and under the arch intersect each other obliquely. In conducting a railway through a district in which there are many natural or artificial water-courses, or in making a canal through a country in which roads are frequent, such intersections often occur. Before the introduction of railways skew bridges were seldom erected, it being more usual to build the bridge at right angles, and to divert the course of the road or the stream to accommodate it. But in a railway, and sometimes in a canal, such a deviation from the straight line of direction is inadmissible, and it therefore becomes necessary to build the bridge obliquely. In such a case, the axis of the arch is oblique to the face, and the angle which the axis makes with a perpendicular to the face is called its *angle of obliquity.* The distance by which one abutment, or line of springing, extends beyond the other, and which is, of course, dependent upon the angle of obliquity, is termed the *distance of obliquity* A skew arch has a direct and an oblique span; the former, or span on the square, is the perpendicular distance between the abutments, the latter, or span on the skew, is the distance between the abutments parallel to the face of the arch. The former is less than the latter in the ratio of the cosine of the angle of obliquity to unity. It is the span on the skew which is equal to that of the corresponding rectangular arch.

Rectangular and oblique arches are identical in their main features, and hence the fundamental principles of construction will be common to both. But in the latter the details of construction differ considerably from those adopted for the former kind. This difference is chiefly due to the altered position and form of the joints. The bed-joints in an arch should be perpendicular to the thrust along the arch, and to determine this position in the skew arch is a matter of some difficulty. If we draw upon the soffit of an arch of this kind, a series of parallel curves made by the intersections of the soffit with vertical planes parallel to the face, the best form for the bed-joints will be a series of curves drawn upon the soffit, and cutting the first series everywhere at right angles. But as these joints would be difficult of execution, spirals are in practice used as an approximation. The beds of the arch stones in a skew arch are consequently spiral surfaces instead of plane surfaces, as in the case of the rectangular arch, and the delineating and working of these spiral surfaces constitute the principal difference between the oblique and the symmetrical arches in the design and execution of the work. Preparatory to the construction of a skew arch a large drawing

of the soffit must be made, showing the exact shape and position of every arch stone. This drawing is the *development* of the curved surface, that is, it is a representation of that surface as if *spread out flat*. As it is essential that the spiral surfaces should be accurately drawn and worked, it is necessary to possess ready means of determining these surfaces in the drawings with the utmost precision, as well as the dimensions of the templates from which these surfaces are worked.

The spiral form was first introduced by Nicholson, and explained by him in two works entitled Stone-cutting, and A Guide to Railway Masonry, published about the year 1828, and the methods which he employed are still in use almost without modification. Nicholson may indeed be justly regarded as the originator and perfecter of the present system of oblique bridge building, and any treatise upon that subject can hardly be more than an elucidation of the principles and the practice which he laid down and described. These principles and processes we shall now endeavour to explain.

The following processes in descriptive geometry are employed in oblique bridge construction.

1. *The Right Section of a Cylindric Arch and the Angle of Obliquity being given, to find the Oblique Section.*—Let A B C, Fig. 5971, be the right section of a semicircular arch. Draw the diameter

5971.

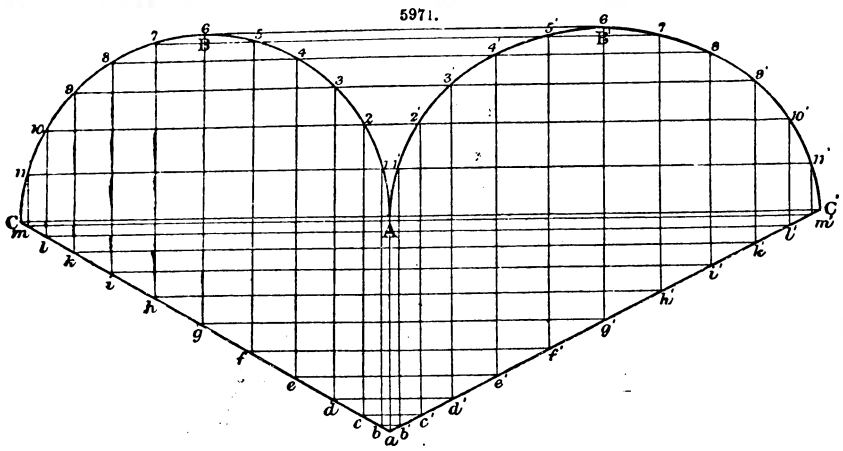

A C, and upon the extremity A erect a perpendicular A *a*. From the opposite extremity C draw C *a* to meet the perpendicular in *a*, making the ang'e A *a* C equal to the angle of obliquity. Produce the diameter C A to C', and make A C' equal to C *a*. Join C' *a*. Divide the arc A B C into any number of parts, as 1, 2, 3, and project these points upon C *a*, as *a*, *b*, *c*, *d*. Project these latter points upon C' *a*, and from the points of projection in C' *a* erect perpendicular lines. The intersections of these lines by horizontals to A C', drawn from the points of division in the arc A B C, will be points in the curve required.

5972.

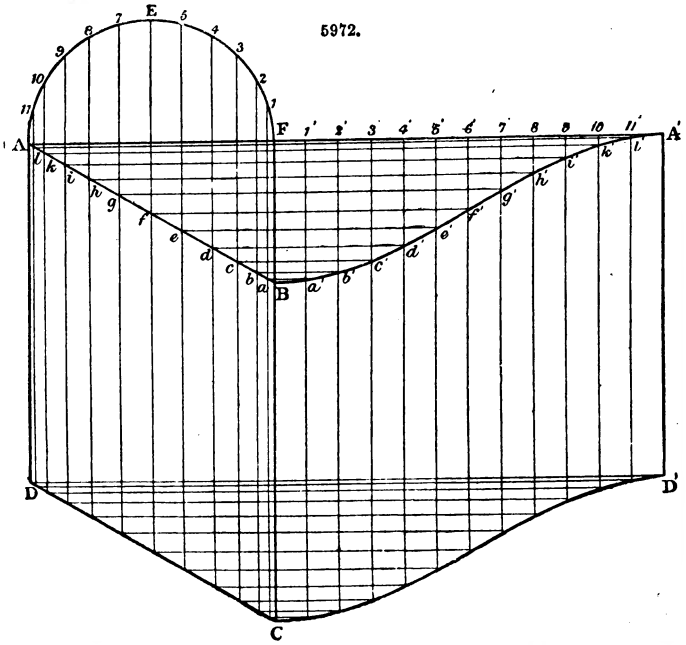

To find the Development of the Curve of the Oblique Section.—Let A B and C D, Fig. 5972, be the plans of the curves of oblique section whose development it is required to determine. Draw A F perpendicular to A D, and upon A F describe the rectangular elevation of the arch A E F. Produce A F to A', making F A' equal to the arc F E A. Divide the arc F E A into any convenient number of equal parts, as 1, 2, 3, and the line F A into the same number of equal parts. From these points of division draw lines parallel to A D, and from *a*, *b*, *c*, the points in which these lines meet A B, draw other lines parallel to A F. The points of intersection *a'*, *b'*, *c'*, will be points in the curve sought.

It is obvious that the curve C D' which is the development of C D, will be equal, similar and

parallel to B A'. Therefore, to obtain this development, repeat the operation upon C D; or, which is often more convenient in practice, transfer the curve B A' to C D' by means of a mould.

To Project a Spiral Line upon a Cylindric Surface.—Let A B C D, Fig. 5973, be a semi-cylinder, in this case a right cylinder, of which A E B is the elevation. Divide the arc A E B into any

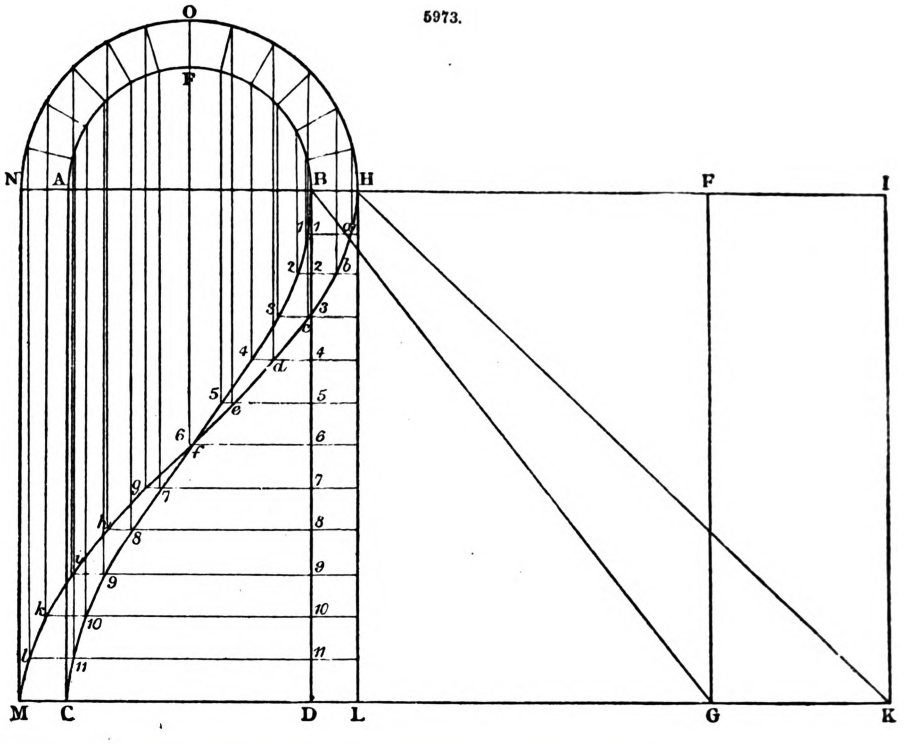

convenient number of equal parts, and from the points of division draw lines parallel to A C or B D. Divide B D into the same number of equal parts, and from these points of division draw lines perpendicular to A C or B D. The points of intersection of these two series of lines will be points in the spiral required.

Produce A B, and make B F equal to the arc A E B. Also produce C D, and make D G equal to B F. Draw the diagonal B G. Then the parallelogram B F D G will be the development of the cylindric surface A B C D, and the diagonal B G will be the development of the spiral B C. The angle of the spiral, or angle of the twist, is the angle D B G.

To Project a Spiral Surface.—Let A B C D, Fig. 5973, be the inner surface and N H M L the outer surface of a semi-cylinder, of which A E B, N O H, is the end elevation. Project the spiral H M of the outer surface in the same way as the spiral B C of the inner surface was projected. These spirals will bisect each other, and the space included between them will be the projection of the spiral surface. The breadth of this surface is the thickness B H of the cylinder.

Produce N H, and make H I equal to the arc N O H. Produce likewise M L, making L K equal to H I, and draw the diagonal H K. Then the parallelogram H I L K will be the development of the cylindric surface N H M L, and the diagonal H K will be the development of the spiral H M. The angle of the twist, in this case, is the angle L H K.

As the spirals are all similar and parallel, if we draw all those of the inner surface, or intrados, by means of a cardboard mould cut to B C, and those of the outer surface, or extrados, by means of another similar mould cut to H M, we shall have the whole projection of the screw.

We shall now show how the development and the plan of the soffit and the extrados of an oblique arch are obtained.

Suppose it were required to build a skew bridge over a road, the width of which is A F, Fig. 5974, at an angle equal to A B F. The direct span of this bridge is the distance A F, and the oblique span is equal to $\frac{\text{A F}}{\text{sin. A B F}}$, or A B. The skew width of the bridge is the distance A C or B D, and the thickness of the arch, as shown in the end elevation, is A G. It is required to find the development and the plan of the soffit and the extrados of this bridge.

Project, in the way already described, the development of the curves of oblique section A B and C D, and join by straight lines the points B A', D C'. Upon the extremity B of the line B A' erect the perpendicular B M. The line B M will show the direction of the coursing joints, and will be the development of the spiral forming the first complete coursing joint. Divide the line B A' into a sufficient number of parts to represent the several courses of stone, if the arch is to be of stone, choosing an odd number in order that there may be a keystone; and through the points of division draw straight lines parallel to B M, terminating at the curves. These lines will be the developments of the spiral coursing joints; those which intersect the springings, as *a*, *b*, *c*, 9, 10, 11,

are partial joints, the rest are complete joints. If now lines be drawn from the points a, b, c, parallel to B A′, these will be the developments of the heading joints. The latter, however, are not continuous like the coursing joints, but are drawn in the manner shown in a subsequent figure. The oblique cylindric surface A B D C is the soffit or intrados of the arch, and B A′ C′ D is the development of this surface, which it was required to determine.

We have now to obtain the development of the extrados, or outer surface of the arch. Upon the direct span A F, Fig. 5975, describe the semicircle A E F, and produce A F to G and I, making A G and F I equal to the thickness of the arch. Upon G I describe the semicircle G H I, and from the points G, A, F, I, draw G Q, A C, F D and I N perpendicular to G I. Draw G P, and make the angle G P I equal to the angle A B F in Fig. 5974, which is the angle of obliquity. Also

5974.

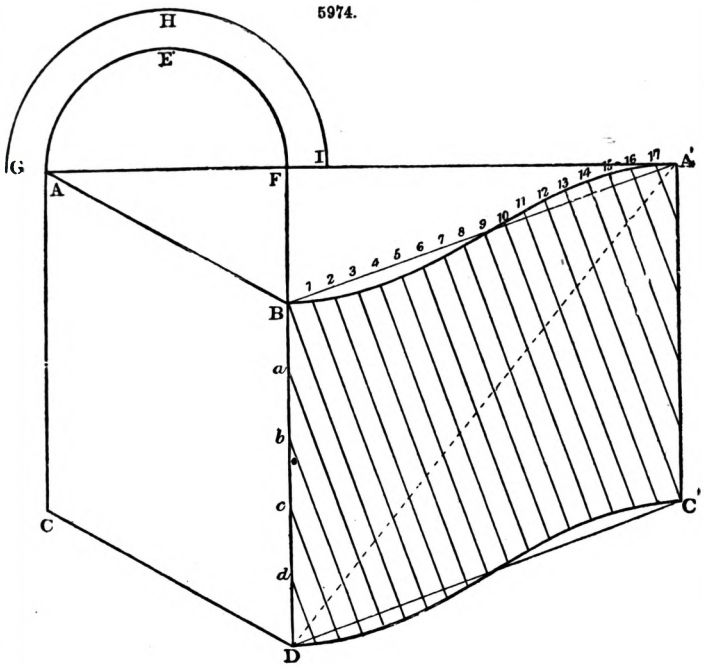

5975.

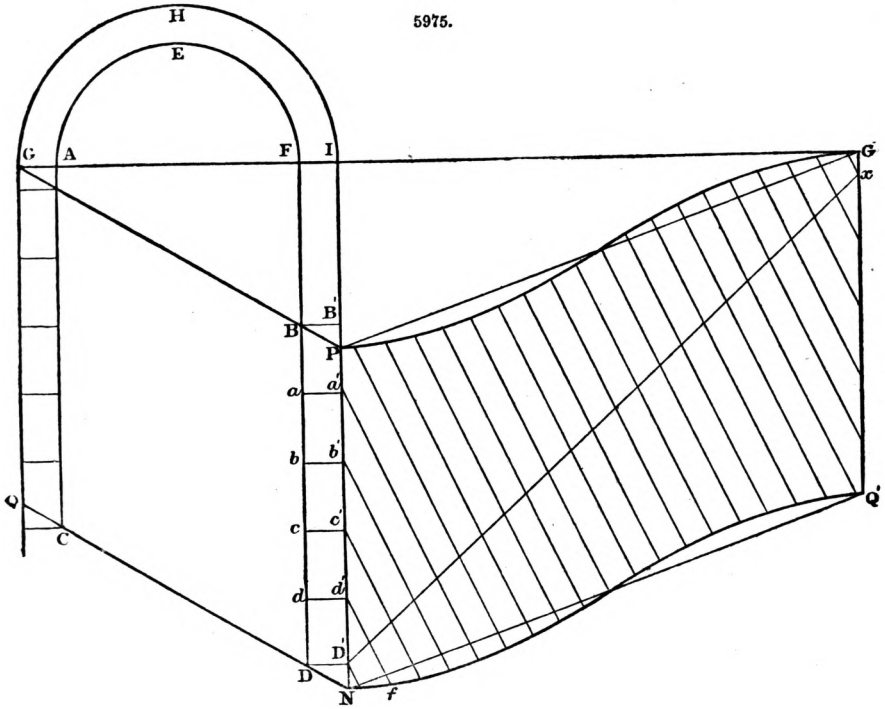

draw Q N parallel to G P at the distance B D in Fig. 5974, which is the skew width of the arch. Then shall A B D C and G P N Q be respectively the soffit and the extrados of the arch, of which A E F and G H I are the rectangular end elevations. It is required to find the development of the surface G P N Q, the extrados of the arch.

Determine, in the manner already described, the developments of the curves of oblique section G P and N Q, and join the points P G′ and N Q′ by straight lines as before. From the points of division B, a, b, c, d, D, on the line B D draw, perpendicular to B D, the lines B B′, &c. a a′. Set

off δ upon G′ Q′, a length G x equal to N D′, and join D′ x. Divide the line D′ x into the same number of equal parts as B A′, B D, Fig. 5974, or, which is the same thing, into the same number of equal parts as the dotted line D A′ is divided into by the intersections of the coursing joints. Then, through the points d' and the first division upon D′ x, draw $d'f$, which will give the direction of the coursing joints. The whole of the remaining coursing joints are drawn parallel to this one $d'f$, through the other points of division upon D′ x. If, from the points a', b', c', d', we draw, in the manner shown in the next figure, lines perpendicular to the coursing joints, these lines will be the developments of the heading joints; and P G′ Q′ N will be the development of the oblique cylindric surface G P N Q, which is the extrados of the arch.

In the preceding examples we have supposed the arch to be semicircular; the same principles and processes, however, apply equally to the segmental arch.

It now remains to find the plan of the soffit and that of the extrados. Let A B D C, Fig. 5976,

5976.

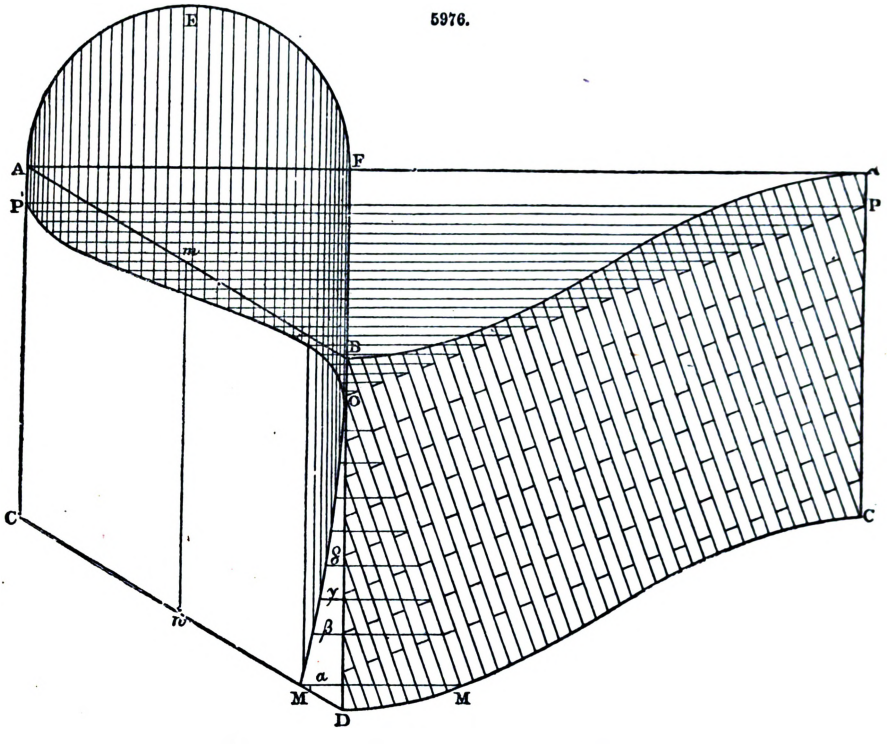

be the surface of the soffit or intrados, of which B A′ C′ D is the development obtained by the processes already explained. It is required to find upon the surface A B D C the position of the joints shown in the development.

Divide the semicircle A E F into the same number of equal parts as there are in the curve B A′, which parts there represent the coursings, and from the points of division draw lines perpendicular to A F. From each of the heading joints upon the first entire coursing joint B M, draw other lines parallel to A F. The intersections of these two sets of lines will be points in the curve B M′, which is the position on the intrados of the joint B M. The other coursing joints may be projected in the same way; but the readiest method is to cut a cardboard mould of the curve B M′ and to draw the remaining joints from this mould. Next, from the ends of one of the heading joints O P, draw lines parallel to A F. The intersections of these lines with those drawn from the points of division in the arc A E F will be points in the curve O P′, which is the position on the intrados of the heading joint O P. If a cardboard mould of this curve be now cut, the heading joints may be easily drawn upon the intrados. The whole plan of the intrados may be obtained in this way. To obtain the plan of the extrados proceed in a similar manner with the development of that surface.

5977.

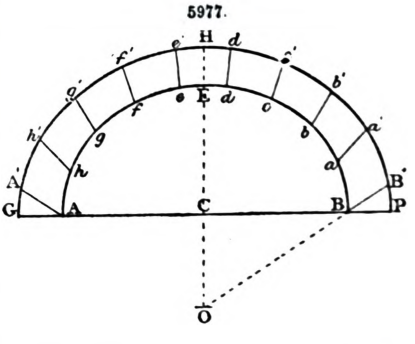

We have now to find the elevation of the face of the arch, as dependent on the foregoing principles.

Find the oblique section of the arch A E B, G H P, as shown in Fig. 5977; then the semi-ellipse A E B will be the elevation of the soffit, and the semi-ellipse G H P will be the elevation of the extrados. Divide A E B into parts equal to the divisions on the curve B A′, Fig. 5974, that is, to the courses shown on the development of the soffit. Also divide G H P into parts equal to the divisions on the

curve P G′, Fig. 5975, the development of the extrados. If these points be joined, the lines B B′, $a\,a'$, $b\,b'$, will represent the joints in the face of the arch, and the elevation of the face will be complete. The lines B B′, $a\,a'$, are, however, not straight lines, but curves, concave on the upper side, B B′ being the most concave, and the others diminishing in concavity as they approach the vertex, where it disappears altogether. If a third development were made at half the thickness of the arch, we should have a middle series of points, and thus three points in the curve would be obtained. In a drawing to a small scale the curvature will not be apparent.

Some of the preceding processes of descriptive geometry are difficult of execution in the case of very large drawings, and calculation may then be advantageously substituted for those processes. J. Watson Buck was the first to call special attention to the methods of determining by calculation the several dimensions of a skew arch, and in a work which he has published on the subject he has given some simple formulæ by which those dimensions may be readily and accurately determined. The processes described by Buck have been further simplified by W. H. Barlow; and, thanks to the labours of these engineers, all the angles and dimensions of an oblique arch, as well as the twisting rules and templates used in working the stones, can now be easily obtained by the method of calculation. We shall consider some of the preceding figures in reference to this method.

Let r represent the radius of the cylinder, e the thickness, and θ the angle of obliquity. Then in Fig. 5974, A F $= 2\,r$, F B $= 2\,r$ cot. θ, F A′ $= \pi\,r$, A B $= 2\,r$ cosec. θ, and tan. F A B $= \dfrac{\text{F B}}{\text{F A}} = \dfrac{\text{cot. } \theta}{\frac{1}{2}\,\pi}$ = tan. of angle of skewback of intrados. In Fig. 5975, I G′ $= \pi\,(r + e)$, $\dfrac{\text{cotan. } \theta}{\frac{1}{2}\,\pi}\left(\dfrac{r+e}{r}\right)$ = tan. of angle of skewback of extrados, and B′ P $= e$ cotan. θ. In Fig 5977 the lines B B′, $a\,a'$, which are the chords of the small curves forming the joints in the face of the arch, all radiate from a centre O, the position of which centre may be found either by calculation or by geometry. By similar triangles, B P : P B′ :: B C : C O, or as e cosec. θ : $\dfrac{\text{cot. } ^2\theta}{\frac{1}{2}\,\pi}\left(\dfrac{r\,e + e^2}{r}\right)$ :: r cos. θ : $\dfrac{\text{cot. } ^2\theta}{\frac{1}{2}\,\pi}\,(r + e)$ = C O. Therefore C O $= r$ cotan. θ tan. φ, φ being the angle of the skewback of the extrados. Or C O $= (r + e)$ cot. θ tan. β, β being the angle of the skewback of the intrados.

5978.

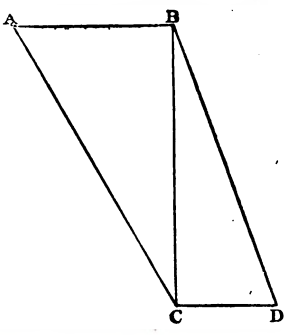

To determine the distance C O geometrically, draw A B, Fig. 5978, $= r + e$; and from A draw A C to meet a perpendicular from B at an angle equal to the angle of obliquity. Also draw B D indefinitely, making the angle C B D equal to the angle of the skewback of the intrados. Then C D drawn perpendicular to B C = C O.

As it is usually desirable to show the curvature of the joints in the face of the arch, a semi-ellipse must be described for the mean thickness, and $r + \frac{1}{2}\,e$ substituted for $r + e$ in the first expression of the value of C O. By this means the intermediate points may be obtained.

Of the preceding formula, those which give the value of C O apply both to the semicircular and to the segmental arch; but the rest apply only to the semicircular. We will now give those which are applicable to the segmental arch.

Let a be the arc of the segment and c its chord. Then c cosec. θ = the oblique span; c cot. θ = the distance of obliquity; $\dfrac{c\text{ cot. }\theta}{a}$ = tan. of angle of skewback of intrados, and $\dfrac{c\text{ cot. }\theta}{a}\left(\dfrac{r+e}{r}\right)$ = tan. of angle of skewback of extrados. Substituting this value of the tan. of the extradosal angle for that given in the formula for the semicircular arch, we have

$$e \text{ cot. } \theta \times \frac{c \text{ cot. } \theta}{a}\left(\frac{r+e}{r}\right) = \frac{c \text{ cot. } ^2\theta}{a}\left(\frac{r\,e + e^2}{r}\right) = \text{P B′ in Fig. 5975.}$$

And as

$$c \text{ cosec. } \theta : \frac{c \text{ cot. } ^2\theta}{a}\left(\frac{r\,e + e^2}{r}\right) :: r \text{ cosec. } : \frac{c \text{ cot. } ^2\theta}{a}\,(r + e) = \text{C O.}$$

When C O has been determined, the only development required will be B A′ in Fig. 5974. It is now requisite to show how the ordinates of this curve are obtained.

Let B C, Fig. 5979, be the half of a semicircular arch, the obliquity of which is C D A. It is required to obtain the development D b' A′ by calculation. Divide the arc B C, and its development C A′, into the same number of equal parts. Let a be one of the divisions in the arc, and a' its corresponding division on the development; then A′ a' = B a. Also let A B, the radius, be represented by r, the angle B A a by δ, the angle C D A by θ, and the angle C A D by β. We have A $d = r$ sin. δ; $d\,b = r$ sin. δ cot. $\theta = a'\,b'$; A′ a' tan. $\beta = a'\,f$, and $a'\,b' - a'\,f = f\,b'$.

When a sufficient number of divisions $f\,b'$, corresponding to equal divisions on the arc B C, or its development C A′, have been obtained, divide D A′ into the same number of equal parts, as shown in Fig 5980, at a, b, c; a', b', c'. The two halves of the curves being similar, it is only requisite to find one half of the ordinates, and to apply them on both sides of the line A B. Therefore, at each of the divisions b, c, d, draw the ordinates $f\,b'$, Fig. 5979, and make all the angles D $f\,b'$ equal to the angle C A′ D, the intradosal angle. Through the points thus obtained, draw the curve D b' A′, which will be the development of A D, half the given curve.

We now come to the consideration of the methods of working the voussoirs preparatory to the

erection of a skew bridge. Evidently the bed of a voussoir is a portion of the spiral surface B H M C, Fig. 5973, and these spiral surfaces on the stones are called winding beds. To obtain

5979.

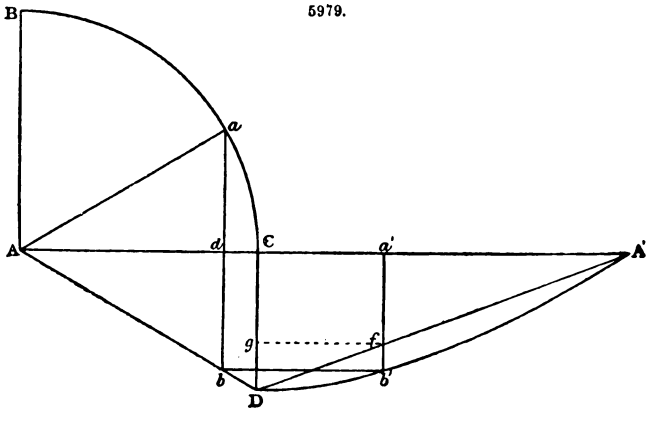

5980

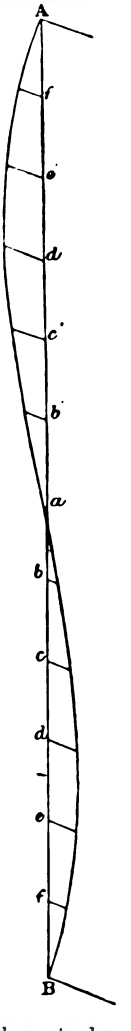

these beds, the workman employs what he calls a winding strip, but which is more generally known by the name of *twisting rules*. These twisting rules consist of two straight-edges held at a determinate distance apart by two light iron rods. One of these straight-edges, or rules, is usually 3 in. broad, and has both its edges parallel; the other is of the same breadth as the first at one end, but increases in breadth towards the other end, according to the angle of the twist. Both rules are equal in length, and that length must be exactly equal to the depth of the voussoirs. To obtain the winding bed, the workman sinks each of these rules into a draft in the stone until their upper edges are in the same plane; their under edges are then in the intended winding bed. The superfluous parts of the stone are then cut away until a straight-edge applied from one draft to the other, and kept parallel to the soffit, everywhere coincides with the surface of the bed.

As the winding beds are cut to the twisting rules, it is essential that these rules be accurately determined and constructed. We shall now show how their dimensions are determined. Let A B C D and E F G H, Figs. 5981, 5982, be the two rules. The edge C D of Fig. 5981 is parallel to the edge A B; but the edge G H of Fig. 5982 is divergent from the edge E F. The breadth E G is equal to the breadth A C, and the breadth F H exceeds the breadth E C by the quantity H I, the value of which depends upon the angle of the twist. To find the value of H I, let d represent the distance of the rules apart at the extrados, and δ the angle of the twist. Then $H I = d \sin. \delta$. The rules must not be parallel, but convergent; that is, the distance of the rules apart on the soffit is less than at the extrados, and the difference is in the ratio H K : B G, Fig. 5973. If we represent the distance of the rules apart on the soffit by d', we have therefore $d' = d \frac{\text{sec. } \beta}{\text{sec. } \phi}$, β being the angle of the intrados and ϕ the angle of the extrados, as in the formula given above. Fig. 5983 shows the twisting rules adjusted in accordance with these principles.

5981.

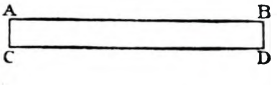

5982.

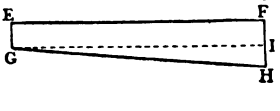

5983.

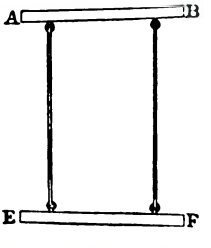

When one of the winding beds has been prepared in the way described above, the soffit must next be obtained, and to do this a template is required. To make this template, the spiral curve must be developed to a scale sufficiently large to measure from; or it may be obtained from the course lines and the face line as drawn upon the laggings at the time of erecting; the latter is the readiest mode for the workmen.

It is a somewhat difficult matter to shape the stones which form the face of an oblique arch with such accuracy that they shall not require to be pared after being set. The following method of obtaining the template for each quoin stone was first published in the Civil Engineer and Architects' Journal for 1841, and though others have been resorted to since, the merit of being the readiest and the most expeditious must still be claimed for this one.

Let $m n$, Fig. 5984, be the elevation of the half arch on the square, and $o r$ its radius. Make $r s =$ radius $\times$ sin. β, and with the distance $r s$ as a radius, describe the arc $q s$. Produce $n r$ to y, making $r y =$ radius $\times \frac{\text{sin. } \phi}{\text{cot. } \theta \times \text{tan. } \phi}$. From the joints $a b c d e f$ draw lines to the centre r, intersecting the arc $q s\ a' b' c' d' e' f'$. From the points $a' b' c'$, &c., draw horizontal lines, and from the points $a b c$ draw vertical lines, intersecting the former in $a'' b'' c'' d'' e'' f''$. And from these last points draw

lines to y, as shown in the figure. Then applying the curve of the intrados, so that $t\,v$ is a tangent to it at y, the templates for each stone will be found from the figure.

The following is another method of obtaining the templates for working the beds and soffits of the arch stones, directly from the drawing of the development of the intrados. Let A B C D, Fig. 5985, be the development of the intrados, of which the semicircle D E F is the right elevation. Erect F G perpendicular to D F, and draw D G parallel to the coursing joints meeting F G in G. Draw G B′ parallel to B A, to meet D B produced. From the points of division in the arc D E F, erect lines parallel to F G; these lines will cut D G and B′ G in the points 1, 2, 3. From these points, and perpendicular to D G, and B′ G, draw $1\,a'$, $2\,b'$, $3\,c'$, $1\,a''$, $2\,b''$, $3\,c''$, equal to $1\,a$, $2\,b$, $3\,c$, the distances from the chord to the points of division in the arc D E F. Draw, through the points thus obtained, the curves D $a'\,b'\,c'$, G, and B′ $a''\,b''\,c''$, G. From these segments the arch-curves or bevels may be constructed, by making the inner edge of the curved limb in Fig. 5986 identical with the half segment of G B′, Fig. 5985, and the inner edge of the curved limb in Fig. 5987 identical with the half segment of G D, Fig. 5985. The inner edge of the other limb of the bevels is straight.

To find the angle of the twist, produce D F, Fig. 5985, to H, and upon F H set off H I equal to the radius of the arc D E F. From the point H erect H L perpendicular to F H, and from the point I draw I L parallel to D G, which is parallel to the coursing joints in the development A B C D, meeting H L in L. From I set off I K

5984.

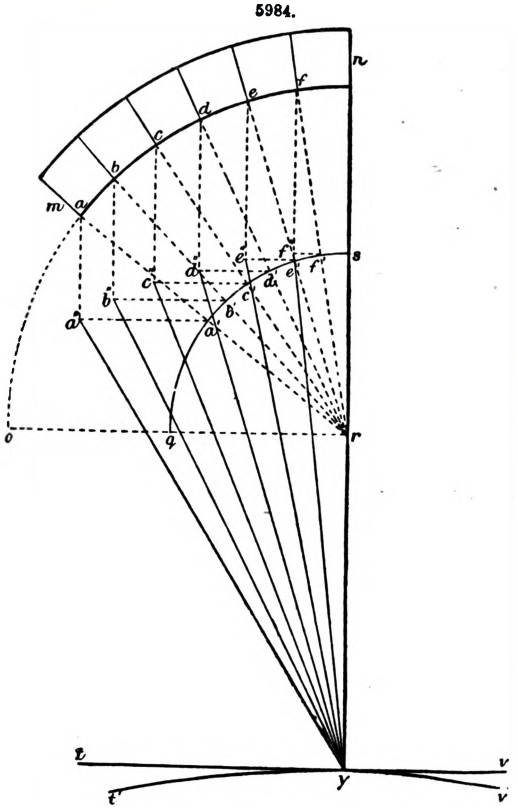

5985.

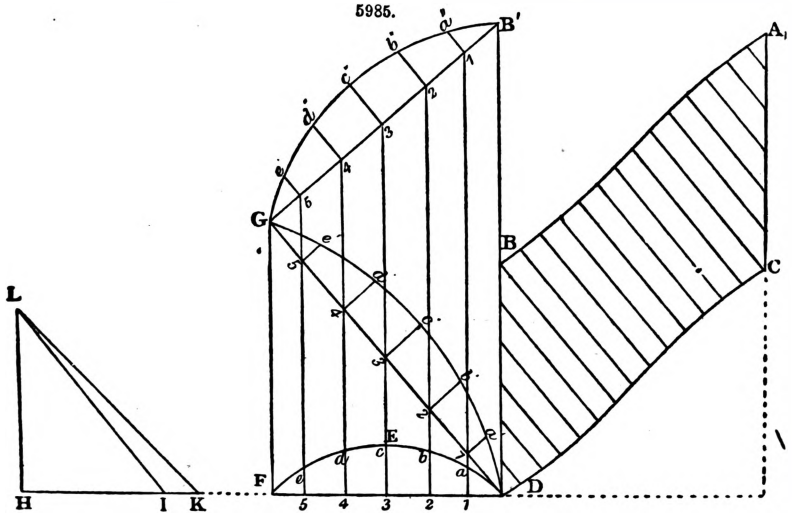

5986.

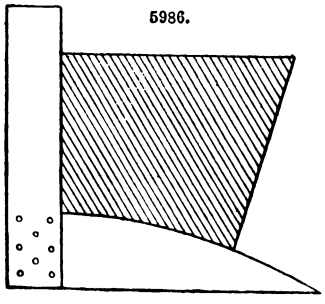

5987.

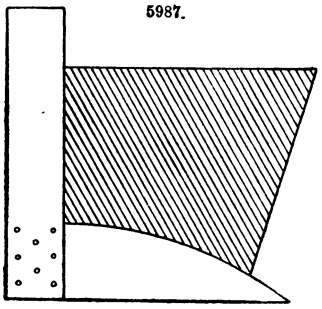

equal to the breadth of the beds of the stones, and join K L. The angle I K L is the angle of the twist.

We shall now show how one of the arch stones is worked by means of the templates obtained in the manner described above. Suppose the stone, all the faces of which are rectangular, to be lying upon one of its beds, with the soffit next the workmen, and consequently its other bed uppermost Having applied the template D G, Fig. 5985, in such a way that the curved edge may rest upon each end of the nearest arris, draw a line upon the surface of the stone by the curved edge of the template. This line will be the bed line between the soffit and that bed. It must be observed that the curve will be concave to the adjacent arris of the stone. The twisting rules must now be applied in such a way that the parallel rule shall rest upon the nearest arris that is to be cut away, and the rule containing the angle of the twist be at a distance equal to the intended breadth of the bed. The latter rule must then be sunk into the stone until the upper edges of the two rules are out of winding. The bottom of the chisel draft will make an angle with the surface of the stone equal to the angle of the twist. The superfluous stone between the draft and the bed line is to be cut away, until the surface everywhere agrees with a straight-edge applied from any point perpendicular to the curve forming the bed line.

When one winding bed has been worked, the next step is to form the soffit. This is done by applying the bevel shown in Fig. 5987 in the same way as a common square is applied. Each limb of the bevel is to be perpendicular to the arris, or to a tangent to the curve which forms the arris or bed line, so that the straight-edge may coincide with the surface of the bed, and the curved edge rest upon the superfluous stone of the soffit which is to be cut away. The stone is then worked off until the curved edge of the bevel coincides with the surface of the soffit, which will be that of a cylinder. The soffit must then be gauged to its breadth, and the other winding bed worked with the same bevel. The curved edge is, of course, applied to the soffit, and consequently the straight-edge will be upon the winding bed. It may be remarked here, that the method of working the beds of the voussoirs forming the face of the arch in such a way that the joints shall be at right angles to a tangent to a curve at that point, though generally adopted by engineers of all countries, seems objectionable on the grounds of insecurity and difficulty of execution.

The impost upon which the arch rests must be divided into as many equal parts as there are courses intersecting the springings, and as many triangular checks sunk in it. Fig. 5988 is an

5988.

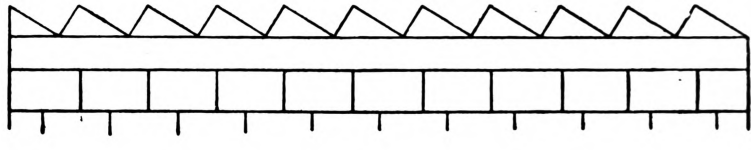

5989.

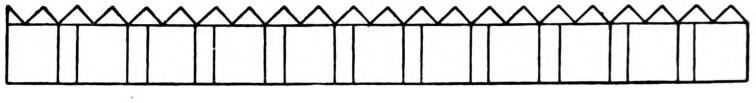

elevation, and Fig. 5989 a plan of the impost parallel to the axis of the cylinder, the number of checks in this case being eleven. To mark these checks upon the springing stone, triangular templates of sheet iron or wood are required. These templates are obtained in the following manner. Construct a right-angled triangle, Fig. 5990, having the side $a\,c$ equal to the length of the check on the impost, and the side $a\,b$ equal to the thickness of the courses. This will be the triangle of the intrados. To obtain the triangle of the extrados, let fall the perpendicular $b\,f$, and produce $b\,f$ to d, making $f\,b : f\,d :: r : r + e$; r being the radius of the cylinder and e its thickness. Join $d\,a$ and $d\,c$. These triangles, cut out in wood or sheet iron, will be the templates required. To use the templates, apply them with the side $a\,c$, or hypothenuse downwards, and, keeping the extremities a and b against each of the divisions in succession, score by the perpendicular and the base. The back or extrados of the impost must, of course, be marked from the template of the extrados. The difference in the angle of the two will give the proper degree of wind in the bed and the cross joints of the checks of the impost.

5990.

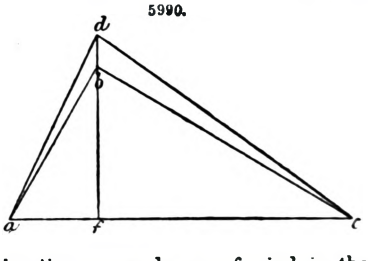

As the thrust of the arch is parallel to the face, a proper abutment should be given it in this direction by working the back of the impost in vertical steps, having their sides respectively parallel and perpendicular to the face. When the wall behind the impost is of brick, the width of the step at right angles to the thrust should be made such that the bricks may not require cutting, that is, it should be made to correspond to a brick, a brick and a half, as the obliquity of the arch may require. These vertical steps are shown in the plan of the impost, Fig. 5989.

It now only remains for us to describe how the design is carried out on the ground, that is, the practical methods adopted for ensuring the correct execution of the work.

When the imposts have been prepared in the manner described above, the centre should be erected and well lagged. Too much importance cannot be attached to the careful execution of this part of the work. This is true of all arches, but more especially true is it of oblique arches. The

laggings should be evenly and firmly fastened down, and they should be long enough to project a few inches beyond the faces of the arch. The spiral joints must then be marked upon the laggings to guide the masons in setting the voussoirs. For this purpose a long, flexible straight-edge must be procured. This straight-edge is usually a ½-in. deal board, about 12 in. broad and 25 ft. long, having one or both of its edges perfectly straight. It should be sufficiently long to reach from the impost to the crown, that is, it should be equal in length to half the heading spiral. The lines for the face, which are perfectly straight on the plan, should be first drawn on the laggings; these are the lines A B, C D, Fig. 5976. Then bisect each face, and draw the line *m n* through the points of bisection, and divide this line similarly to the impost; in other words, divide it into parts corresponding to the checks upon the impost, α, β, γ, &c. Having divided the straight-edge into the number of voussoirs in the half arch, which will be half the number in the whole arch with half the keystone, if there is one, apply it from the first check on the impost to the corresponding division on the crown, and draw a line on the lagging. Upon this line, while the straight-edge is in the same position, mark with a point the divisions of the voussoirs. Draw all the spirals from the impost to the crown in this way, and mark the divisions of the voussoirs again upon the heading spiral next to the opposite face. The lines thus drawn are the heading spirals. To draw the coursing spirals, begin at the obtuse quoin, and with a straight-edge draw a line on the laggings from the bottom of the first skewback on the impost to the first division on the heading spiral representing the coursing joint. Repeat this operation for all the divisions, and the whole of the coursing-joint spirals will be thus obtained. In the case of an arch built wholly of stone, these lines coincide with the bed-joints of the voussoirs; but when the arch is built wholly or partially of brick, they are the lines to which the courses of bricks must be parallel. When the imposts and the quoins forming the ringstones and head of the arch are of stone, and the intermediate parts of the courses are of brick, the thickness of the courses will be dependent on the thickness at the abutment, say three or four courses of brick to each stone springer. To give the soffit of the arch a good appearance, the brickwork should have a regular half-brick bond throughout. The accuracy of the brickwork requires to be frequently tested during the execution of the work.

We shall now give an example of the application of the preceding processes and formulæ; and shall take, for purposes of illustration, a bridge designed by G. G. André to carry a railway over a street 30 ft. broad, with a footway 15 ft. broad on each side, the angle of obliquity being 50°, Fig. 5991.

5991.

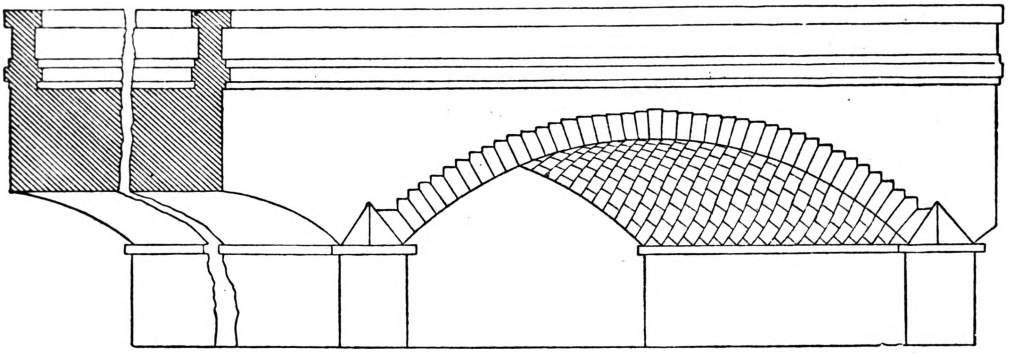

We have in this case;—Direct span = 30 ft., and angle of obliquity = 50°. The oblique span is thus c cosec. $\theta = 30 \times 1{\cdot}3054073 = 39{\cdot}16$ ft. The rise of the arch is 8 ft. Hence the radius $= \frac{8^2 + 15^2}{8 \times 2} = \frac{289}{16} = 18{\cdot}06$ ft. The thickness of the arch is 2 ft., and the external width is 24 ft. We have now to find the length of the arc a. Dividing the half chord by the radius, we have $\frac{15}{18{\cdot}06} = {\cdot}8305642$ = sine of half the arc = 56° 9′ 24″. Therefore the whole arc is 56° 9′ 24″ × 2 = 112° 18′ 48″, the length of which to radius unity, as found by the tables, is 1·960, and $1{\cdot}960 \times 18{\cdot}06 = 35{\cdot}39$ ft. The tangent of the angle of the skewback of the intrados $= \frac{c \cot. \theta}{a} = \frac{30 \times {\cdot}8390996}{35{\cdot}39} = {\cdot}711302 = 35° 25′ 33″ = \beta$. Hence the length of the heading spiral is a sec. $\beta = 35{\cdot}39 \times 1{\cdot}2271948 = 43{\cdot}43$ ft. A convenient number of voussoirs will be 41. Therefore the thickness of the courses will be $\frac{43{\cdot}43}{41} = 1{\cdot}06$ ft. The length of the impost is $b \times$ cosec. $\theta = 24 \times 1{\cdot}3054073 = 31{\cdot}33$ ft.; and the divergence of the courses is impost × sin. $\beta = 31{\cdot}33 \times {\cdot}5796485 = 18{\cdot}159$ ft. This length corresponds to the thickness of seventeen courses, which will be the number intersecting the springing.

The distance C O below the axis of the cylinder, calculated by Buck's formula, would be $\frac{c \cot.^2\theta}{a}(r \times e) = \frac{30 \times ({\cdot}8390996)^2}{35{\cdot}39} \times (18{\cdot}06 + 2) = 12$ ft.

The tangent of the angle of the extrados may be found from the tangent of the intrados by proportion; thus, $\frac{r+e}{r}$ tan. β = tan. $\phi = \frac{18{\cdot}06 + 2}{18{\cdot}06} \times 711302 = {\cdot}7950000$ = tan. 38° 29′ 6″. The difference of the angles (38° 29′ 6″) − (35° 25′ 33″) = 3° 3′ 27″ = δ, the angle of the twist.

The twisting rules for working the winding beds of the voussoirs must be equal in length to the depth of the latter; therefore in this case they will be 2 ft. long. The distance apart at which they are applied on the extrados is 2 ft. 6 in. = 30 in. The additional breadth to be given to one end of the twisting rule will thus be d sin. $\delta = 30 \times \cdot0533380 = 1\cdot6$ in. Hence, if the narrow end be 3 in., the broad end must be 4·6 in. The distance apart at one end being 30 in., the distance at the other will be $d' = d\,\frac{\text{sec. }\beta}{\text{sec. }\phi} = \frac{30 \times 1\cdot2271948}{1\cdot2775126} = 28\cdot8$ in.

The triangular templates for marking the checks on the springing stones will be obtained by making the base = 1·06 ft., and the hypothenuse = the length of the check on impost.

OPTICAL INSTRUMENTS. Fr., *Instruments d'optiques*; Ger., *Optische Instrumente*, Ital., *Strumenti ottici*; Span., *Instrumentos ópticos.*

See Surveying Instruments.

ORDNANCE. Fr., *Pièces d'artillerie*; Ger., *Artillerie, or Geschützkunst*; Ital., *Artiglieria*; Span., *Artilleria.*

Ordnance is a term synonymous with artillery, and includes all heavy weapons of warfare.

See Artillery. Gun Machinery. Gunnery.

ORES, Machines and Processes employed to Dress. Fr., *Préparation mécanique des minérais*; Ger., *Mechanische Aufbereitung der Erze*; Ital., *Macchine e procedimenti per lavorare il minerale*; Span., *Maquinaria y procedimiento empleados para preparar minerales.*

In the preparation of certain metallic ores for smelting purposes it is often expedient to use machines which are specially adapted to economize labour and to obtain the largest possible yield of the particular metal or metals sought, by separation from the extraneous minerals such metal may be associated with.

The following description of dressing tin and copper ores in Cornwall, read by James Henderson, before the Institute of Civil Engineers, in 1858, gives an excellent idea of the general nature of the machinery and processes employed to dress ores;—

Tin Dressing.—The stones of tin ore, on coming from the mine, are ragged and spalled, or broken to a size not exceeding that of a man's fist. After undergoing this process, the agent, or head dresser, in order to form some idea of its quality, proceeds, in all probability, to van a small portion. This consists in bruising some of the ore, on a shovel, to a very fine powder, when, by immersing the shovel in water, from time to time, in a horizontal position, and giving it subsequently an undulating and circular motion, the light earthy and stony particles are gradually carried over the edge, leaving the tin and other minerals to settle on the shovel, according to their specific gravity.

It may be remarked that the tin in the stone, unlike the ores of copper, requires an experienced eye to detect its presence. The ore of tin, which in Cornwall is almost invariably the peroxide, has a specific gravity of about 6·50. The minerals usually associated in the stone with the tin are iron pyrites, or mundic, which is frequently arsenical, possessing a specific gravity of 4·90, copper pyrites, or yellow ore, having a specific gravity of 4·25; and the inveterate foe of the tin dresser, wolfram, or tungstate of iron and manganese, having a specific gravity of nearly 7·00. Thus it will be seen that the tin ore, if in sufficient quantity, will, by the process of vanning, be separated readily from the yellow ore and mundic, whilst the wolfram will remain. Hence the dislike which the tin dresser has to that mineral; for with every care in the numerous manipulations to which the ore is subjected, the wolfram will cling to the tin, resisting even the roasting operations to which the greater part of the tin ore in Cornwall is submitted, before it is considered fit for the smelting house.

After being spalled the ore is either measured, or weighed, according to the usage of different mines, and about a barrowful is broken with flat-headed hammers, on an iron plate, to the size of gravel, when, according as to whether weight or measure is to be applied, a quarter noggin, or an ounce weight, is bruised down and vanned, to ascertain the value of the whole. If the tin is associated with copper, or iron pyrites, the ore is roasted on the vanning shovel, or in a crucible, and the sulphur and arsenic in the pyrites being thereby sublimed, the copper on the van being again washed, is carried over the edge of the shovel; the remainder of the iron in the pyrites being now freed from its impurities, is readily removed by the application of a magnet to the dried ore. Pure black tin, or peroxide, is now all that remains.

When the spalling process has been completed, the stones of ore are taken in carts, or conveyed by tram-wagons, to the back of the pass, behind the stamping mill.

5992.

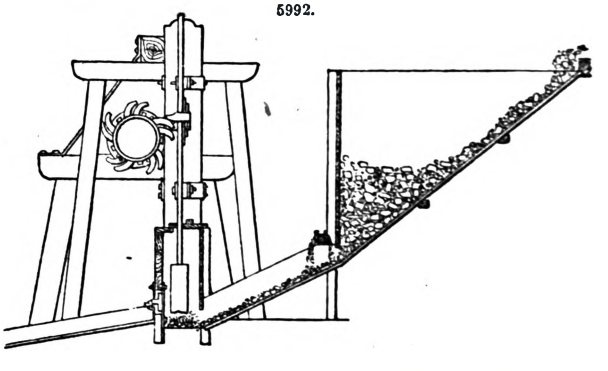

The stamps, Fig. 5992, consist of a number of heavy rectangular blocks, of cast iron, weighing from 1½ to 5 cwt. each, called stamp-heads, which are alternately lifted by cams, or wipers, fixed at regular intervals on a horizontal axle, placed in front of or behind the lifters to which the stamp-heads are attached. There are generally four stamps in a set, and the number of sets varies according to the requirements of the mine, or to the power employed. The height to which the stamp-heads are raised, by the tongue attached to the lifters, is usually about 10 in., and the speed sixty blows

a minute. These, then, fall with repeated blows on the tin ore, which, having passed gradually from behind, down an inclined plane, underneath the stamp-heads, by its own gravity, aided by a stream of water and the constant vibration of the machinery, soon becomes completely pulverized, and at each blow of the stamp-heads flashes up in a liquid state, through four perforated plates, technically called grates, two of which are fixed in the front and one at each end of the wooden chest in the stamps work. The holes in these perforated plates vary in size from the diameter of a small needle, to that of a pin's head; and much judgment is required in the selection of the grate best adapted to the quality of tin stuff to be dressed. They are usually made of pieces of thin sheet iron, about 9 in. square, the holes are punched on the convex side, and the concave side is turned towards the stamps. When in constant work the grates generally last about a fortnight; but sometimes, when they become corroded by acid in the water, which in some mines is frequently the case, they will only last twenty-four hours, and under such circumstances copper grates are employed. In some instances the grates are entirely dispensed with, and the pulverized mineral is projected over a small wooden shutter, fixed in lieu of a grate. This shutter is raised or lowered in the grate-holes, according as the tin ore is required in a fine or a rough state.

The tin ore after being stamped, and having passed through the grates, in the form of fine sand and water, is conveyed down a short incline, about 12 ft. long, into long wooden troughs, called strips, which are wooden troughs from 35 ft. to 40 ft. in length, 18 in. wide, and 15 in. deep, with a fall of about 1 ft. in the total length. There are usually three strips to each set of four stamps. In these the tin ore is deposited, according to its specific gravity; the best, or heaviest, tin being left at the head, whilst the finer and lighter portion is carried towards the tail. The strips are open at the lower end, but as they become gradually filled by the deposit of tin ore, slips of wood, about 1 in. in depth and thickness, are slid down horizontally at the tail end of the strips, in a groove at each side. Figs. 5993, 5994, show an elevation of the end, and a plan of the lower portion of the

5993.

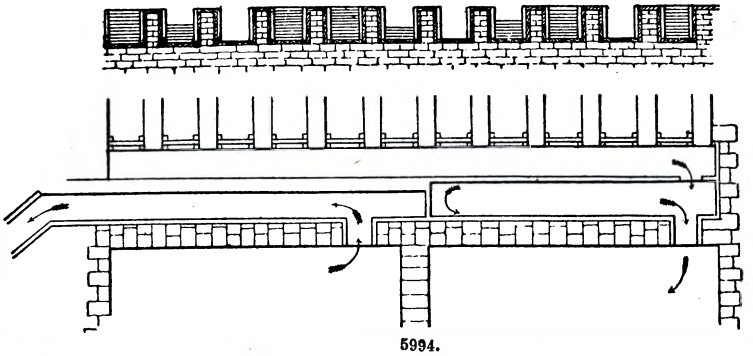

5994.

strips, some being represented full, others partially, and some entirely empty. When the strips are full, the contents are divided into three portions, the head, the middle, and the tail, according to the quality of the ore. The slime forming a fourth portion of the tin stuff passes into another pit. The head, or crop, which occupies about 14 ft. of the strips, is wheeled in barrows to square, or more correctly speaking, rectangular buddles: the heads of two strips being generally supplied to each buddle.

Buddling.—The old-fashioned form of buddle, which is still frequently used, consisted of a wooden box about 8 ft. in length, 3 ft. wide, and from 2 ft. to 2 ft. 6 in. deep, sunk in the ground, and having an inclination of about 2 ft. in its whole length. Fixed across the upper end, and above the edges of the buddle, is a board, about 15 in. wide, called the jagging board, or buddle-head, rather more inclined than the buddle itself, on which a small stream of water is made to run, at the will of the buddler, spreading itself thinly over the whole length of the board. The buddler, a man or a boy, standing in the buddle, places on the jagging board a small quantity of the ore, marking it into furrows, or jagging it with the edge of his shovel; and the water above referred to carries it away, gently, into the buddle beneath, where it spreads itself over the bottom of the buddle, assisted by the operator by means of his shovel and his feet, which are shod with a wooden-soled shoe, termed a brogue. In the buddle, Figs. 5995, 5996, the buddler does not jag the ore on the buddle-head, as previously described; but the tin stuff, after being stirred up by an assistant, passes through the perforated plate, Fig. 5996, in a liquid state, and is diffused over it by means of numerous strips of wood, or guides, and falling into the buddle, is carefully and continually swept with a brush or broom, by the buddler, who stands on a board placed across the buddle. This brushing, like the use of the shovel and brogue, tends to spread the tin ore evenly over the bottom of the buddle. At the lower end, or tail-board, is a vertical row of holes, a few inches apart, through which the surplus water flows, and which are, one after the other, stopped up with plugs as the work rises. About 9 in. in length of water is kept between the work and the tail-board of the buddle, to prevent the escape of any of the ore through the holes. The object of buddling is to separate the rough matrix from the tin. Four and a half buddlefuls are generally finished by two operators in ten hours. The buddle, when filled, is divided perpendicularly into four parts, the head, the fore-middle head, the hind-middle head, and the tail. The head, which generally occupies about one-third of the length of the buddle, is then buddled again, and divided into four parts, which are named as before. The head of the second buddling is then tossed.

Tossing.—This process is carried on in the following manner;—A large circular tub, about

8 ft. 8 in. in diameter, termed a kieve, is nearly half filled with water. The ore to be tossed is placed gently down the side of the kieve into the water, which is constantly stirred with a shovel,

5995.

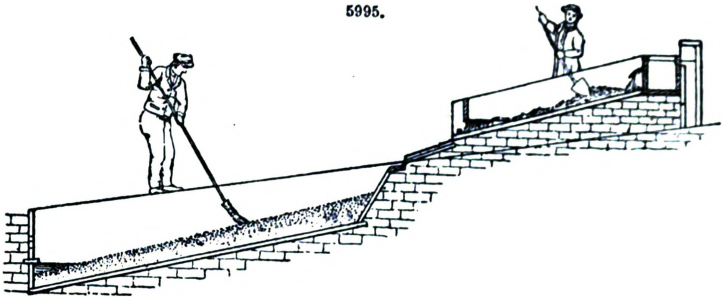

5996.

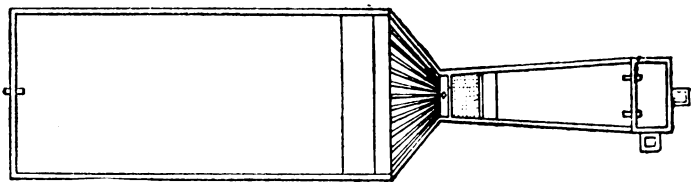

until the water rises, from the addition of the tin stuff, to within 2 in. of the top of the kieve. The tosser always stirs the ore in one direction, thus giving it a circular motion. As the object of buddling was to separate the rough poor matrix from the tin, so that of tossing is to get out the fine matrix. The kieve being now full, the operation of packing at once begins.

Packing is a very simple process, and merely consists in striking repeated blows on the edge of the kieve with an iron bar, one end of which rests on the ground. About a quarter of an hour is usually occupied in packing, although sometimes an hour may be requisite, according to the nature of the stuff, the fine tin stuff taking a longer time to pack than that of rougher quality. The vibration imparted by the process of packing to the contents of the kieve causes the subsidence of the tin stuff, according to its specific gravity, with greater regularity than it would have done had it been at once left at rest after tossing. In one or two of the Cornish mines, a wooden mall, or hammer, worked by machinery, attached to a water-wheel, is used for packing, and would appear to answer the purpose completely. When the process of packing is completed, which is ascertained by feeling the degree of hardness of the subsidized tin stuff with a shovel-hilt, the water is baled out into a second kieve, placed alongside, where tossing some fresh tin stuff is again carried on. The top part, which is light and inferior, and is called skimpings, is removed with a shovel, to the depth of ¼ in. or ½ in., and is buddled again twice over, and divided into three parts as before; or, according to the nature of the ore, perhaps taken to the frames. The bottom part, termed whits, is then fit for burning in the oven.

The fore and hind middle-heads of the first buddling are now buddled over again, separately from each other, but with the addition of stuff of a similar quality from the other buddles. The tails from the buddles are thrown into a launder, or wooden trough of running water, and are carried by it to the separator, a machine having for its object the separation of the slime tin which the buddle would not retain. The simple test, by vanning the quality of the ore, is applied from time to time, during the dressing operations, and thereby the proportion of heads and tails, and other divisions of the work, according to its richness, are ascertained.

The portion of the tin ore from the stamps, termed the middle of the strips, occupying generally about 18 ft. or 20 ft. of the strips, is thrown into launders of running water, and conveyed by the stream into circular buddles.

Circular Buddles.—The circular buddle, Fig. 5997, is a pit about 18 ft. in diameter, and about

5997.

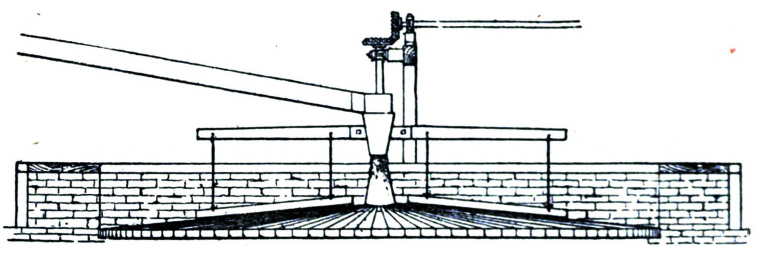

2 ft. deep at its circumference; the bottom, which is boarded, rising towards the centre about 1 ft. In the centre is fixed a cast-iron cone, down the sides of which the triturated ore, in a very fluid state, flows from the launder, or wooden shoot, before described, and spreads itself over the bottom

of the buddle. Two wooden arms are, in the meantime, slowly turned by the toothed wheels, and trailing after them a light board, attached to each, spread evenly the ore over the floor of the buddle, which takes about five hours to fill. One circular buddle contains, when full, the middles of about ten strips. When filled, the contents of the circular buddle, which reach to the top of the cone, are divided, perpendicularly, into two parts, the head and the tail, the division being, generally, about half-way in the buddle. Whilst in operation, a breadth of 9 in. of water is kept between the work and the circumference of the buddle, for a similar reason to that described in the operation of the square buddle. The head is thrown into a launder of running water as before, and is conveyed into a second circular buddle, where it undergoes a similar process to that in the first. The tail is sent down another launder to the separator.

The contents of the second circular buddle are divided into three parts, the head, the middle, and the tail. The head occupies 3 ft., the middle 1 ft. 6 in., and the tail the remainder. The head and middle-head of this buddle are wheeled in barrows to a square one, and buddled separately; whilst the tail, like that of the first, is conveyed, by a stream of water, to the separator. The head of the square buddle is tossed and packed, and divided as before, when it becomes fit for the burning house, or oven. The middle head from the square buddle is again buddled, as many times as may be necessary; the tail of each operation passing to the separator.

The tail of the strips is thrown into a launder of water, into which the surplus water from the stamps, after passing through the strips, flows, mixed with the light particles, or slimes. It then passes, rapidly, into a small pit, or cover, where some portion of tin is deposited, to be afterwards submitted to the separator. From this cover the water and slimes flow into slime-pits, about 15 ft. long by 12 ft. wide, Fig. 5994. The course that the water, holding the fine ore in suspension, is made to take, is shown by the arrows. As soon as the first pit is full, the slimes pass over into the next pit. The contents of the first pit will, of course, be of better quality than those of the second; whilst the overflow from the second is almost worthless, but it is nevertheless used for supplying the frames, so that no particle of tin may be lost. The two slime-pits are filled in about twenty-four hours.

The Separator, Figs. 5997A, 5997B.—This machine consists of a wooden box, or cistern, into which

5997A.

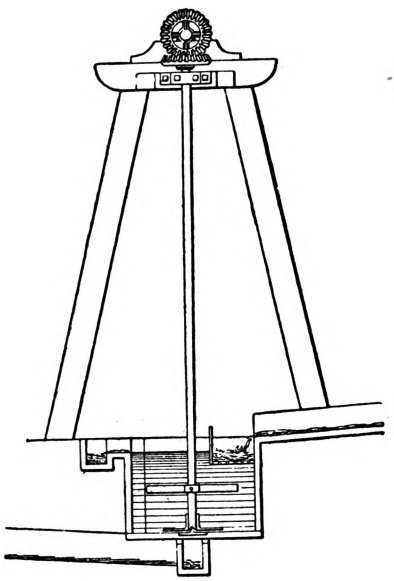

5997B.

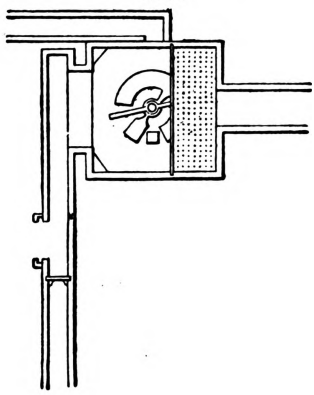

the tin stuff to be separated flows. It has an aperture at the bottom, about 1 in. in diameter, which, by means of an iron disc, or plate, is alternately closed and opened, as the shaft to which the plate is attached revolves. To this shaft is also fixed an iron paddle, which, turning round, keeps the ore suspended in the water in constant agitation. Thus the tails from the different buddles, as well as the contents of the cover at the end of the strips, flow with rapidity into the separator. The rougher and heavier portion passes through the hole at the bottom of the cistern, down a long strip, where it is continually stirred to cause it to be evenly deposited, and also to assist in carrying off the lighter particles. The overflow containing the fine tin, which may be almost considered to float on the water, passes into two catch-pits. The rough part of the contents of the first pit is buddled as many times as may be necessary, whilst the finer portion, with the whole of the contents of the second pit, is wheeled to the frames. When the strip into which the rough portion, termed rows, falls from the separator is full, which is in about four days' time, it is cleaned out, and the contents thrown into a launder of running water, which carries it to another long strip. This, when filled, is divided into two portions, the head and the tail. The head is taken to the stamps, and again stamped with rough tin stuff. The tail is again stripped in the same strip, until it is clean enough for the stamps. The overflowing turbid water is thrown away. The tin in this strip generally averages as much as 3 per cent., so difficult is it, after all the processes to which the ore has been subjected, to extract the whole of the tin it contains.

J. B. Wilkins' separator, Figs. 5998 to 6000, is used for the same purpose as the one already described. A stream of pure water is conveyed by a pipe, or small launder, into a small cistern, into which the tin stuff flows, and being admitted close to the bottom of the cistern, boils up through the tin stuff. This not only keeps it in a state of agitation, but prevents all but the rougher and heavier particles passing through the orifice at the bottom, the lighter portions flowing over into two catch-pits, as in the former description of separator. Previous to the operation of framing, to which allusion has been made, the contents of the slime-pits, Fig. 5994, are thrown into a launder of water, and conveyed into a cistern, or cover, at the head of some long and narrow pits called trunks. In this cover the operation of trunking is carried on. This consists in the agitation of the contents of the cover, or slimes, by means of wooden paddles attached to an arm, which, by means of a lever, acted on by a lifter on the axle of a water-wheel, makes a quarter revolution at intervals, thereby moving the paddle to and fro, and causing the slimes which continually supply the cover to flash over into the trunks below them. At the end of each trunk there are holes as in the square buddles, which are gradually plugged up as the stuff rises, permitting the egress of the surplus water into a leat, or water-course. This being considered valueless, is allowed to flow.

5998.

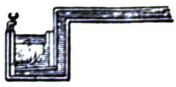

5999

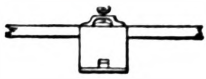

6000.

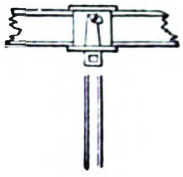

A trunking machine is shown in Figs. 6001, 6002. When the trunks are full, which generally occupies thirty-six hours, their contents are wheeled to a stréke, or inclined wooden box, precisely similar to the one at the head of the square buddle, Figs. 5995, 5996. Here, as in the

6001.

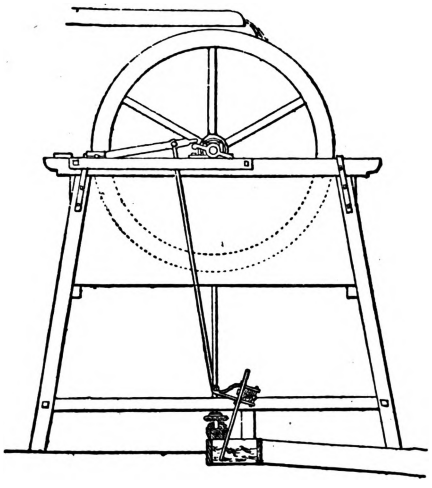

6002.

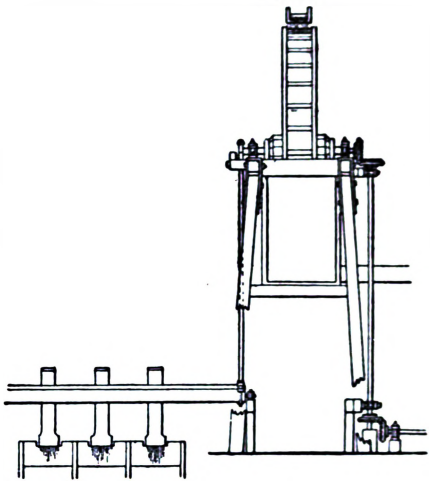

buddling operation, a stream of water is admitted; only, in this instance the water supplied flows from the head of the slime-pits, and the stuff, after being stirred with a shovel, is carried by the stream to the frames.

There are two descriptions of frame, one worked by machinery, the other by hand, but both are on the same principle. The machine-frame, Figs. 6003 to 6005, consists of an inclined table, about 8 ft. long and 5 ft. wide, with sides about 5 in. high. At both ends of the frame are fixed two round projecting irons, by which it hangs upon two upright pieces of timber, so that the frame may be turned perpendicularly, as in the hand-frame, Fig. 6006. As the table is inclined, it is necessary that the upright posts on which it turns should be fixed on each side of the centre of the frame, so that when in a perpendicular position the top side may be level. At the head of the frame is a board, Fig. 6004, on which a number of small diamond-shaped pieces of wood are fixed. These spread the liquid tin stuff over the whole width of the frame. After leaving the frame-head, the tin stuff falls on a sloping board, which can be turned up by means of a leather hinge at each end, when the frame assumes an upright position. At one side of the tail end of the frame, and attached to it, is a box, into which most of the water, after depositing its tin, flows. The mode of operation with the machine-frame is as follows;—The liquid tin stuff is admitted on to the frame-head in a small stream, and flowing on to the table in a thin film, over its whole length and breadth, deposits its tin according to its specific gravity, the heaviest, or best quality, being near the head, the second occupying the middle, and the worst the tail end of the frame. The water-wheel turns, with a very slow motion, a horizontal arm, or axle, on which are fixed, at the requisite distances, several tongues, intended, as the axle revolves, to disengage at the proper moment some part of the machinery immediately connected with the frame. Thus, the first tongue presses against the wooden rod running by the side of the frame, Fig. 6005, and stops the flow of the tin stuff. The next tongue then disengages a catch beneath the box containing the water, which has been running into it from the frame, and the table, or frame, at once turns, as shown by the dotted lines, Fig. 6003, striking against a catch, which frees the launder containing pure water, above the frame, and

which falling over, empties itself to the frame, washing the tin that is on it into two covers underneath. The table, or frame, then resumes its original position, the tin stuff is again admitted, the

6003.

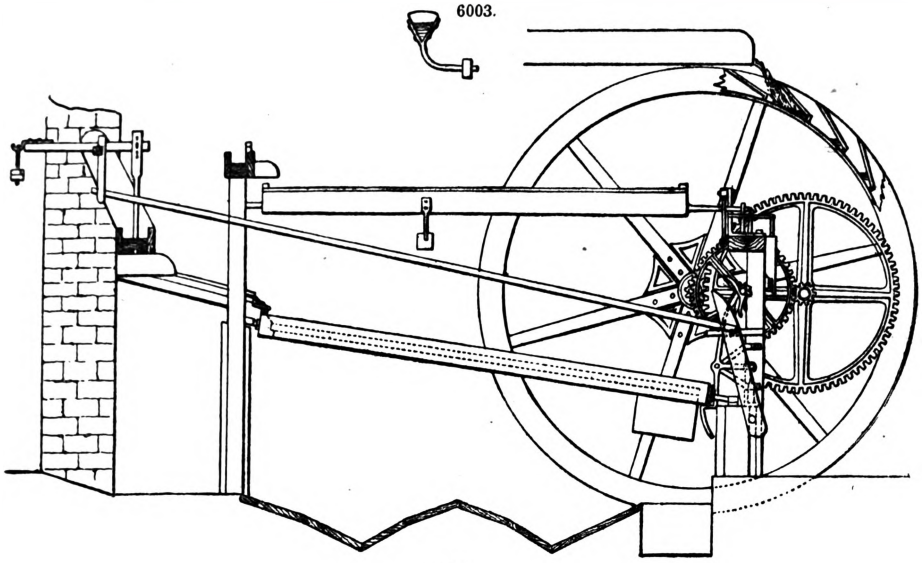

6004.

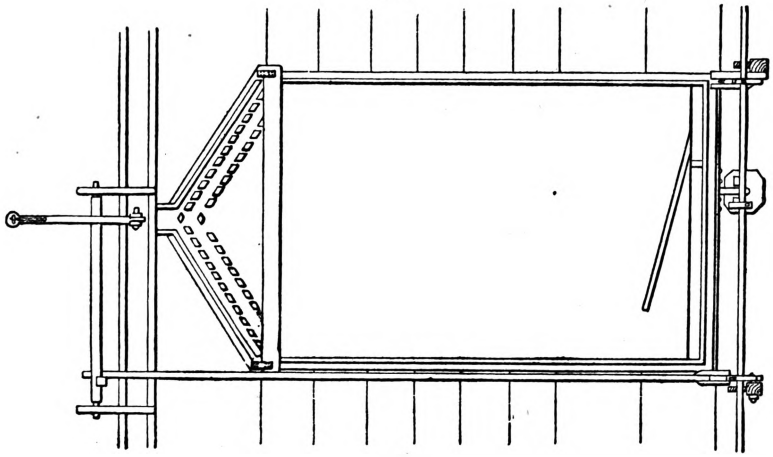

water again flows into the balance-box at the corner, and the table is again turned as before. The tin stuff from the two covers underneath the machine-frames flows into separate pits, each 12 ft. long, 5 ft. wide, and 1 ft. 3 in. deep; the cover near the head of the frame of course supplying the best quality. The refuse flowing off the ends of the frames, and from the balance-boxes, is thrown away. The contents of the head cover are now sent to the hand-frames; the stuff from the second cover being returned again to the machine-frames, and framed again.

6005.

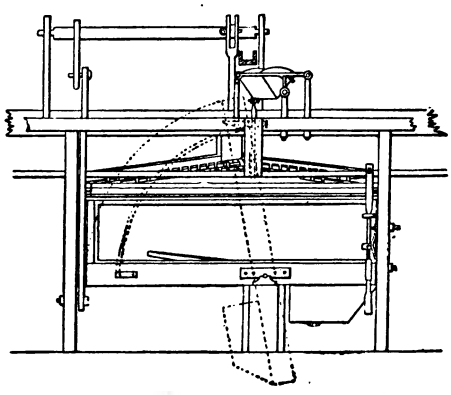

The Hand-frame, Figs. 6006, 6007, is on the same principle as the machine-frame, but it is worked by hand. The attendant on the frame has a wooden toothless rake, with which the tin stuff at the frame-head is jagged, and spread evenly over the frame. It will be observed that there is no balance-box in the hand-frame, but when it is desired to turn the frame the edge is pressed with the foot or the rake. The attendant then turns over the launder of water above, washing the tin stuff into two covers, as previously described in connection with the machine-frames. At the tail end of the frame an opening is left the whole width of the frame, to allow the refuse to run off, Fig. 6007; but as this perhaps contains some little tin it is preserved. The contents of the two covers flow into two pits, each 9 ft. long by 3 ft. wide. The tin stuff from the best cover, or pit, is

taken out, tossed, packed, and carried to the burning house. That from the second pit is framed again in the hand-frames. The catchers containing the refuse are connected with a slime-pit, into which the latter flows, where it undergoes the operation of trunking.

These operations are often varied in different mines, according to the nature of the ore; but the principle is everywhere the same, being the separation, by specific gravity, of the peroxide of tin from its matrix in the lode.

Most of the tin ores in Cornwall have to be roasted, or calcined, before they are fit for the smelting

6007.

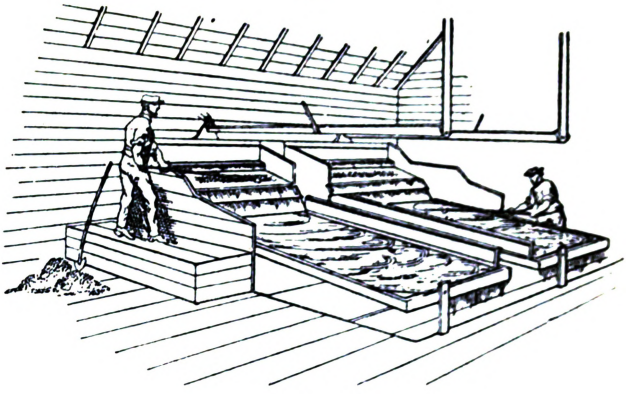

6006.

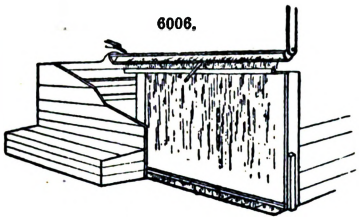

6008.

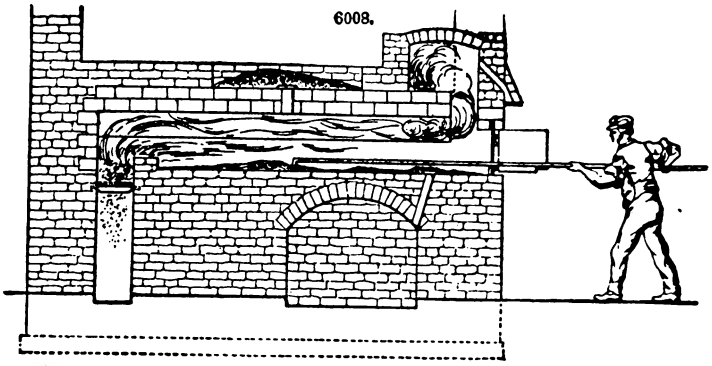

6009.

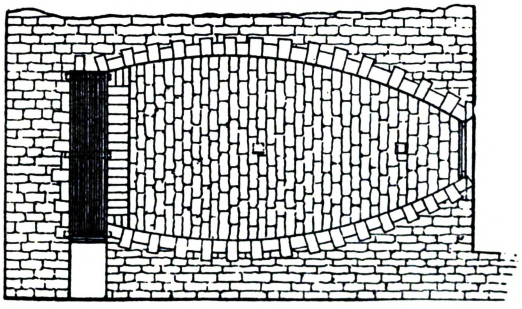

6012. 6010.

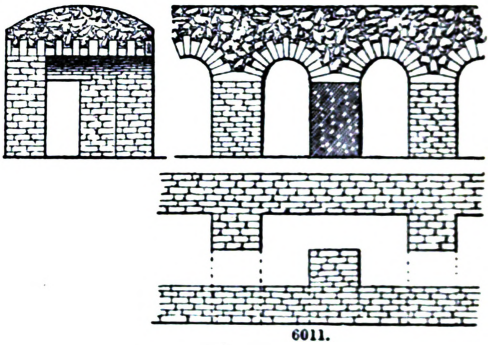

6011.

Arsenic Flues.

house, although in some mines the admixture with other minerals is so trifling that this operation is considered unnecessary. The furnace, Figs. 6008 to 6012, in which the roasting is carried on, is about 10 ft. long, 5 ft. 6 in. wide in the middle, and 3 ft. wide near the mouth, Fig. 6009. The fire-place, it will be observed, is situated at the back, the flames playing through the oven, and ascending the chimney, which is above the furnace-door. The ore, before it is submitted to the action of the fire, is thoroughly dried, in a circular pit, placed immediately above the oven, into which it is let down through the opening, when it is considered to be ready for calcining. Beneath the oven, and connected with it by an opening, through which the ore, when sufficiently roasted, is made to pass, is an arched opening, about 4 ft. wide, termed the wrinkle. Here the ore is collected whilst another charge is being placed in the furnace. About 7 cwt. or 8 cwt. of ore is the quantity usually roasted at one time. Whilst undergoing this operation, dense fumes of arsenic and sulphur escape with the smoke from the fire, and pass through large flues, divided into several chambers. Figs. 6010 to 6012, where the former is collected. The flue is often 70 yds. long, and the greatest deposit of arsenic takes place at about 15 yds. from the oven, or furnace. Instead of being at once completely roasted, the whits from the stamps are sometimes first rag, or partially burnt for about

six or eight hours. The object of this partial burning is to save time and expense, nearly three-fourths of it being thrown away, after dressing it from the first burning.

Brunton's calciner, Fig. 6013, for calcining tin ore, is used in Cornwall. It consists of a revolving circular table, usually 8 ft. or 10 ft. in diameter, turned by a water-wheel, which receives through the hopper the tin stuff to be roasted, or calcined. The frame of the table is made of cast iron, with bands or rings of wrought iron, on which rest the fire-bricks composing the surface of the table. The flames from each of the two fire-places pass over the ore as it lies on the table, which slowly revolves, at the rate of about once in every quarter of an hour. In the top of the dome, over the table, are fixed three cast-iron frames, called the spider, from which depend numerous iron coulters, or teeth, which stir up the tin stuff, as it is carried round under them. The coulters on one of the arms of the spider are fixed obliquely, so as to turn the ore downwards from one to the other—the last one at the circumference of the table, projecting the ore, by this time fully calcined, over the edge, into one of the two wrinkles beneath. A simple apparatus called the butterfly, moved by a handle outside the building, diverts the stream of roasted tin stuff, as it falls from the table, either into one or the other, as may be required.

6013

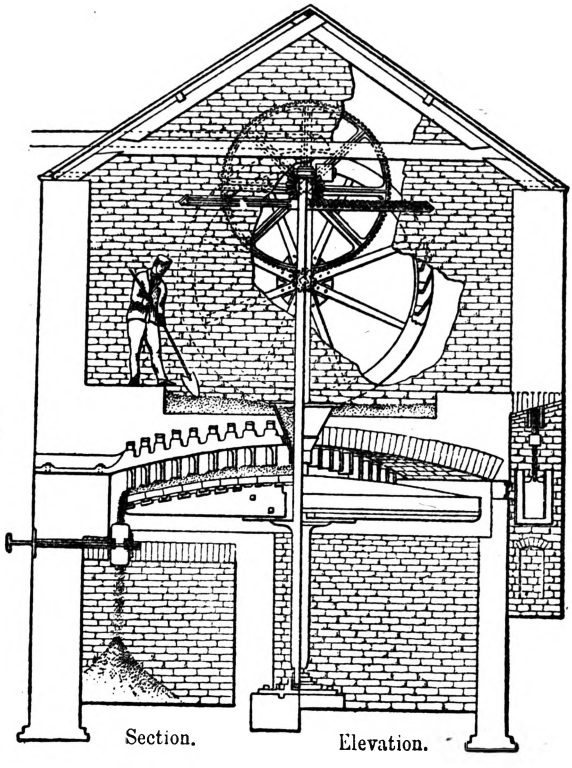

Section. Elevation.

As soon as the roasted ore is removed from the wrinkle, it is cooled by wetting it with water. It is then buddled twice over, and the head tossed and packed. The other two middle heads are buddled separately, as many times as may be necessary, and tossed and packed as before. The tail is shaked, or washed, in a washing trunk, or tye, Figs. 6013A, 6013B, which is a long, narrow box, similar in appearance to a strip. The ore being placed near the head, and a stream of water admitted, is washed into the tye; it is violently agitated with a short broom, held in both hands. The stuff from the covers of the washing trunk is again passed through the stamps; whilst the light particles are again buddled, or framed, as many times as may be necessary. The bottom of the kieve, after tossing, is taken to the burning house again, and roasted for six or twelve hours. It is then buddled again twice, and the head tossed or chimmed as often as may be considered necessary to clean it. Chimming differs only from tossing in placing the kieve, in which the operation is carried on, on its edge, or chime. A livelier motion is thereby acquired, when the kieve is struck in packing, and by this means more of the stubborn concomitants are removed than would be the case in tossing when the kieve stands on its base. The skimpings, or top of the contents of the kieve after the first tossing, are buddled twice with a very gentle stream of water, and as the tin is fine, are afterwards tossed instead of chimmed; the latter operation being reserved for the tin of rougher quality. The tin stuff from the second tossing is burnt again and buddled as before; then chimmed and tossed, and at last becomes fit for the smelting house. In this condition it is sold to the smelters as black tin. The tails of the buddle from the second burning are taken to the shaking trunk, then tyed and dillued.

6013A.

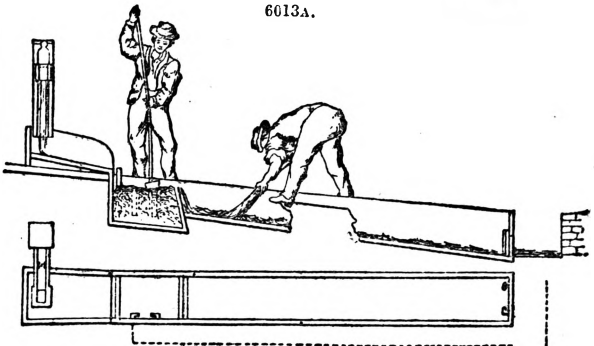

6013B.

Dilluing.—This operation consists in placing in a close hair-bottomed sieve, without handles, some of the ore. The operator then immerses the sieve containing the ore in a kieve of water, and moving it round and from side to side, until the light particles are suspended in the water, dexterously inclines the sieve to one side, permitting the light portions to escape, when they subside at the bottom of the kieve. They are termed dilluing smalls, and are subsequently buddled as often as may be requisite. The remainder passes again through the stamps, mixed with fresh ore, again to undergo the processes we have described.

Dressing Copper Ore.—The ore, when brought to the surface, is usually conveyed from the mouth of the shaft in iron tram-wagons to the slides.

After the ore is thrown from the wagon into the slides, the larger stones are ragged, or broken into smaller pieces, with sledges of about 12 lbs. These are again reduced in size with hammers weighing about 3 lbs. The smaller-sized ore in the slides is riddled, either in a common sieve, or by means of a revolving griddle, Fig. 6014, the ore being thrown

6014.

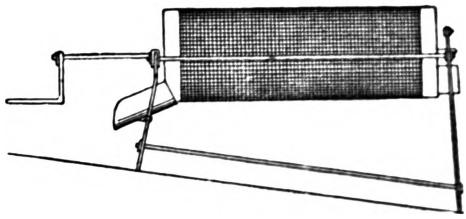

6015.

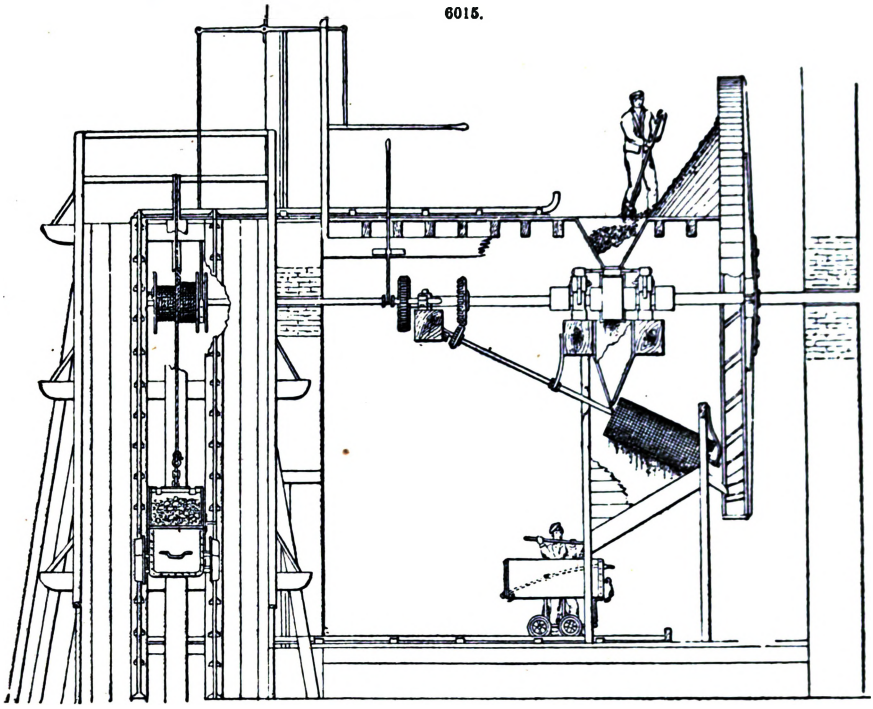

6016.

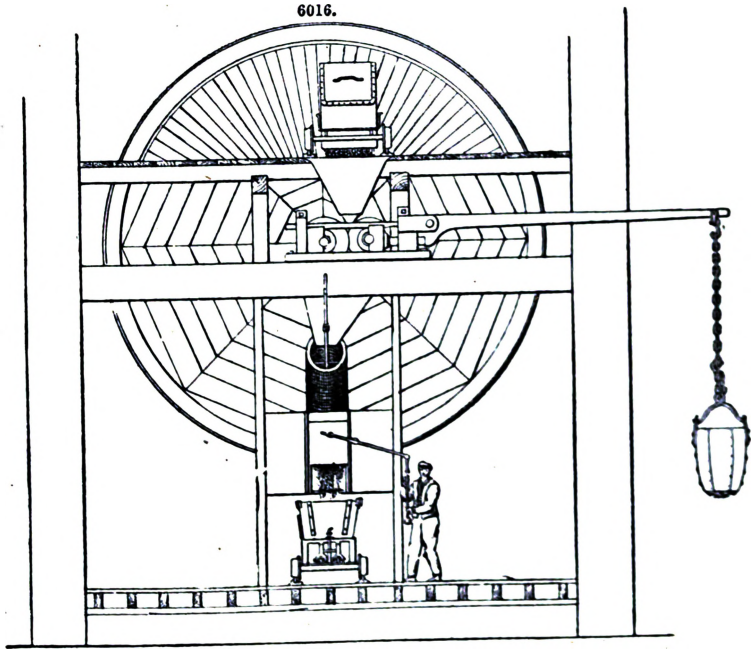

into the higher end whilst the griddle is turned round by the handle. The meshes of the sieve, or griddle, vary from ¾ in. to 1 in. square, according to the quality of the ore. The whole is now divided into three portions—Prills, or pieces of pure ore; dradge, or second quality ore, where the metal is disseminated through the stone; halvans, or leavings. The prills are fractured in the crusher, Figs. 6015, 6016, which consists of the rolls, two cast-iron cylinders, about 2 ft. in diameter and 10 in. in width, placed almost touching, and which are made to revolve in opposite directions, the necessary motion being given either by a steam-engine or by a water-wheel. In Figs. 6015, 6016, which represent the original machine at the North Wheal Bassett Mine, the wagon containing the ore to be crushed is shown being drawn up an inclined plane. When it reaches the upper floor, the hauling machinery is thrown out of gear, and the wagon is emptied into the hopper immediately over the rolls. The empty wagon is then permitted to descend the incline by its own gravity, checked, if necessary, by the brake-handle.

The ore, after passing between the rolls, one of which works horizontally on a side, and is kept close up to the other by means of two levers, with heavy weights attached to each, falls in a crushed state into the revolving griddle. The finer particles pass through into the wagon beneath, whilst any stones that will not go through the meshes of the griddle fall into the raff-wheel, which moves continually round, and conveys them to the upper floor, again to pass between the rolls. The crushed prills are then marketable, and are at once taken to pile, or to the heap of ore intended for sale. The dradge ore, or second quality, if containing much foreign mineral, must be cobbed and picked, or broken with a peculiar-shaped hammer. If tolerably free from iron pyrites, it is crushed, or bucked, and then jigged; an operation to which the smalls, after being griddled through a finer sieve than the one first employed, are also submitted, if not then found to be of sufficiently good quality to go to pile.

6017.

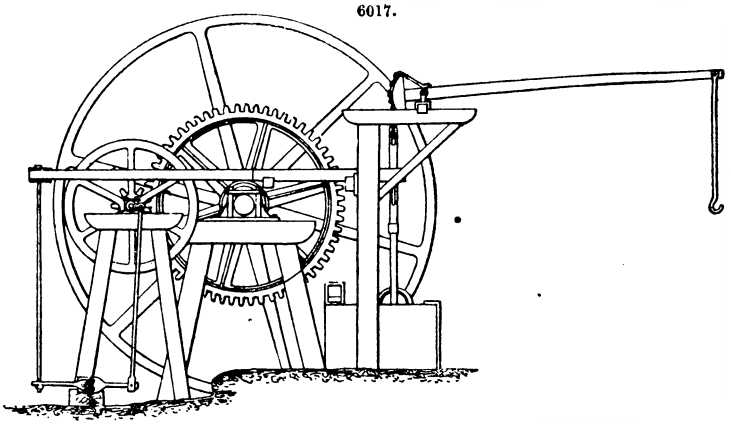

Jigging is an operation of importance in dressing copper ore. A sufficient quantity of the ore to be jigged is placed in a sieve, either copper-bottomed with fine holes, or in one having four or five holes to the square inch, a layer of iron pyrites having been previously thinly spread over the bottom. A peculiar vibratory motion is then given to the sieve, immersed in water. By this process the heaviest portion of the ore settles to the bottom of the sieve. That which passes through, and falls into the hutch, is usually fit for sale, as also the heavier part above referred to. It is now generally performed by machinery, and the sieve, which is usually of an oblong shape, is either moved by a brake-staff with the hand, or the same motion is given to it by a revolving axle worked by a steam-engine, as in Fig. 6017. Figs. 6018, 6019, represent a jigging machine, called Petherick's separator. The sieves containing the ores to be cleaned are placed in suitable apertures in the fixed cover of a vessel filled with water, connected with which is a plunger or piston, working loosely in a cylinder. The motion of the plunger causes the water to rise and fall alternately in the sieves, and effects the required separation, but in a more complete manner than can

6018.

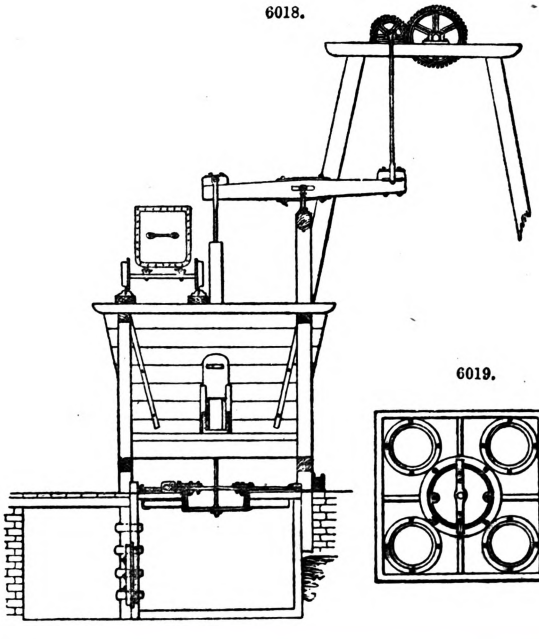

6019.

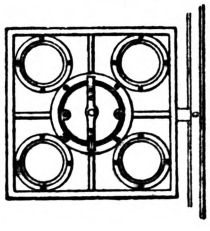

be performed by jigging. The variety in the extent and quickness of the motion required for the treatment of different descriptions of ores is easily produced by a simple arrangement of the machinery.

Dressing Lead Ores.—The following description of works erected and machinery employed by Thomas Sopwith, jun., at Linares, in Spain, shows a considerable advance upon the methods and machinery usually employed. The mine stuff, as extracted from lead mines, contains from 5 to 25 per cent. of galena. Pure galena, or sulphuret of lead, which is the ore of lead most commonly found, has a specific gravity of 7·75, and contains 86 per cent. of metallic lead. The lead ores of commerce are usually dressed to a tenor of from 74 per cent. to 78 per cent. If argentiferous, they are generally delivered with a lower percentage; because, on account of their greater value, it is not desirable to risk loss in successive processes of concentration; and because argentiferous ores are invariably more intimately associated with mineral impurities, difficult of separation, than ordinary lead ores. In England argentiferous ores are understood to be those which contain more than 12 oz. of silver in each ton of lead. The best and purest lead is, as a rule, obtained from the ores which contain least silver. No galena is found without more or less silver, and the richest in Great Britain is that of Cornwall, which contains commonly from 30 oz. to 40 oz. of silver to the ton. The separation of this silver from the lead does not come within the range of dressing operations, being effected by a subsequent process to that of smelting.

In dressing, all the applications of machinery act on the principle of separating, by means of their readier gravitation, the heavier particles of lead from the lighter ones with which they are associated. This is easy when the stuff treated consists of ore and fluor-spar, calc-spar, quartz, or any other impurity of much less specific gravity; but it becomes difficult when the ores are intimately blended with iron, copper, zinc, or other minerals having a specific gravity little inferior to that of galena; and still more so when such substances are also of marketable value, and where from the mine stuff several marketable products are to be obtained.

In his paper, Minutes Inst. C. E., vol. xxx., Sopwith made frequent allusion to the amount of work which can be passed through different apparatus. As this varies according to the nature of the stuff treated, and particularly as it is more or less rich, some standard, as representing ordinary average mine stuff, must be adopted. This Sopwith fixes at about 12 per cent. by weight of ore, of mine stuff, or of bouse treated, being equal to what in the north of England would be called worth 2½ bings a shift, a shift being eight wagons of a size in general use there, carrying of such work a load of about 1 ton each, and a bing being a measure weighing 8 cwt.

At the Linares Works about 350 tons of lead ore are produced monthly. There are two distinct dressing floors, the higher and the lower. On the higher floors, Figs. 6020, 6021, the mine stuff is first

6020.

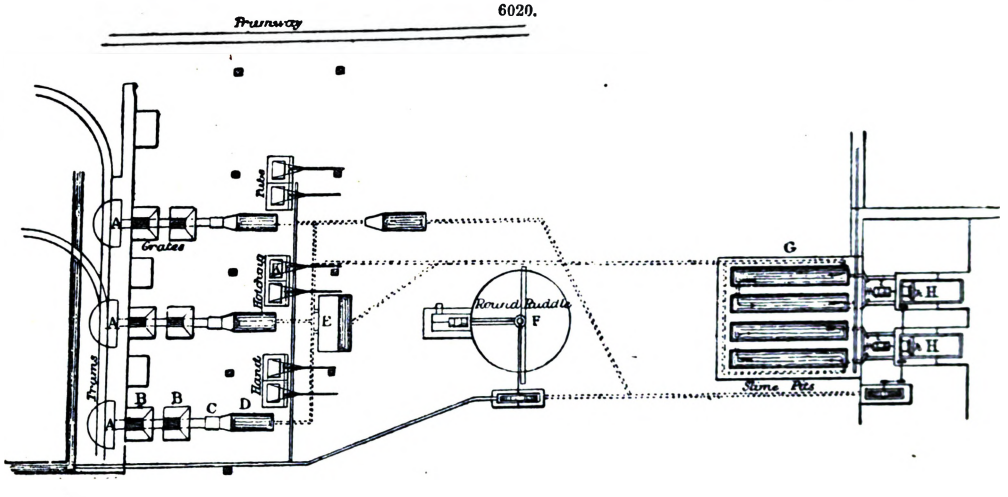

6021.

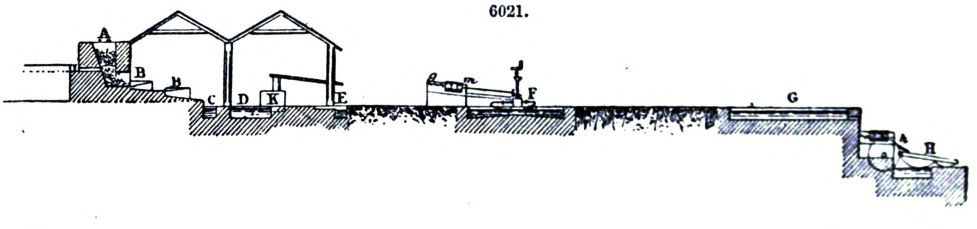

treated, and such separation as can be effected without the need of crushing is made: on these manual labour is principally employed. The stuff is separated into clean ore, waste, and a third class, where the ore and the waste are united in the same pieces, and which must be reduced to a smaller size, by means of crushing, or breaking, before they can be separated On the lower floors, Figs. 6022, 6023, is treated the stuff which passes through the crushing mill.

Figs. 6020, 6021, show, in plan and section, the arrangement of the higher floors, on which from 200 tons to 220 tons of lead ore are produced a month. The mine stuff drawn from the different

galleries of the mine is delivered into wagons at the shaft top, which convey it by a tramway to the teams A. By preference mine stuff of similar nature will be kept together in the same teams.

The washing operations on the higher floor commence by turning a stream of water into the teams A. The first separation is made at grate B, which is of cast iron 3 ft. long and 2 ft. broad, with horizontal spaces 1 in. wide. As a rule one grate only is employed, with spaces $\frac{3}{4}$ in. wide; but Sopwith has found advantage and economy in using two, thus providing more grate surface for the pickers, one as described, and the other of similar size placed inferior to it, with spaces of $\frac{1}{2}$ in. each. The sides of the grates are planes, sloping inwards; they are of wood covered with sheet iron, $\frac{1}{8}$ in. thick. On them the operation of picking is performed; a man stands at the top of the grate, and rakes stuff from the team into it; the small stuff goes through at once, and what remains is picked into the three classes already mentioned, and is at once conveyed in wheelbarrows or wagons to their destinations. Water is employed to facilitate the raking out, to carry the small stuff onward until it is deposited in the trunk D at the bottom of the second grate, and to clean the larger stones left on the grate, so as to simplify the operation of hand-picking.

6022.

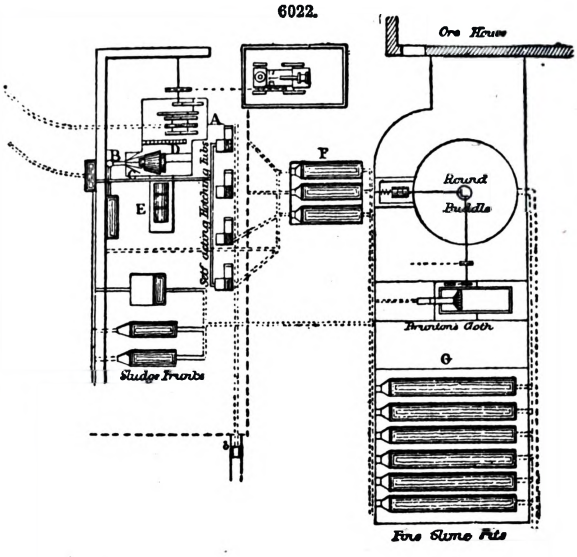

6023.

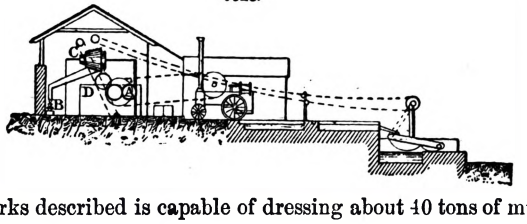

The stuff which passes through the second grate is of a size convenient for hotching or jigging. In England from 25 tons to 30 tons is a fair day's work to pass over one grate. It has been found that the double grate used in the works described is capable of dressing about 40 tons of mine stuff or bouse a day.

Between the lower grate and the sludge-trunk is the stirring trunk C, into which all the stuff enters which passes through the lower grate. Here, with a roller fixed at the lower end as a fulcrum, the stuff is agitated with a shovel, to expose it as much as possible to the current of water, so as to relieve it of any particles of sludge, which would greatly impede the action of hotching, and when clean it is taken out and placed alongside the hotching tubs, the smaller particles or sludge being carried over into the sludge-trunk.

The common hotching or jigging tub or sieve K, which we have described at page 2536, consists of a plain rectangular tub, nearly filled with water, in which works a rectangular sieve with close sides and an open wire bottom. The hotchings, or the stuff to be hotched, are filled into the sieve to a depth of about 8 in. It is then hotched for about a minute, more or less, according to the richness and nature of the stuff. The long end of the lever is next depressed, held by a catch, and the sieve thus raised out of the water. The top part of the stuff contained in it is then skimped off with a flat piece of sheet iron, held by both hands, into a wheelbarrow or wagon, as waste. More stuff is now filled in, and the same operation is repeated until the sieve is nearly full, when, besides cleaning off the waste, the matter next to it, called technically chatts, consisting of particles with lead and some impurity united, is also separated, and afterwards the pure ore is found nearest to the bottom, ready for delivery into the ore stores.

One hotching tub can treat from 8 tons to 15 tons of stuff a day, allowing for stops for taking out smiddum, rich ore.

To render the chatts marketable, further subdivision is necessary, and on most washing floors a separate crushing mill, adapted for fine crushing, is provided.

At the bottom of the hotching tubs, the ore which passes through the coarse wire bottom of the sieve accumulates; this is called smiddum, and generally contains upwards of 40 per cent. of lead, and is often nearly pure. To enrich it the buddle E is used. This is a plane slightly inclined, made of either wood or of iron, and about 6 ft. wide by 5 ft. long. A stream of water is let in at the top, and the smiddum is drawn gradually in small quantities across it, the operation being repeated until all the light particles have been carried away.

The sludge deposited in the sludge-trunk D, Figs. 6020, 6021, is emptied about twice a day, and is removed to the round buddle F. It is filled into the apparatus at *g*, where it is well broken up with knives fixed on a revolving axle. Water is also admitted, and with the sludge passes through a rotating cylindrical wire-work sieve, of 10 to 15 holes a lineal inch, which separates and delivers apart at *m* any chance piece of stone or lumps of sludge insufficiently broken up, chips of wood, and in Spain the bits of esparto grass proceeding from the common use underground of esparto-grass baskets for conveying the ores, and from the sandals worn by the miners, which are

made of the same material. The work which passes through this sieve is conveyed by the water to the centre of the round buddle in a launder, for which an inclination of 1 in 10 is sufficient.

The following modifications in the form of buddle usually employed in England have been introduced. The diameter has been increased from 18 ft. to 21 ft., and the centre, usually a tapered cone about 12 in. at the bottom and 6 in. at the top, is a plain cylinder 2 ft. in diameter; and in place of two revolving arms with suspended cloths sweeping along the top of the stuff being dressed, making three to four revolutions, two revolving sprays are employed, making seventeen revolutions a minute. In the sprays clean water is used, delivered by a small launder into a funnel on the upright axle.

Of the stuff delivered at the centre the heaviest particles are first deposited, the operation going on until the buddle is full to a depth of about 20 in., when the water is drained off. The stuff at the inner part, to a distance of 4 ft. from the centre, called the heads, will be found enriched from say 12 per cent. to about 40 per cent.; this is separated. The next lot, containing about 12 per cent., is also separated for re-treatment with the next parcel of work from the sludge-trunk, and the stuff at the outer circumference is wheeled away as waste, none of it probably containing more than 1 per cent. of ore. The heads, on a sufficient accumulation, are treated similarly, and can be enriched by a second operation so as to produce from 70 per cent. to 74 per cent. If the sludge presents difficulty for separation the operation would be repeated a third time.

The diameter of the buddle is 21 ft. The diameter of the centre, 2 ft. Number of revolutions of sprays, 17 a minute. Number of revolutions of sieve, 17 a minute. Number of tons treated, 8 tons to 10 tons an hour. Inclination of bottom, 1 in 10. The bottom is made of cement in preference to wood. The buddle is turned by a small water-wheel of about $\frac{1}{8}$ H.P.

The water which passes away from the sludge-trunk and the plain buddle, and also from the hotching tubs, when they are emptied, contains fine slime and ore in suspension, and is conveyed by drains to the slime-pits, which are shown at G. The slimes are treated in a machine called the Brunton's cloth, shown at H, and in detail, Figs. 6024, 6025. The cloth, which is of coarse canvas

6024.

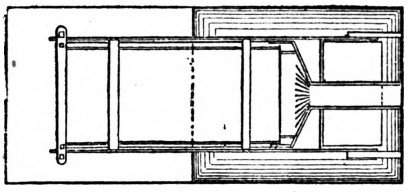

6025.

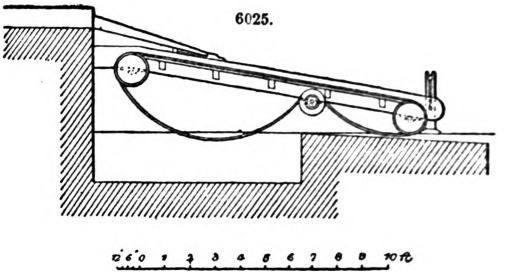

stiffened with paint, is strengthened and kept level across the face by laths of elm a few inches apart. It is held in a frame which is inclined about 1 in 6, the inclination being adjusted by suspending screws at the bottom, and passes over rollers fixed at the top and the bottom of the frame. The cloth moves upwards at a rate of about 15 ft. a minute. The slimes are well broken up amongst water, and ore delivered on to the cloth at *h*, Figs. 6020, 6021. A stream of clear water at *i* has sufficient force on the inclined surface of the cloth to carry away the light particles; the greater adhesion of the grains of ore enabling them to withstand it, and remain attached to the cloth, until dipped into the tank below, when they fall to the bottom.

There are therefore three adjustments for treating different natures of stuff, namely, inclination of the cloth frame, rate of movement, and quantity of clear water admitted. The apparatus as generally used is fairly efficient, and its efficiency is increased by the addition of a slight percussion motion in many of the German washing floors.

The first time of treatment in this machine suffices to enrich the stuff treated to about 45 per cent., the waste matter being carried away from the tail of the apparatus.

The enriched slimes of 45 per cent. are passed through the dolly tub—a cylindrical tub, about 3 ft. in diameter at the top, and 3 ft. deep, tapering towards the bottom, and nearly filled with water. The stuff as thrown in is kept agitated by revolving a fan inside, and when a sufficient quantity has been introduced, it is allowed to settle, during which time the sides of the tub are knocked with wooden logs or hammers, giving a vibratory motion to the water, and tending to keep the particles apart, and prevent their adhesion in knobs. Slimes can be enriched to about 70 per cent. by this means.

The form of crushing mill in general use in England, Fig. 6026, is worked generally by steam or water power. The mineral crushed is passed to the hotching tubs, and is subsequently treated much in the same manner as on the higher floors, with this difference, that in many cases advantage is taken of the motive power required for driving the mill to attach a shaft from which to work the hotching sieves. The work to be crushed is delivered into the hopper *a*, passes through the rollers *b*, *b*, which are kept in contact by the pressure of a heavy lever *c*, loaded at one end, and falls into *d*, a cylindrical rotating sieve, inclined about 1 in 8, covered with coarse wirework, which allows the mineral, when sufficiently crushed, to pass through, returning larger particles to the raff-wheel *e*, which elevates them to a shoot, conveying them to the hopper *a* again. The whole of the crushed material is passed through a stirring trunk, making a partial separation of the sludge previous to its being treated in the hotching tubs.

A strong building is required, owing to the height at which the rollers are placed above the ground, and from the strain caused by the heavy weight suspended from the lever, frequently about 15 cwt. to 20 cwt. suspended at a distance of 9 ft. to 10 ft. from the fulcrum, which is in continual and violent motion when the mill is at work.

In the lower, or crushing mill, floors, next to be described, and which were erected some time after the higher floors already alluded to, an attempt has been made to secure continuous treatment for the ores.

The mine stuff which requires crushing is here treated. To become fit for the crushing mill, it is reduced to a size which would allow it to pass through a 5-in. ring.

The general arrangement of the crushing-mill dressing floors is shown in Figs. 6022, 6023, and 6027 to 6029. The stuff to be crushed is conveyed by wagons, and emptied into the hopper *a* of the crushing mill. When crushed, it is elevated by D, an endless link-chain with buckets, called the Jacob's ladder, and delivered into a classifying trommel C, which returns to the crushing mill all the particles which are too large for the hotching machines, separates all the sludge which is considered too small for hotching, and delivers in another direction the material of proper size and condition for machine hotching.

The crushing mill, Figs. 6030 to 6032, is compact, and

6026.

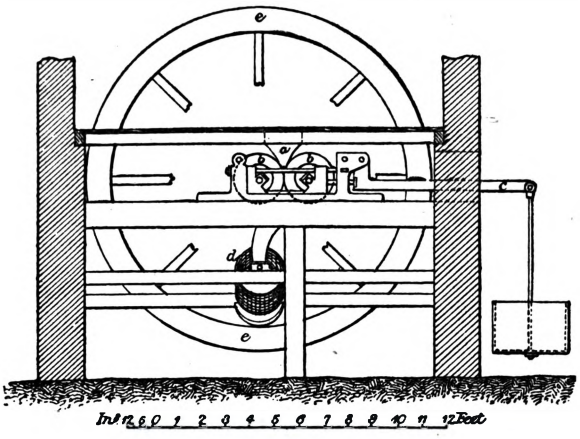

6027.

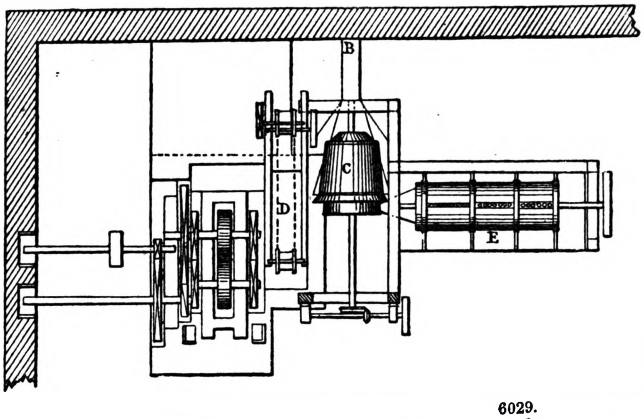

6028.

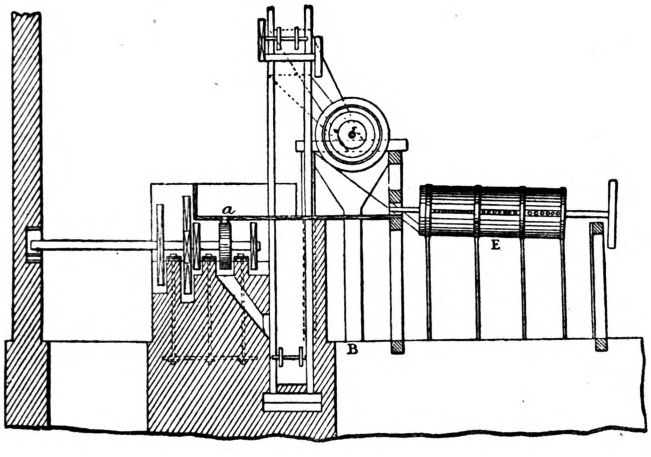

6029.

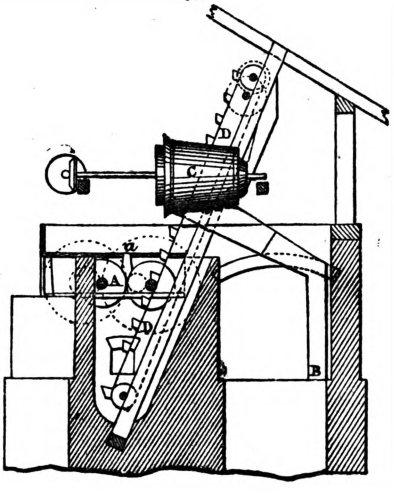

any degree of compression can be given to the rollers by means of the caoutchouc buffers, which are equally effective as heavy weights and levers. The rolling surface is of chilled iron, made as a ring, which is kept on the roller-shaft by three wedge-bolts. The diameter of the rollers is 37 in., the breadth 10½ in., and they make eight revolutions a minute. The velocity of the rolling surface is therefore 77⅓ ft., and the crushing area of each roller is 68 sq. ft. a minute. This form of crushing mill is self-contained, requires scarcely any foundations, and absorbs less working power in friction than the form used in England; and the working parts are few, easily dismounted, and can

be readily manœuvred. The shafts carrying the rollers are geared with toothed wheels at each side. One roller, therefore, does not work by friction only, as in many mills. By being geared, a better grip is secured, and the action is altogether more steady and regular. The toothed wheels have teeth unusually long, so as to keep in gear when the rollers become separated by the passage of some large and hard stone, or other strain tending to separate them, which may be sufficiently powerful to overcome the compression of the india-rubber springs. With the rollers in fair order, from 5 tons to 6 tons an hour can be treated.

No difficulty has been experienced from the use of the caoutchouc springs, even during the summer, when working in a temperature of 90° in the shade. One set has lasted about two years, and with care should serve as long again.

6030.

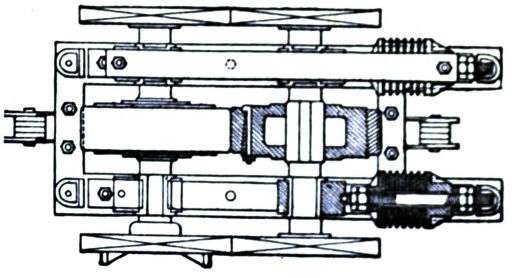

6032.

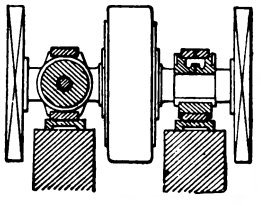

6031.

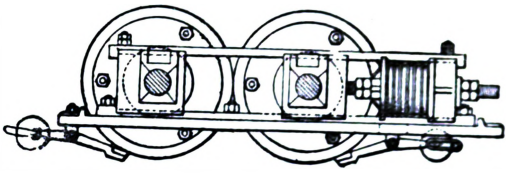

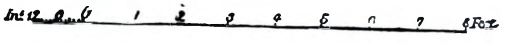

The wear of the chilled rollers is very variable. Steel ones are occasionally used, and answer very well, and their use would doubtless become general but for the expense. From four to eight months is the general time of service, representing, say, 5000 tons to 10,000 tons of material crushed by the chilled rollers Sopwith used.

In considering the action and duty required of a hotching machine, it must be evident that the separation, by gravitation, of the several matters treated in such a machine must be greatly facilitated, when the particles are of uniform size, otherwise it is clear that a large piece, say, of iron pyrites, would gravitate more quickly than a small one of lead ore; for, whereas the weight increases as the cube, the surface opposed to the resistance offered by the water is only as the square of the side of particles of similar form. True, in the English system lead has been satisfactorily dressed without sizing; but it is principally because lead, for the most part, is raised from veins, where the accompanying impurities are of much less specific gravity. There would be no difficulty, either, in showing that even in those cases the dressing operations would be improved and performed more economically by the use of sizing apparatus, which is simple and efficient, and inexpensive both in first cost and future working. For the application of sizing to be efficient in the treatment of ordinary ores of lead, it is by no means necessary to employ such elaborate arrangements as are in use in Germany.

The number of classes adopted by Sopwith have given good results, and are as follows;—

Of the material crushed, all which will pass through a perforated plate with round holes of 1½ millimètre is treated in buddles. All particles which will not pass through a perforated plate with round holes 10 millimètres in diameter are returned to the crusher. All the material to be hotched, therefore, is clean shingle, which is separated into the following sizes;—

		Millimètres.			Millimètres.
No. 1, which will not pass through holes		1½	in diameter, but will pass through		2½
„ 2,	„	„	2½	„	„ 5
„ 3,	„	„	5	„	„ 7
„ 4,	„	„	7	„	„ 10

The classification is thus effected; the material having passed through the crushing rollers is raised by the Jacob's ladder, and delivered into the first trommel C, which is constructed of an outer shell of perforated iron with round holes 1½ millimètre diameter, and an inner shell of stronger iron with round holes of 10 millimètres diameter. A perforated pipe, parallel to the outer edge of the trommel, conveys jets of water to facilitate the separation. The work after entering progresses naturally onwards and downwards; the sludge passes through the inner and outer shells, and is conveyed in an iron launder to B; the particles insufficiently crushed arrive at the lower end of the trommel, and, dropping into the buckets fixed in the circumference of the inner trommel serving as a raff-wheel, are lifted up and delivered into a shoot with sufficient elevation to carry them to the hopper again. The largest quantity, however, goes by a second launder to the trommel E. supplied with water in a similar manner to the first one; an inclination of 1 in 15 is sufficient to give onward motion to the material being treated. It is equally divided into three classes, the first being covered with perforated plates, with holes 2½ millimètres in diameter, the second 5 millimetres in diameter, and the third 7½ millimètres in diameter and the stuff falls through one or other of these divisions,

6033.

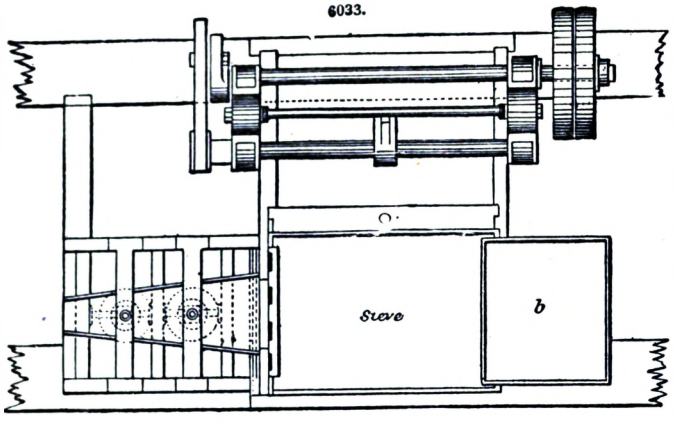

6034

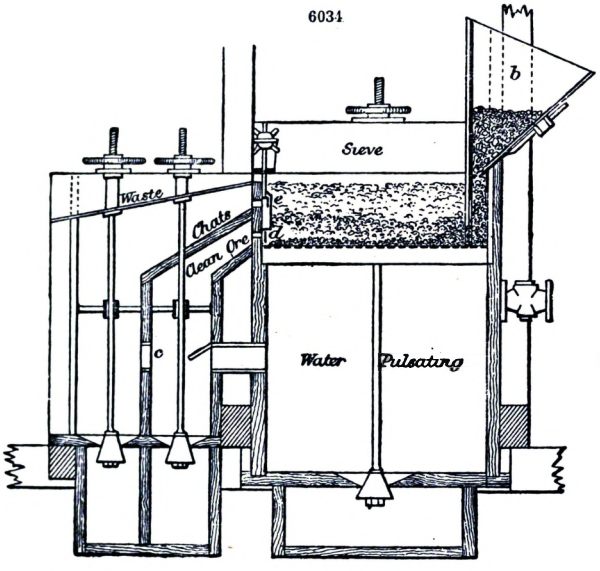

6035.

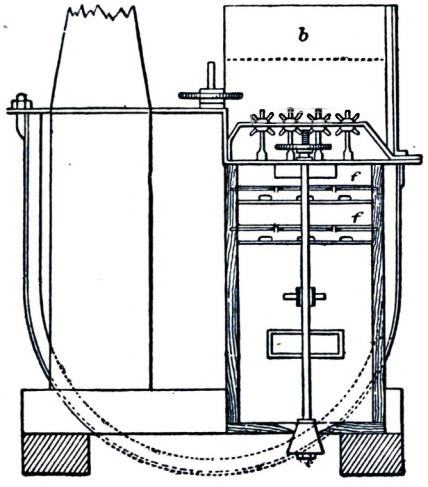

or is carried over the end to their respective compartments, whence it is taken to the hotching tubs, each tub being adapted for the size it is intended to treat.

The hotching machines employed, Figs. 6033 to 6039, are self-acting. Instead of the sieve moving, as in the common one, it is stationary, and the water is set in motion by a loosely-fitting piston *a*, Fig. 6036, which at each pulsation raises all the stuff in the sieve. The relative positions of the several particles naturally change at each stroke, the heaviest or purest particles of ore eventually being brought to occupy the bottom. The stuff, consisting of ores, waste, and chatts, is delivered into the hopper *b*; the bottom of the sieve is level, but the new stuff, falling from the hopper, gradually displaces that in the sieve, causing it to move forward. On reaching the end of the sieve, a distance of 28 in., a perfect separation is found to have taken place; the lighter particles are at the top, and at each pulsation of the machine some are carried over the shoot into

6036.

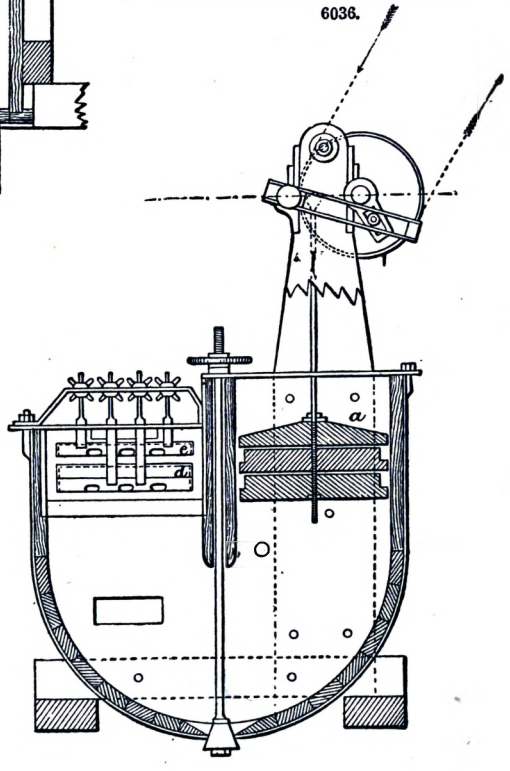

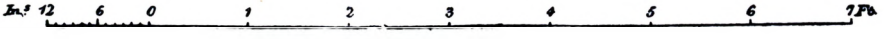

6037.

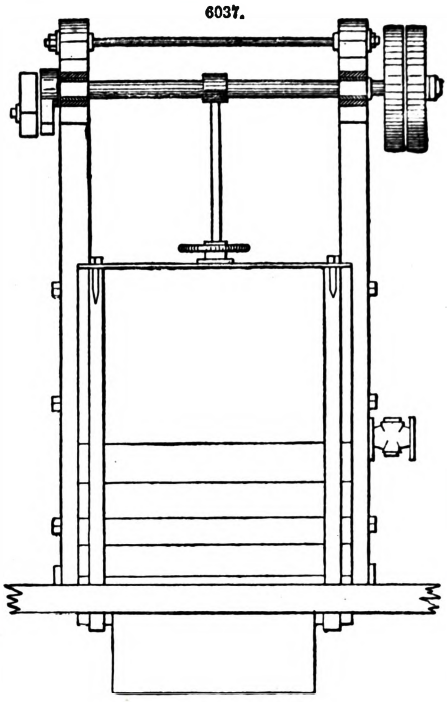

6038.

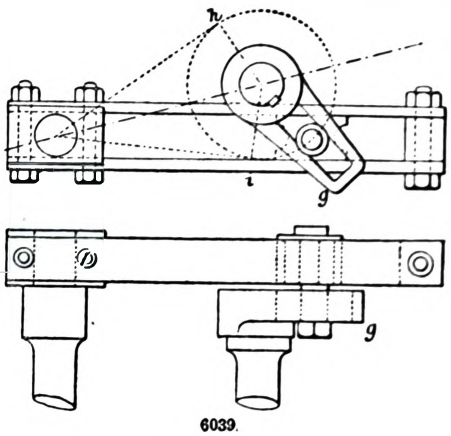

6039.

the waste launder. The heavy ore is at the bottom, a depth of 1½ in. to 2 in. being generally occupied by it. Apertures properly regulated admit the ore into the cistern *c*, a broad flap of sheet iron *d*, Figs. 6034 to 6036, is regulated by the man in charge to such a distance from the bottom as is found to pass the ore only, and an upper flap *e* and apertures serve for the exit of the chatts. The size of the apertures is also regulated at will by means of a slider *f*, Fig. 6035, worked by a screw, which cuts off more or less of the holes as may be necessary. A fast and a loose pulley are attached to each hotcher. The ore and chatts are emptied from time to time from the cistern.

Formerly the piston was moved by an eccentric; the present motion is given by a crank *g*, Figs. 6038, 6039, of variable stroke working in a slot. The down stroke is given as the crank moves from *h* to *i*; and as the crank-pin revolves at a uniform rate, the down stroke, during which the stuff is lifted, is therefore quick, and the return stroke slow, allowing more time for the deposition of the particles. The stroke of the crank can be varied by moving the crank-pin up and down a slot, the pin being fixed by means of a nut behind.

From experiments with different hotching machines, it has been ascertained that the number of strokes a minute suitable for different sizes of work, can be advantageously increased for the larger particles, while the length of the stroke is found to be of less importance, although this also has been similarly increased.

The machine for washing No. 1 size has a stroke of 1 in., and makes 82 strokes a minute. No. 2 size, a stroke of 1¾ in., and 84 strokes a minute; No. 3 size, a stroke of 2 in., and 86 strokes a minute; No. 4 size, a stroke of 2¾ in., and 96 strokes a minute.

The machine for the finer stuff has a different movement, applicable more particularly to short strokes,—a revolving cam, as in Fig. 6040, with buffer-springs composed of well-prepared caoutchouc; its other details, as regards self-action, being similar to those already described.

6040.

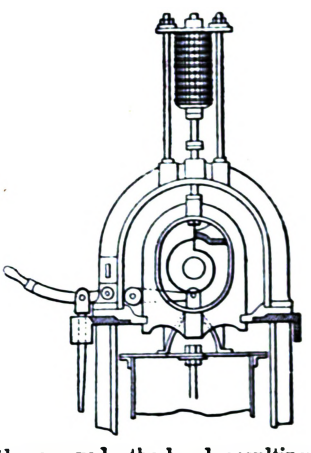

The waste from each of the tubs is conveyed by the water which overflows with it along the waste launder underground to *b*, Figs. 6022, 6023, and is there delivered into wagons, with perforated iron bottoms so as to allow the water to drain off, and wheeled over the waste heap.

The sludge which passes through the outer skin of the first trommel is delivered into a separator B, Figs. 6022, 6023, which consists of a cylinder with an annular space formed by the insertion of an inner block, regulated in diameter according to the size of the work it is intended to operate upon. This is shown in detail in Figs. 6041 to 6043. In this annular space a stream of water is constantly rising, brought by the supply-pipe *a*, of sufficient force to effect a separation, carrying the finer particles over the top into the launder *b*, whence it is conveyed away for treatment in the round buddle and the Brunton's cloth, whilst the coarse and richer particles fall to the bottom, and are treated in sludge-trunks, or ties, Fig. 6022, of simple construction. A stream of water distributed over the whole breadth of the tie is admitted; the sludge is filled in at the top with a shovel, being well distributed there, and exposed to the current of water, the heaviest particles settle first, and the lighter ones are subsequently removed; the heads resulting from the first operation are put aside, and subjected again to the same treatment. After being passed twice, or at the most, three times through the tie, they are fit for market.

The other sludge which was carried upward in the separator is conveyed to the sludge-pits at F, Fig. 6022, and treated by the round buddle, while the finer portion which does not settle there is carried by the water into the slime-pits at G, where it is taken out, and treated by Brunton's cloth.

The machinery employed is worked by a 10 H.P. portable engine.

6041.

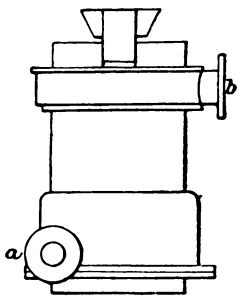

6042.

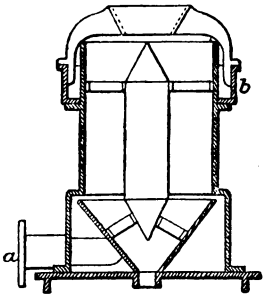

6043.

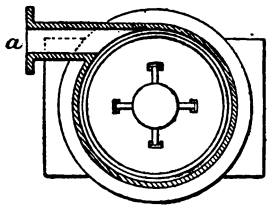

Blake's Stone-breaking Machine.—Figs. 6044 to 6048 are of this useful and ingenious machine as made in England by H. R. Marsden, Leeds. It is driven by steam power, and consists of a crushing hopper, in which the stone is broken between a pair of jaws, one fixed in the frame of the machine, and the other vibrating on a centre through a short distance, worked by a toggle-joint and long lever which receives its motion from a crank-shaft.

The fixed jaw A, Fig. 6044, against which the stone is crushed, is a vertical fluted block of cast iron, bedded in zinc in the end of the very strong cast-iron frame of the machine, and held in its place by loose tapered cheek-pieces B, B, which fit into recesses on each side of the hopper. The movable jaw C is fluted on the breaking face to correspond with the fixed jaw, the ridges of the movable jaw being opposite the grooves of the fixed jaw; and the movable jaw is suspended from a large transverse pin above the frame. At the back of the movable jaw, to give the motion, are two struts D, D, in the form of flat cast-iron plates extending the whole width of the jaw, and bearing in the middle in the upright thrust bar E; this bears at the bottom upon the

6044.

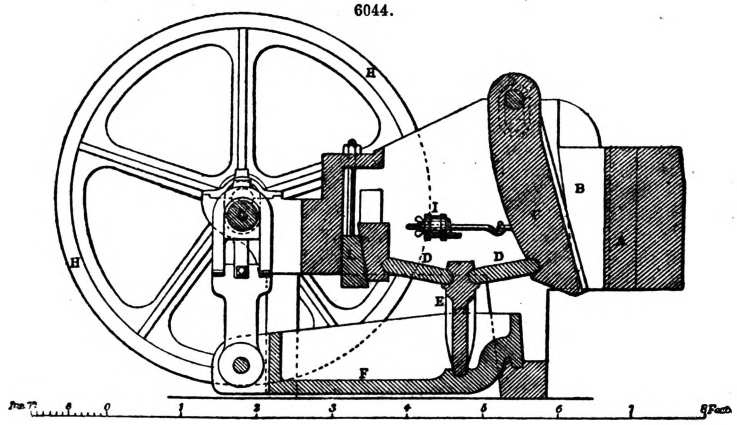

6045.

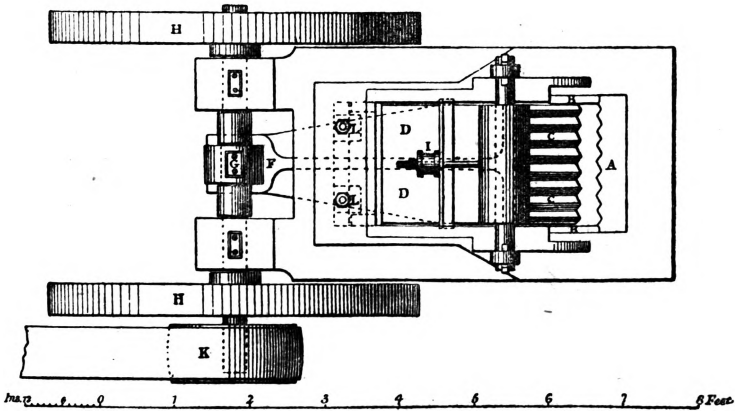

main lever F, the whole forming a horizontal toggle-joint of simple construction and great strength. Figs. 6044, 6047, show the thrust bar E of the toggle-joint; and Fig. 6048, is a plan of one of the strut-plates D. The main lever F, Fig. 6044, has its fulcrum on a cross beam cast in the frame of the machine, and when lifted by the connecting rod and crank G at the outer end it presses forward the breaking jaw C by straightening the toggle-joint. In the depression of the lever the jaw is drawn back ready for the next stroke by the india-rubber spring I.

6046.

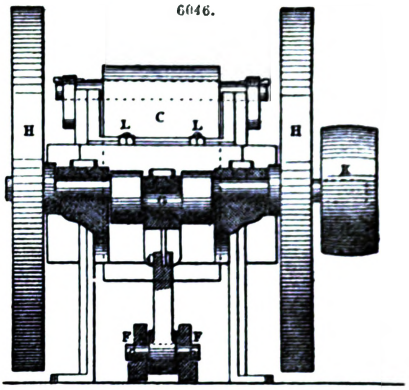

The entire frame of the machine is in one single casting, and has feet cast upon it to stand upon a brick or stone foundation; the feet have bolt-holes cast in them for the purpose of bolting the machine down to the foundation; in practice, however, it is found to require nothing besides its own weight, about 8 tons, to keep it steady in its place. It is fixed high enough to allow a railway wagon or a cart to be placed under the hopper to receive the broken material direct from the crushing jaws. The crank-shaft G carries a fly-wheel H on each side of the machine, and also the driving pulley K, which receives a belt from the steam-engine or shafting employed to drive the machine.

The movable jaw C, Fig. 6044, works on a round bar of iron, which passes loosely through it, and forms the centre upon which it vibrates. Every revolution of the crank causes the lower end of the movable jaw to advance towards the fixed jaw about $\frac{3}{8}$ in. and return, and when the jaw is drawn back, the stone in the hopper falls lower down to fill up the space caused by drawing back the jaw, and is then ready for the next bite of the jaws, and so on until the broken stone drops out at the bottom. The extent of motion of the crank end of the main lever F is $5\frac{1}{2}$ in., giving a total leverage of 14 to 1. The distance of the jaws apart at the bottom determines the size of the broken material, and can be altered at pleasure. A variation of $\frac{5}{8}$ in. can be made by raising or lowering the screws which adjust the wedges L, thereby altering the abutment for the toggle-joint. Further variations are made by changing the strut-plates D, and putting in longer or shorter ones, as may be required.

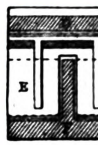

6047.

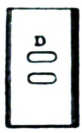

6048.

6049.

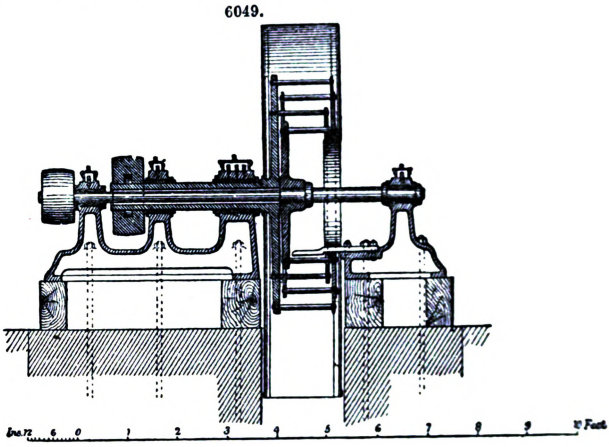

Thos. Carr's Mineral Disintegrator is shown in Figs. 6049 to 6051. It is made of great strength in the beaters, and small diameter, being $4\frac{1}{2}$ ft., and having four cages of beaters. The two discs are both carried from the same side of the machine, the shaft of the left-hand one being made

6050.

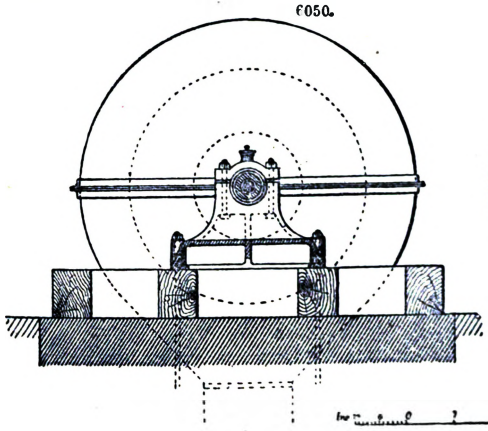

6051.

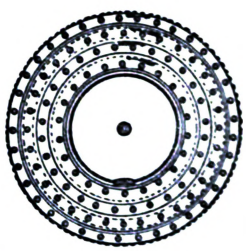

tubular, and that of the right-hand disc carried through it without touching it, as in Fig. 6049; by this arrangement the central opening through which the material is fed into the machine is left entirely unobstructed by the driving straps, and the material can be thrown into it by a shovel. The speed it is driven at varies from 350 to 500 revolutions a minute, according to the hardness of the material that is being pulverized, the degree of fineness to which it has to be reduced, and the driving power available.

When a soft and adhesive material is operated upon, a portion adheres to each beater, and the machine sometimes, though very rarely, requires cleaning after ten or twelve hours' working. As the material adheres only to the back surface of each bar, while the front remains clean, the machine is readily cleaned by running it backwards for a short time, where there is the means of reversing the driving power; or the cleaning is effected without reversing by throwing in while at full speed 1 or 2 cwt. of some brittle and dry material.

The 4½-ft. machine is capable of pulverizing 5 to 15 tons of material an hour, according to the nature of the materials and the degree of fineness to which they are reduced; the amount of power required to drive the machine, which varies with different materials, is from 10 to 25 horse-power. See MILLS, p. 2488.

Dressing Silver Ore in Colorado.—The silver ore of the Comstock lode in Colorado is chiefly

6052.

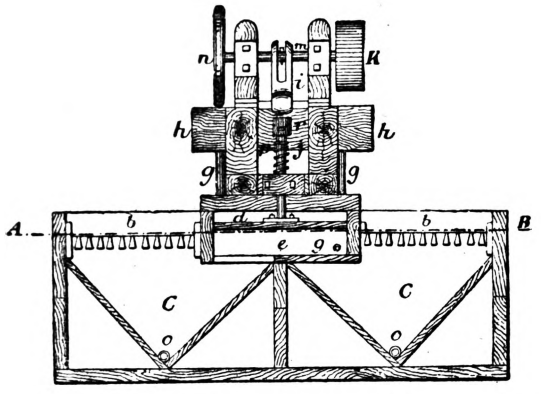

6053.

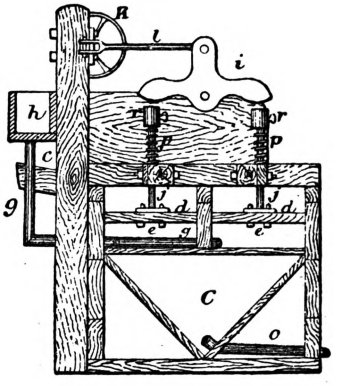

argentiferous galena, two or three varieties of blende, some argentiferous grey copper, some ruby silver, and other rich silver minerals.

The concentrating machinery used for the preliminary dressing of the ore as a preparation for smelting comprises crushers, Cornish rollers, screens or appliances for sizing the material, and John Collom's ore-washing machine.

Figs. 6052 to 6055 show some of the details of the construction of this machine, or more correctly of two machines, which for convenience are put together as one, though quite independent of each other in their operation. Fig. 6052 is a longitudinal section; Fig. 6053, a transverse section; Fig. 6054, horizontal section on line A B; Fig. 6055, perspective view.

A double machine, like that shown in Figs. 6052, 6054, consists of a box or tank about 7 ft. long and between 3 and 4 ft. wide, divided by a middle partition into two parts. Each of these parts is fitted on the inside with inclined partitions sloping from the four sides toward the centre of the box, and thus forming two cisterns C, above each of which is placed a sieve *b*. The sieve frame may be furnished with a wire-cloth sieve of any desired degree of fineness, according to the character of the ore to be dressed. Between the two sieves are the piston or plunger compartments *e*, separated from each other, and each connecting by an aperture *f* with one of the cisterns C. Each aperture *f* affords communication to the cistern nearest to it, but without any connection with the other cistern.

6054.

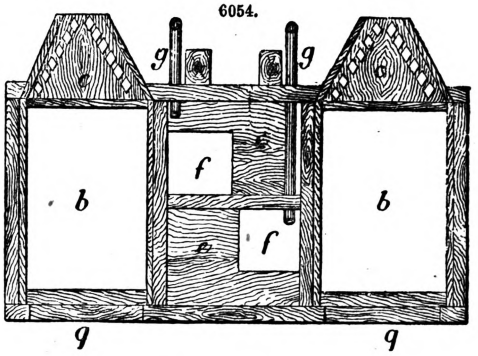

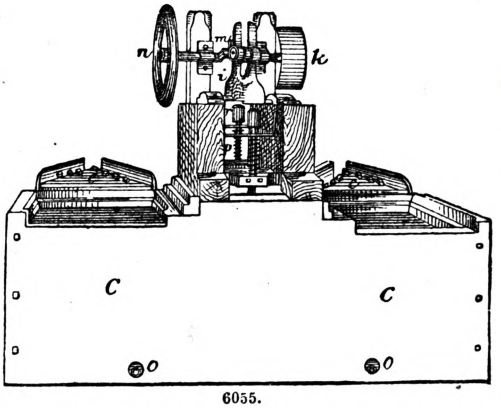

6055.

The plungers *d* move up and down in the compartment *e*, being forced rapidly downwards by the rockers *i* and lifted again by the action of springs *p*.

The rockers are set in motion by pulleys K, with which they are connected by eccentric-rods *l*. The cisterns and plunger compartments are supplied with water by pipes *g*, and when the outlets *o* are closed, the machines are filled with water, the overflow being at *q*, in front of the sieves. The movements, therefore, of the plungers, which follow each other in rapid succession, produce an agitation of the water, which rises through the sieves with a constantly throbbing motion. The crushed ores, consisting of heavy mineral and gangue, are brought upon the sieves *b* by a stream of water that enters through the distributing boards *c*, and, being subjected to the agitation caused by the plungers *d*, are held in a state of partial suspension, during which the heavier metallic particles sink, while the earthy matters rise to the top, and are carried off by the water at the overflow *q*. That portion of the metallic substance which is fine enough to pass the meshes of the sieve falls through into the hutch or cistern C, and may be withdrawn thence at stated intervals by the outlet-pipe *o*; while the coarse part remains upon the sieve, and is cleaned up from time to time, leaving a stratum on the sieve for continued operations. The thimbles *r*, on the plunger-rods *p*, serve to adjust the length of the stroke. The action of these machines is excellent. They effect the separation of the galena in a very thorough manner, not only from the earthy gangue, but from the lighter metallic minerals, such as the zincblende and grey copper. The last two are obtained together, owing to the similarity of their specific gravities, and they are also mingled with heavy spar and some quartz.

The general arrangement of this crushing and concentrating machinery is as follows:—The ore is brought upon the receiving floor, where the larger pieces are broken sufficiently to admit the fragments to the crusher. The clean pieces of galena and zincblende are also selected by hand as far as possible before the material is sent to the dressing machinery. After passing through the crushers the ore falls upon a screen furnished with a No. 6 sieve, that is, having six meshes to the lineal inch. Whatever passes over this screen without falling through must be still further reduced in size before going to the washing machines, and passes, therefore, from the screen to a set of Cornish rollers placed below. The material that falls through the sieve enters an elevator and is raised to the sizing sieve that stands above the washers. The elevator also brings the material delivered from the rollers, still further reduced by them in size, to the same point The sizing sieve or screen consists of a frame about 6 ft. long by 18 in. wide, slightly inclined from one end to the other. The upper end of the frame is fixed on a pivot, while to the lower end is attached a long arm and connecting rod, by means of which a revolving cam raises the lower end of the frame about 2 in., and lets it drop again upon a fixed support below. The movement is rapid enough to impart a constant jigging motion to the screen, and thus to assist the material upon it to slide down over its surface. The upper part of the screen is furnished with a No. 9 sieve, while the lower half has a No. 6. The material that passes through the first goes to the finer washing machines; that which falls through the second, to a coarser machine; while all that passes entirely over is returned to the rollers for finer crushing and a repetition of the process. The material then goes to the ore-washers. Two of the double machines, containing four sieves, stand on a raised floor sufficiently elevated above the other two that the material delivered from the outlet-pipes *o* of the first may flow to the sieves of the second. One of the upper machines, and one of the lower immediately in front of it, are furnished with No. 6 sieves for washing the coarser material, while the other two, upper and lower, are furnished with No. 10 sieves for the fine stuff. The ore that enters upon the upper sieves is therefore rewashed on the lower sieves, in order to ensure a more effective separation. The overflow of the two upper sieves of either degree of fineness, that is, the material discharged at *q*, is washed again upon one of the lower sieves of the same degree of fineness—the overflow from that sieve being worthless gangue—while that which passes through the sieve is second quality ore, or blende and copper mixed. The stuff that passes through the two upper sieves of either degree of fineness is delivered from the outlet-pipes *o*, and comes upon the remaining sieve of corresponding degree of fineness, the material which passes through that sieve being of first quality, while the overflow at *q* is of second quality.

By this arrangement there are three products obtained; the pure galena, which is almost entirely free from other mineral; the zincblende and grey copper, mixed with heavy spar and quartz, almost free from galena; and the gangue, which is very clean and free from valuable mineral.

The eight sieves, or four double machines, are capable of treating 20 to 30 tons of ore a day; and as the stuff is all washed twice, the capacity of each double machine for a single washing is from 10 to 15 tons a day.

In the treatment of certain of the Comstock ores by the process of pan amalgamation, the settlers or separators used are similar to Figs. 6056, 6057. A hollow pillar or cone C is cast in the centre of the bottom, within which is an upright shaft S. This shaft is caused to revolve by gearing below the pan. To its upper end is attached a yoke or driver D that gives revolving motion to arms A, extending from the centre to the circumference of the vessel. The arms carry a number of stirrers of various devices, usually terminated in blocks of hard wood P, that rest lightly on the bottom. No grinding is required in the operation; but a gentle stirring or agitation of the pulp is required in order to facilitate the settling of the amalgam and the quicksilver. The stirring apparatus, or muller, makes about fifteen revolutions a minute. The settler is usually placed directly in front of the amalgamating pan and on a lower level, so that the pan is readily discharged into it. In some works two pans are discharged into one settler, the operation of settling occupying four hours, or the time required by the pan to grind the amalgamate another charge. In other works the settling is only allowed two hours, and the two pans, connected with any one settler, are discharged alternately. The consistency of the pulp in the settler is considerably diluted by the water used in discharging the pan, and by a further supply which is kept up during the settling operation. Occasionally, however, the pulp is brought from the pan into the settler, with the addition of as little water as possible, and allowed to settle for a time by the gentle agitation of the slowly-revolving muller, after which cold water is added in a constant stream. The quantity of water used,

affecting the consistency of the pulp, and the speed of the stirring apparatus, are important matters in the operation of settling or separating. Since the object of the process is to allow the quicksilver and amalgam to separate themselves from the pulp and settle to the bottom of the vessel, it is desirable that the consistency should be such that the lighter particles may be kept in suspension by a gentle movement, while the heavier particles fall to the bottom. If the pulp is too thick, the metal will remain suspended; if it is too thin, the sand will settle with it. Too rapid or too slow motion may produce similar results, because by too violent motion the quicksilver will not come to rest on the bottom, while, if the motion is too slow, the coarser sand will not be kept in circulation.

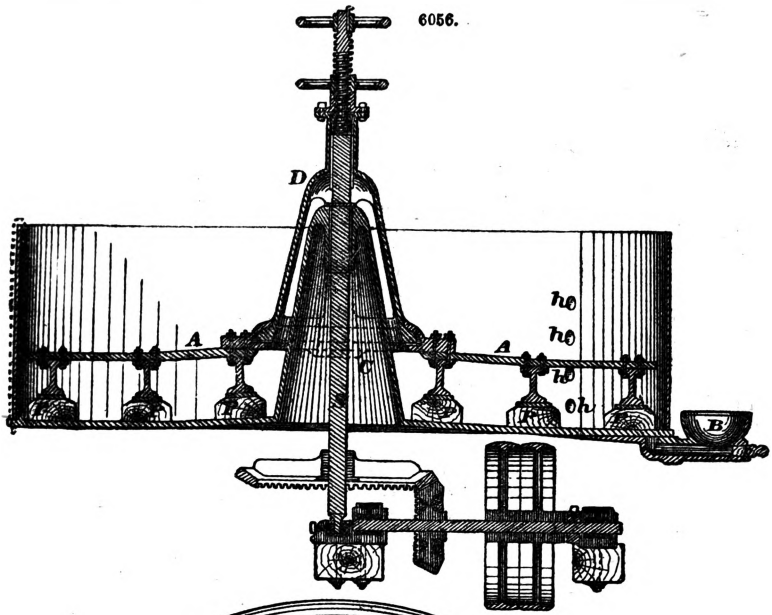

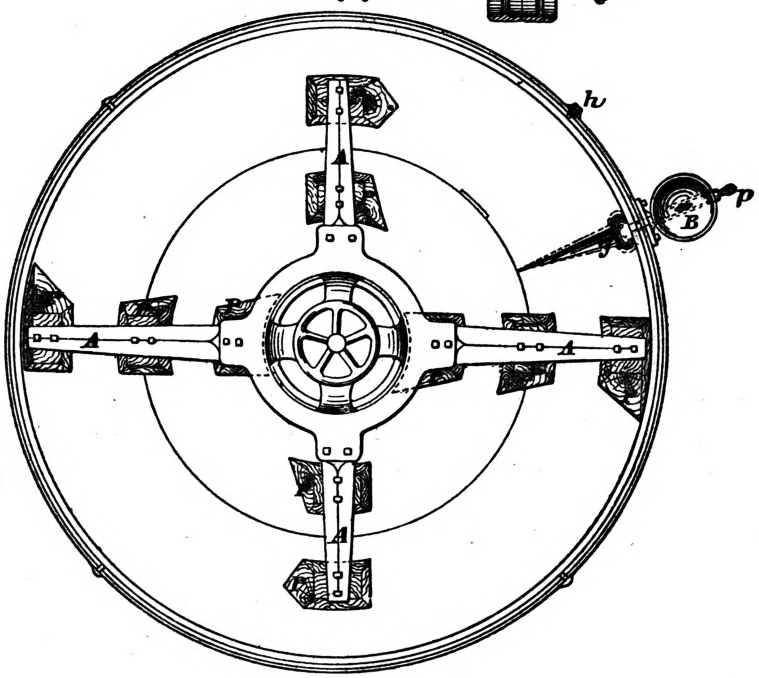

6057.

A discharge-hole near the top of the settler permits the water carrying the lighter portion of the pulp to run off, and at successive intervals the point of discharge is lowered by withdrawing the plugs from a series of similar holes *h*, *h*, in the side of the settler, one below the other, so that finally the entire mass is drawn off, leaving nothing in the settler but the quicksilver and amalgam.

There are various devices for discharging these. Usually there is a groove or canal in the bottom of the vessel, as in Figs. 6056, 6057, leading to a bowl B, from which the fluid amalgam may be dipped or allowed to run out by withdrawing the plug *p* from the outlet-pipe.

The quicksilver, charged with amalgam, is carefully cleaned by washing with water, and removing from the surface the associated impurities, such as heavy particles of dirt or pyrites. In some cases the cleaning is performed in a small iron pan resembling the settler in manner of construction, but much smaller, in which it is stirred slowly with plenty of clean water, which serves to wash out the impurities and remove them from the pan. When properly cleaned the amalgam is strained through a canvas filter or conical bag 10 or 12 in. in diameter at the top, and 2 or 3 ft. long. The quicksilver is drained off and returned to the pans for further use, while the amalgam is thus obtained for the retort.

Brückner's cylinder, Figs. 6058 to 6060, is a contrivance designed to roast ores with salt at a much

6058.

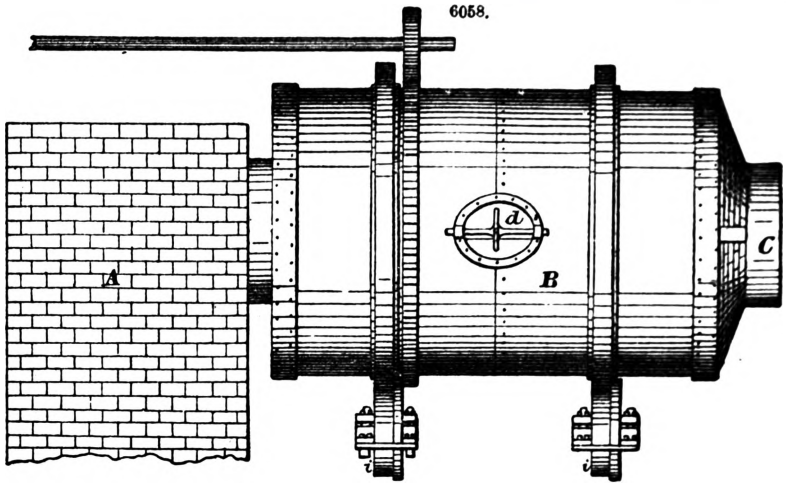

6059.

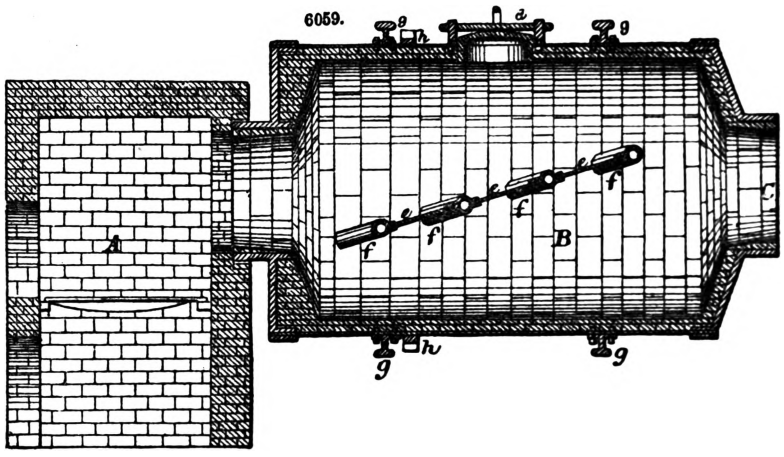

less manual labour than is involved in the operation of the reverberatory furnace. It is a horizontal cylinder, commonly about 11 or 12 ft. long and 5 or 6 ft. in diameter, constructed of iron, usually boiler-plate, and lined with fire-brick. It is supported on rollers *i*, so that it may turn freely when set in motion by the revolving gear *h*. One end of the cylinder communicates with a brick fire-place A, while the opposite end C is let into the stack, so that the frame of the fire-place passes through the interior of the cylinder. Within the cylinder there is a diaphragm or partition running longitudinally through the greater part of its length. This partition is made of iron, and covered with fireproof material. It is usually made in sections *e*, which are held in grooves that are formed in the ribs *f*. These ribs are made in tubular form, with open ends, which, extending outward beyond the side of the cylinder, permits the passage of air, and are thus partially cooled.

6060.

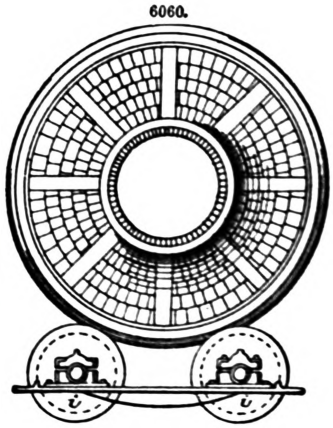

When the several sections are in place, the entire partition or diaphragm has the form of a rhomb whose ends are obtuse angles. It is placed at an angle of 10° or 15° with the longitudinal axis of the cylinder, so that as the cylinder, containing a charge of ore, is revolved, the diaphragm causes a continuous passing and repassing of the material from one end to the other, and ensures at the same time an intimate mixture of the whole mass.

A door *a*, for charging and discharging the ore, is placed in the surface of the cylinder opposite the partition. The outside of the cylinder is provided with ribs or flanges *g* concentric with the axis of revolution, which rest on the rollers *i*; also with a toothed rib with which the pinion is placed in gear at *h*, causing the whole to revolve. The fire-place and chimney are built of brick or stone, with funnels large enough for the ends of the cylinder, which may fit into their place easily and revolve.

Between the end of the cylinder and the stack there is a dust-chamber, in which the fine material that is carried through with the draught may have an opportunity of settling.

The charge of ore for this cylinder consists of 3000 to 4000 lbs., mixed with from 6 to 10 per cent. of salt. The cylinder revolves slowly, making only one or two turns a minute.

Rittinger's Percussion Table.—Fig. 6062 is front elevation of a double Rittinger table; Fig. 6064, a plan, Fig. 6066, a side view; Figs. 6061, 6063, 6065, details. This apparatus consists of a wooden

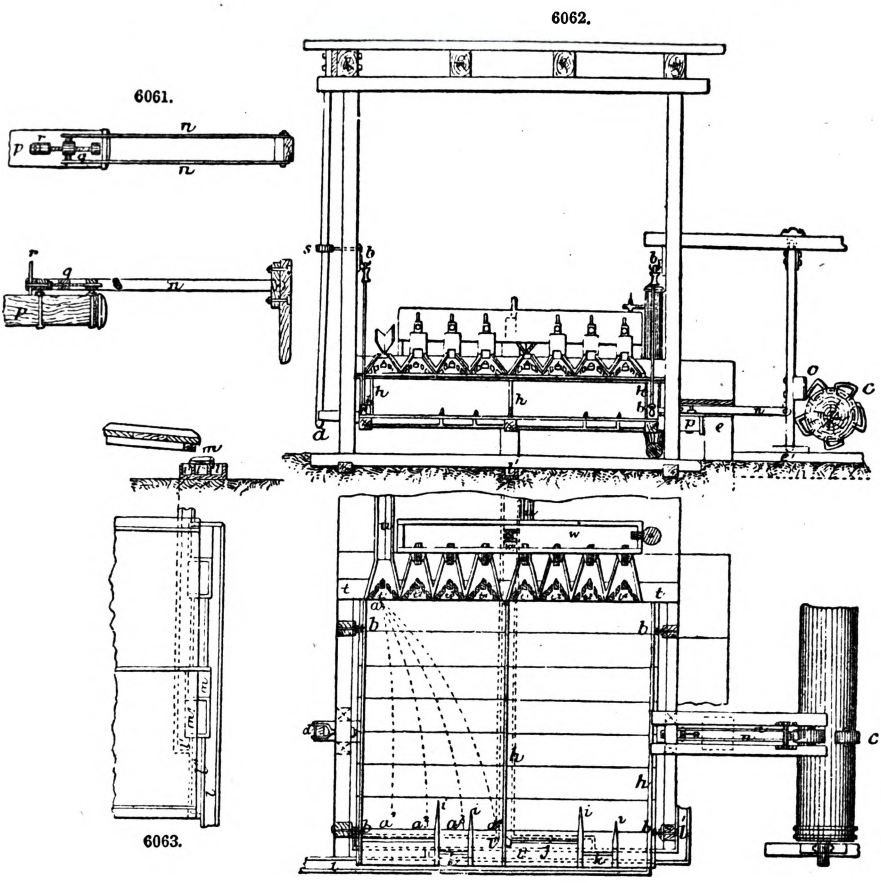

table, or platform, about 4 ft. wide and 8 ft. long, which is suspended by iron rods at the four corners, as *b*, *b*, Figs. 6062 to 6066, presenting an inclined plane, over which the water and material, supplied at the upper end, may flow evenly toward the lower end. The table is so hung as to

move freely, in a lateral direction, when acted upon by a cam *c*, and may be thrown back by the action of a spring *d*, so as to strike forcibly against a timber *e*, firmly imbedded in the ground, by which means a shock is imparted to the table and the material upon it.

The characteristic features of this table, as compared with the ordinary percussion-table, are that the shock is applied at one of the long sides instead of at the end, and that it is self-discharging and continuous in its operations. On the old-fashioned percussion-table—the material being supplied at the upper end and evenly distributed across the width of the table by a stream of water, and the shock being imparted at the same end—the tendency of the heavier particles is to move backward at each throw or shock of the table, while the lighter particles, following the impulse of the stream, move downward toward the front edge, and are there discharged. In the case of the Rittinger table, all the particles, which are fed at the upper end and near one side, move downward with the stream; but as the percussion is applied at the opposite side, they obtain at each throw of the table a lateral motion, which varies in amount according to the density of the particles, so that the heaviest—the grains of ore—move entirely across the table to the side opposite to that at which they entered; the lighter particles, or grains of ore and gangue combined, move part way across, while the lightest, or grains of earthy character, move downward in a nearly straight line, describing curves, as at *a*, *a'*, Fig. 6064. By this means a separation of the particles is effected, according to their density, and as they are discharged at different parts of the front edge of the table, they may be received there in separate troughs provided for the several classes; the first, consisting of nearly pure ore, being ready for smelting or other metallurgical treatment; the second, consisting of mingled ore and gangue, may be returned for repeated dressing; and the third, nearly pure gangue, is allowed to run to waste.

Fig. 6065 shows the construction of the frame of a double table, consisting of two cross-pieces *f* and five longitudinal pieces *g*. This frame is covered by hard-wood plank or boards, which are smoothly dressed and carefully fitted together, forming the surface of the table over which the material for concentration is allowed to pass. As the top of the table, hitherto constructed of maple boards, soon begins to rot or wear upon the surface, and thus to lose its desired smoothness, it is better to cover it with a stout, waterproof india-rubber cloth, which must possess the requisite degree of smoothness, so that the fine particles of slime may not adhere to it, and should be light colour, so that the dark streaks of ore may be clearly distinguished. The cloth should be applied to the table when warm, so that it may be well stretched under ordinary temperature. When stretched and nailed upon the table, the edges of the cloth are covered with narrow strips of leather, in order to prevent tearing, and at the upper end it is covered with a strip of zinc, 10 or 12 in. wide, upon which the water and solid material fall from the distributing boards, passing thence quietly on to the cloth. Such a cloth-covering is said to last over a year, and to be especially well adapted to the treament of the finest material, only the number of shocks must be increased to 120 or 150 a minute.

The sides and upper end of table surface are furnished with bordering strips of wood *h*, and a similar strip divides the surface longitudinally in the middle, thus forming a double table. The lower end of the table is also furnished with short strips *i*, which may be moved on a pivot toward one side or the other, and the upper ends of which are pointed, to assist somewhat in the division of the several classes of the material at the place of discharge. These pointed strips may also be fixed in any desired position by driving wooden wedges between them and a transverse piece of wood that crosses the table near the lower end, and is supported above it by resting on the upper edges of the side and partition strips *h*, to which it is nailed.

The lower end of the table is pierced with slits or apertures *j* and *k*, Fig. 6064, through which the material may be discharged from the table before reaching the lower edge, falling thus into troughs, which conduct the different assortments to their appropriate places. The outer of these troughs, *l*, receives the clean ore from the lower edge of the table; the second, *l'*, receives the middlings through the aperture *k*; and the inner, *l''*, receives the waste stuff through the aperture *j*.

Another arrangement for the disposition of the assorted material, without the use of apertures, is shown in Fig. 6063, in which the poor stuff or gangue is discharged over the edge of the table into the launder *l''*; the other two classes fall into the box *m*, which is divided into two parts, opening in opposite directions, that part which is under the discharging point of the clean ore opening to the right and delivering the stuff into the launder *l*, the other part receiving the middlings and delivering into the launder *l'*. The table is suspended in an upright framework by iron rods, the length of which may be somewhat increased or diminished by means of the screw near the point of support. The percussion timber *p* forms a part of the frame of the table. One end of it rests against the timber *e*, being strongly pressed in that direction by the spring *d*, which is attached to the other end. Motion is communicated to the timber *p*, and thus to the table, by rods *n*, which connect it with the perpendicular rod *o*, against which the cams *c* strike. The rods *n* are attached to *p* by means of a nut *q*, Fig. 6061, which moves on a screw, and may be adjusted for the purpose of shortening or lengthening the stroke by turning the head *r*. When the cam *c* presses against the block at *o*, it moves the table in a lateral direction, compressing the spring *d*, which, as soon as the pressure of the cam is relieved, throws the table back against the timber *e*, producing the shock, the force of which is regulated by a screw *s* applied to the middle of the spring, and entering the framework above the table. The force of the stroke is increased by screwing the spring up closer to the frame, or diminished by withdrawing the screw.

In another arrangement, motion is imparted to the table in a somewhat different manner, the cam acting directly upon the frame instead of by the means shown in Fig. 6062, thus drawing the table to one side, and then releasing it for the movement in the opposite direction. To effect this, the end of the percussion timber *p* nearest the cam is furnished with two stout iron plates, one attached to each side of the timber and extending toward the cam; the two plates are connected at their other ends by a cast-iron piece which fills the space between them, and the inner surface of

which is curved, so as to correspond to the curve of the cam. The latter revolves between the two plates, in the reverse direction from that indicated in Fig. 6062, and, striking against the cast-iron piece, draws the table to one side. When the table is released by the cam, it is drawn to the opposite side by the action of a spring, which, as in the case already described, is of wood, but is placed horizontally, the two ends being fixed, and the middle attached to the end of the percussion timber. When thus drawn forward the end of the percussion timber strikes against a buffer, which is firmly secured in an iron bed-plate that is screwed down to an underlying timber; and as the sharpness of the shock—an important condition for effective work—depends upon the firm position of this timber, the latter is made long enough to extend entirely under the table to the opposite side, and is fixed by holding-down bolts to a solid foundation of masonry. The timber is connected with and braced by other timbers that are so laid in the masonry as to distribute the shock as evenly as possible to the entire mass of the latter. The opposite end of the timber may serve as the foundation for the supports of the cam-shaft, one end of which is furnished with a driving pulley, and the other end with a 400-lb. to 600-lb. fly-wheel 3 ft. in diameter.

The movement of the table is guided by two uprights, one on each side of the percussion timber. The buffer is adjustable, and by advancing or retiring it the length of the stroke may be regulated.

The distributing board t is divided into four parts, or aprons, for each single table; each of the aprons is provided with a group of distributing points. The material for concentration is supplied from a trough u, and enters the table by the apron t'. Clear water, of which a supply is kept in the box w, the surplus flowing off through w', is furnished thence through separate cocks to the aprons t^2, t^3, and t^4, and thus distributed evenly over the table. In the manipulation of this table, the following conditions are important;—The surface of the table must be made as smooth as possible. The width of the apron, from which the material for concentration is supplied to the table, should not exceed 8 or 12 in., clear water being distributed over the remainder. If a very clean product is desired, the width of the washing surface may be increased to 4 ft., making a total width of 5 ft.; or, maintaining a total width of 4 ft., the distributing surface of the slimes may be reduced to a width of 8 or 9 in. The inclination of the table must be adapted to the character of the material to be treated; it should be about 6° for sands, and 3° for fine slimes. The supply of stuff to be treated should not exceed $\frac{2}{10}$ of 1 cub. ft., containing 15 lbs. of sands a foot, or $\frac{1}{10}$ of 1 cub. ft., containing 6 lbs. of slimes a foot. According to this, a double table will treat in twenty-four hours 4·640 tons of sands, or 0·864 ton of slimes. The amount of clear water required is about the same quantity a foot of distributing breadth as that which brings the ore upon the table; so that if the breadth of the ore-distributing surface is 1 ft., and that of the water-distributing surface is 3 ft., the quantity required for one table will be, for sands, $\frac{6}{10}$ of 1 cub. ft. a minute, and for slimes $\frac{36}{100}$ of 1 cub. ft. a minute. The quantity of clear water must be increased as the inclination of the table is decreased. The outer edge of the table, that is, the side opposite that on which the ore enters, should have a little more water than the rest of the surface, in order to carry off the heavier material that reaches that side. The number of strokes in a minute is, for sands, 70 to 80; for slimes, 90 to 100. The length of each stroke depends upon the tension of the spring d, by which the table is pressed against the block e. The spring has a length of 11 ft., a breadth of 3 in., and a thickness of 2 to 2½ in. If the spring has a tension of 180 or 200 lbs., the length of stroke should be, for sands, 2½ in., and for slimes ½ to ¾ of an inch.

Under too strong tension of the spring the table makes its return movement too speedily for the desired action of the particles; the result is that they move in the reverse direction. The operation of the table demands great uniformity in treatment, especially as regards the number of blows and the quantity of water and of material. When the stream carrying the material upon the table contains less sand or slime to the cubic foot than the maximum above given, the tension of the spring should be relieved and the inclination of the table diminished. Under ordinary conditions the average performance of a double table is from 2 to 4 tons in twenty-four hours, with a consumption of water of 1000 or 1500 cub. ft. One table requires ¼ horse-power.

See AMALGAMATING PAN. BATTERY. BUDDLE. And articles on the various metals.

OSCILLATION. FR., *Oscillation;* GER., *Schwingung;* ITAL., *Oscillazione;* SPAN., *Oscilacion.*

Centre of Oscillation.—The time of a pendulum's vibration increases with its length, being always proportioned to the square root of its length. This is strictly true only of the simple pendulum, in which the pendulous body is supposed to have no determinate magnitude, and to be connected with the point of suspension by an inflexible wire without weight. If, however, the vibrating body has a determinate magnitude, then the time of vibration will vary, not with the square root of its length, but with the square root of the distance from the axis of suspension of a point in the body called its centre of oscillation.

If each part of the vibrating body were separately connected with the axis of suspension by a fine thread, and entirely disconnected from the rest of the body, it would form an independent simple pendulum, and oscillate as such, the time of each vibration being as the square root of the length of its thread. It follows that those particles of the body which are nearest to the axis of suspension would, as simple pendulums, vibrate more rapidly than those more remote. Being connected, however, as parts of the solid body, they vibrate all in the same time. But this connection does not affect their tendencies to vibrate as simple pendulums, and the motion of the body which they compose is a compromise of these tendencies of its particles. Those nearest the axis are retarded by the more remote, while the more remote are urged on by the nearer. Among these particles there is always one to be found in which the accelerating and retarding effects of the rest are mutually neutralized, and which vibrates in the same time as it would if it were unconnected with the other parts of the body, and simply connected by a fine thread to the axis of suspension. The point in the body occupied by this particle is its centre of oscillation. By this centre of oscillation the calculations respecting the vibration of a solid body are rendered as simple as those of a molecule of inconsiderable magnitude. All the properties which belong to a simple pendulum may

be transferred to a vibrating body of any magnitude and figure, by considering it as equivalent to a single particle of matter vibrating at its centre of oscillation.

The determination of the position of the centre of oscillation of a body usually requires the aid of the calculus. It is always farther from the axis of suspension than the centre of gravity is, and always in the line joining the centre of gravity and the point of suspension, when the body is suspended from a point. The rule for finding it in such a case is; if S be the point of suspension, and O the centre of oscillation, $S O = \frac{\Sigma (m d^2)}{M S g}$; or it is the quotient obtained by dividing the moment of inertia of the body by the product of its mass into the distance of its centre of gravity from the point of suspension.

The centre of oscillation of a straight line or a cylinder suspended at one end, will be distant from that end by two-thirds of its length, while the centre of gravity is distant one-half of its length. The distance in an isosceles triangle of the point of suspension, the vertex, and the centre of oscillation will be three-fourths of the length of the perpendicular from the vertex upon the base. The distance of the centre of gravity from that point will be two-thirds of the length of that line.

OVENS. Fr., *Fours;* Ger., *Ofen;* Ital., *Forno;* Span., *Hornos.*

Coke Ovens.—Figs. 6067 to 6069 are longitudinal and transverse sections of the ovens invented by

6067.

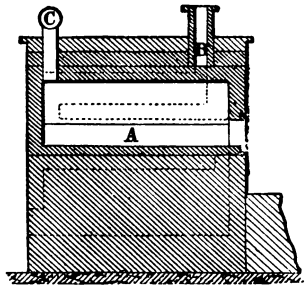

6068.

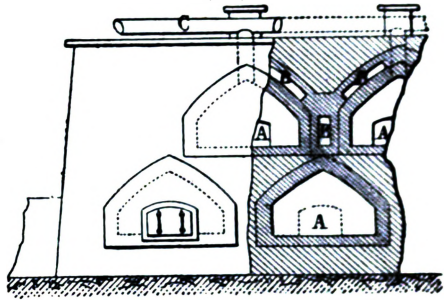

Section of Upper Ovens.

Lord Dundonald to prevent waste of small coal and the gaseous products of coal. The ovens A are built in two tiers, the one over the other; the flame from the lower ovens is carried by flues B around the outside of the upper ovens, and keeps them always at a red heat; the upper ovens are charged with small coal and closely luted, thus forming a series of retorts, in which the volatile products of the coal are distilled and pass off through the pipe C; the tar and ammonia are condensed, and the gas is used for lighting the works.

6069.

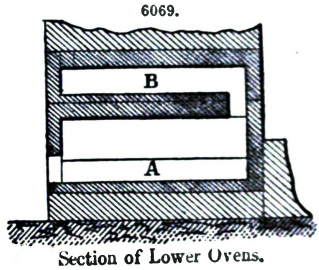

Section of Lower Ovens.

When small coal of bituminous quality is placed upon a coke hearth and the heap built upon it, it is coked by radiated heat from the heap; in this manner large quantities of small coal are still coked at some iron-works. This fact being observed would lead to the construction of ovens, where the arch over the coal being kept at a red heat answers the purpose of the coke heap. The small coal of Yorkshire and the North of England being of a bituminous character and well adapted for coking, ovens of various shapes were erected for the purpose;

6070.

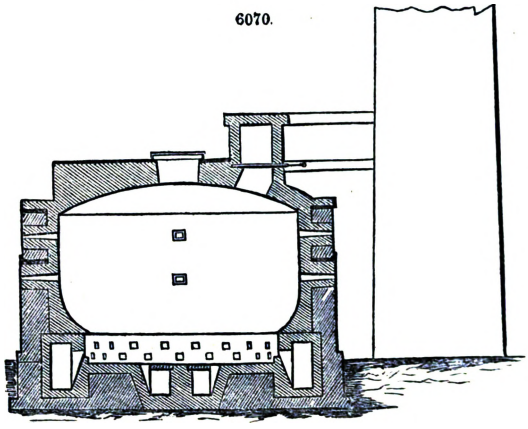

6071.

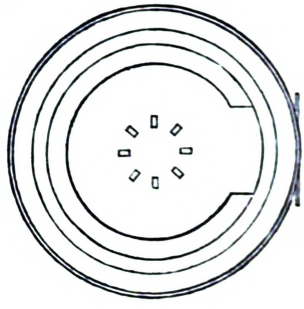

hemispherical ovens, however, are the favourite shape in the north. Fig. 6070 is a vertical section of one of the hemispherical ovens, and Fig. 6071 a sectional plan.

The great demand for superior coke, consequent on the development of the railway system, has

led to attempts at improvement in every direction; the leading object in all being to keep the oven at a high temperature, that being found an essential condition for the manufacture of dense hard coke, as afterwards explained. Figs. 6072 to 6077 show the construction of one of the most approved forms of ovens for coking, some coals containing only a small quantity of bituminous matter and requiring a high temperature; in this plan the waste gases are burnt in the flues, and thus made use of to increase the temperature of the ovens.

Speaking of coke for smelting purposes, I. Lothian Bell stated before the Institute of Mechanical Engineers, that in a coke oven the expulsion of the volatile constituents of the coal is effected by their own combustion, which is not the case when the coal is charged raw into the blast furnace. Hence if a form of coke oven were employed in which there was no loss of fixed carbon in the process of coking, the actual consumption of coal a ton of iron would be smaller when the coke was made in an oven than when the operation was performed in the furnace itself, because in the former case the gases themselves furnish the necessary heat, while in the latter a certain quantity of the coke itself has to be burnt for the purpose. Unfortunately, it is difficult to get rid of the gaseous constituents of the coal in coke ovens without at the same time losing a portion of the solid carbon also; nor is this to be wondered at, when the nature of the ordinary coke ovens is considered. In these the coal is exposed to a very high temperature for periods varying from seventy-two to ninety-six hours; and although air is

6072.

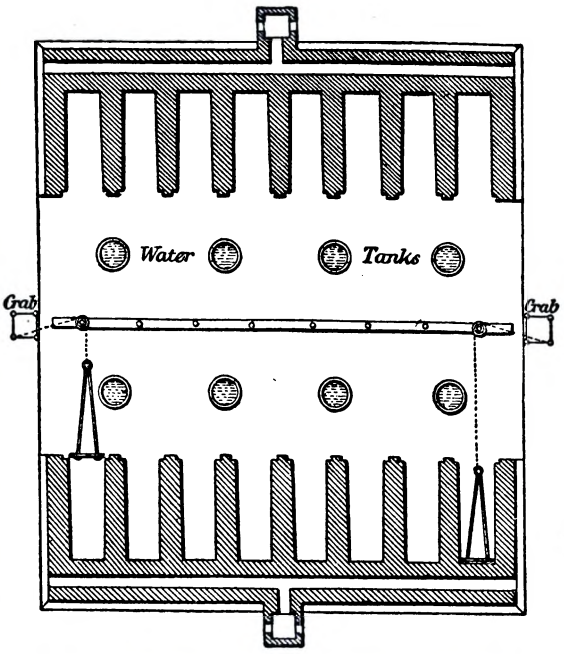

6073.

6074.

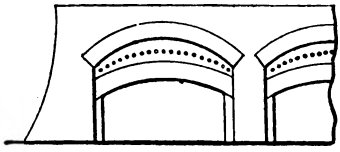

6075.

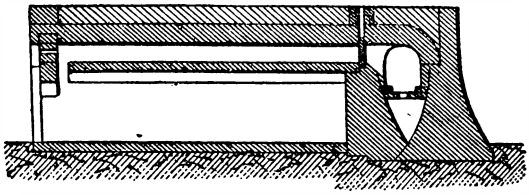

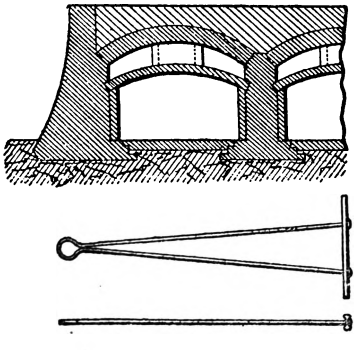

6076.

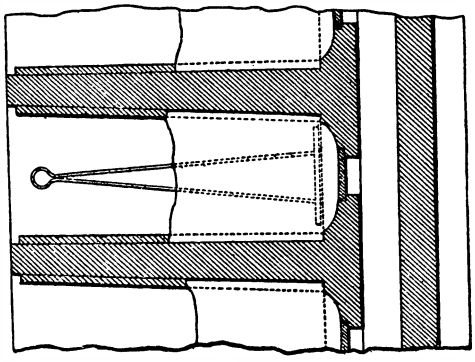

6077.

professedly admitted in such a way as to consume the gases only, and not the coke, practically this is found to be impossible; and accordingly from a coal containing 70 per cent. of fixed carbon 62 per cent. is about all the coke that is produced.

Different attempts have been made to avoid this waste of carbon in coking. In the simplest plan, which may be regarded as a palliation rather than a cure of the evil, the gases, instead of being burnt only above the coke itself in the chamber of the oven, as in the ordinary coke ovens, are conducted into flues running under the bottom and round the sides of the oven, as in that known as Breckon and Dixon's coke oven, shown in Figs. 6078 to 6081. This form of oven is more

6078. *Section at X.X*

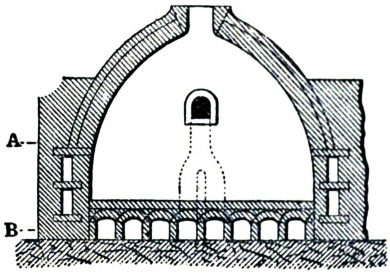

Section at Y.Y. 6079.

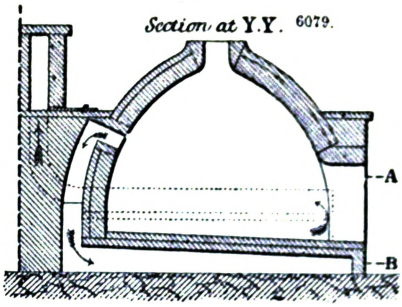

6080.

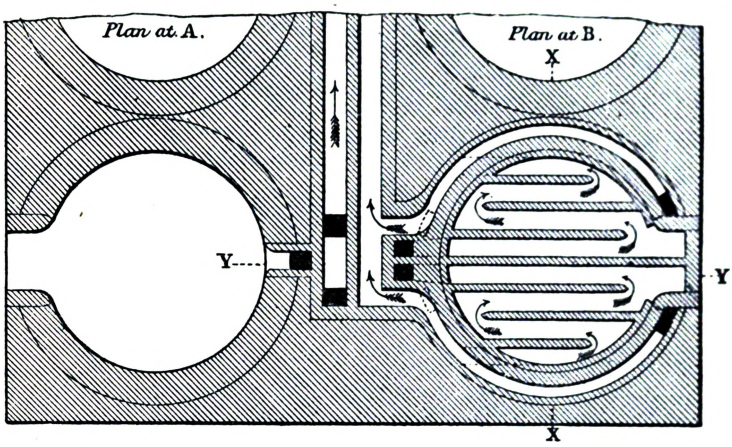

costly than the ordinary one, and more expensive to maintain in repair; but on the other hand, as the operation of coking is completed in about forty-eight hours, instead of seventy-two to ninety-six hours, as in the ordinary ovens, the shortened period of exposure affords a notable diminution in the action of the air on the coke, with a corresponding increase in the yield of coke obtained.

6081.

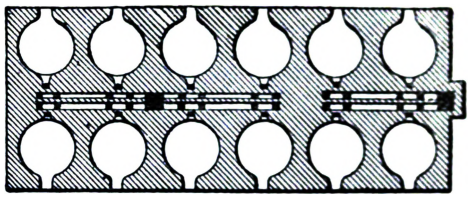

6082. *Section at X.X.*

6083. *Section at Y.Y.*

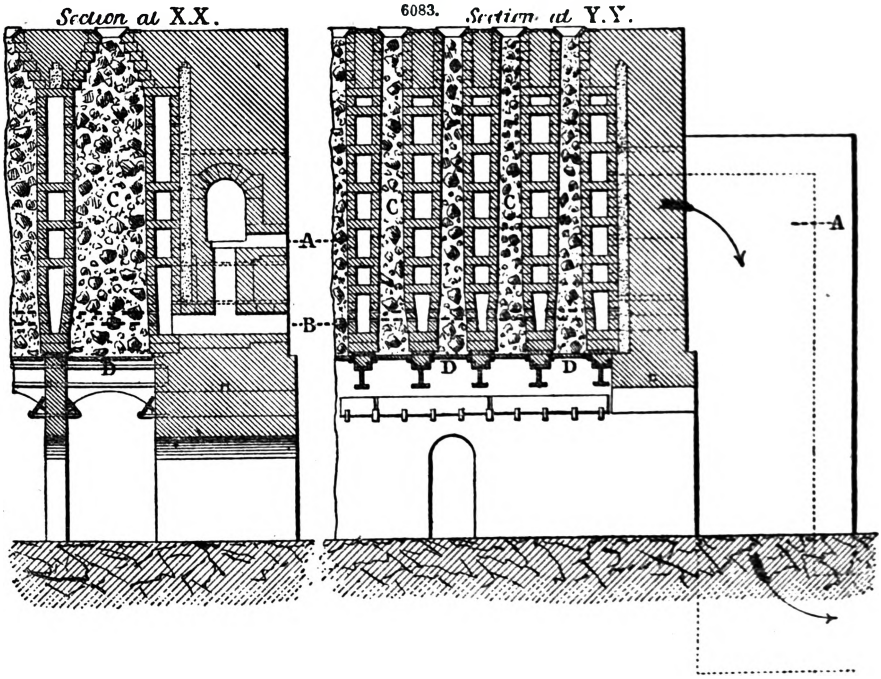

A second form of coke oven is that known as Appolt's, shown in Figs. 6082 to 6084, which consists of a series of upright rectangular chambers of brickwork C, C, generally eighteen in number,

6084.

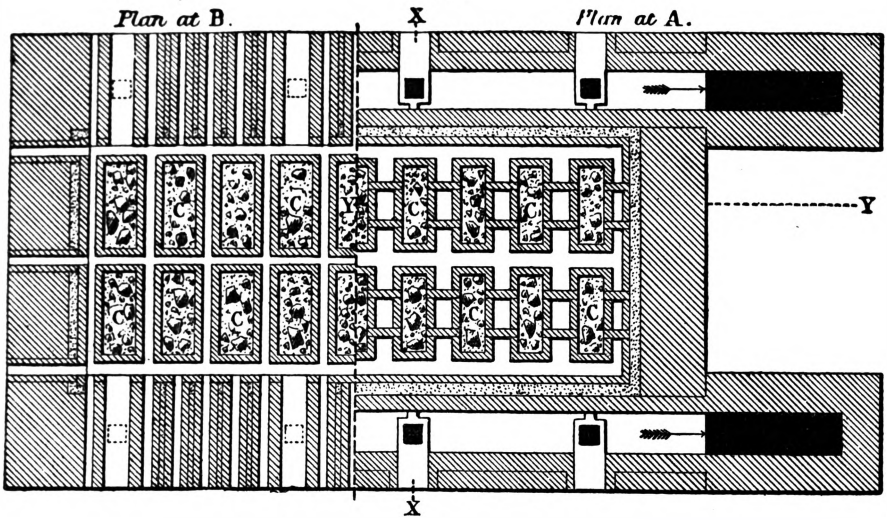

6085.

Section at XX.

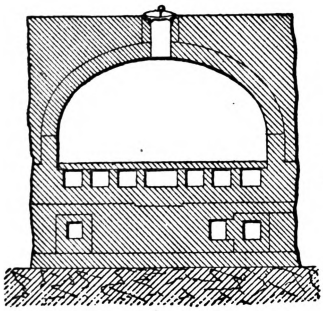

6086.

Section at Y.Y.

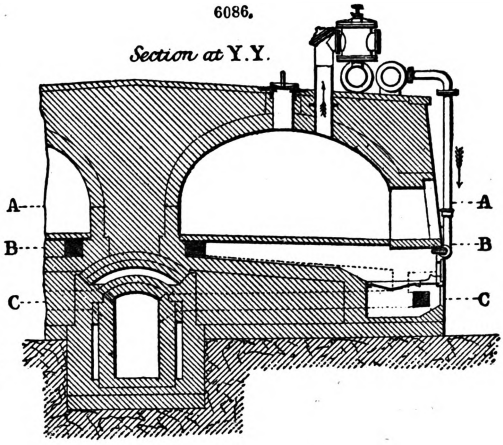

6087.

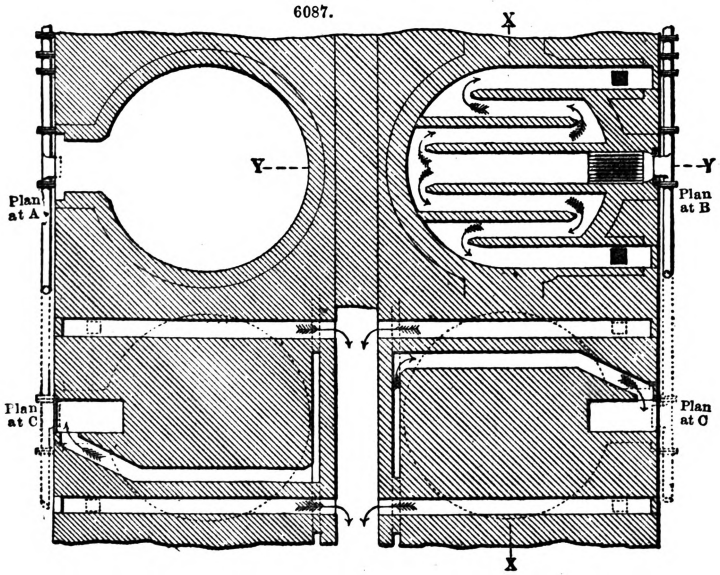

each 16 ft. high, 4 × 1½ ft. at the lower end, and 3½ × 1 ft. at the upper. These chambers or retorts are surrounded by flues, in which the gaseous hydrocarbons are burnt; and the resulting heat, being transmitted through the sides of the chambers, converts the coal into coke. By following a regular order of charging, sufficient heat is always maintained in the block of ovens for effecting the process of coking as soon as a fresh charge of coal is introduced. In this coke oven twenty-four hours are sufficient for the completion of the coking in any one of the chambers; and the bottom plate D being then removed, the charge falls out by its own weight, and is cooled with great expedition, and loss of coke is avoided by rapid cooling.

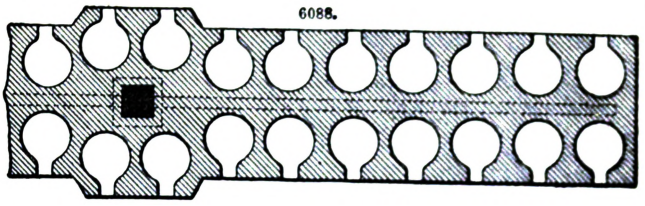
6088.

A third description of coke oven is the Knab or Pernolet oven, Figs. 6085 to 6088, in which, as in the preceding one, no combustion takes place in its interior, the gases being burnt in flues running under the bottom and along the sides. Instead, however, of the combustion being direct, as in the Appolt oven, the gases are conducted through a long pipe to a series of condensers, where the tar and ammoniacal liquors are collected; and the gas freed from these is then used as the source of heat for coking the coal.

In the last two forms of oven it will be observed that the coal is coked in what is virtually a close retort; and hence from these ovens a yield is obtained equal to the entire quantity of fixed carbon contained in the coal. There is little doubt, says Bell, that even after adding the extra cost of construction, wear and tear, and greater amount of labour in carrying on the operation of coking in these two ovens, the increase in the yield of coke—considered as so much combustible matter—offers sufficient inducement to have recourse to these more perfect forms of oven; and although my experience with the tar and ammonia condensation connected with the Pernolet oven was not altogether satisfactory, the results obtained in France, where the process was first established, are such as would have encouraged the continuance of the plan in this country, instead of returning, as has always hitherto been the case, to the old simple form of oven, entailing extra waste. As regards the quality of the coke produced, however, notwithstanding the difficulty of making an accurate comparison between two different kinds of fuel employed in blast furnaces, the general experience is largely in favour of coke made in the ordinary ovens without flues; and it is equivalent to something like the extra yield of coke obtained from the three forms of flued coke ovens just described. See KILN.

OVERSHOT WATER-WHEEL. FR., *Roue hydraulique en dessus;* GER., *Oberschlächtiges Wasserrad;* ITAL., *Ruota a cassette di sopra;* SPAN., *Rueda de cajones.*

There is a want of uniformity among practical men in the application of distinctive appellations to the several kinds of water-wheels that often leads to confusion and misapprehension. Some define an overshot wheel as one that receives its water over the crown, and that consequently turns against the tail-water. According to this definition, a wheel that receives its water from a sluice situate below the crown, and hence revolves in the contrary direction, is a breast-wheel; and as this wheel may take the water at a point situate above or below the horizontal plane passing through the axis of the wheel, it is necessary to subdivide this kind into high and low breast. Others define an overshot wheel as one that receives its water at a point situate between the crown and the horizontal plane passing through the axis, and that consequently may turn either with or against the tail-water; and a breast-wheel as one that receives its water below this plane. This definition confounds the high breast and the overshot of the former definition, and necessitates the subdivisions of forward and back overshot wheels, according as the water is carried over the crown or delivered short of that point. It matters but little which of these divisions is adopted, provided it is clearly understood. The latter, it may be remarked, is the more common on the Continent, the former in this country; consequently we shall adopt the former; but to render our treatment of the subject more generally acceptable, we shall discuss the high breast under the present heading of Overshot Wheel.

The water of a stream is set in motion by the action of gravity, and consequently the motion is constantly accelerated until the resistance from friction and other sources becomes equal to the accelerating force. When this point is reached, the motion becomes uniform. To utilize the *vis viva* of the water in this state, wheels are designed, having either straight or curved floats which dip into the stream, and upon these floats or paddles the water impinges. The greatest proportion of the power of the stream that this kind of wheel is capable of utilizing is, as we have previously shown, from ·35 to ·40. If a sudden change of level occur in the bed of the stream, the water passes from one level to the other without being subjected to the retarding influence of the friction developed in the former case. Hence a greater available force is generated; and as, moreover, the whole of the mass of water can in this case be brought upon the wheel, an impossibility, as we have shown, in the case of the float-wheel, a much larger proportion of the power of the stream may be utilized. This proportion is greater in the ratio of 2 to 1; hence it follows that a fall offers the most favourable means of turning to useful account the force generated by a stream of water. But to render this force available by means of a wheel acted upon by gravity alone, the fall must not be less than 6 ft., nor should it exceed 40 ft., for above that height the construction and maintenance of a wheel become troublesome and costly. The wheel destined to utilize the power of a fall is provided with buckets instead of floats, which receive the water at the top of the fall and carry it down to the bottom, or as near these points as possible. For as only the gravity of the water is employed in this case, it is obvious that the force developed upon the wheel will increase as the vertical distance traversed by the loaded buckets. These buckets are of various forms, but

they are all designed with a view to retain the descending water as long as possible. When of wood, they usually consist of two parts; the first, which forms the bottom of the bucket, is radial to the wheel and is called the start; the second, forming the front of the bucket, is set at an obtuse angle to the start. When made of iron, they are composed of one piece, and are curved in the form of a portion of a circle, a cycloid, an epicycloid, or an Archimedian spiral, these forms being the best adapted for the retention of the water. The ends of these buckets are let into, and therefore closed by, the rims of the wheel, called the shrouding, and the back is formed by boards, also fixed to the shrouding, called sole-boards. The shrouding is fixed upon the segments carried by the arms of the wheel. When the power is taken from the shaft or axle of the wheel, these arms must be very strong, and they must be fixed upon the shaft in a manner that will not weaken the latter. Consequently in such a case the wheel is heavy, and absorbs a considerable proportion of the motive force. When, however, the power is taken from the periphery, often an inconvenient mode, the arms and axle may be of much smaller dimensions, as the strain of torsion is taken off the latter altogether. Such wheels are called suspension or spider wheels. Wood is the material most frequently employed in the construction of water-wheels, but recently wheels have been constructed wholly of iron. The latter material is the most suitable for the buckets, as it is favourable to the adoption of the curved form.

The whole fall of a water-course is the height of the surface of the water in the upper, above that of the water in the lower race, that is, the vertical distance passed through by the water in changing its level. And the power of the stream is the product of this height by the quantity of water discharged a minute. Thus, if a represent this quantity in cubic feet, and H the whole fall in feet also, the power P of the fall is Q H. To represent this as horse-power, multiply Q H by ·001892, and denoting the horse-power by N, we have $Q = \frac{528 \cdot 5\,N}{H}$. But the whole of the fall cannot be utilized. It is impossible either to take the water at the highest point, or to carry it down to the lowest; hence a portion of the fall is lost, and this portion must be subtracted from H, the whole fall, in order to obtain the effective fall h, or the available force of the fall. To determine the effective fall, let h', Fig. 6089, denote the level of the water in the upper race, and h'' that of the water in the tail-race; $h'\,h''$ then equals H, or the whole fall. Also, let a represent the point at which the water strikes the wheel, and a' the mean point of discharge. The height $h'\,a$ is requisite to give the water a velocity equal to that of the wheel, a necessary condition. And it is evident that this portion of the fall exerts no force upon the wheel, since the whole of the force generated by it is expended in producing the required velocity. The height $h'\,a$ is therefore ineffective. As the water leaves the wheel at the point a' the height $a'\,h''$ is wholly lost, and this height must be added to $h'\,a$ as non-effective. The water is on the wheel throughout the whole of the height $a\,a'$; consequently the whole of this height is effective. Hence the effective fall is $H - (h'\,a + a'\,h'') = a\,a'$. But $a\,a'$ is that portion of the wheel that is loaded with water; the effective fall is therefore equal in all cases to the height of the loaded arc, that is, the vertical distance from the horizontal plane passing through its lower extremity to its upper extremity.

6089.

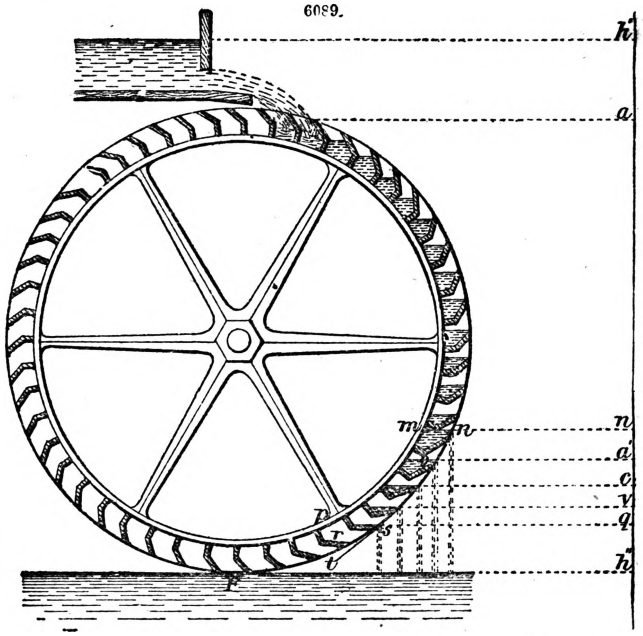

The portion of the fall $h'\,a$ is employed, as we have stated above, to produce the force necessary to impart a sufficient velocity to the water; but the portion $a'\,h''$ is sheer loss, and the efforts of inventors and constructors have been directed to the reduction of this height. When the wheel is overshot, its lowest point must be clear of the water in the tail-race, because, as the wheel moves in a direction contrary to that of the tail-water, a portion of the latter would be lifted by the buckets if they dipped into it. It frequently happens that the level of the water in the tail-race is subject to considerable variation, and in such cases the wheel must be clear of the highest level. Hence the height $a'\,h''$ is always considerable in an overshot wheel. When the wheel is a high-breast it turns with the tail-water, and the buckets may dip to a considerable distance without an appreciable loss of power, provided sufficient ventilation is afforded to prevent their sucking the water. A breast-wheel therefore utilizes a larger portion of the fall than an overshot. Moreover, as the diameter of a breast-wheel may exceed the height of the fall, its *vis viva* enables it to overcome the obstruction of the back-water better than a wheel of a smaller diameter, and it may receive the water at that point where the velocity of the latter has become equal to that of the wheel, which is not always practicable with an overshot. This latter quality will therefore in

some cases reduce the height $h'\,a$, or, rather, preserve this height from being exceeded. Thus a portion of the height $a'\,h''$ is due to the nature of the wheel employed. But the greater part of this loss is occasioned by the discharge of the water from the buckets before they have reached their lowest position, and is therefore due to the form of the buckets and the action of centrifugal force. In considering the influence of the form of the buckets, it is necessary to bear in mind that there are two conditions to be fulfilled, to a certain degree incompatible with each other. These conditions are to afford a ready entrance to the water, and to retain it as long as possible. The latter condition requires that the front of the bucket shall be of such dimensions and form that the water may flow up it, as the bucket descends, to a considerable height before reaching the edge. But such an arrangement is not favourable to the ready introduction of the water; hence a certain degree of compromise must be allowed between these conflicting conditions, with its inevitable consequence, a loss of fall. The degree of compromise necessary is, however, frequently much exaggerated, especially in the case of wooden buckets. A two-part bucket is so much more easily made and repaired than a three-part, and certain angles are so much more readily found and set than others, that in most cases a great deal is sacrificed to what may be called convenience of construction. In the case of iron wheels, these conditions have less influence, because the material lending itself readily to the curved form, that which is most suitable for the buckets is easily obtained. If more care and skill, however, were shown in laying on the water, the ordinary two-part wooden bucket might be, with little additional trouble, constructed to carry its load down to that point where its action ceases to be of much value.

The loss $a'\,h''$ is, as stated above, due to the form of the buckets and to the action of centrifugal force. As it is important to know what proportion is due to each of these influences, we shall determine them separately. Leaving therefore centrifugal force out of consideration, the surface of the water in the buckets is horizontal. As the buckets descend in consequence of the revolution of the wheel, this surface approaches the edge of the front of the bucket, until it occupies the position $m\,n$. From this position to that marked P q, the water flows over the edge of the bucket. The arc F n, which measures the distance from the bottom of the wheel to the point at which the water begins to flow over, may be called the arc of first discharge, and F q the distance from the bottom to the point at which the discharge ceases, the arc of complete discharge. The latter is equal to the angle $r\,s\,t$, which the front of the bucket makes with the tangent to the circumference, which angle is, of course, known from the inclination adopted by the designer. The former is equal to the angle $r\,s\,t + m\,o\,n$, the angle which the front of the bucket makes with the surface of the water at the beginning of the discharge. Whatever the proportions of these arcs may be, we may always admit a mean arc of discharge; in other words, between q and n there is a point at which the whole of the water may be discharged at once, with the same effect to the wheel as is produced by the gradual discharge between n and q. No sensible error will be committed by taking this point as the arithmetical mean; that is, the mean arc of discharge will be F c, c being situate at an equal distance from n and q. The loss due to the form of the bucket is therefore $h''\,c$. But $h''\,c$ = the versed sine of the mean arc F c, the radius of which is the semi-diameter of the wheel. Therefore, representing the diameter by D, the angle $r\,s\,t$ by y, and the angle $m\,o\,n$ by z, we have $h''\,c = \frac{\mathrm{D}}{l}\left\{-\cos.\left(y + \frac{z}{2}\right)\right\}$. The angle z evidently depends on the volume of water received by the buckets, as well as on their form and dimensions.

We have now to determine the loss of fall due to the action of centrifugal force. The water in the buckets of a wheel is acted upon by two forces—gravity, which acts in a vertical direction, and centrifugal force, which acts in a direction normal to that of gravity. The force impressed upon the water will therefore be the resultant of these two forces, and the direction of this resultant will be inclined to the vertical; and as the surface of a fluid is always normal to the force acting upon it, the surface of the water in the buckets will not be horizontal. Hence it follows that this surface will reach the edge of the bucket at a point in the fall above that at which it would rise to that level in consequence of the form of the buckets alone, and consequently the discharge will begin earlier; also, the surface of the water will sooner become parallel with the front of the bucket, and therefore the discharge will be completed at a higher point. The mean point of discharge will thus be situate at a greater height from the bottom than in the preceding case, namely, at a' instead of c, and the portion of the height $h''\,a'$, due to the action of centrifugal force, is $c\,a'$. The surface of the water in the buckets is slightly cylindrical, in virtue of the two forces acting upon it, and it is necessary to know the centre of curvature in order to be able to determine the position of the point a'. In a former article, on Angular Velocity, Fig. 210, it was shown how this centre may be determined graphically when the relative values of the two forces are known, and it was also shown that this radius $= \frac{g}{\omega^2}$, ω being the angular velocity of the wheel. This value of r furnishes us with a ready means of determining the centre of curvature. Representing the number of revolutions a minute by n, we have $\omega = n\,\frac{\pi}{30}$; therefore $\omega^2 = n^2\,\frac{\pi^2}{900} = n^2 \cdot 010965$. Consequently

$$r = \frac{g}{n^2 \cdot 010965} = \frac{32 \cdot 22 \div \cdot 010965}{n^2} = \frac{2938}{n^2}.$$

Hence, to find the vertical height of the centre of curvature above the centre of the wheel, we get the following practical rule;—

Divide 2938 by the square of the number of revolutions a minute; the quotient will be the height sought, in feet.

Example 1.—To find the centre of curvature of the surface of the water in the buckets of a wheel making six revolutions a minute. The square of 6 is 36, and $\frac{2938}{36} = 81 \cdot 6$ ft. The centre is therefore situate in the vertical plane passing through the axis of the wheel, and at a distance of 81 6 ft.

above this axis. This example shows that, in the case of ordinary velocities, the surface of the water in the buckets may be considered as plane and normal to the line drawn from the centre of curvature to the middle of that surface.

Example 2.—To find the centre of curvature when the wheel makes twelve revolutions a minute. The square of 12 is 144, and $\frac{2938}{144} = 20{\cdot}4$ ft. Thus, in this case, the centre may be near the circumference of the wheel, and consequently the surface of the water cannot, without sensible error, be considered plane.

Having determined the centre of curvature, draw from this centre O', Fig. 6090, to each bucket, at the point situate midway between the inner and the outer circumference, the straight lines O'*a*, O'*b*, O'*c*, and so on. Draw normals to these lines, passing through the end or lip of the buckets. The capacity of the buckets below these lines will then represent the quantity of water they will carry without spilling. When this quantity is equal to that received by the bucket, the point of first discharge will have been reached, because immediately after passing this point the water will flow over. From this point *f* the discharge continues until the normal coincides with the front of the bucket, as at *k*, when the whole of the water will pass out. The portion of the circumference *f k* is therefore the arc of discharge, and $\frac{f\,k}{2}$ that is, the middle of the arc *f k*, is the mean point of discharge, or limit of the effective fall. The point *k* is determined by the coincidence of the normal to the radius of curvature with the fore part of the bucket. To determine *f*, it is necessary to calculate the cubical contents of the bucket, and to compare it with the capacity of the latter below the normal. When the centre of curvature is near the circumference of the wheel, that is, when the velocity of the wheel is great, instead of straight lines, arcs must be described from this centre, passing through the edge of the buckets, as in the former case, and the capacity calculated for this curved surface.

6090.

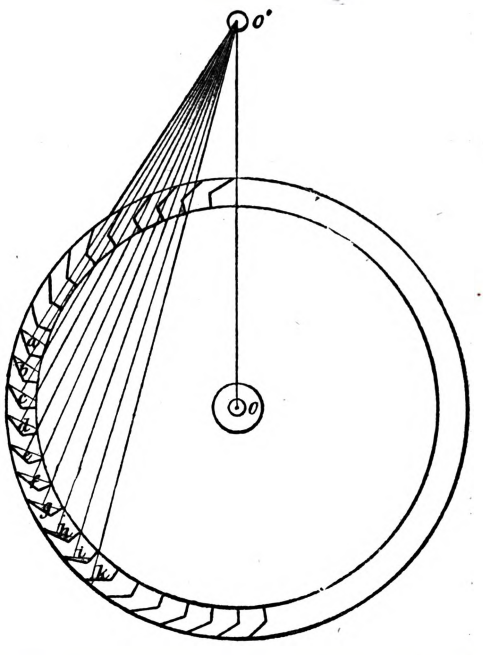

It is manifest from the foregoing considerations that the lower limit of the loaded arc depends, first, upon the form of the buckets, and, second, upon the velocity of the wheel. Hence, as this velocity is diminished, the arc, and consequently the effective fall, is increased. We have shown, however, that in the case of a wheel making six revolutions a minute, the centre of curvature is situate at a great vertical distance above the axis of the wheel; the arc will therefore increase very slowly as we diminish the velocity below this rate; in other words, the loss of effective fall due to the action of centrifugal force is very little in a wheel making less than six revolutions a minute.

It has been shown, too, that a volume of water acting by its gravity exerts twice the force of the same volume of water when acting by its impulse. Hence it will be advantageous to increase the height of the loaded arc at the expense of that portion of the fall situate above the first-loaded bucket, that is, to take the water as near the top of the fall as possible. But it is evident that if the circumference of the wheel possesses a velocity greater than that of the water, the latter can exert no force upon the wheel until it has descended through a sufficient space to acquire a velocity at least equal to that of the wheel. Moreover, the buckets will strike against the water, some of which will be dashed over and lost, and the wheel will be retarded thereby. There will be no advantage, therefore, in diminishing the height *h' a* below what is requisite to give the water a velocity equal to that of the wheel. Hence it follows again that the height of the loaded arc will increase as the velocity is diminished; therefore, from the above considerations, it is manifest that the lower the velocity of the wheel, the greater will be the proportion of the force utilized by the wheel to the whole force of the fall. From this fact Smeaton deduced a rule which he laid down as inviolable, and which, until very recently, has been strictly adhered to by makers, namely, that the velocity of the circumference of a water-wheel should be reduced to the lowest practical limit. It is not possible in practice to deliver the water upon the wheel at the top of the fall; *h' a* must therefore of necessity have some value, and this value will be at least sufficient to bring the water upon the wheel with a velocity of 3·5 ft. a second. This velocity is consequently the lowest practical limit, and is the one adopted by Smeaton. This rule has been generally followed by millwrights, who have designed the motor wheel to revolve with a velocity of 3½ ft. at the circumference, and then introduced gear work between the wheel and the machine to bring the speed of the latter up to the required rate. We cannot but regard this practice, however, as altogether wrong if followed out strictly. We have seen that a wheel making six revolutions a minute loses only a small portion of the fall from the action of centrifugal force when the diameter of the wheel is not great. Suppose a wheel 22 ft. in diameter. If it has a velocity at the circumference of 3½ ft. a second, it will make about three revolutions a minute, and with double this velocity, it will make six revolutions a minute. The loss of fall from the action of centrifugal force due to the greater angular

velocity will be represented by $\frac{g}{\omega^2} - \frac{g}{4\,\omega^2}$, the value of which will not be great. To bring the water upon the wheel with the increased velocity, an additional head of 9 in. will be required. This will be the loss of fall above the wheel, due to the greater velocity. Representing the value of $\frac{g}{\omega^2} - \frac{g}{4\,\omega^2}$ in feet of fall by m, and the additional head, also in feet, by n, we have the total loss of fall due to the greater velocity $= m + n$, the value of which in the above case may be taken approximately as $1\frac{3}{4}$ ft.

Now, what is the gain to set off against this loss? In the first place, the *vis viva* of the faster wheel will ensure in every case greater steadiness and regularity of motion, and this is an important advantage. But if the greater velocity will remove the necessity for intermediate gear-work, the balance will certainly be on the side of the greater velocity; for the proportion of the motive force absorbed by gearing of all kinds is enormous—a fact too often lost sight of by those who design machines. To determine the velocity of a water-wheel, therefore, it will be necessary to take into consideration the particular conditions under which it has to work, the nature of the machinery it is required to drive, and the kind of work the machinery has to perform; so that the velocity will depend almost entirely upon circumstances unconnected with the wheel itself. There are, however, limits beyond which it is well not to go.

Our investigation of the influence of centrifugal force showed that above six revolutions a minute the value of m increases rapidly, and as n increases as the square of the velocity, that is, in a like proportion, the value of $m + n$ would become sufficiently great to occasion a serious loss of fall, or $\frac{m+n}{\mathrm{H}}$ approaches too nearly in value $\frac{\mathrm{H}}{\mathrm{H}}$. The extreme limit to the velocity of the circumference may be fixed at 10 or 11 ft. a second. It is equally clear that we cannot descend below Smeaton's velocity of $3\frac{1}{2}$ ft. a second without loss, since our investigations have also shown that a wheel moving with this velocity exerts the greatest possible effect, or rather utilizes the largest possible proportion of the total force H Q of the fall; for, as we have seen, it by no means follows that a wheel in those conditions transmits the greatest possible effect to the machine, a large proportion being frequently absorbed by the intermediate gear-work. We may therefore lay down, as a rule, that the velocity of the circumference of a water-wheel may not be less than 3·25 ft. a second, nor greater than the square of 3·25 ft., and that within these limits the velocity must be determined according to the nature of the work to be performed.

We have seen that the water must arrive upon the wheel with a velocity equal to that of the circumference; therefore, when the velocity of the latter has been determined, we have next to consider what portion of the fall is required to produce this velocity. Theoretically, the velocity due to the head of water is expressed by $\mathrm{V} = \sqrt{2\,g\,\mathrm{H}}$; but the contraction at the orifice and friction will modify V considerably. Moreover, in the case of a forward overshot, the water flows upon the wheel from a wheel-race, and falls freely through the distance from this race to the wheel. Consequently the falling water describes a parabola; and as the extent of this curve depends upon the velocity, it cannot be determined until the velocity is known. But the free entrance of the water into the buckets will depend, in a great measure, upon the proper directing of this curve; and hence it becomes necessary to determine the exact point at which the water meets the wheel, as well as its exact velocity at that point. Careful attention to these matters is requisite whenever it is important to utilize as much as possible of the power of the fall; in other words, whenever it is important to economize water. The researches of Poncelet, Lesbros, and Morin, who followed in the wake of Borda and Michelotti, have furnished us with the means of solving the foregoing problems readily and accurately.

To find the Velocity of the Water upon the Wheel-race.—Though the presence of a wheel-race beyond the sluice does not influence the discharge, it diminishes the velocity of the water after it has passed the orifice. The fluid vein spreads out and the mean velocity becomes less. The following formula gives the velocity of the water after it has passed the sluice by a distance equal to twice the depth of the opening; $\mathrm{U} = \frac{\sqrt{2\,g\,\mathrm{H}}}{\sqrt{1 + \left(\frac{1}{m} - 1\right)^2}}$

In this formula u is the velocity sought, and m the coefficient of discharge for the given orifice.

The following rule will, however, be found sufficiently accurate for practical purposes.

To find the velocity at a distance from the opening equal to twice its depth, multiply the velocity due to the head by 0·85.

To find the Velocity of the Water at the edge of the Wheel-race.—A wheel-race is usually so short that the influence of friction may be neglected. If, then, we represent the velocity at the edge by u, the head due to the mean velocity at the point situate at twice the depth of the opening by H^1, and the inclination of the race, that is, the height of the lower side of the opening above the extremity of the race by h, we shall have $u = \sqrt{2\,g\,(\mathrm{H}^1 + h)}$.

To draw the Curve described by the mean Particle of the Fluid Vein, after leaving the Wheel-race.—When the velocity of the water at the end of the wheel-race is known, it is easy to trace the curve described by the mean particle of the fluid vein after it has left the race. Let u = that velocity; a = the angle of that velocity and of the wheel-race with the horizontal; x = the abscissæ of the curve measured upon a horizontal line drawn through the middle of the section where the mean velocity is u, and y = its vertical ordinates from the same origin. The following formula then gives the value of y; $y = \frac{g\,x^2}{2\,u^2 \cos.^2 a} + x \tan. a$.

By giving x values equal to 1, 2, 3, 4, &c., inches, we shall obtain the corresponding values of y, and the curve may be traced through the points thus found.

When the wheel-race is horizontal, we have $a = o$, cos. $a = 1$, tan. $a = o$, and $y = \frac{g x^2}{2 u^2}$.

In the case of an overfall, we may find the velocity of the mean particle approximatively from the formula $u = \sqrt{2 g \times 0{\cdot}6\,H}$; because the depth of the water upon the crest or sill of an overfall is only about 0·80 of the height H of the level above this same point, and therefore, the mean particle being at 0·60 of this height, its velocity will be that given by the above formula, and will be nearly in the horizontal direction. It will thus be easy, in every case, to determine the parabola described by this mean particle.

To find the Velocity of the Water on its arrival upon the Wheel.—At the point where the curve described by the mean particle meets the outer circumference of the wheel, draw a tangent to the curve; the direction of this tangent will be that of the velocity V of the water on its arrival upon the wheel. Then to the height due to the velocity u, add the height from this point of meeting to the origin of the curve. The velocity due to the sum of these heights will be the velocity V with which the water arrives upon the wheel.

We have already shown that the water should reach the circumference of the wheel with a velocity at least equal to that of the circumference. But to ensure the buckets filling properly, and, at the same time, to prevent the water from striking against the outer face of the buckets, it should possess a velocity slightly in excess of that of the circumference. This velocity may be determined in the following way;—

Having found the point c, Fig. 6091, at which the mean particle meets the circumference of the wheel when the velocity of the water at that point is equal to that of the circumference, and the direction of the velocity V at that point; from the same point, draw a tangent to the outer circumference of the wheel. Set off upon this tangent, to any scale, a length $c\,e$ to represent the velocity of the circumference. Through the point c draw the profile $a\,b\,c$ of a bucket, and from the point e, parallel to the face $b\,c$ of the bucket, draw a line to meet the direction of the velocity of the water at c. The length $c\,d$ will then represent, to the same scale, the velocity which the water should possess at the point c.

6091.

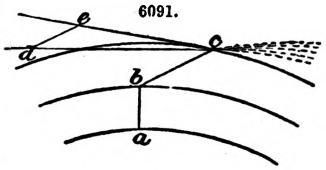

When the velocity of the wheel has been determined, the portion of the fall $h'\,a$, Fig. 6089, requisite to give the water the due velocity is thus readily found. Representing this quantity by h, we have $H - h =$ the height of the bucket into which the water is delivered, and this height will determine the diameter of the wheel. In the case of an overshot, it is obvious that the diameter can exceed the height $H - h$ by only a very small quantity, since the water has to be brought over the crown of the wheel. Instances are frequently met with in which the diameter has been made equal to this height, that is, in these cases the water is delivered upon the crown of the wheel. A greater effect, however, may be obtained by carrying the water over the crown and delivering it at about 25° below, that is, at 65° above the horizontal plane passing through the axis of the wheel, as this arrangement gives a larger diameter. The radius of the wheel, in this case, is given by the formula $R = \frac{H-h}{1 + \text{sin. } 65°} = \frac{H-h}{1{\cdot}9}$.

If the wheel is a high-breast, its diameter is likewise determined by the height $H - h$, but evidently it may considerably exceed that height or even H, because in this case the water is not carried over the top of the wheel. Practically, however, this wheel cannot be made much larger than the overshot. One of the advantages of this wheel is that the water may be applied to it at the point which gives the greatest effect; and this point is situate at 52° 33′ from the summit of the wheel, or 37° 27′ from the horizontal plane passing through the axis, because at that point we get the greatest possible height of loaded arc, with the greatest possible radius. The diameter must therefore be determined so that the wheel may take the water at this point, and to fulfil this condition the radius is found by the formula $R = \frac{H-h}{1 + \text{sin. } 37° 33'} = \frac{H-h}{1{\cdot}61}$.

As this kind of wheel moves in the same direction as the tail-water, it may, without appreciable loss, dip a few inches into it, and in such a case H must be increased by that quantity.

The form to be given to the buckets of a wheel is a consideration of the highest importance. As we have already seen, the loss of fall $a'\,h''$, Fig. 6089, may be attributed wholly to the form of the buckets. For though we have shown that a portion of that loss is due to the action of centrifugal force, it would be possible, were no other conditions imposed, to counteract the effects of this force by the form of the buckets. Thus nothing could be easier than to construct a bucket that should take the whole of its water down to the lowest point. But there are two other conditions to be fulfilled, and these are, first, that the bucket shall receive the water while under the sheet that is poured on to the wheel; and, second, that the bucket shall not carry its water beyond the vertical line passing through the axis of the wheel. For it is evident that if the bucket does not receive the whole of its water while in that position, a portion of the water will fly off and be lost, whilst the remainder will fall into the buckets at a lower point; and it is equally evident that if the water be carried beyond the vertical it will destroy a portion of the work of the water in the descending buckets. To these conditions may be added a third, namely, that the form adopted shall be easy of construction. Engineers and millwrights have sought to ascertain what form best fulfils these antagonistic conditions, or rather, what form constitutes the most advantageous compromise between them; and though the problem has not yet been solved with sufficient precision to lead to uniformity of practice, wheels are now constructed that leave little to be desired in this respect. The adoption of iron as the material of

construction has simplified the question in a great degree, for with the introduction of this material, the third condition mentioned above, which in practice is one of great importance, may be considered to be eliminated, since, within certain limits, one form can be as readily produced as another. But when wood is used, a good deal must be sacrificed to this condition. The form which best fulfils the requirements of a ready reception, and a long retention of the water is obviously a curve; but this form is impracticable in wood. The form of the curve must therefore be approximated to by means of angles. The multiplication of these, however, would be attended with considerable difficulty of construction, and for this reason the number of angles in a wooden bucket never exceeds two. Buckets forming two angles are called three-part buckets, because they consist of three pieces. But even these are usually considered too difficult to construct and repair, and the common wooden bucket will be found to consist of only two parts, and consequently to contain only one angle. This angle is of about 114°, such being found to fulfil the required conditions most effectually. When iron is used, any curve may be readily obtained, and several kinds, as the segment of the circle, the cycloid, the epicycloid, or the Archimedian spiral have been employed. Each of these curves possesses certain advantages over the others, but when all the requirements of a bucket-curve are taken into consideration, the balance of advantage will, we think, be found in favour of the arc of the circle; and it is this curve that is now generally adopted. We shall therefore, in describing the methods of obtaining the curves, consider this one only.

The depth of the shrouding in overshot and high-breast wheels is usually made equal to 12 in., and the same distance is allowed between the buckets. With respect, however, to the number of buckets in a wheel of a given diameter, there is a want of uniformity in the practice of engineers. The following approximate rule is sometimes used;—In wheels from 12 ft. to 25 ft. in diameter, the number of buckets = the diameter × 2·1; in wheels from 25 ft. to 40 ft. in diameter, the number = the diameter × 2·3; and in wheels from 40 ft. upwards, the number = the diameter × 2·4. Probably the best practice is to take that number which, being exactly divisible by the number of arms, give the distance apart nearest to 12 in. For example, a wheel 20 ft. in diameter has a circumference of 62·8 ft., and supposing the number of arms to be 6, we have 60 as the number nearest to 62·8, which is divisible by 6. Taking 60, therefore, as the number of buckets, the distance apart will be $\frac{62 \cdot 8}{60} = 1 \cdot 04$ ft.

The form of the buckets is, as we have seen, a matter of great importance, and we have also seen that the form is, in a great measure, determined by the materials employed and the degree of skill available for their construction. We shall now describe the methods by which the various forms and dimensions are obtained.

Draw, Fig. 6092, with the diameter previously determined, the outer circumference of the wheel, and, with a diameter 12 in. less, describe from the same centre the inner circumference; this latter circumference will then represent the sole, and the former will limit the depth of the buckets, the distance of 12 in. comprised between the two being the depth of the shrouding. Divide the outer circumference into as many equal parts as there are to be buckets, and through the points of division draw lines to the centre. If the buckets are to be two-part wooden buckets, as in No. 1, describe from the same centre, that is the centre of the wheel, a mean circumference, and the portion of the radii cut off by this mean circle will be the starts or bottoms of the buckets. To obtain the wrist, or fore parts of the buckets, join the ends of the starts to the points of division on the outer circle corresponding to the next radius in each case. This method of obtaining the wrist is the one generally adopted for small wheels. In large wheels these portions of the buckets should be longer; and to give them the requisite additional length, set off upon the outer circle a distance beyond the next radius equal to one-fourth of the depth of the shrouding, and join this point to the end of the start, instead of the point corresponding to the radius, as shown in No. 2, Fig. 6092. It will be noticed that this method of obtaining the wrist, besides increasing its length, alters its angle, and so renders it capable of retaining the water to a lower point; but it narrows the distance between the angle of a bucket and the face of the next lower bucket. This distance may, however, be diminished to the extent shown in No. 2 without disadvantage; and the form of bucket thus obtained is decidedly superior to that given in No. 1. We think it might be applied advantageously to small as well as to large wheels.

6092.

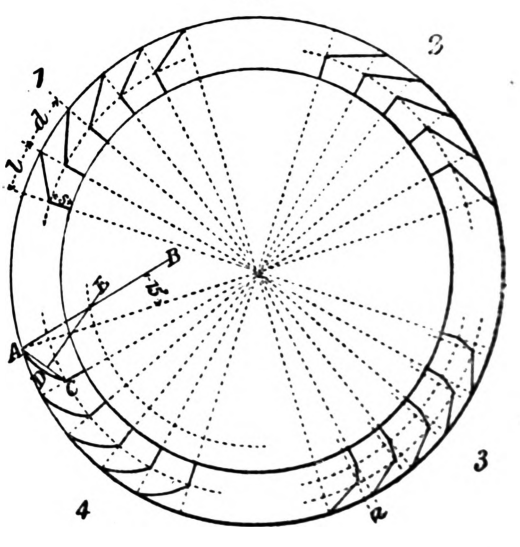

The obtain the three-part bucket, as shown in No. 3, describe two intermediate circles, dividing the depth of rim into three equal parts. The intersection of the first of these circles with the radii will give the length of the start. Set off upon the outer circle a distance from the extremities of the radii equal to one-fourth of the depth of the shrouding, and from these points of division draw lines towards the centre of the wheel. The intersection of these lines with the second intermediate

circle will give the length of the arm, to obtain which, join the point of intersection with the end of the start. The wrist is obtained by joining the end of the arm to the point of division on the outer circle corresponding to the next radius for small wheels, and to the point of division corresponding to the end of the arm for large wheels.

The mode of obtaining the curved bucket is shown in No. 4. To obtain this form, describe an intermediate circle at a distance from the inner circle equal to one-third of the distance between that and the outer circle. The intersection of this intermediate circle with the radii will give the length of the start. Join the end of the start with the division on the periphery corresponding to the next radius, as A C, for small wheels, and with a point at a distance beyond this division equal to one-fourth of the depth of the shrouding, for large wheels, as in the former cases. Bisect A C in D, and upon D erect the perpendicular D E. From the extremity A, draw A B at an angle of 15° with the radius. The point of intersection of the line A B with the line D E will be the centre from which to strike the bucket-curve with a radius = E A. The angle of 15° is the one generally adopted for overshot and high-breast wheels; but in large wheels an angle of 12° may be adopted with advantage. Wheels having buckets obtained from this angle carry their water down to a very low point in their revolution. It may be remarked that in practice the start is not straight, as shown in the figure, but rounded.

When the wheel is working at its ordinary speed, the buckets should not be more than half full, otherwise a loss of fall will be occasioned by the too early discharge of the water; in other words, the point of first discharge will depend, other things being equal, upon the quantity of water in the buckets. Consequently the breadth of a wheel will be determined by the quantity of water requisite or available. That is, the breadth of a wheel must be such that when moving with the requisite velocity, the buckets may be half filled, and no more than half filled, as they pass beneath the sluice.

Facilities must be afforded for the escape of the air contained in the buckets, otherwise the water will not enter freely. Various expedients have been resorted to, such as boring holes in the sole plate, for example. This mode of ventilating, however, is objectionable, on the ground of allowing a portion of the water to escape. The best system of ventilation consists in a proper delivery of the water. If the sheet of water which is poured upon the wheel be thinner than the breadth of the opening between the buckets and shorter than the length of the buckets, the air will escape freely as the water enters. There is, however, one case in which some other system of ventilating becomes necessary, and that is when the wheel has to work in back-water. In some districts this is a very frequent case, and consequently a suitable provision must be made for it. The system generally adopted in such cases is that introduced by Wm. Fairbairn, and is shown in Fig. 6093. As the water enters, the air in the bucket passes out through the opening in the sole-plate, as shown by the arrows *a*, *b*, and as the bucket rises from the back-water, the air re-enters and prevents the water from rising with it, or, as the millwrights term it, prevents the bucket from sucking. When ventilated in this way, a wheel will work satisfactorily in several feet of back-water.

6093.

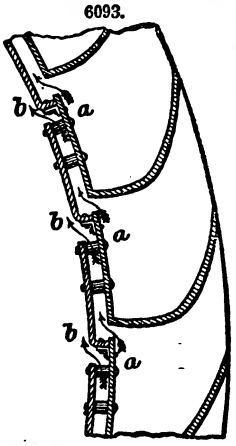

The dimensions of the arms and axle are calculated in the usual manner according to the strain brought upon them, and the nature of the materials employed. The following formula is applicable to the gudgeons; W being the weight upon the gudgeons in cwts., and D the diameter of gudgeon-journal in inches, $D = \sqrt[3]{\cdot 86\ W}$ for wrought iron, and $D = \sqrt[3]{W}$ for cast iron.

When the height of the effective fall is known, the work of the wheel may be readily calculated. Thus we have seen that the total power of a fall is Q H, and that the effective power, that is, the force which may be utilized, is Q h. The effective fall h is equal to the mean height of the loaded arc, which is the vertical distance from the point at which the wheel receives the water to a point situate half-way between the points of first and final discharge. To determine the work of a wheel, therefore, find the effective fall h and the quantity of water Q expended a minute; then the force impressed upon the wheel is Q h, which is the total or absolute work of the wheel. The useful work, that is, the force it is capable of transmitting to the machinery, is Q $(h - x)$, x being the quantity of work absorbed by the friction of the gudgeon-journals, expressed as feet of fall. The effective horse-power of the wheel is P = ·001892 Q $(h - x)$, and the quantity of water necessary to exert a given force is $Q = \frac{5288 \cdot 5\ P}{(h - x)}$. In a well-designed and carefully-constructed wheel, Q h should equal ·80 Q H; it is rarely, however, that this high percentage of work is obtained, ·70 Q H being the limit seldom exceeded, engineers having apparently become satisfied with the type of wheel that gives this result.

The preceding method of calculating the work of a wheel is probably the readiest, as well as the most accurate. The following formula, due to M. Poncelet, has been found to give very exact results, $P\ v = 48\ Q\ h + 6\ Q\ (V \cos.\ a - v)\ v$, in which P represents the weight raised by the circumference of the wheel, and v the velocity of that circumference in feet a second, and therefore $P\ v$ = the work of the wheel. The remaining symbols Q, h, V, and a, represent respectively the quantity of water in cubic feet a minute, the vertical distance from the bottom of the wheel to the point in which the mean particle of the fluid vein meets the circumference of the wheel, the velocity of this mean particle, and the angle formed by a tangent to the curve of this velocity, drawn from the point at which the particle meets the circumference, with a tangent to the circumference, drawn from the same point.

We shall now show the application of the foregoing principles to the designing of a wheel to utilize a given water-power. The example shown in Fig. 6094, which we take as an illustration, was designed to work the pumps of a lead mine, 80 fathoms in depth below the adit, and in which the quantity of water to be raised necessitated a motor of 20 effective horse-power. The total available fall was 25·5 ft., and the mean discharge of the stream, when not swollen by rains, was found to be 550 cub. ft. a minute. Thus the total power of the fall was $25{\cdot}5 \times 550 \times {\cdot}001892 = 26{\cdot}5$ horse-power. Obviously, therefore, to make 20 of this horse-power effective, the wheel must give an unusually high percentage of work. As it was requisite that the wheel should have a velocity of 7 ft. a second at the circumference, the head required to bring the water upon the wheel with this velocity is 9 in. The value of h may therefore be taken as $9 \times 2 = 18$ in., and $H - h = 25{\cdot}5 - 1{\cdot}5 = 24$ ft. Applying the formula already given, we have $\frac{24}{1{\cdot}6} = 15$ = the radius of the wheel. The diameter of the wheel will thus be 30 ft. The circumference is $30 \times 3{\cdot}1416 = 94{\cdot}248$ ft. The number of arms being 8, 96 will be the nearest number divisible by the number of arms, and therefore 96 = the number of buckets. To carry the water down to the lowest possible point, curved iron floats are used, the length of the wrist being found as in No. 2, Fig. 6092, and the centre of curvature determined, as shown in No. 4, with an angle of 12°. The sectional area of a bucket is approximately 9 in. × 12 in., and as the buckets are not to be more than half full, we have $\frac{9 \times 12}{2} = 54$ sq. in. as the available area. The discharge of the stream is $\frac{550}{60} = 9{\cdot}16$ cub. ft. a second, and as the wheel has a velocity of 7 ft. a second, seven buckets will pass the sluice in that time. Hence we have $54 \times 7 \times x = 9{\cdot}16$ cub. ft. = 15828 in.; whence $x = \frac{15828}{54 \times 7} = 42$ in., nearly = the length of the bucket, and consequently the breadth of the wheel.

6094.

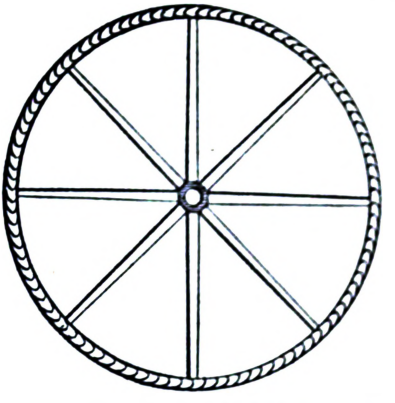

If the work of this wheel be calculated from the height of the loaded arc, as described above, it will be found to be about 80 per cent. of the total power of the fall.

The mode of applying the water to a wheel is a matter of great importance, and one which has not received its due share of attention. Instead of being directed into the buckets, in very many instances it is left to get in as best it can, and the tardiness with which it frequently enters under these conditions has rendered it necessary to give a longer radius of curvature to the fore parts of the buckets than would be requisite were more care taken in the application of the water. The angle of 12° which we have spoken of above, and which has been adopted in the foregoing example, we recommend only on the condition that the water is delivered in the most fitting manner, and it therefore behoves us to consider briefly this question.

When the wheel is overshot the orifice of the sluice should be brought as near as possible to the top of the wheel, and from this point a wheel-race should conduct it to the required point. This wheel-race should be slightly inclined and its length should be such that, with the given head of water, the sheet may meet the circumference of the wheel in the direction best suited for a ready entrance into the bucket at that point. The thickness of this sheet should be less than the width of the opening between the buckets, and its breadth less than the length of the bucket by about 4 in., thus allowing 2 in. at each end for the escape of the air. The wheel-race ought never to be inclined more than $\frac{1}{12}$, and about half an inch play should be left between the end of the race and the wheel.

When the wheel is high-breast, the orifice of the sluice must be placed directly over the point to which the water is to be applied, and the sides of the orifice so disposed as to direct the water into the buckets. The method of finding the proper direction of the sheet is as follows; — At the point c, Fig. 6095, at which the water meets the circumference of the wheel, draw a tangent $c\,e$ to this circumference, and trace the profile $c\,b\,a$ of a bucket. Take the velocity v of the wheel as equal to ·66 of the velocity V of the effluent water, and mark off to any scale a length $c\,e$ to represent this velocity. Through the point e draw $e\,d$ parallel to the face $b\,c$ of the bucket, and from the point c, with a radius equal to V on the same scale, describe an arc cutting the line $e\,d$ in d. Join the points d and c. Then the line $d\,c$ produced will be the direction sought.

6095.

The line $d\,c$ shows the direction of the mean particle of the fluid vein; to find the directions of the sides of the orifice, repeat the construction 2 in. above and 2 in. below the line $d\,c$. The lower edges of these sides should terminate in a circumference concentric with the wheel, with a radius half an inch greater than that of the wheel. The breadth of the orifice should be less than the width of the opening between two consecutive buckets, and its length should be 4 in. less than that of the buckets, as in the preceding case, to allow the air to escape freely. When the water is applied to the

wheel from an overfall, the edge of the overfall must be determined in the same manner as the sides of the orifice described above.

See FLOAT WATER-WHEELS. HYDRAULIC MACHINES, *Varieties of.*

PADDLE-WHEEL. FR., *Roue à aubes ou à palettes d'un bateau à vapeur;* GER., *Ruder*, or *Schaufelradenies Dampfschiffes;* ITAL., *Ruota a palette;* SPAN., *Rueda de paletas propulsora.*

See MARINE ENGINE.

PAPER MACHINERY. FR., *Machine à papier;* GER., *Papier-Maschine;* ITAL., *Macchina da carta;* SPAN., *Maquinaria para la fabricacion de papel.*

The distinctive feature of hand-made and machine-made papers is, that whilst the former is made in separate sheets of limited sizes, machine-made paper, though limited in width, runs off from the machine in long rolls, frequently more than a mile in length without a break. Although the use of the machine is all but universal for ordinary papers, some of the more costly descriptions are still hand-made—drawing papers, for instance, and that known as antiquarian, which measures about 53 in. by 31 in., is the largest so made. Such is the quantity of liquid pulp required in the manufacture of a single sheet of this paper, that eight or nine men are required to manipulate it; whereas, when once the paper-making machine is in good working order, but little superintendence is necessary.

Of late years the demand for paper has developed to so great an extent, that the paper-makers' best stock—rags—has not been supplied in anything like sufficient quantities to meet their requirements. Much expense has been incurred, and great ingenuity has been displayed in attempts to utilize a number of other fibrous materials for the manufacture of pulp. Esparto grass, straw, and wood are now largely employed in the fabrication of pulp suitable for printing paper; bagging, canvas, and old rope are used for brown and other coarse papers, but hitherto no substance has been found to supersede, or even to satisfactorily supplement rags for the finer kinds of paper, such as writing and drawing papers. Weight for weight in the raw material, rags are far more costly than other substances employed; but when the waste in manufacture is taken into account, together with the cost of the various processes and the value of the produced pulp, the balance in favour of the recently-adopted raw materials is very much reduced. Whatever article is used for stock, it is only in the manufacture of pulp that the processes are dissimilar, for the pulp once obtained, there is no difference in principle involved in the machines which turn it into paper.

We have first to consider paper made from rags, and as the quality of the pulp depends upon the description and regularity of the rags employed, it is of the utmost importance that these should be carefully sorted and cleansed. In the rag-sorting room, which is usually in an upper floor of the mill, rows of tables are arranged, provided with boxes divided into numerous compartments.

The top of each table is covered with a wire-gauze sieve, and there is fixed an upright knife with its edge facing the sorter. Girls are usually employed for this operation. They take each piece of rag separately from the unsorted mass, tear and slit it into small fragments against the knife, remove all foreign matters, shake off the dust as much as is possible, and place the rag in its proper compartment.

Fig. 6096 is a ground plan to show the general arrangement of a paper-mill for two rag paper-making machines, Figs. 6097, 6098, longitudinal sections, and Figs. 6099, 6100, cross-sections of the mill. A, rag store-rooms; B, main building, consisting of three stories and attics; on the ground floor are placed rough rag-dusting room, rag-engine gearing, immersion boxes, and wet presses. On the first floor are the rag-engines and the rag-boilers, which are suspended with their gearing nearly over the alkali store; also the mixer for bleaching liquors, and stock cisterns with gearing driven from upright shaft. On this floor space is left for a large quantity of boiled rags stored in boxes or tanks, and for the store of half stuff from immersion boxes and gasing cells.

In the second floor are placed the rag-cutting, willowing, fan, and dusting machines, with the necessary gearing; at the end immediately over the rag-boilers, trap-doors or hatchways are cut in the floor, through which the boilers are charged with the prepared and assorted rags. The rags, both assorted and undusted, are stored in convenient receptacles both on this and on the third floor. On the third floor are the hand-cutting machines, and space for sorting and dusting the rags.

C contains the paper-making machines, with an engine to each machine. This is a long one-story building, with plenty of light, and a roof provided with ample means for ventilation; and arrangements should be made to carry off the steam from the machines, as, if it is allowed to collect, it will condense on the roof and drop down upon the paper in the machines, spoiling the roll in hand, and injuring the character of the mill for regularity in quality.

The machines must be erected on good solid foundations, and the floor should be laid with a gentle slope to allow all water to run at once out of the machine-room. To allow of easy access to the machine, and for the occasional removal of a roll for repairs, there should be a clear space on each side of the machine about 1 ft. wider than the machine itself; thus, a 6-ft. machine should be erected in a room not less than 20 ft. wide.

D, sizing and parting room, similar to C, but wider, to allow the stock of sized and unsized paper to lie a sufficient time after being made and sized.

E, drying-machine room, about the same size as C, with engine-room at the side, one engine driving both drying machines.

F, a two-story building, containing on the ground floor the cutting, glazing, and rolling machines, the base plates for dry presses, and hoists for the cut and glazed paper. The hoists are worked by a steam-engine, either separately or together, and lift to the upper floor which contains the dry presses, the general finishing apparatus, and the store of finished paper.

G, on the ground floor the size-making is conducted, which is lifted to the upper floor, a sufficient height to allow the size to flow freely to the sizing machine.

H, for chemical apparatus, is one story high, with ventilation in roof, and flue to convey gases to chimney.

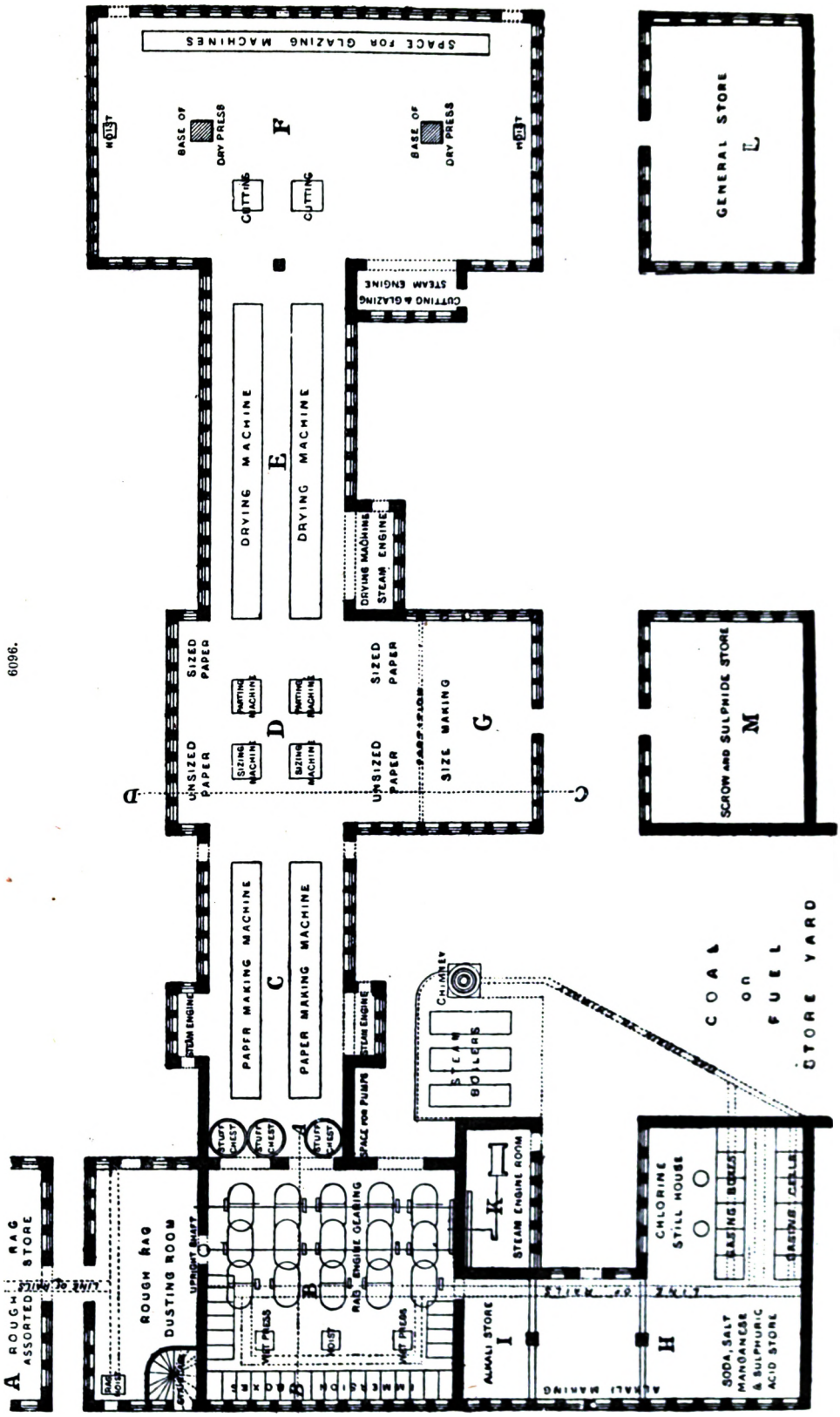
SPACE FOR GLAZING MACHINES
HOIST
BASE OF DRY PRESS
F
CUTTING
CUTTING
BASE OF DRY PRESS
HOIST
GENERAL STORE
L
CUTTING & GLAZING STEAM ENGINE
DRYING MACHINE
E
DRYING MACHINE
DRYING MACHINE STEAM ENGINE
SIZED PAPER
PARTING MACHINE
PARTING MACHINE
D
SIZING MACHINE
SIZING MACHINE
UNSIZED PAPER
UNSIZED PAPER
PARTITION
SIZE MAKING
G
SCROW AND SULPHIDE STORE
M
PAPER MAKING MACHINE
C
PAPER MAKING MACHINE
STEAM ENGINE
STEAM ENGINE
CHIMNEY
STEAM BOILERS
COAL on FUEL STORE YARD
STUFF CHEST
STUFF CHEST
STUFF CHEST
SPACE FOR PUMPS
A
K
STEAM ENGINE ROOM
CHLORINE STILL HOUSE
CASING BOXES
CASING CELLS
ROUGH RAG ASSORTED STORE
LINE OF RAILS
ROUGH RAG DUSTING ROOM
UPRIGHT SHAFT
B
RAG ENGINE GEARING
WET PRESS
HOIST
WET PRESS
LINE OF RAILS
ALKALI STORE
I
H
SODA, SALT MANGANESE & SULPHURIC ACID STORE
ALKALI MAKING
RAG HOIST
EMMERSION BOXES

6096.

I, alkali store, on the ground floor. On the floor above, as before mentioned, are placed the rag-boilers.

K, engine-room for rag-engines, with steam-boilers and chimney at side. It is considered preferable to have several engines to drive the separate machines, rather than large engines communicating by long lines of shafting with the various machines. By this means the heavy cost of shafting and numerous drums is avoided; the machines may be worked to a great extent independently of each other, whilst if a convenient position is chosen for the range of steam-boilers, and the steam-pipes are carefully lagged, comparatively little power is lost.

L is a general store. M, store for screw and sulphide. N, general shops and offices.

Dusting Machine.—The most simple apparatus consists of a truncated cone turning on the axis of the large circle, and on two pulleys working into a groove in the top of the small circle. The case is covered with a web of wire-work. The interior of the casing is furnished with iron teeth placed spirally, which force the rags to pass through the opening opposite to the inlet. A dusting machine of this kind is only suitable for fine, clean, and half-clean rags. Fig. 6101 is a rag-duster made after this plan by G. Tidcombe and Son, of Watford.

To render the action more forcible, there must be placed in the interior a shaft having iron arms arranged spirally. These arms carry the rags against the wire gauze, which turns inversely to the rotative movement of the shaft. This arrangement is preferable for very dirty rags, hems, seams, and the like.

When the dusting machine is cylindrical, it may have an inclination of 25° to 40°.

The devil serves for dividing and dusting the particles of linen, hemp, oakum, and ropes. Constructed on the same principle as the preceding apparatus, it offers a resistance in ratio with the work which it should produce. The iron axis fitted with spindles is alone movable, and the impurities fall upon the web of an iron frame.

The waste caused by the devil, sometimes very considerable, has caused its rejection in some paper factories. It much facilitates, however, the

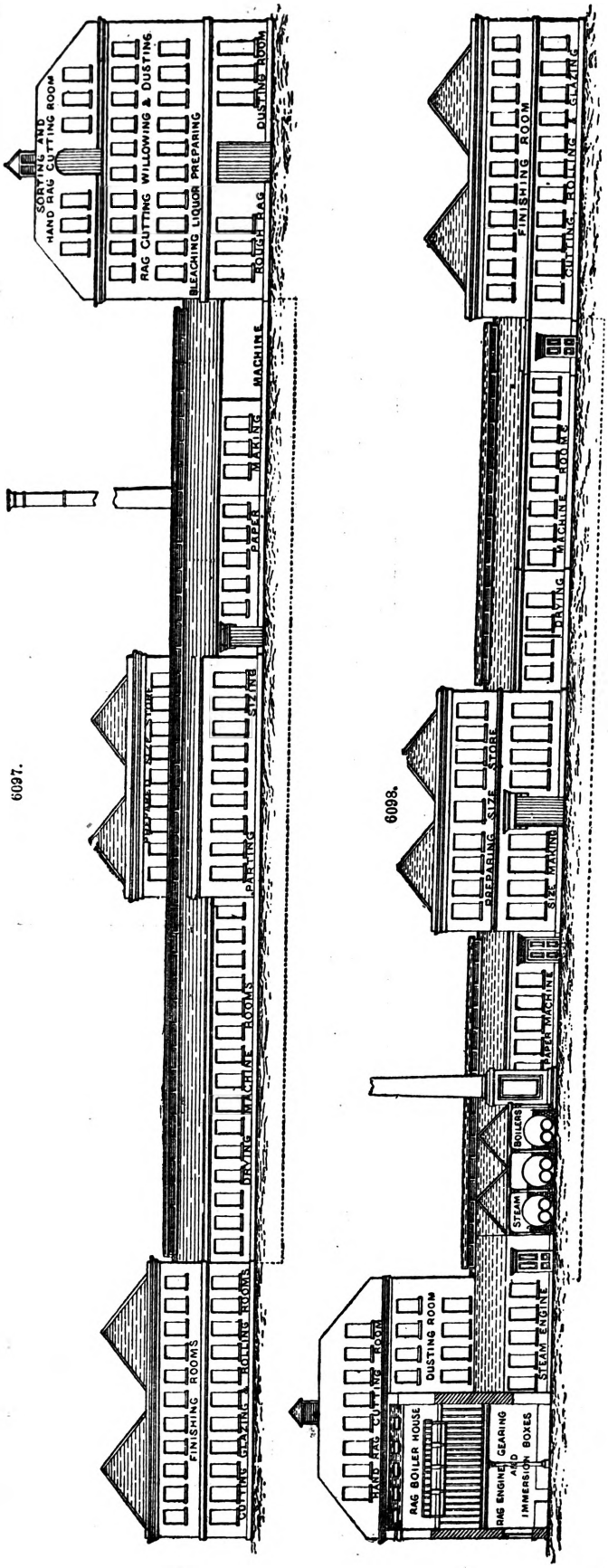

operation of washing, and the different other manipulations in disintegrating the fibres and rendering them suitable for undergoing the action of the leys. These rags thus softened are cut and torn with greater ease. It requires more power than any other rag-duster.

6100.

6099.

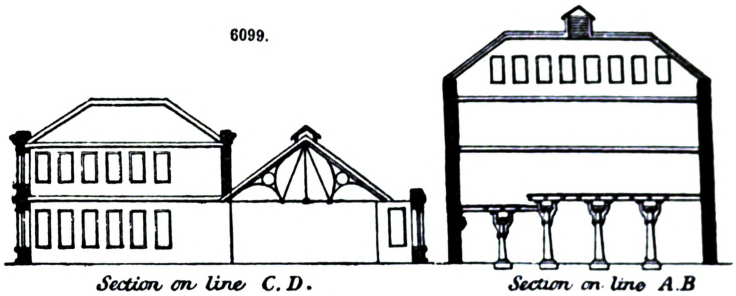

Section on line C. D. *Section on line A.B*

6101.

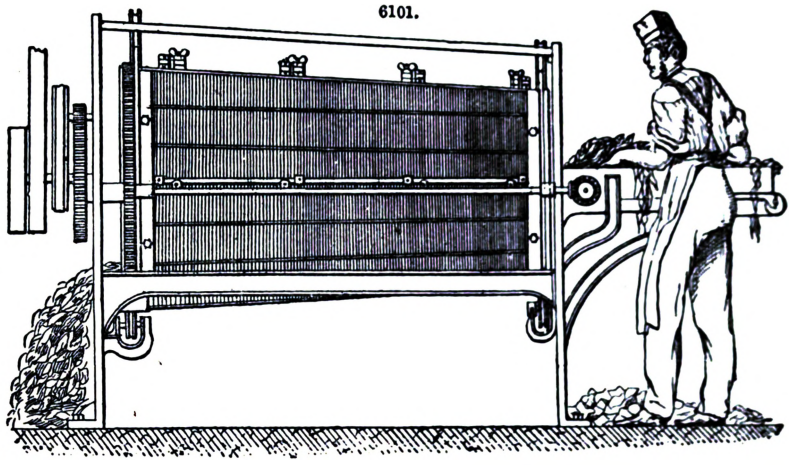

Whatever be the dusting machine employed, it is indispensable to enclose it in a frame cased in wood for localizing the dust and other impurities which, mixed with the fibres, are called dusting-machine waste. The quality of this waste varying according to the nature of the rags, it is important not to work on the same day a greater variety of rags than can be avoided.

6102.

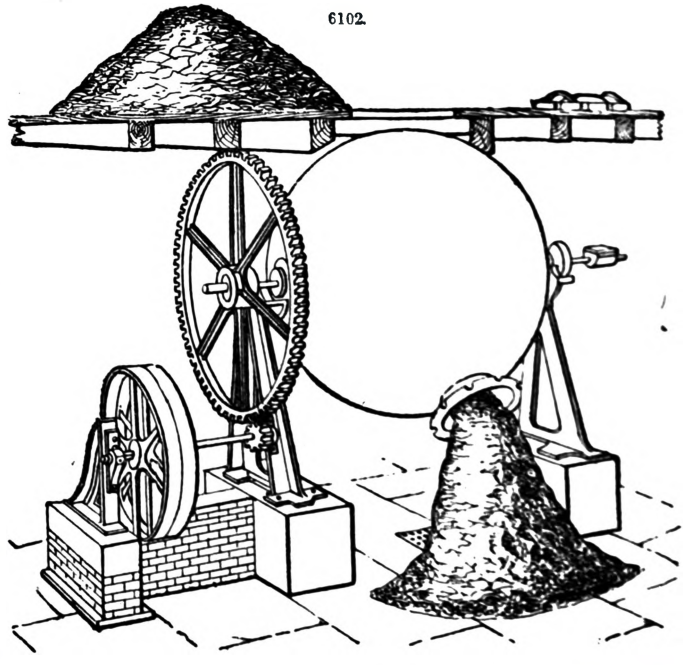

B. Donkin & Co.'s Spherical Rotary Rag-boiler, Fig. 6102. —These spherical high-pressure boilers are made in wrought iron, about 8 ft. diameter. The plates are of the usual substance, but owing to its spherical form, the boiler offers twice the resistance to rupture which would be given by a cylindrical boiler of the same diameter, and made of plates of the same thickness. The spherical shape has also another important advantage; it allows all the rags to fall out by themselves when the boiler is revolving with its cover off. The boiler is mounted on a pair of trunnions, both of which are made hollow for the purpose of admitting steam and water. The rotary motion is communicated to the boiler through a spur-wheel keyed on to one of the trunnions. The flanges of the trunnions and the boiler are faced in the lathe, so that a good joint may be made with red-lead simply. Inside the boiler are lifters

to agitate the rags as it revolves, and strainers to take off the dirt and refuse. The gearing by which the boiler is driven is proportioned so that the vessel makes one and a half revolutions a minute, with the shaft carrying the belt-pulleys running at seventeen and a half revolutions. Altogether the boiler stands about 11 ft. 6 in. high, from the floor-line to the top of the man-hole, and in practice it is usually mounted so that it may be filled through an opening in the floor overhead.

Washing Engines.—Formerly all dividing of the rags was performed by means of stampers or stocks, for which reason the machines for tearing, scratching, and refining, have got the name of rag-tearing, rag-scratching and washing engines, which they retain to this day. A modern washing engine, Figs. 6103, 6104, is a large box, A A, 10 ft. long, terminating at each end by a half

6103.

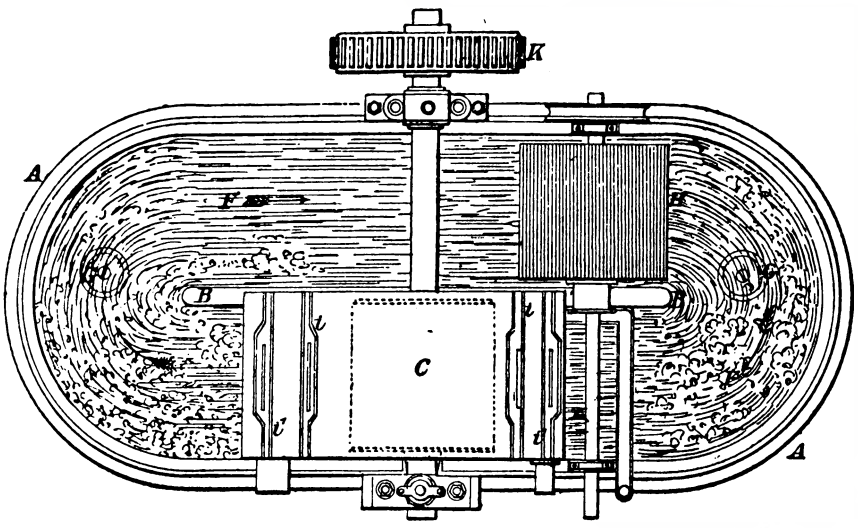

6104.

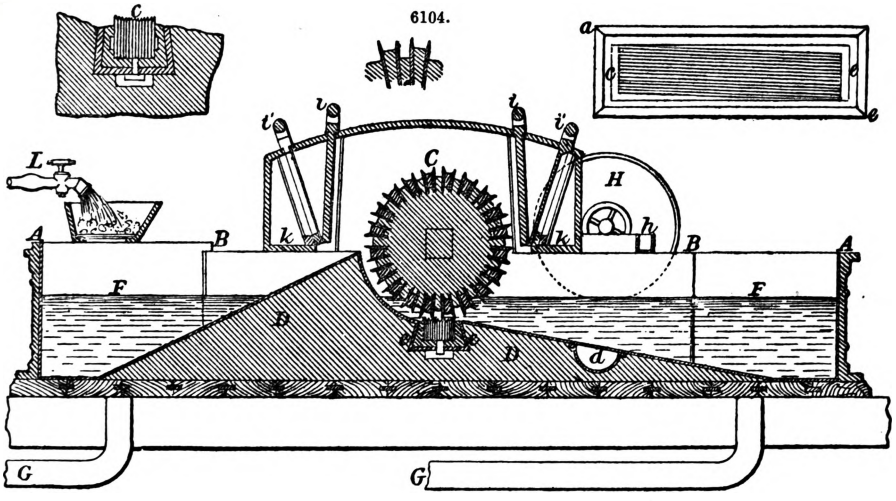

cylinder, composed of eight metal plates, bolted together on a wooden foundation; a vertical diaphragm B B, placed lengthwise, divides it into two troughs, leaving at the ends a space as large as each trough F F, in order that the rags may continually circulate from one channel to another, according to the movement of the liquid obstruction.

In the middle of one of the divisions, and perpendicularly with the diaphragm, is adapted on cushions the axis of a cylinder C, furnished with blades, which are arranged in pairs and retained in their grooves by wooden wedges between each; underneath this cylinder is laid a metal plate *e e*, a kind of frame filled with blades *c*, which are bolted together and tightly fixed by wooden wedges run in with lead; these blades, thirteen in number, are parallel to each other, and form a slight angle with the blades or the axis of the cylinder; this axis, more or less horizontally raised with the aid of a double adjusting screw, leaves an interval which is gradually diminished as the rags are divided, the distance varying according to the degree of division which is to be obtained. The cylinder is turned about from 220 to 240 times a minute, and thus determines the velocity of the water, which thence circulates into the engine; the rags, forced away by this current, pass and repass continually between the cylinder and the plate, where they are divided. The washing is also completed in the engine at the same time that the tearing and scratching of the rags is effected,

and as the water must be incessantly renewed, a continual current of limpid water is introduced into the engine by a cock L furnished with a woollen sack, and pouring upon a sieve. After the rags are washed, the water flows away by two wire-gauze frames i^1, i, placed before and behind the cylinder, into the drains k bordering on an ordinary discharge-tube. When the greatest part of the turbid water is thus extracted from the half stuff, there must be placed before the two frames with wire gauze the two plain wooden shutters i, i. Sometimes there is arranged in the engines, on the second trough, a washing cylinder furnished with a wire gauze H, turning freely with a velocity of about twenty revolutions a minute, under the influence of the current which affects, in the other trough, the tearing cylinder; this cylinder, whilst opposing the passage of all fibres, allows the liquid to enter its interior. The water which has entered the washing cylinder is taken again by tubes of spiral form bringing back the liquid in the axis and letting it pass out through the drain h h^1 above the engine; the drain d covered with a lattice retains the sand and other heavy bodies.

A toothed wheel K, or in some cases a pulley, communicates the movement to each cylinder of the engines for tearing and refining; these cylinders have generally forty-six blades jointed in pairs, and the refining engines fifty-one blades arranged by threes.

L. C. Stuart's ingenious pulper, Figs. 6105 to 6107, consists of a cylinder closed at each end, containing a revolving disc of nearly as large diameter as the interior of the cylinder within which it revolves, and the disc is of such thickness as to leave a small space between each of its two side surfaces and the two end covers of the cylinder. The surfaces of the disc and of the interior of the cylinder are formed with grooves, or with teeth, to aid in the grinding process. The disc receives a quick rotary motion, and there is provision made for the disc to move a small distance to and fro within the cylinder.

The stuff is fed with water from an elevated reservoir or cistern into the cylinder at one end towards the centre, and by reason of the source of supply being elevated, there is a proportional hydraulic pressure. The pulp flows off from the other end of the cylinder through a pipe, which can be more or less elevated, by which the speed of flow through it may be regulated, and the stuff kept for a longer or shorter time under the grinding process.

Several serious defects existing in the ordinary stuff engine are obviated in this machine, by providing for the withdrawal of the fibre from the action of the grinder the moment it is sufficiently reduced, and leaving to be longer acted upon that which requires more grinding, by which means the whole of the fibre, whether strong or weak, is reduced to pulp of uniform fineness, each part of it being subjected to a degree of grinding proportioned to its strength; whilst by rendering the feed independent of the motion of the grinder, the engine can be run at any speed that its strength will sustain, and the work is done much more rapidly than in the old engine. By dispensing with the annular vat, and feeding the stuff to the engine through a pipe, and discharging the pulp by similar means, this engine is rendered very compact, and requires far less space than that occupied by the engine heretofore in use. To suit various kinds of stock, the grinder adjusts itself as required; this is accomplished by having a revolving grinder placed between two stationary grinders, the revolving grinder having play on its axis to enable it to move freely to and fro between the stationary grinders as required; the fibre to be ground being caused to pass in a current through the spaces between one stationary grinder and one side of the revolving grinder, thence round the periphery of the revolving grinder, and through the space between the opposite side of the revolving grinder and the other stationary grinder to the orifice of discharge.

As in grinding rags or other fibre to half stuff, or in reducing half stuff to pulp, it is important to vary the rate at which the fibrous matter is fed through the grinder, while the motion of the grinder remains constant, the feed is rendered adjustable by varying the level of the nozzle of the discharge-pipe relative to the level of the head of water in the feed-pipe; the effective head of feed pressure is thus varied, and as a matter of course the velocity of the feed current is correspondingly varied.

The fineness of the grinding, it will be seen, depends upon the hydraulic pressure on the feed and the speed with which the disc of the grinder runs, while the rate of feeding depends upon the hydraulic pressure. In case a knot of fibre should be fed into the grinder, the disc would yield, moving towards the side opposite the knot, to allow the knot to pass freely towards the periphery, where it would quickly be reduced by the energetic action of that part of the grinder. While this reduction of the knot is going on at the feed side of the grinder, both the feeding and the discharge are diminished by the forcing of the revolving disc against the discharge orifice. If the fibre is easily reduced, it will flow freely through the grinder, and occupy little more space on the feeding than on the discharge side of the disc; but if the fibre is tough and grinds slowly, it will accumulate on the feed side, and force the disc to the discharge side, retarding the discharge, the strong fibre being in this way subjected, as it requires, to more grinding action than the weaker fibre.

The pump is supplied from a stuff chest through the suction-pipe A, Fig. 6105; it discharges into the sliding shoot B in the feed-hopper. This shoot is for regulating or shutting off the supply to the beater as required. The feed-pipe conveys the stuff to a point near the centre of the disc, and after it is beaten it passes off by the pipe E. The disc C has ribs or projections cast into both its faces placed in the manner shown; one side works truly against a fixed plate with similar knives in it, and the other side against a plate which is fixed to the screwed cylinder D, and is adjusted by means of the hand-wheels L, L.

The beater, as supplied by Easton and Anderson, of London, requires only to be bolted firmly down to a foundation, as most convenient; and the pump, with the other adjuncts, has to be fixed as shown on the drawing.

The first thing to be done after mounting, or after new disc or plates have been received, is the setting and facing of the working surfaces, which is performed as follows;—

Before starting, the tail-screw K must be screwed back, and the four working surfaces set close home, one on to another, by the front set L; the tail-screw K must then be screwed forward until

it touches the end of the shaft M, and in that position must be secured by the locking handle. The four working surfaces must then be brought out of contact by slacking back the front set L, and the

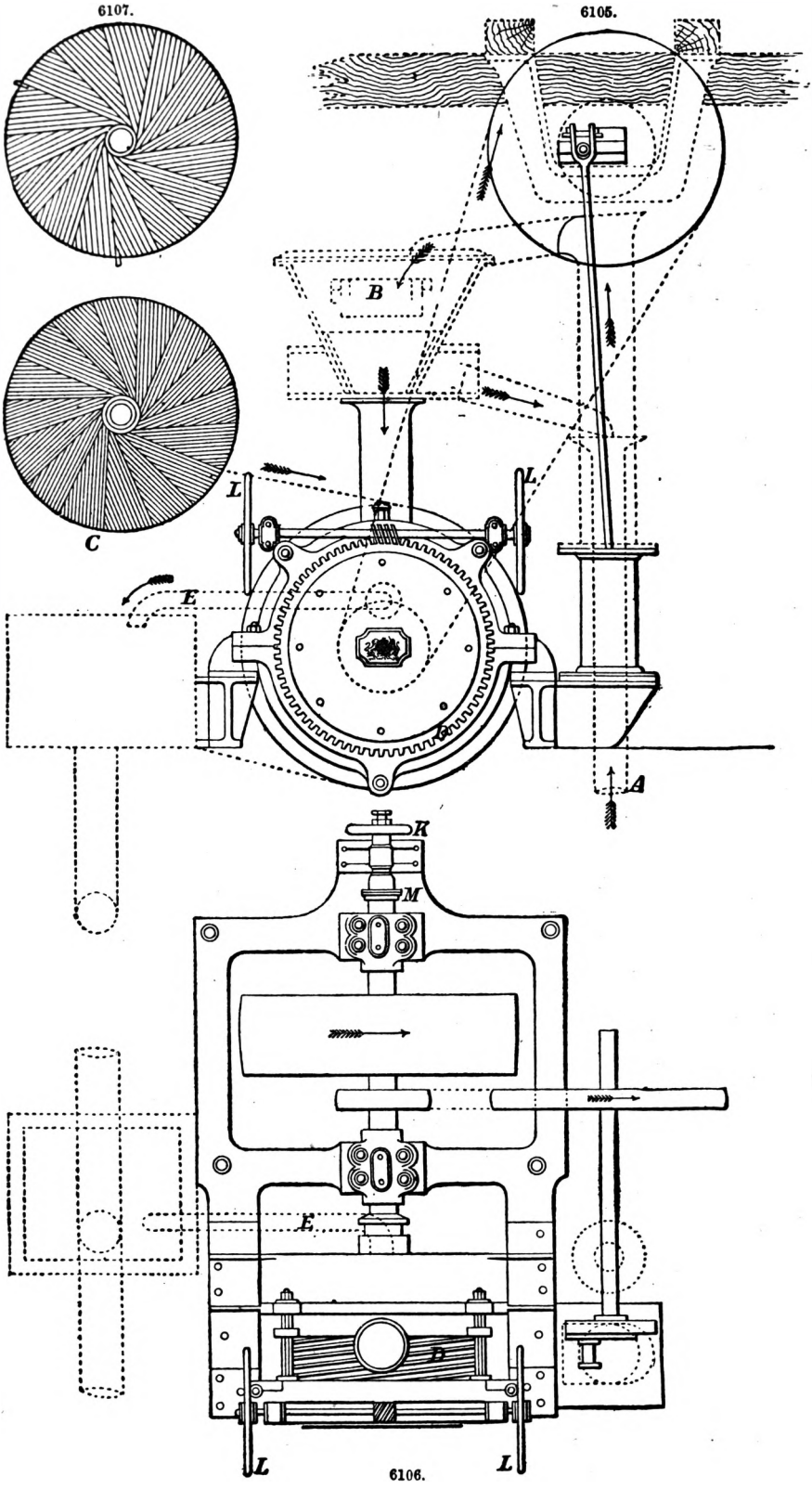

beater started. By slowly setting up the front set L, and thus screwing the surfaces into contact, running water through the machine all the time, the facing and surfacing will be accomplished, and, in order that the finishing sides may come into contact for this purpose, the tail-screw K must be gently eased. The sound produced will soon show how far the grinding has advanced, but it will be prudent to take out the surfaces, and judge by actual inspection whether they are to a fair bearing all over. This surfacing operation will ordinarily occupy rather less than one hour.

The beating engine is filled in, the bleach washed out, the size and colour added, the roll being down in the ordinary manner. By the time the admixture of the whole is complete, the engine may be emptied into the reservoir chest below. Three ordinary beating engines, filled and emptied alternately, will be kept fully employed in this operation.

Before starting, the surfaces ought to be set in the same manner as in grinding; that is to say, the tail-screw K must be screwed back, and the four working surfaces set home by the front set L, the tail-screw set to the spindle end and locked, exactly as there described. After bringing the surfaces out of contact by slacking back the front set, the beater may be started; but it is necessary to have the sliding shoot B in the feed-box so placed that the stuff may for some minutes pass away to the overflow without entering the beater. By this time the stuff will have become thoroughly mixed in the circular chest, and all else being ready, the sliding shoot may be reversed and the flow from the pump turned direct into the feed-box, and so into the beater. The working surfaces must then be screwed up by the front set L, and regulated until the requisite sample of pulp is produced, which may be readily ascertained at the discharge nozzle.

On no account must this regulation be attempted by altering the tail-screw K, as it is essential that the back or finishing surfaces should be in contact, but so guarded at the same time by the tail-screw, that no force applied at the front set could possibly bring them in closer proximity. The adjustment of the tail-screw can only be properly accomplished when the beater is standing, and the machinery stopped for oiling, &c., say, once every twelve hours.

In stopping, the sliding shoot must be set to pass away the stuff to the overflow, as before mentioned, the grinding surfaces relieved by slacking back the front set, washing through with a stream of water at the same time.

The tackle should not be allowed to run on after becoming thoroughly dull, as the work produced will be unsatisfactory, and the loss of power very great; under such circumstances, the spare set, which should always be kept sharp and in readiness, should at once be put in, which will occupy but a short time, and the dull set prepared for the next change of plates at leisure.

Easton and Anderson, who make this machine, have found that it produces a thoroughly even and continuous supply of pulp.

E. A. Cowper's new arrangement of pulper avoids the peculiar cutting action of Stuart's pulper, acting more on the principle of opening and separating the fibres, and is therefore preferable where it is of importance to retain the pulp fibres of their full length. It is especially suitable for pulp from wood, straw, or esparto. It consists of a closed cylindrical vessel, having at one end an inlet by which the fibrous material to be separated is introduced with a regulated proportion of water, and at the other end an outlet for the water with the separated fibres suspended in it. A shaft passes through a stuffing box in the centre of the one end of the vessel, and another shaft likewise passes through a stuffing box in the centre of the other end. On one shaft are fixed a number of radial bars, and on the other shaft is fixed a frame which can revolve outside these radial bars, and from which a number of radial bars project inwards, the two sets of radial bars being arranged so as to pass clear of each other. The two shafts revolve in opposite directions, so that their bars, moving through the liquid in the vessel, produce powerful opposing currents, which, dragging the fibres in different directions, separate them from each other without breaking them.

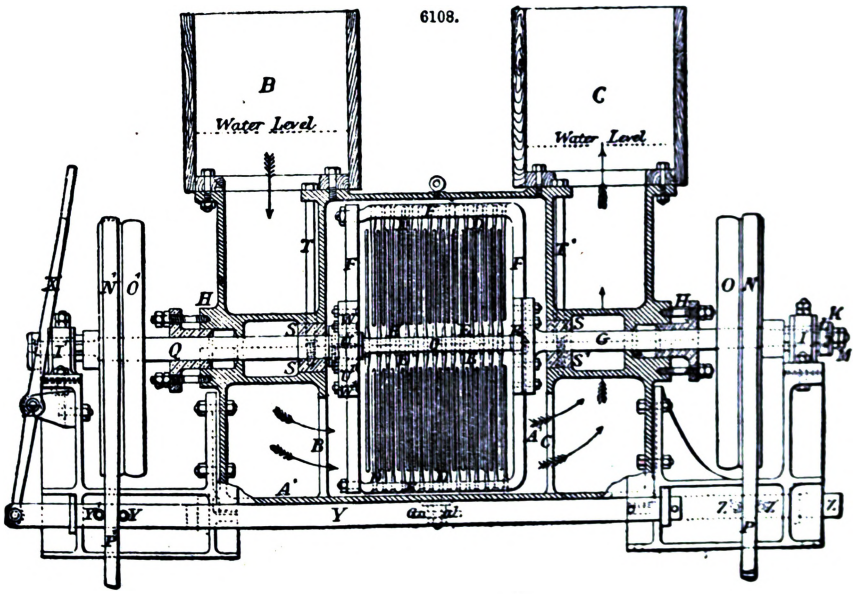

The speed of working may be such as to produce the powerful currents required to tear asunder the masses of fibre, the vessel being closed. The contained liquid while agitated by opposing currents is not made to rotate bodily, and the operation is rendered continuous, the materials to be operated on being introduced in a regular stream at the one end of the apparatus, and the liquid with the pulp uniformly distributed through it issuing at the other end.

Fig. 6108 is a longitudinal section of this apparatus. A, A¹, are two halves of the cylindrical case of the apparatus; B B is the inlet for the fibrous materials to be separated, and for water; C C is the outlet for the water, with the separated fibres suspended in it after having been acted on within the cylinder. The radial bars D, D, are attached to the frame F fixed to the shaft G, which passes through the stuffing box H, and is at its outer end carried in the bearing I. The end of the shaft G is provided with a screw J passing through a collar K set with a feather L on the shaft G, so that it must turn therewith, but can slip longitudinally thereon. Nuts M on the screw J regulate the position of the shaft G, and the one set of bars D attached thereto in relation to the other bars E. The shaft G is provided with fast and loose pulleys O and N, so that it can be driven by a strap P carrying round the radial bars D, D. The other radial bars E, E, are attached to the shaft Q, one end of which is steadied by the brass bush R in the end of the shaft G. The shaft Q passes through the stuffing box H¹, and is supported at its outer end by the bearing I¹, and is provided with means of longitudinal adjustment, as described, for the shaft G. The shaft Q is also provided with fast and loose pulleys N¹, O¹, by which it is driven by a strap P¹ in the opposite direction to the shaft G.

In order to take up any shake which may occur owing to the wear of the brasses S, S¹, screws T, T¹, are provided, tapped into the bottom brasses S¹, S¹, and having their ends resting in holes in the casing of the gland, so that by turning the screws T, T¹, the bottom brasses S¹ can be raised.

The end of the frame F is bushed with brasses U, U¹, to turn on the shaft Q. The two half-brasses U, U¹, which embrace the shaft Q can be drawn close together by screws V, V¹; the bolts W, W¹, which pass through slotted holes, being temporarily unscrewed to allow of this adjustment.

The apparatus is stopped or started by shifting the bands P, P¹, to the loose or fast pulleys. For this purpose X is a hand-lever turning on the fulcrum X¹, and connected at its lower end to a sliding bar Y, which carries two pins Y¹ for shifting the strap P¹; Z is a similar bar carrying two pins Z¹ for shifting the strap P; *a* is a lever pivoted at *a*¹ in its middle, one end of which works in a slot in the sliding bar Y, and the other end in the sliding bar Z. Thus by moving the hand-lever X the straps P and P¹ are shifted together.

According to the fineness or coarseness of the material to be acted on, the radial bars should be placed close together or farther apart to attain the desired action.

If it is desired to use this machine as a mixer or conditioner for different kinds of pulp, it is only necessary to feed the requisite proportions of pulp into the feeding inlet, and after passing through the machine they will be found to be thoroughly mixed and in good condition for the paper machine.

Paper-making Machine.—Fig. 6109 is a longitudinal section of a paper-making machine, as made by G. Tidcombe and Son, of Watford. Such a machine is capable of producing 5 tons of printing paper in twenty-four hours, but the amount of work performed varies according to the quality of paper required and the nature of pulp employed. Pulp being made of the required consistency, is stored in a reservoir conveniently placed near the strainers A, A. It is there mixed with a sufficient quantity of water to hold the pulp fibres in suspension, and cause it to flow freely into the knotters or strainers A, A. The pulp passes through the sieves, leaving behind it all knots and impurities. In old-fashioned machines the pulp merely passed along over the knotters, and was shaken through, leaving the knots on the surface, and the slits or spaces soon became choked. In order to clear them they were scraped, and much of the refuse was thus forced through the machine into the clear pulp beneath, and passed along with it to the paper-making machine. This operation had to be performed every two or three hours; thus much dirty and inferior paper was produced, and no regularity in quality could be obtained.

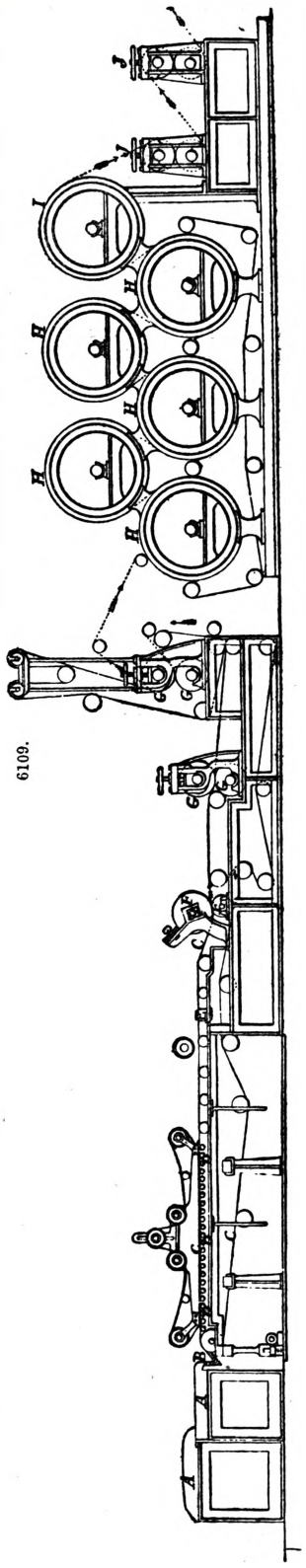
6109.

W. Ibotson, an English paper-maker, invented the strainer, now in universal use; this machine, shown at Fig. 6110, avoids all waste of pulp and irregularity in the quality of the paper

by its ingenious arrangement. The strainers are kept clear by the flow of the pulp, which washes all knots over the slits till they pass away at the outlet-pipe into a vat at the side of the apparatus,

6110.

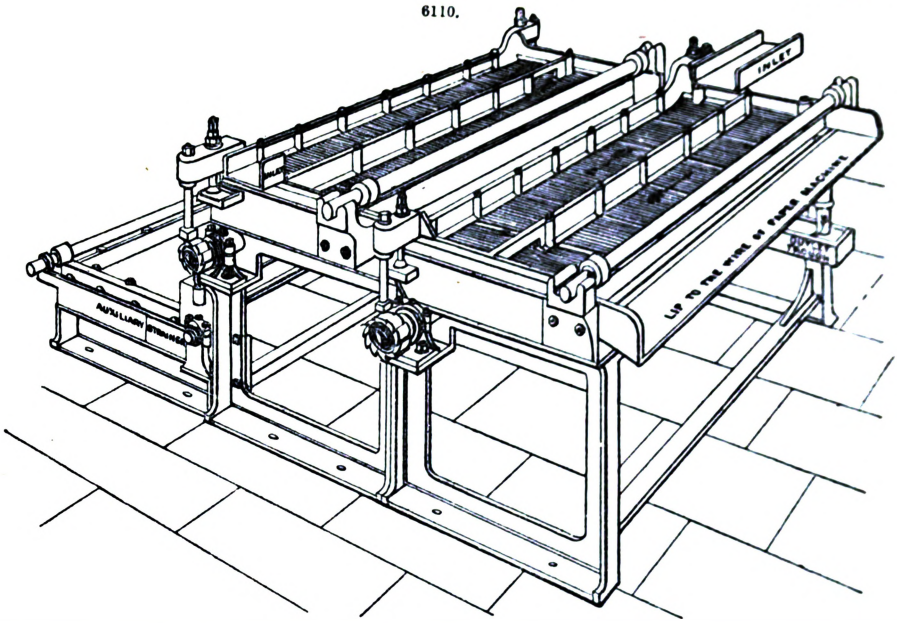

whilst the clean stuff runs directly through the slits, and thence to the lip of the paper-making machine B.

The stuff is thence led over the travelling web of wire cloth C C C, Fig. 6109. This endless web runs over the small rollers or table D D D, and the vacuum-box E; this has a top of gutta-percha or vulcanite, or such material as will not wear the wire cloth, and which can be pierced with suitable holes through which water can be drawn. This box is in communication with a set of exhaust-pumps which draw the water from the pulp above the wire web, and this is the first process of extracting water from the stuff, excepting that which runs from it between the rollers D, D, D. The pulp or fibres are thereby felted together and form paper in a wet state.

During the passage of the stuff farther on, it will be observed that it passes between the rollers F, F. These rollers press it while on the wire, and this pressure is a further process of drying the wet paper by squeezing more water out of it. It receives another pressure in the same manner at G, G, and here the Fourdrinier paper-making machine really terminates.

The paper has next to be dried, and the speed and accurate timing of this portion of the apparatus regulates the quantity and quality of the paper produced; if the cylinders are driven too quickly, the fibres will not be well felted together, the paper will be too wet, and all the care employed in the previous operations will be thrown away.

A web of paper contracts in drying, and the amount of contraction must be allowed for in the proper graduation of the diameters of the drying cylinders, particularly if the stuff is composed of some of the new materials, such as straw, esparto, or wood. Rag-paper is not so variable as paper made from these new materials, because it has more elasticity.

The paper is conducted round the iron cylinders H, H, by travelling webs of felt, which sustain it and cause it to hug them so as to give an ironing effect—similar to a woman ironing linen—during the process of drying. These cylinders are about 4 ft. in diameter, and are heated by steam-pipes at their centres, which pipes are stationary, and the cylinders revolve round them. The pressure of steam is graduated by suitable feed-valves, giving generally most heat to the last cylinder I.

After drying the paper that is to be made for printing purposes, it is passed through polished iron calenders or glazing rolls J, J, to be glazed, and from thence to be reeled ready for the machine to slit and cut it into sheets. But if the paper is to be used for writing purposes, it is necessary to pass it through a bath of animal size or glue immediately after it leaves the drying-machine cylinders. This animal size gives it a parchment character. After passing through such a bath, it has to be dried gradually by hot air and fans instead of passing over hot-iron cylinders, so as to prevent curling or wrinkling, which such paper is liable to if dried too quickly.

Fig. 6111 is an enlarged view of the press rolls seen at G, G, Fig. 6109.

Fig. 6112 is a sectional view of the arrangement of the drying and cooling cylinders adopted by G. Tidcombe and Son. By the arrangement of graduated and properly-fitted cylinders for these operations, much waste, in the form of broken webs of paper, is avoided.

When more cylinders are used, some of them fitted with movable doctors, there is a great diminution in the destruction of felts. More drying surface also enables more paper to be made with the same amount of skilled labour, and the machine-men work better with the increased facilities.

The cylinders are regulated to precision, whether fitted with circular frames or otherwise, and the system of steam feeding is equal and certain. The scoups for emptying the cylinders form part

of the cylinders themselves, so that they cannot get loose, and cause danger and annoyance, and their fittings have ample room to discharge the condensed steam.

Cooling Cylinders and Electrical Dischargers are made of thin metal, and are charged with cold water, a current of which is always running through them. One cylinder is generally enough for a paper machine. It has much effect in cooling the paper, and freeing it from electricity. The paper also at once receives its normal state of atmospheric moisture. The cylinder is placed after the last set of dryers, and is about 3 ft. in diameter. The temperature can be regulated to the degree required, thereby also regulating the moisture on its surface, and still retaining its quality as an electrical conductor.

Fig. 6113 is an elevation of Tidcombe's paper-machine glazing rolls. The glazing rolls are cast of the best iron, and are then turned and ground together perfectly. Several rolls are cast at one melting, and after turning they are selected to match each other. The steam pipes and glands are of brass, of ample strength.

Press Rolls, Breast and Couch Rolls, are made of sound brass, entirely superseding soft copper rolls and uneven joints.

6111.

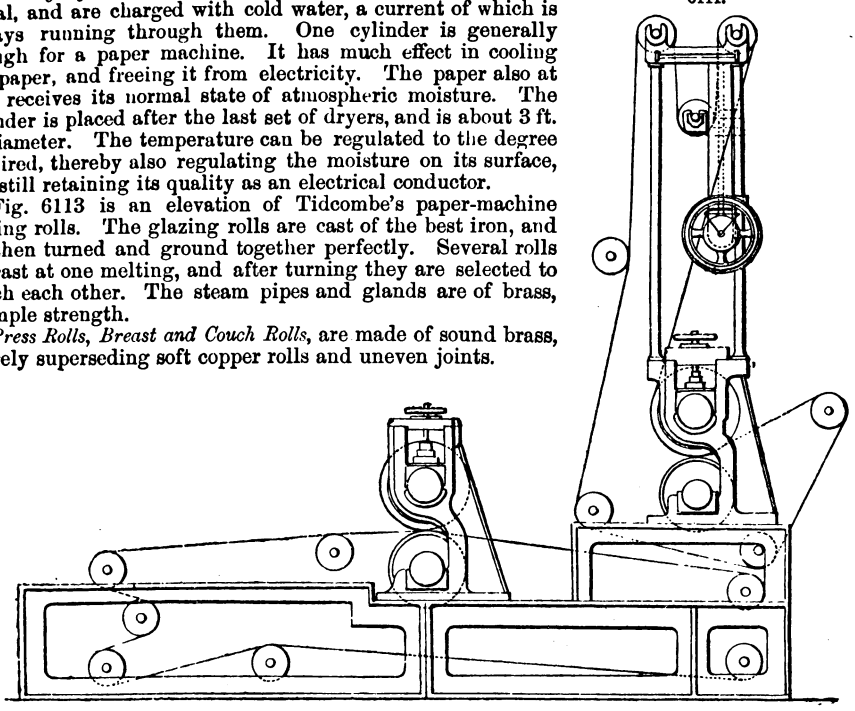

6112.

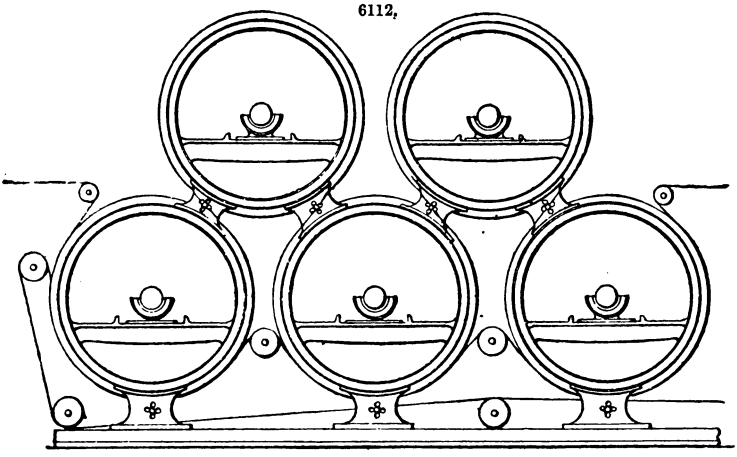

Iron Felt Rolls.—These should be made as light as possible, and properly fixed in their spindles to keep them from getting loose.

Guide Rolls, for guiding the wire, or for reeling the paper solidly and truly on the reels, should be properly proportioned and evenly made of brass, having adjusting carriages and screws.

Tidcombes have introduced several improvements in their press rolls and accessories. They cover the press rolls with brass, and the upper ones have movable doctors, as shown on the section, Fig. 6111.

Fig. 6114 is of a reversible rolling and glazing machine, also by G. Tidcombe and Son. In this efficient machine much time is saved by the use of reversing gear; and as the latter is placed at an angle, the pack of paper is more easily fed into the rolls than in ordinary machines. The levers and weights are self-adjusting, and when extra pressure is required the machine can be fitted with another pair of compound levers having their weights near the ground.

Paper-cutting Machine.—Paper can be cut very economically and in a regular shape during its making, in several widths; it is sufficient to interpose between two of the drying cylinders, as in Figs. 6115, 6116, three, four, or five pairs of mechanical scissors, formed of double discs, *af*, *bg*, and so on, sharpened with circular barrels, and rubbing on their flat sides. Each pair of discs effects a rectilinear section as the sheet of paper passes between them. A, B, C, D, Fig. 6115, are

shafts to which the cutting discs are fastened; E, E, standards; *o*, *m*, adjusting screws; and *x*, *y*, pulleys.

6113.

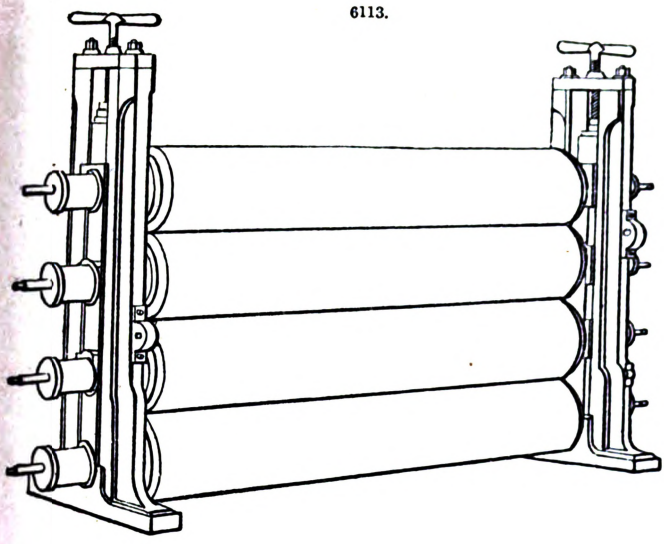

6114.

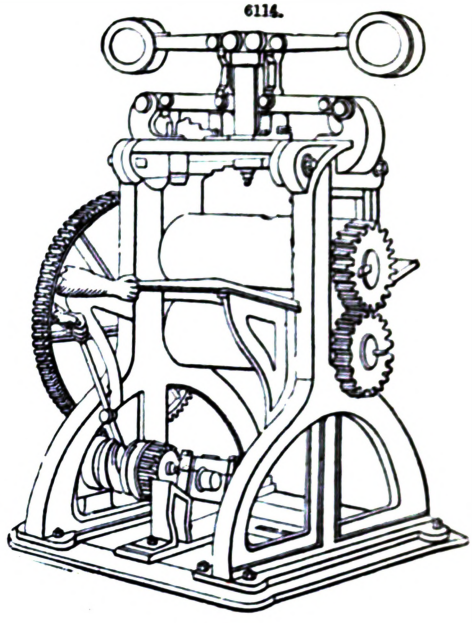

6115.

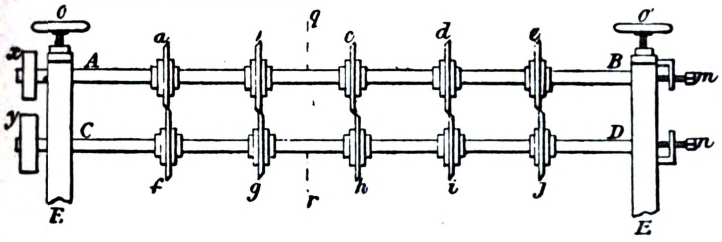

6116.

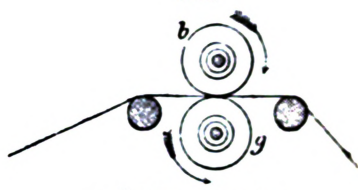

Section through q r

6117.

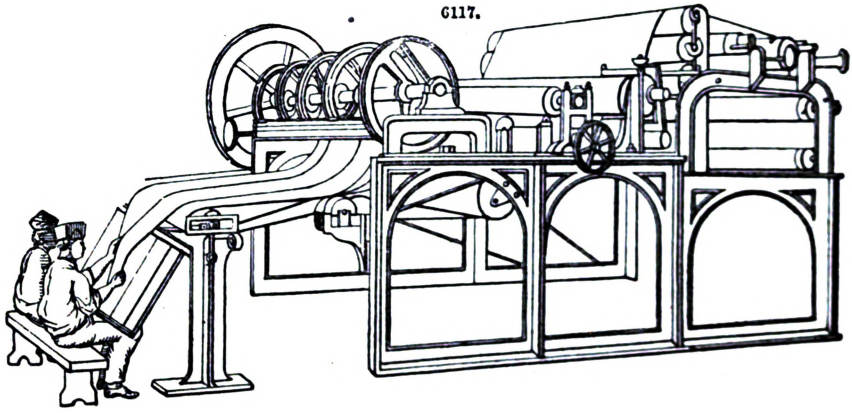

Fig. 6117 is an elevation of Tidcombe's detached paper-cutting machine. Its novel feature is the driving apparatus, consisting of short cone-drums, by which the lengths of the sheets of paper are regulated. By turning a hand-wheel one of the driving pulleys is expanded and the other contracted at the same time, thus giving double the range of speeds to the paper than by merely altering the diameter of one pulley. These alterations are made by the united movement of a right-hand thread on the shaft of one pulley, and a left on the other, in connection with cones that move into and expand the segments of one and retire from and contract those of the other. By thus altering the diameter of each simultaneously, a saving of time as well as paper is effected, and a less number of the ordinary change-wheels is required. They are driven by an *endless belt*, which works evenly.

Ibotson's Self-clearing Strainers.—Fig. 6110 shows two Ibotson's strainers, suitable for a 72-in. paper

machine. They are fitted with Tidcombe's hard-rolled toughened plates. The pulp enters at the inlets, one being shown on each side in this double arrangement. The pulp takes the direction indicated by the arrows, the finer portions, filtering through the strainers, proceed at once to the lip – to the wire of the paper machine; the knots, lumps, or impurities, are carried along by the current over one set of strainers, through the opening in the partition, and back along the other set of strainers, and pass down a pipe leading to the outlet-trough, and thence to the auxiliary strainer, placed at the back of the machine. The necessary motion or jog is given to the strainers by the ratchet-wheels keyed on the shaft under the machine.

It will be seen that with this machine there can be little actual loss of pulp, as the back-water from the wire, mixing with the knots and impurities in the outlet-trough, flows back to the auxiliary strainer, which separates all the remaining useful pulp, rejecting only the actual refuse.

The strainers can be easily removed to be cleansed, and as the plates are perforated with slits of different sizes, the machine can be made to act perfectly well with pulp of various kinds and qualities by changing the strainer.

Fig. 6118 is a section of one of Tidcombe's hard-rolled toughened strainer-plates. The angles of the grooves and depth of the slits have to be regulated with great nicety for various descriptions of pulp.

6118.

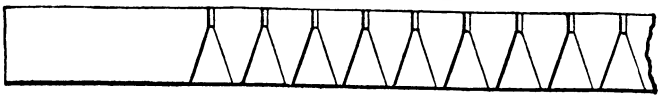

The increasing demand for paper, and the impossibility of obtaining sufficient rags, having drawn attention to the possibility of producing good serviceable paper from other materials, has thereby opened up a nearly new industry, to which every day some improvement or addition is being made.

Hitherto straw, esparto, and wood have been the chief raw materials employed, but doubtless other articles in the vegetable kingdom will ere long come into use for the manufacture of paper pulp. Naturally the demand for paper is greatest in those countries which are the most densely populated, where labour is expensive, and where wood, straw, or esparto are comparatively scarce.

Esparto, which is grown principally in the south of Spain and north of Africa, is every year getting more and more scarce. Norway and Sweden produce wood in abundance, and labour is also cheap there; the demand for paper for home consumption is limited; but mills have been lately erected in those countries, and large quantities of pulp are made for exportation from wood, both by Voelter's grinding process and by the boiling process with chemicals.

The greater part of the pulp thus made is exported as half stuff, that is to say, after it has been through the washing engine it is dried by centrifugal machines or presses, in separate layers or cakes, which are tied in bundles and packed for shipment.

On arriving at the paper factory these cakes are broken up, mixed with water, and thoroughly pulped in the beating engine, after which the pulp is passed over a strainer, and is ready for the usual paper-making machine, or it may be mixed with certain proportions of other and finer pulp.

Straw pulp is seldom used by itself, as it produces a very short, crisp, and brittle paper; but with the admixture of some rag pulp it is much used for the manufacture of printing paper. Nearly all the straw pulp used in England is of home make. The machinery employed requires no special notice, as the straw after being cut up is treated in a similar manner to rags, the only important variation being in the strength and quantity of the chemicals required for the boiling process.

In connection with the boiling of pulp at high pressure, the improvements recently invented by Edward A. Cowper must be mentioned, as their tendency to save time and fuel is indubitable. By his arrangement of feeding the pulp-boilers through intermediate boxes containing charges of hot-soaked wood, Cowper avoids the cooling down of the boiler, hitherto necessary after each boiling, whilst by the arrangement of the furnace he protects the boiler from the damaging effects of a fierce fire directly impinging upon a comparatively weak surface as hitherto practised.

Fig. 6119 shows a vertical section of a pulp-boiler and setting.

The pulp-boiler C C is set upright in brickwork D D with flues E, E, around it, so that the heat derived from a furnace F placed at a distance from the boiler may pass around the boiler till it enters the chimney E^1. There is but a very small portion of the brick-setting in contact with the boiler, so that there is no danger of the brickwork, if hot, burning the boiler if empty. The flue G G G, immediately on leaving the fire F is greatly enlarged, so that by the time the heat comes in contact with the boiler, the area it acts upon is many times the area of the fuel at the fire, so that the boiler is only subjected to a mild heat, such as it can well sustain without injury.

The time of filling and emptying a pulp-boiler generally occupies a considerable portion of the total time of working a charge, and the heating up of the contents of the boiler to the boiling point also occupies considerable time, and if the material is a compact material like wood, and has not been thoroughly soaked with caustic alkali before it is put into the boiler, much time is lost, as it takes several hours for the whole to become perfectly saturated, and this evil is exaggerated by any variation in the compactness of the material being acted on. In order therefore to fill and empty a boiler quickly, to charge it with materials as hot as possible, to ensure their being acted on equally, and to reduce the time that the materials must remain in the boiler to be thoroughly cooked, a number of perforated boxes K, K, are placed in such a manner that they may be guided down into the boiler into their proper positions when lowered down by a crane, and remain truly in position in the centre of the boiler, there being guides L, L, fixed inside the boiler for the purpose; the crane-chain N is provided with a spring catch to which a light chain or cord is attached, so that when a box has been lowered down, the catch, which takes hold of a cross-bar fixed in a central tube in the box, may be released conveniently, although at the time it may be quite impossible for the workmen to see at all inside the boiler in consequence of the steam.

Previous to placing the boxes K into the pulp-boiler, they are filled with the material to be

operated on, and are then placed in a soaking tank nearly filled with strong hot caustic alkali, where they remain some time until well saturated with the alkali after which they are conveyed

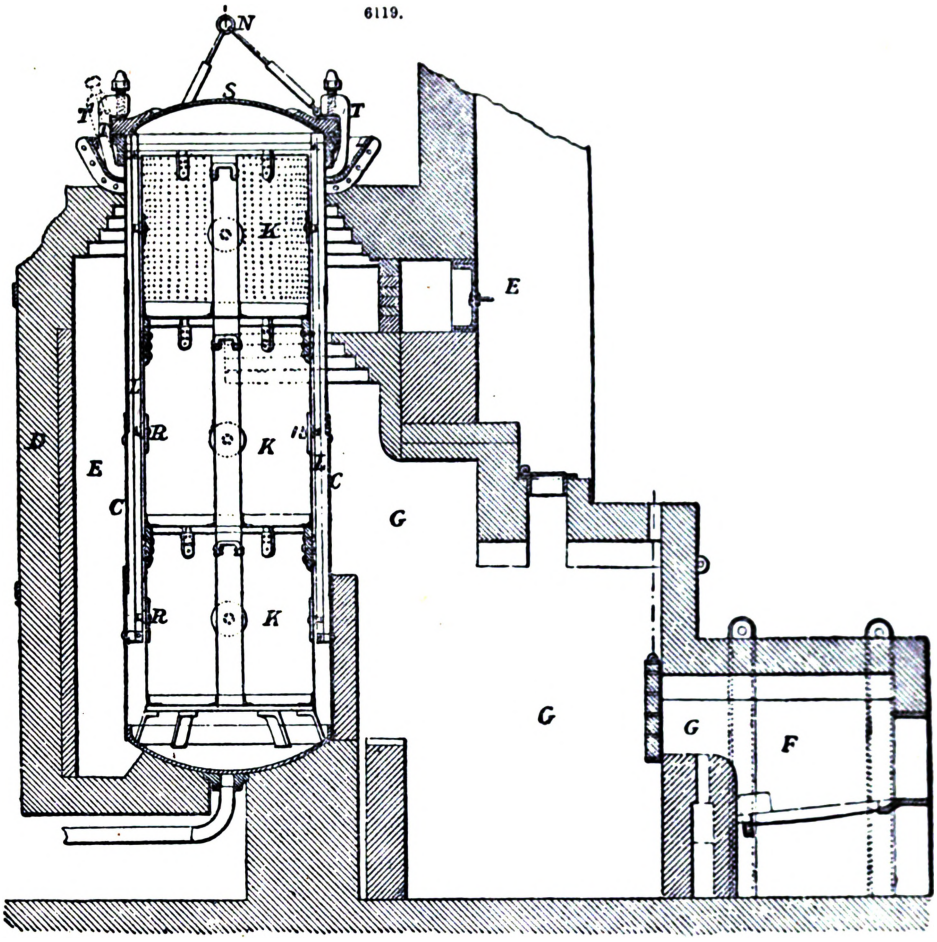

direct to the pulp-boiler C thoroughly hot, and ready for receiving the still higher temperature that they are subjected to when the boiler is closed and the cover screwed down tight, and heat is applied to the boiler, which is nearly filled up with caustic alkali, or water, or spent ley, and the valves of the boxes are kept closed until the whole has been raised to the required temperature, so that the caustic alkali may act on the material at the high temperature without dilution. The valves of the boxes are afterwards opened so as to allow the liquor in the boiler to circulate through the material in the boxes. The cover S of the boiler is secured by a number of screw-clamps T, T, to grip the top ring of the boiler and screw down on to the cover S, the lower ends of such clamps being retained in a recess to keep them in position, but allow them to fall back when unscrewed, as shown by dotted lines T^1.

The circulation of the liquor in the boiler is provided for by having a passage through each box, open at top and bottom, and leaving an annular space all round the inside of the boiler outside the boxes, in connection with a space at top and bottom of the boiler, so that there is a constant flow of liquor down the centre of the boiler to become heated, whilst the liquor in the space all round the inside of the boiler, on becoming heated, will rise upwards and flow over the top of the top box, and down the central opening, thus causing a constant agitation, and the liquor is continually carried from the bottom upwards between the boxes and the boiler, and prevents its being burnt, and the heat is more quickly taken up by the fluid and distributed more uniformly through the boiler.

F. B. Houghton's Process.—This invention has greatly facilitated the manufacture of paper pulp from straw, wood, and other vegetable substances, by the use of steam at a higher pressure than had hitherto been employed.

An alkaline solution is used of a strength equal to from 6½° to 7° or more of Beaumé, and heated in a suitable boiler to such a temperature as to produce a pressure of from 180 lbs to 190 lbs. on the square inch; less heat and pressure may be resorted to, when using the strength of alkaline solution above mentioned, but the same must be continued during a greater length of time. The strength of the alkaline solution may also be reduced to some extent, say to 4° Beaumé, provided the heat and pressure is greater, or continued for a greater length of time than is required when using a solution of 7° Beaumé. In constructing suitable boilers for these purposes, Houghton heats the contents by means of tubes in which hot water is circulated, according to the

system invented by A. M. Perkins, as by such means the process may be carried on more safely and advantageously

A strong cylindrical boiler is therefore used with hemispherical ends, the upper end being formed in such manner as to act as a movable cover, on which is a safety-valve; at the lower end of the boiler coils of wrought-iron tubes are introduced, suitably arranged to have highly-heated water circulated therein, by which the interior contents of the boiler can be more conveniently heated up to and retained at the high degree of temperature requisite than by any other system of heating. The matters to be treated are introduced into the interior of the boiler by means of a cylindrical basket or open metallic frame surrounded on all sides with strong wire gauze. The materials are packed into the basket in a succession of layers, supported on a series of movable partitions or circular frames of wire gauze, which are retained in position within the cylinder by pins or bolts passed through the uprights of the frame of the cylinder, and the same is lowered into the boiler, the upper end of which is then closed. The boiler is filled with the alkaline solution from a suitable cistern, and such solution may be introduced in a heated or cold state. The highly-heated water caused to circulate in the coils of tubes within the boiler will quickly raise the temperature of the contents of the boiler. A temperature varying from 376° to 380° of Fahrenheit, equal to about 175 to 185 lbs. on the square inch, and continued from ten to thirty minutes, according to the nature of the vegetable fibrous matters for the time being under process, are the best for general purposes. The time of the process varies according to the nature of the vegetable fibrous matters, and no more precise or exact rule can be given; but a workman will quickly become acquainted with the proper time for a particular description of vegetable fibrous matter; and it will only under any case be necessary from time to time to allow the apparatus and its contents to cool down, and to remove the cover, in order to ascertain whether the desired result has been obtained; but this will seldom be necessary after some practice, and principally when for the first time acting on some vegetable fibrous substance not previously treated.

An apparatus, the invention of M. H. Voelter, has come into use for the manufacture of pulp from wood. The principle involved is the grinding of pieces of wood into a pulpy condition, by forcing them against revolving grindstones; and although the pulp thus obtained is of less commercial value than that prepared by the chemical process, the machinery has been largely adopted for the manufacture of stock for such papers as do not require a very fibrous substance.

Fig. 6120 is a sectional elevation of Voelter's apparatus. The grinding surfaces consist of natural or artificial stone, and may be set horizontally or vertically, and the pulp may be introduced at either side, as desired, only in order to grind wood the stones must be well cut, and so set as scarcely to touch each other, so that the fibres may not be reduced to powder. In order that the coarse fibres contained in the pulp should not prove injurious to it, it is conducted to the sorting apparatus.

Under the rotary pulper or stone S is a vat K, in which the mixture of fibres of wood and waste are collected; an iron rake R in this vat seizes the splinters and larger refuse pieces, in order that these latter may not be driven against the frame E, which is mounted at the opposite side, and is provided with a fine sieve, which the splinters might damage. The useful fibres are washed from the rake by means of water supplied from a pipe G.

To effect the immediate assorting of the fine fibres, the curved incline D and sieve-frame E are adapted to the apparatus. Upon this sieve-frame E is stretched brass-wire gauze of the required degree of fineness. The rotary motion of the stone throws the mass of fibres contained in the vat K over the inclined plane D against the sieve-frame. The large fibres which cannot pass through run down into the refining apparatus, whilst the fine fibres, which have passed through the sieve, run direct into the pulpy mass coming from the refining apparatus in order to be there diluted.

In Voelter's first arrangement the space in which the pieces of wood to be ground into fibre are deposited was formed of plates of iron raised against the middle of the stone, so that the space became narrower towards the bottom, which frequently caused the blocking of the feed aperture by the pieces of wood, and impeded the feeding operation. This defect is remedied by substituting for the transverse plates wedge-shaped plates Q, so that the two sides of the space are parallel to each other.

By forming the wooden pressers P as inclined planes, which rise from the middle to the front, the formation of wedges by the wood being ground is prevented. Above the wooden pressers are india-rubber buffers or steel springs, enclosed within iron sockets, the pressure of which corresponds to the normal pressure; and when this is exceeded, the rubber buffers give in a corresponding degree, so that neither the stone nor the machine is exposed to injury from any shocks or sudden strain. The iron socket H, which encloses the buffers, and which is screwed upon the pressing wood P, is provided with a cover, maintained in place by means of screws, these latter serving at the same time to regulate the pressure of the buffers. On a greater resistance taking place from below, it will act first against the pressing wood; this transmits the pressure to the buffers, which are thus more forcibly compressed, so that the socket will project above the cover, whilst the screwed rod *d* does not alter its position or action; there is therefore in the pressing wood a corresponding portion cut away for this latter.

To maintain a regular working of the grinding apparatus and to feed it conveniently, according to the surface of the wood to be operated upon, or according to the motive power, in order to be able to increase or decrease the speed with which the pressers move against the stone, a regulating apparatus is applied to the back of the machine, consisting of two cones *d* and d^1, and a guide-rod *s*, with a fork *f* and roller *p*. The cone *d* receives its movement directly from the main driving shaft, and communicates it to the cone d^1, the shaft of which actuates the different driving pulleys of the shafts by a band passing over and under them. According to whether the attendant turns the hand-wheel *h* from left to right, or *vice versâ*, the feed becomes weaker or stronger.

After leaving the pulping apparatus, the half stuff is carried through an assorting arrangement, consisting of vats provided with sieves, to which an oscillating motion is communicated by cams.

The pulp is then raised by an elevator, and passes between a pair of horizontal grindstones, which remove any remaining inequalities.

6120.

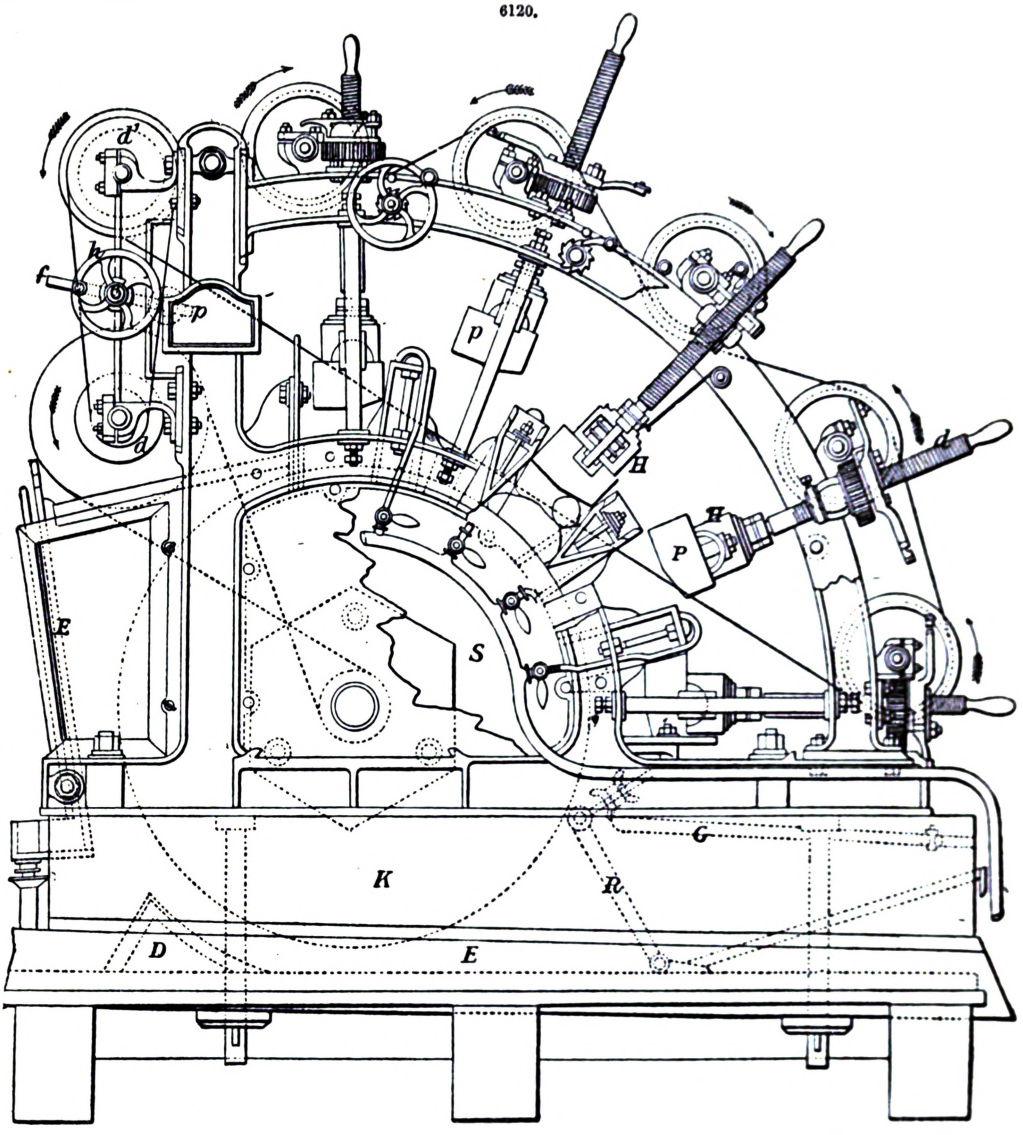

Sinclair's Evaporator.—By distilling and evaporating the spent ley resulting from the preparation of wood or other fibrous substances employed in the manufacture of paper stock, the oils, turpentine, soda-ash, or other substances contained in the ley, are recovered for useful purposes.

After the wood or other fibrous substance has been treated by boiling it in the ley, the hot ley and steam are blown into a vessel placed in a tank, having a water-tight division or partition connected both to the central part of the tank and the central part of the vessel. This tank is filled up with liquor, which may consist of new ley in one compartment of the tank, and water in the other compartment, so that the vessel contained in the tank is thus immersed in the liquor, and receives heat from the hot ley and steam blown into the vessel from the boiler. In this manner hot water is obtained for washing the pulp in the boiler, and hot liquor is provided for the next charge of the boiler, thereby saving time and fuel. The spent ley, after having thus parted with its heat, is discharged from the vessel into a distilling apparatus, when the oils and turpentine are taken off; or the spent ley may be taken direct from the vessel to the evaporator, which consists of a shaft or tower containing one or more winding flues. At the lower part of the shaft or tower two hearths or roasters are situated, having a division wall between them. One end of each hearth is connected to a furnace. Between the furnaces and hearths are two chambers; that nearest the furnace being a mixing chamber or smoke-burning chamber, whilst the other is a chamber for receiving the flame from the furnace and distributing it to the hearths or roasters. Hollows are formed in the wall between the chambers, and in those constituting the upper parts of the chamber through which the air for maintaining the combustion is supplied, and thereby becomes heated. When using the evaporator the furnaces should be fired alternately, so that when smoke is issuing

from one furnace a bright hot flame issues from the other furnace, and both enter the smoke-consuming chamber, when they mix with the required quantity of hot air for their combustion. At the top of the tower a tank is situated for holding the spent ley which is to be evaporated, with a chimney passing up through it or near to it, containing a steam jet for the purpose of producing an upward current and a partial vacuum in the winding flues of the evaporator, thus aiding the evaporation and causing the products of combustion, steam, and fumes to pass over the roasting ash and boiling ley in the hearth and flues up through the chimney and into the atmosphere. When the spent ley is ready for evaporation, it is discharged from the tank into the winding or spiral flues, down which it travels until it reaches the bottom, where it enters the roaster or hearth, and it is then stirred up and roasted by the heat from the furnaces until ready for being withdrawn.

Fig. 6121 is a longitudinal vertical section of the first part of the apparatus; it consists of a

6121.

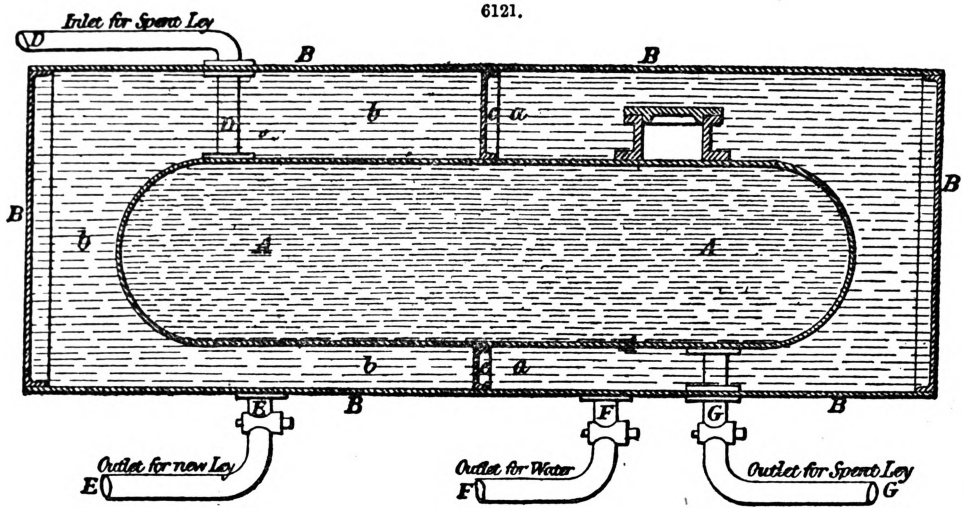

vessel A, of a cylindrical form, situated in an oblong tank B, divided into two compartments by a water-tight partition C, connected to the central parts of the tank B and of the vessel A, as shown. Both divisions of the tank B are filled with liquid, water being introduced into the compartment *a*, and new ley into the compartment *b*, so that the vessel A is entirely submerged in liquid. The vessel A communicates by a pipe D with the boiler in which the wood or other substance employed in the manufacture of paper stock is treated. After the fibrous substance has been treated in the boiler, the hot ley in which it has been boiled and the steam are blown through the pipe D, into the vessel A, where the heat given off in cooling one charge of the spent ley is utilized in heating the fresh or new ley contained in the chamber *b* of the tank B, previous to another charge of the said new or fresh ley being conducted through the pipe E into the boiler, where it, together with the wood or other fibrous substances, are boiled. In this manner hot ley is provided for each new charge of the boiler, thereby saving time and fuel. Previous to introducing a fresh charge of ley into the boiler, or to removing the wood or other pulp left therein after the spent ley has been drawn off into the vessel A, a stream of water from the chamber *a* of the tank B, which has also become heated by the cooling of the spent ley in the vessel A, is conducted through the pipe F into the boiler, in order that the pulp contained therein may be thoroughly washed before it is removed from the boiler, and also that the boiler itself may be washed out before the fresh charge of ley and of wood, or other fibrous

6122.

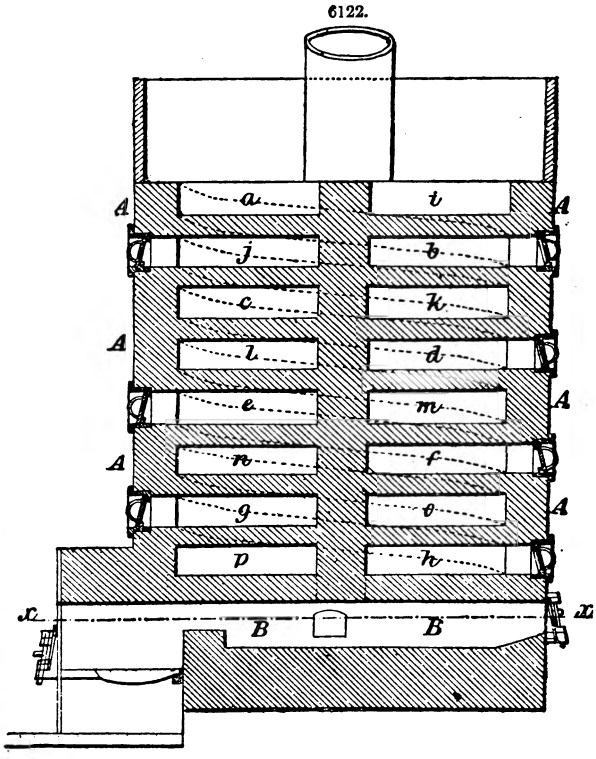

substance, is introduced. After such washing of the pulp and of the boiler is effected, the water is run off through a cock in the bottom of the boiler, and the pulp may then be removed. The spent ley, after having parted with its heat to the new ley contained in the chamber *b*, and to the water contained in the chamber *a* of the tank B, is discharged through the pipe G into a distilling apparatus, which may be of any ordinary type of still, wherein the ley is kept at a temperature sufficient to drive off from it the volatile matters, such as oils and turpentine, contained therein.

6123.

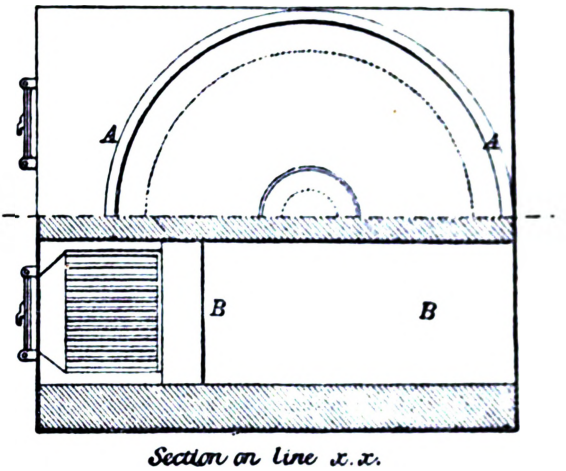

Section on line x.x.

Instead, however, of first distilling the spent ley, it may be conducted direct from the vessel A to the evaporating apparatus; tower or shaft may be of a square form, oval, or circular.

Fig. 6122 is a vertical section of a circular evaporator; Fig. 6123 is a part plan and part horizontal section of the same on the line *x x*. The flues through which the spent ley travels on its course to the hearths or roasters B are arranged spirally in the interior of the tower A, as shown by the dotted lines; the flue which commences at *a* winds round to *b*, thence to *c*, *d*, *e*, *f*, *g*, and terminates at *h*, where it discharges on to the hearth or roaster B, and the flue commencing at the upper end of the tower A in the position marked *i*, winds round by *j*, *k*, *l*, *m*, *n*, *o*, and *p*, and discharges the ley on to the other hearth or roaster B, from whence the ash, after having been sufficiently dried and roasted, is removed through side doors. When the spent ley is ready for evaporation, it is conducted to the tank on the upper end of the tower A, whence it is discharged into the winding flues, down which it travels until it reaches the bottom of the tower A, where it it discharged into the roasters or hearths B, B, and is then stirred up as required, by an attendant inserting an agitating instrument through the side openings, and roasted by the heat from the furnaces until the ash is ready to be withdrawn. The ley as it passes down through the flues is partially evaporated by the heat and waste products of combustion passing over it up through the flues on their course to the chimney. Sometimes a jet of high-pressure steam is introduced into the chimney at the lower end, which, blowing upwards, causes a partial vacuum in the flues, facilitates the draught of the furnaces and the evaporation of the ley, and also aids in drawing off the products of combustion, steam, and fumes of the roasting ash and boiling ley in the hearths and flues, to the chimney. The flues of the tower or shaft A are provided at each turn with traps or doors, that they may be easily cleaned out as required.

PARALLEL MOTION. Fr., *Parallélogramme de Watt*; Ger., *Watt'sche Parallelogramm*; Ital., *Paralellogrammo*; Span., *Movimiento paralelo.*

See Details of Engines.

PAWL. Fr., *Déclic*; Ger., *Sperrhaken*; Ital. *Nottolino*; Span., *Lingüete.*

A pawl or paul is a short movable piece or bar connected at one end by a joint with some part of a machine, while the other end falls into notches or teeth on another part in such a manner as to permit motion in one direction and prevent it in the other, as in a capstan or windlass.

PENDULUM. Fr., *Pendule*; Ger., *Pendel*; Ital., *Pendolo*; Span., *Péndulo.*

See Gunnery.

PERMANENT WAY. Fr., *Voie permanente*: Ger., *Beständige Befestigung*; Ital., *Binario permanente*; Span., *Via.*

The permanent way of a railway may be described as that portion of the line which is last constructed, which directly supports the whole weight of the rolling stock, and is, in consequence, subjected to the greatest amount of tear and wear. The term permanent is used to distinguish it from the temporary way or road, which the contractor usually lays down for his own use, during the construction of a line of railway. In the laying down of this temporary road, he must find his own rails, sleepers and fastenings, as he is not permitted to use those belonging to the company, which are intended to carry the traffic of the completed line. When his own road has answered its purpose, he proceeds to remove it, and lay down that of the company, and hence the application of the term permanent way in contradistinction to that of temporary.

The permanent way consists of rails, sleepers, chairs, transoms, ties, bolts, spikes, and such other minor accessories as may be necessary to connect the several component parts, and ensure the stability and rigidity of the whole road.

Generally speaking, all descriptions of permanent way may be classed under one of two heads. Those in which the rails are supported by sleepers continuous throughout their entire length, and those in which the sleepers are placed at intervals along the same length. Briefly, these may be termed the longitudinal and the transverse permanent way. In some isolated instances sleepers have been dispensed with, and the rails laid upon the naked ballast, but this method, which will be noticed in its proper place, has had a very limited application in practice. Under the second general classification of permanent ways, are included all those in which, although the sleepers cannot be correctly called transverse sleepers, yet they certainly do not come under the category of longitudinal ones. Of this type are the many varieties in which the rails rest upon

iron sleepers, which do not extend across the road or track, but, while spaced at regular intervals, each one is connected with its opposite fellow by a transom or tie-rod. To this description belong the different iron roads, as well as some of a very primitive class, in which the sleepers consisted simply of large roughly-squared blocks of stone.

Before proceeding to describe the principal systems of permanent way adopted on our leading railways, as well as on those on the Continent, and elsewhere abroad, it will be advisable to direct attention to the essential component parts of the road, and the particular functions which they have to perform. Evidently while we have classified all the various descriptions of roads under two general heads, there are numerous subdivisions so far as the component parts are concerned. Some roads dispense with chairs, others with sleepers, and the modifications which the joints and fastenings undergo are well-nigh infinite.

The permanent way is always laid in good ballast whenever it can be procured, and when it is not to be obtained, the best substitute is employed that is available. For further information on the subject of ballast, and the laying of the permanent way, the reader is referred to 'Ballast' and 'Railway Engineering.' In addition to the actual component parts of the permanent way, there are several details which inseparably belong to it, which will be described in the present article. Of this character are points, crossings, junctions, and switches. On many of our main lines, the points are connected with the signals in such a manner that they cannot act independently of one another. These will be found more particularly mentioned under the head of 'Signals.' Under its own title, will also be found 'Turn-tables,' which, if not strictly belonging to the present subject, is very closely connected with it. It will be seen as we proceed, that with the exception of the total abandonment of the stone sleeper or block, very little radical change has been effected, although numerous modifications have been introduced in the permanent ways of railroads. Thus, iron sleepers are employed in countries in which the ravages of the white ant preclude the use of the ordinary timber, which is there procurable, whether chemically preserved or otherwise. Rails are every year becoming heavier and heavier, and steel is on several important lines fast superseding its predecessor, rolled iron, in order to afford a sufficient degree of resistance and durability, to the ever-increasing requirements of the massive locomotives which are now built.

There are several qualifications indispensable to every system of permanent way. Each system must be fixed so securely that the gauge cannot alter. It must maintain a horizontal position in the plane of its cross-section, except in the case of curves. There must be no unevenness in a longitudinal direction, or the progress of the train would be attended by a constant succession of jumps and blows, which would seriously augment the friction and prove very detrimental to the axles and springs. The friction between the wheels and the rails should not be more than what is sufficient to afford the necessary amount of tractive adhesion. So far as the rails are concerned, they must be strong enough between the bearings, or points of support, to carry the heaviest load which can come upon them, without undergoing any deflection of importance. In every permanent way, there must be a certain amount of elasticity, so as to absorb or render inoperative the impact between the wheels and the rails. Without this essential feature, the rolling stock soon gets knocked to pieces. The road, considered as a whole, must be so constructed as to admit of being easily repaired at any part, readily packed, removed, replaced, and well drained. Every system or description of permanent way, and their number is infinite, fulfils several of these conditions more or less perfectly, although it would be perhaps too much to assert that any one fulfils them all thoroughly. Besides, some systems are not so well adapted to certain circumstances as others. For example, in countries in which the white ant is found, it is preferable to use iron instead of timber sleepers, owing to the ravages committed by those insects on wood of every kind. It is, however, stated as a fact, that white ants rarely attack timber sleepers, over which trains are constantly running. It appears that the vibration destroys them, before they can effectually establish themselves in the wood.

While numerous minor modifications have been introduced from time to time in the permanent way of railways, without much apparent reason, it will be found that those which are deserving of attention, have been the result of considerable experience and knowledge of the especial characteristics which constitute a really good, sound, and serviceable road. A little consideration of the nature of the original type of permanent way, and of the reason for its being abandoned, will enable the reader to form an accurate idea of the chief points which must be attended to, in order that a permanent way may adequately fulfil the duty demanded of it. This primitive type, shown in cross-section in Fig. 6124, consisted of stone blocks about 2 ft. × 2 ft. × 1 ft. in depth. The rails were laid in cast-iron chairs. The description of stone used depended upon the locality. The blocks were laid sometimes square to the road, with spaces intervening, and at others, diagonally, with the corners almost in contact. They were in most instances bedded in ballast, but frequently rested on the formation level without either ballasting or boxing.

6124.

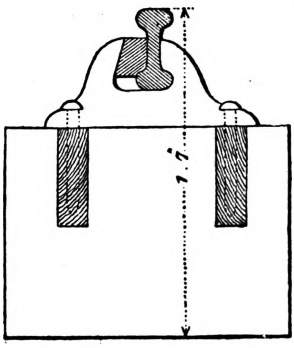

In this original system of permanent way, the ruling principle was solidity, and it was never considered at the time that a road might be a great deal too solid. With this object in view, the chairs, which were of cast iron, were very accurately fixed in the stone blocks, and fastened to them by a couple of spikes. The latter were driven into oak treenails, which were inserted in holes in the blocks, having a depth of about 6 in. It is to be noticed here, that there was no elastic medium of any kind between the chair bed and the stone sleeper. Consequently, after a short time, the chairs became loose and cut into the blocks, which con-

tingency was expected to be obviated by introducing a layer of felt between the chair and the block. This attempt proved a failure, and the evil was, if anything, increased.

In order to test the value of a perfectly rigid unyielding road, and to determine whether it was adapted for the purpose of a permanent way, a very crucial experiment was carried out on part of the Leeds and Manchester Railway. A portion of the solid rock, the nature of which precluded the idea of any subsidence or yielding taking place, was levelled, and the cast-iron chairs were fastened to it, in exactly the same manner in which they had been laid on the stone blocks. The result was a road so hard and unyielding, that it was idle to think of running over it, as, independently of other considerations, it was ruinous to the rolling stock. Moreover, the discomfort to the passengers from the continual noise was unendurable. This unsuitability of a perfectly rigid road was also demonstrated by another experiment, in which the chairs were laid on continuous walls of masonry. These experiments proved that some elasticity in a permanent way was absolutely necessary to the proper fulfilment of its duty, and their result was the general abandonment of the stone blocks, and the substitution of timber for stone. It has been well pointed out, that instead of dispensing altogether with the stone blocks, they might have been advantageously employed as a foundation for the timber sleepers, and had they been placed as suggested by W. B. Adams, in rows so as to form a continuous support, a very good road would have resulted. The noise which was occasioned when the chairs were placed on the stone sleeper, was due to the deflection of the rail, and the rising and falling of it on the chairs upon the blocks. It must not be supposed, because there is no noise of this description on the timber-sleeper roads, that there is no deflection of the rails. The contrary is proved by the slush which exudes from underneath the sleepers in wet weather, and by the whirlwind of dust which in dry weather marks the progress of an extra fast train. The necessity for packing sleepers is also a corroborative proof.

Timber selected for sleepers should be sound and well seasoned. In many instances inferior descriptions are selected, and dependence is placed upon the chemical solution with which they are impregnated, for increasing their durability and powers of resistance. The light and cheaper kinds of timber absorb more readily chemical preserving solutions than the better and firmer sorts, and are to a certain extent benefited by the preservative process. Of all woods oak is the best, but the expense debars it from being used. Experiments have proved that spikes hold with twice the force in oak than in other woods. The dimensions of sleepers, the distance at which they are placed apart, and their form, vary with the description of permanent way adopted, the different varieties of which will be illustrated in the present article. The chief object of a sleeper is to give a firm bearing upon the ballast or road proper, and at the same time to afford a sufficient base or bed for the rail. The tendency of the rolling load upon the sleepers, is to force them all down and cause them to sink into the roadway, and to prevent this, a considerable amount of bearing surface upon the road is necessary. Sleepers occasionally act as ties, but their use in this manner is objectionable, and tends to encourage the idea that their proper duty is to keep the gauge of the line, which is not the case. Tie-rods should always be used to discharge this duty belonging to the permanent way. If the dimensions of the sleepers are unequal, those which are smallest will yield first under the rolling load, and thus the whole road will get out of level. When stone sleepers were used, which made a most uncomfortably rigid road, and were consequently totally abandoned, those which happened to break were sometimes replaced by wooden ones, but the road at once became dangerously uneven, and the difference in their power of resistance was so great that it was found impossible to employ them together. If sleepers all of the same material, but of different dimensions, must be used, those which are smallest should be spaced closer together than the larger ones. On the whole, it would be better to use sleepers all of one dimension, even if they were small, than some of small and others of larger size.

There can be no really good permanent way without ample bearing surface being provided for the sleepers. In France, the experiment was tried of sawing the sleepers in two at the middle, and leaving one whole one, here and there, to bind the whole road together. The object of this was to nullify the spring of the ends of the sleepers, which deflect at those points under the passing load, and disturb the ballast and boxing in a manner which very much deteriorates the road. It was with the same object in view that Brunel had a part of the permanent way on the Great Western line piled, but the plan was soon abandoned. In Austria, where the timber is valuable, wooden sleepers are sometimes planed, which not only improves the bearing surface, but prevents decay. The operation may be an improvement, but one which would scarcely pay in a country where labour is as dear as it is here. Where the single-flanged, or contractor's rail, as it is termed, has been laid, the sleepers are sometimes grooved by machinery to form a bed for the rail. This helps to keep the road in gauge, but, on the other hand, it weakens the sleeper, and facilitates the lodgment of water, which accelerates the decay of the timber. Probably, the principal cause of the deterioration of wooden sleepers is the crushing of the wood under the rails, that is, in the rail bed. An insufficient description of fastening, want of proper bearing surface on the rail bed, and want of adequate bearing of the sleeper upon the ballast, are the chief reasons for this deterioration. It is a common circumstance to witness, on a poorly-ballasted line, or where the width of the sleeper is too small, the sleepers quite loose, or only held together by their fastenings with the rail. Directly a train passes, the loose sleeper is violently driven down as if by a blow. No amount of chemical preservation will prolong the life of a sleeper which is subjected to treatment of this kind.

Much has been said with respect to the relative merits of the transverse and longitudinal sleeper roads, but the former, with a few exceptions, is that generally adopted. The advantage of the latter is, that it certainly gives an easier road to run on, and favours the life of the rolling stock, but it is a more expensive one to maintain. It, moreover, is not so easily drained as its rival. This latter is a serious disadvantage, as efficient drainage is one of the essential characteristics of a good permanent way.

Bearing Surface of Sleepers.—The ordinary sections of timber sleepers are shown in Figs. 6125 to 6128. When rectangular in shape, and placed transversely, their usual dimensions are, for the standard gauge, about 9 ft. long × 10 in. wide, × 5 in. deep. Originally they were 7 ft. × 4 in. in section, and laid 5 ft. apart, but they are now placed at distances of 3 ft. apart, and are often 12 in. × 6 in. cross-section, and there is an additional sleeper at each joint in general practice. The triangular sleepers in Fig. 6128 were first used on the South-Eastern Railway thirty years ago. They were formed by a square balk being diagonally divided, so as to cut out four triangular sleepers, which were laid with the apex downwards. These have as much bearing surface as sleepers of twice the cubic content, cut out as a half balk in the usual manner.

In the longitudinal system the bearing of the sleeper on the ballast is not less than 12 in., and the depth 6 in., but on the Great Western and some other lines upon which it is used, these dimensions are increased to 14 in. and 7 in. respectively. The quantity of timber used in the transverse system, with four intermediate sleepers to each length of rail, is not quite 16 cub. ft., while in the longitudinal it is rather more. With nearly the same quantity of timber, the bearing surface on the transverse system will be about 12 in., and in the other about 1 in. more. But in the latter, as the depth of the sleeper is 1 in. over the whole surface, the additional quantity of timber is nearly 3 cub. ft. Since the quantity of timber is nearly the same, and as the cost of the rail fastenings may be considered equal, the total cost of the two systems should be the same. One reason why the transverse system was for a long time regarded as the cheaper, was because on many lines the sleepers were inferior both in size and quality to those used on the longitudinal road. The latter requires timber of larger scantlings and better quality than the former.

The longitudinal system, although continuous, by no means prevents deflection of the rails. On the old Croydon line, where that system was used, the rails were frequently found broken, and were repaired by a plate fixed under the broken ends. It should be mentioned, however, that the rails, which were of the bridge form, were very light in section. So far as the cost of repairs of the two systems is concerned, that of the longitudinal will be the heavier. The packing will be less than in the transverse, but the timber is more crushed than in the other system, in which chairs are used, and it is more troublesome to get at the bolts and fastenings. It cannot be denied, and the examples we shall adduce of the systems of permanent way in most general use on the present lines, both at home and abroad, will corroborate the statement, that rails fixed in cast-iron chairs by wooden keys, and laid upon transverse sleepers, constitute the modern type of road mostly in favour with engineers. Exceptions exist, but they are few and far between, and are, moreover, due to some especial local features which necessitate a departure from the general rule.

A great deal has been said against the employment of timber sleepers in India, and in consequence of the difficulty in procuring, or preserving them, those of iron have been extensively used there. From experiments carried out on the Madras Railway with timber sleepers, it was found that out of sixteen different woods, five only were in a sound condition at the end of a couple of years. Of the others, those sleepers which had been uncovered, were less decayed than those which had been completely embedded in the ballast, and the decay was invariably noticed to commence under one or both chairs. This was, no doubt, owing to the retention of moisture there, and might be prevented by giving a good coating of tar to the chair beds. The sleepers which failed on the Madras line may be divided into two classes. The first comprises those which were originally of perishable woods, and consequently unfit for the purpose, and the second those which, although of a good quality of timber, had been cut from young trees, and had not been sufficiently matured. Of the whole amount of timber in India available for conversion into sleepers, about 62 per cent. could not be used in the natural state, and were practically useless, because no artificial means existed in the country for preserving those kinds of a perishable character.

In every specification attached to a contract for the delivery of sleepers, beams, balks, or other timber intended for engineering or architectural purposes, one of the most important clauses is that which specifies the amount of heartwood which the balk or beam must possess, in order to ensure its being passed by the engineer or other person deputed to examine it. It is calculated that a certain quantity of perfectly sound and well-seasoned timber ought to be obtained out of every balk, and this would not be the case, should the timber contain more than the allowable proportion of sapwood. It is a matter, then, of some importance and of considerable convenience to the person, in whose hands rests the responsibility of passing or rejecting timber, to be able to ascertain speedily and accurately, whether the blocks under his examination possess a sufficient amount of heartwood to furnish good and sound material for the purposes for which they are intended. A short rule by Thomas Cargill will enable anyone to calculate a table by which he can discover, by simple inspection, whether a piece of timber will give or not, the quantity of heartwood required by the specification. In any balk of timber, the heartwood is found disposed in a pretty uniformly circular figure around an imaginary line passing through the centre of the balk, and may be regarded as its longitudinal axis. This is shown in Fig. 6129, which is a section of a balk of timber, and in which the inscribed circle shows the heartwood, and the rest of the figure exterior to the circle represents the amount of sapwood which the balk contains. It may be mentioned that the sapwood is that portion of the timber which is of the newest or more recent growth, which, owing to the premature felling of the tree, has not had time to acquire the consistency and close-grained structure of the interior parts. The sapwood, which is unfit for constructive purposes, would become heartwood, if the tree remained unfelled; and were the tree permitted to attain to maturity, there would be scarcely any sapwood whatever.

In Fig. 6129 let A and B be the breadth and depth respectively of the balk, D the diameter of the

circular portion of heartwood, and let N represent the proportion of sapwood allowed in the specification. The total amount of heartwood will equal the difference between the contents of the whole cross-section of the balk and the proportion of sapwood Calling this H, we have $H = A \times B - N \times A \times B = A\,B\,(I - N)$ Again, as the heartwood lies wholly within the circular portion of the figure, the area of this circle must $= A \times B\,(I - N)$, which gives the following equation; $\frac{\pi D^2}{4} = A \times B\,(I - N)$, in which π is the ratio of the circle to its diameter. Solving for D, we obtain $D = 2\sqrt{A\,B} \times \sqrt{\frac{I - N}{\pi}}$. As the length of the piece of timber is common to both sides of the equation, it would be superfluous to introduce it. In cases of square balks in which A = B the equation becomes $D = 2\,A\sqrt{\frac{I - N}{\pi}}$.

As A, B, and N are always known, it is easy to construct a table for the corresponding values of D, and all that remains for the inspector of the timber to do, is to lay his rule across the centre of the balk, and ascertain whether the actual and calculated length of D coincide. Since N, in the same contract, is generally constant, the calculation is very much simplified, particularly in the case of square balks which are the most usual. The value of $\sqrt{\frac{I - N}{\pi}}$, once determined, suffices for all the different values of A and B The quantity of sapwood, which was sometimes permitted to remain in sleepers, very speedily led to their decay, especially in the case of transverse sleepers.

It was the great inferiority of the timber used in cross sleepers, which suggested to Reynolds the idea of a composite sleeper. He proposed to use one composed of cast iron and wood

The shape of the sleeper was that of an inverted trough, whence it obtained the name of the hog-trough sleeper: the body of the trough being of cast iron and the lining of timber. The idea, however, did not fulfil the expectations of the inventor, and it was not until ten years subsequently, that a metal sleeper was introduced which has done good service to the road.

Cast-iron Sleepers.—It was not long after the introduction of iron, under a variety of conditions, to the requirements of railways that it was attempted to employ it as a substitute for sleepers The first cast-iron sleeper which has been used with success on existing lines was that of Greaves, which possesses several very commendable features. It is shown in front elevation in Fig 6130, and in side elevation in Fig. 6131, which latter view constitutes a cross-section of the permanent way used in

6130.

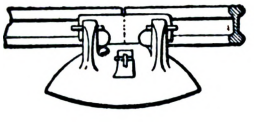

6131.

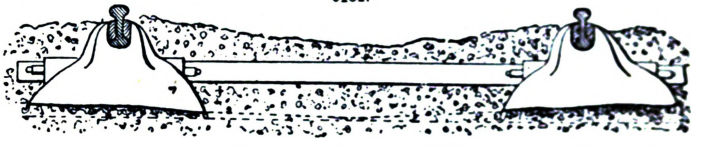

Egypt, India, and other countries in which the sleeper has been introduced. The sleeper consists of a cast-iron bowl with the chair cast on it, which may be of any section to suit the rail Each sleeper is connected with its opposite neighbour by a transverse tie-bar, see Fig. 6131, which keeps the gauge in order. In Fig. 6130 the joint-chair is shown, which is a double-headed chair, with loose fishing plates of either cast or wrought iron attached to the rails by split iron keys. The merits of this system are that the sleeper is strong in form, has a good hold of the ground, and is not liable to be detached from the chair, which forms part and parcel of the same casting. Moreover, the load is brought directly over the whole bearing surface, and the ballast is always maintained in a dry and elastic condition. The opposite sleepers cannot separate laterally, owing to the transverse tie-bar forming part of the system. The packing, which is a serious difficulty to many metal sleepers, is accomplished in a very ingenious manner, by means of a pointed rammer, through a couple of holes provided for the purpose. In this manner the sleeper and rail can either be raised without disturbing the ballast, or lowered by taking some of it out. All opening of the ground is thus prevented, which in wet localities is a very great advantage. It was found on the Egyptian railway, that these packing holes gave some trouble, as the soft soil upon which the sleepers were laid was forced up through them. Measures have since been taken to obviate this inconvenience.

6132.

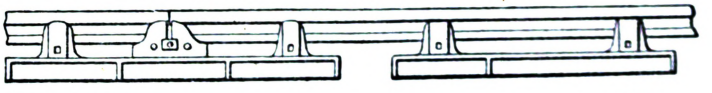

6133.

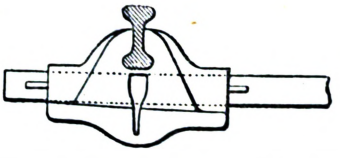

6134.

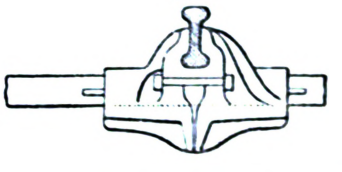

In Figs. 6132 to 6134 are represented in front elevation, in end elevation, and in cross-section, the cast-iron sleeper introduced by P. W. Barlow. Each sleeper is in two separate pieces,

united by a wrought-iron tie-bar, and is composed of a plate 3 ft. long × 7 in. in width, with two half chair heads cast upon it. The joint-sleeper in Fig. 6132 has three half chair heads cast on it, which grip tightly the lower half of the rail, by means of screw-bolts passing through the chair heads below the rails. Some nice workmanship is required to make the chairs and the rails fit closely, a condition very unfavourable to their employment. Another cast-iron sleeper was invented by W. H. Barlow, somewhat similar to the former. It is cast in one piece, as shown in Figs. 6135, 6136. The rails are fixed to the chairs by the ordinary keys. These sleepers were used for a time on parts of the Midland Railway. The cast-iron sleeper which appears to possess the most advantages, although not the most extensively used, is that introduced by Samuel, and is shown in Figs. 6137 to 6139. It consists of a wedge-shaped trough, of depth sufficient to take the whole height of the rail, and has two sloping arms at the upper part to take a bearing on the ballast. In the cross-section in Fig. 6139 the manner of fixing the rail is shown. It is wedged in between two pieces of timber, which grip it at the sides and lower flange, and are in consequence themselves strongly compressed. But as these trough sleepers are not continuous, as shown in Fig. 6137, the rail must be strong enough to act as a girder, and not deflect under the passing load. The advantages of these sleepers are that they are sufficiently deep to prevent any tendency to spread, and also from the same cause get a firm hold of the ballast. One of the chief points in a permanent way is secured by the use of the wooden wedges, that is, the presence of an elastic medium between the rail and the sleeper. Moreover, as the bottom of the rail is not in contact with any iron surface, it remains uninjured, and the wooden wedges enable that nicety of adjustment and fitting, necessary in the Barlow sleeper, to be dispensed with, since they effect their adjustment through their own compressibility. Besides, the same sleeper can be used with rails of different sections, since all that is necessary is to slightly alter the shape of the wooden wedges or keys so as to fit close to the rail.

6135.

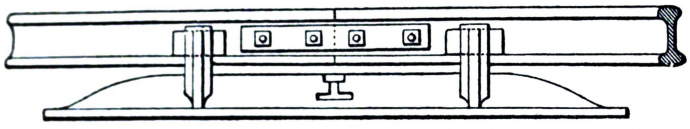

6136.

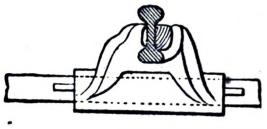

6137.

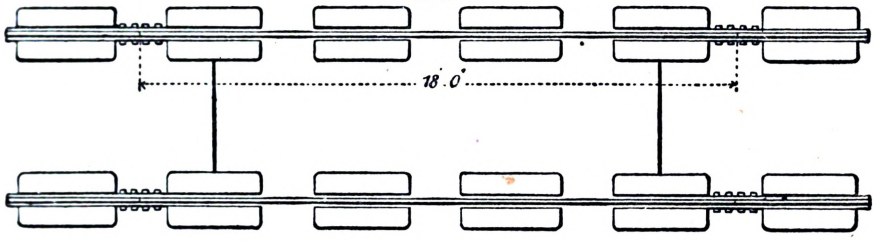

6138.

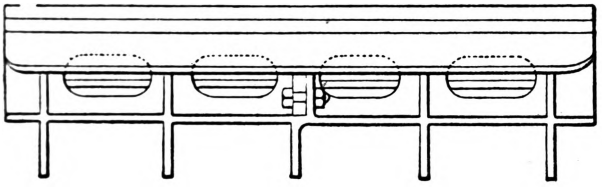

6139.

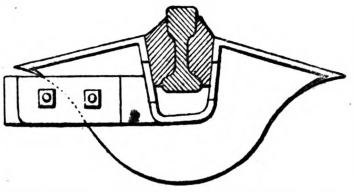

De Bergue was early in the field with cast-iron sleepers, and introduced a description of permanent way, represented in Figs. 6140, 6141. A single-headed rail is laid on a series of cast-iron sleepers, formed of a flat table, with a longitudinal rib below. To strengthen the table, a series of thin ribs, similar to a network, are cast on the upper side. A lug is also cast, to take one edge of the rail, and a loose slip of a wedge-form, with a bolt, is made to take the other side. The bolt has an eye to take the cross-tie bar below, which is lap-notched into the longitudinal rib of the sleeper. The whole arrangement is exceedingly ingenious, and possesses a considerable amount of strength, with comparatively little metal; but in a mechanical point of view, it is disadvantageous, since the rail is a prop on the sleeper. The joints are fished, and the sleepers, although longitudinal, are not continuous. The single-headed or foot rail has less vertical strength than the double-headed; and the sleepers, in order to ensure the maximum of strength, should be continuous and abut against one another. This system has been tried on the Great Northern, the South-Western, and other lines. The notch in the lower rib of the casting having been found to be disadvantageous, an alteration was made in a sample subsequently laid on the South-Western Railway. De Bergue divided the lower rib into two parts, and compensated for it by applying an upper rib. This gave a much better disposition of the material, as it placed the cast-iron rib in compression instead of in tension. It has been stated that this road costs less for

6140.

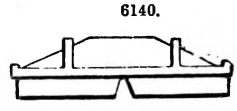

6141.

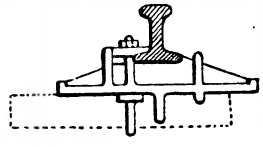

maintenance than the ordinary way. The area of surface of De Bergue's permanent way, bearing on the ballast, is equivalent to a continuous longitudinal way, having a width of 9 in. under each rail. The castings are of rather a complicated character, and there is a good deal of nice fitting to be done.

Wrought-iron Sleepers.—A longitudinal road of wrought-iron sleepers was introduced by Macdonnel, and tried on one or two lines. It is represented in Fig. 6142. The sleeper or bearing is curved downwards for the purpose of affording vertical strength. There are three ribs or projections rolled on it, one at the centre, and the other at the sides. Between the centre rib and each of the side ones the flanges of the rail, which is of the bridge section, are placed. They rest upon strips of timber, and the flanges, timber and sleeper, are all held together by vertical bolts. The form of the sleeper is strong, well adapted to prevent lateral spreading, and also to get a good hold of the ballast.

6142.

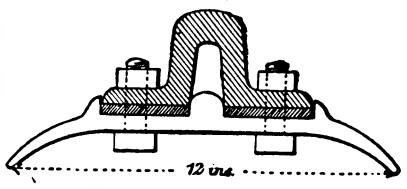

6143.

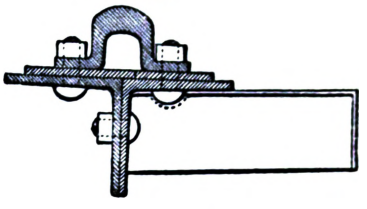

It was owing to the failure of some of the cast-iron sleepers tried on the East Indian Railway, which suggested the trial of the wrought-iron system shown in cross-section in Fig. 6143. It consists of a longitudinal sleeper, or continuous bearing, formed by two angle-irons, 5½ in. × 5½ in. × 20 ft. in length, bolted together and breaking joint every 10 ft. Upon this is placed a packing piece of hard wood, ½ in. in thickness, and through it and the sleeper is bolted a rail of the bridge section weighing 70 lbs. to the yard. The cross-ties or transoms are also of angle-iron, placed at intervals of 10 ft., and bevelled at the ends to give the necessary tilt to the rail. This sleeper possesses great strength and stiffness, and constitutes in reality a beam 9 in. in depth and 11 in. in breadth. As the central web is 5½ in. deep, it gets so good a grip of the ballast as to maintain the gauge, even on curves. It can also be packed with great facility, as it dispenses with the usual opening up of the road, and a less depth of ballast is necessary, since the bearing surface is only 3 in. below the rails.

In Figs. 6144, 6145, are shown an elevation and cross-section of Addis's wrought-iron sleepers.

6144.

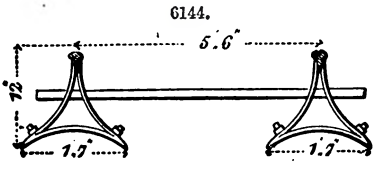

6145.

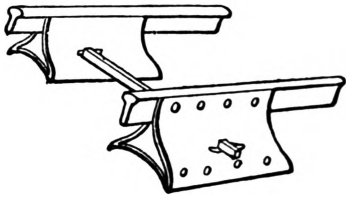

An ordinary single-headed rail is supported on the sleepers, which are formed of plates of iron or steel, rolled to the required shape, so that when brought together and fixed by bolts and nuts, or by other suitable means, they assume the form in section of a triangle, the sides of which are hollow or concave; see Figs. 6144, 6145. The rail is held by the jaws formed at the upper angles of the sleepers, and is secured by the bolts passing through the jaws and its own web. The sleepers are 3 ft. in length, fixed at distances of 6 ft. from centre to centre, which allow three sleepers to each rail, 18 ft. long, and also permits the rails to be fished in the centre of a sleeper. The sleepers are kept in line by tie-rods or bars passing through holes formed in the plates of the sleepers, and fastened to them by jibs and keys. Speaking generally of both cast and wrought iron sleepers, it may be stated that the practice of placing flat, or nearly flat, iron plates on the surface of the ballast, will be found not to answer, if from no other reason but in consequence of the injurious effects arising from frost, heavy rains, and floods. Greaves' cast-iron sleepers will not answer for high speeds, although his road is probably the best of that description, and under certain circumstances may not be much inferior to one of timber.

Chairs, Keys, and Fastenings.—In the several examples, which will be described and illustrated in this article, of the best known and most extensively employed systems of permanent way, the keys and fastenings will in many of them constitute a concomitant feature. But there are some descriptions of these indispensable adjuncts to the road, which deserve a separate notice, more especially as the changes which have been from time to time introduced, point out that improvements have been effected in them, as well as in the more prominent parts of the permanent way. The extensive use of wooden keys is due to several important advantages which they unquestionably possess. They are simple and economical; they are especially adapted for the double-headed rail; they are readily procured, and they hold the rail both laterally and vertically in the chair. The principal reason which has led to their adoption is, the elasticity of the material, which allows it to resume its original dimensions, after being subjected to a heavy compressed force. The advantages of wooden keys will probably always outweigh their disadvantages; which are, that they shrink and become loose in dry weather, and decay after tolerably short service. Oaken keys are generally unfit for further use after a period of eight years. Those which are placed at the joints last only five years, because they are exposed to a greater amount of wear and tear. They have, owing

to the rail not being continuous at those points, heavier duty to do, and are more liable to work loose. Until the sleepers near the joints were placed closer together, the joint-sleepers became more depressed than those adjacent, which also injuriously affected the joint-keys.

One of the results arising from the joint-key becoming loosened, is to give a cant to the chair, which throws the ends of the rails out of level, as shown in Fig. 6146. It has been proved that the chair is always canted in the direction of the line, and the joints have sometimes become so uneven that the last inch of one end of each rail is rusted, thus showing that the wheels of the carriages never touched them. If a joint-sleeper gets out of level, and the key is not securely fixed, the wheel of the advancing engine or carriage depresses the end of one rail, as in Fig. 6146, without depressing the other, and the consequence is that the wheel strikes the projecting end of the rail with a more or less violent blow. In badly-laid joints this incessant concussion is very disagreeable to the passengers of a train, and causes the unevenness of the road to be very severely felt. Some years ago Barlow introduced a hollow wrought-iron key, having a shape very similar to the wooden key, and possessing a considerable degree of elasticity, in virtue of its hollowness. This key is represented in Fig. 6147, and the stiffness, which is dependent upon the thickness of the metal, is regulated by the strength of the chair. The key is made so as to fit the rail as closely as possible, and the pressure resulting from driving it in, elongates it in a manner which conduces still further to the ensuring of a tight fit. These keys were tried on a few of the earlier constructed lines, but have failed to come into use. The objections to them are that they are more expensive than the ordinary compressed oak keys, and also require very accurate fitting, a fatal objection to keys. It should be noticed, that the compressed oak keys were originally 8 or 9 in. long, but subsequently reduced to about 4 or 5 in. An objection to the solid taper iron keys, which were employed on some lines, is that, in driving, the lower flanges of the rails are liable to be torn off.

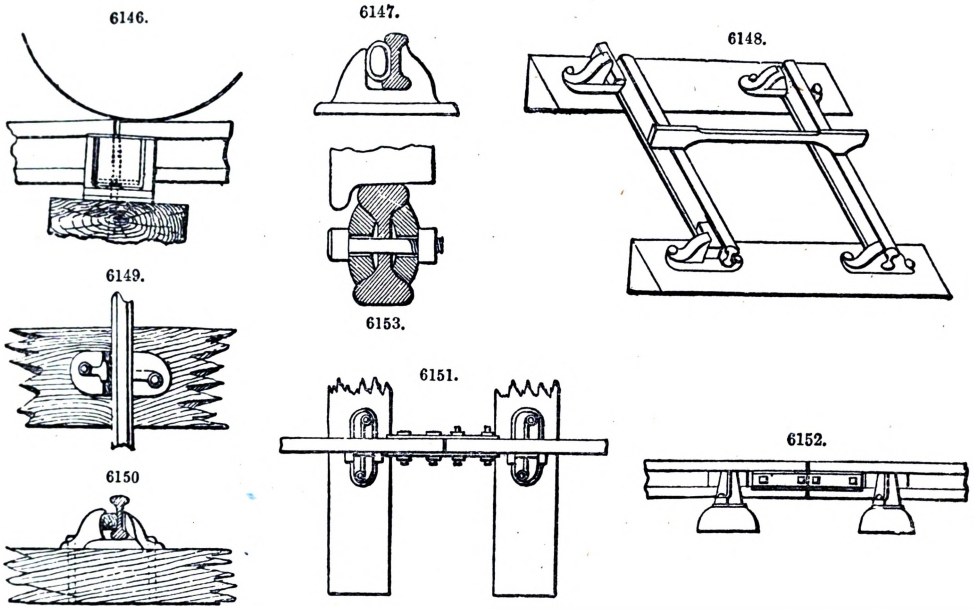

It cannot be said that a really good serviceable mode of fastening rails in the chairs was introduced, until the improved cast-iron chairs of Ransomes and May came into use, together with their compressed oaken treenails, to attach them to the sleepers. These treenails are most extensively used, and have been successfully applied to the Indian railways. In order to secure a thoroughly good fit, and give the proper cant to the rail, the chairs are cast in iron moulds, which imparts great accuracy of form. The chairs, and the mode of fastening the rails to them and the sleepers, also are fully shown in Figs. 6148 to 6150. Bridges Adams proposes as an improvement upon the shape of the treenails, that they should be made square or oblong, in order to facilitate the operation of boring the holes, and to prevent splitting the sleepers, which happens sometimes with the round treenails when the holes are not very accurately bored. A treenail of an oblong section would drive very forcibly in the direction of the grain of the wood, and would offer a greater resistance against the lurching of the engine; and it could not split the sleeper, as it would be of less width than the hole across the grain. The weakest part of the permanent way is the joints. The simplest method of strengthening them would appear to be to put an extra sleeper underneath, but as the sleepers themselves only bear on loose ballast, they furnish no continuous support. The next remedy is to take the ends of the rails altogether out of the chair, and to place a sleeper with a chair on it on each side of the joint, and thus suspend the joint between the two chairs. The rails and chairs would be connected by fishing, that is, by adding two pieces of iron, one on each side of the rail, between it and the chairs. But, in order to place the fishes or pieces of iron in the chairs, especial castings are needed; to obviate which, the simple plan was adopted of punching holes in the ends of the rails, and connecting the fish-plates together by four bolts passing through and through. The holes in the rails are made rather larger than those in

the fish-plates to allow of expansion. The first fish-plates were made of cast iron, but they have been advantageously superseded by others of wrought iron. This arrangement proved so successful, that old rails which had become useless from being worn at the ends, so that one end projected nearly a quarter of an inch above the other, worked to a level surface, under the rolling action of the trains, when firmly secured by the fish-plates.

The manner in which the fish-plates are attached to ordinary rails is shown in plan, elevation, and section in Figs. 6151 to 6153, and the whole arrangement is both simple and effectual. A proposition was made by Gordon to halve the ends of the rails into one another, by cutting off a piece from the top of one and from the bottom of the other, so that one should overlap the other. The expectation was that, by making the overlap in the direction of the traffic, the ends of both rails would be kept down together. The plan failed in practice, and was consequently abandoned. It may be mentioned here that on the Blackwall Railway, when it was worked by rope traction, the rail ends were connected together by a scarf-joint about 6 in. in length, with the points dovetailed and the whole wedged into the chair. If fish-plates are made too weak for their work, they will take a permanent set under the heavy strain they are subjected to. For this reason some engineers prefer cast-iron fish-plates, since, if they are not strong enough, they break at once, and stronger ones can be substituted, whereas when the fish-plates are of wrought iron the set is not readily perceived.

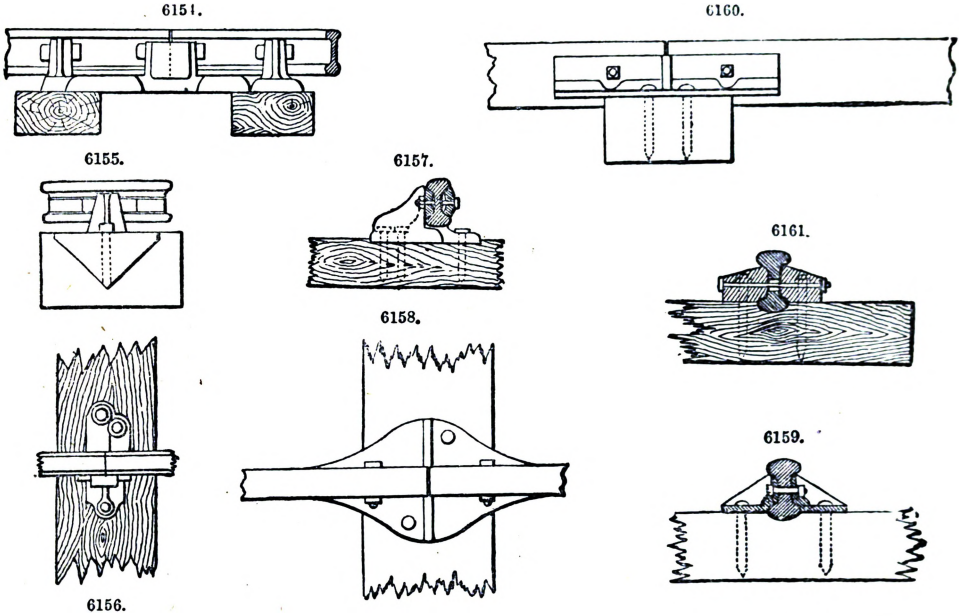

Among the many joint-chairs which have been invented, the one shown in Fig. 6154 is that introduced by John Fowler. It consists of three pairs of jaws cast in one piece on a sole-plate. The two extreme jaws rest over two sleepers, so that the joint rests suspended in the middle jaw. A neat chair invented by Samuel is represented in Figs. 6155 to 6157. It was intended to obviate the objection against the use of fish-plates, because they required an additional sleeper and chair, on lines, the funds of which were in an unsatisfactory condition. The chair in Fig. 6157 has only one jaw which fits against one side of the rail, and a wrought-iron fish-plate being placed on the other side, the whole is bolted together. While only one sleeper is thus needed at the joint, the arrangement is open to the objections which have been raised against joints being placed directly upon sleepers, instead of being suspended between them. B. Adams also proposed a plan, by the adoption of which the existing joint-sleepers on lines may remain, and the inefficient joint-chair may be replaced by the cast-iron bracket-joint, shown in plan, cross-section, and side elevation in Figs. 6158 to 6160, which has no wood keys. A pair of cast-iron brackets are bolted to the rails in the side channels by two bolts instead of four, as in the case of the fish-joint. Each bracket has a broad foot which rests on the sleeper, and is secured to it by spikes. The lower flange of the rail projects below the feet, and being grooved into the sleeper, keeps the gauge without bringing strain on the spikes, and renders the bolts a sufficiently firm fastening in themselves.

Another method of fixing rails to sleepers is that represented in Fig. 6161, also due to the same authority. Its object is to dispense with the use altogether of the cast-iron chair, and bed the rail in the sleeper with wooden wedges or brackets on each side of the rail. The lower flange of the rail is sunk 1 in. into the sleeper, and the total height of the rail above the sleeper is only 4 in. instead of 7, which is the case when the cast-iron chairs are employed. The lowering the centre of gravity in this manner is a decided advantage, and the rails could be reversed or turned to much greater advantage by the use of the wooden brackets. Referring to Fig. 6161, the two pieces of timber or side brackets are 9 in. long × 3½ in. wide × 3½ in. thick, and are bolted by a single bolt through the rail, one in each channel, the lower flange of the rail resting on a cross channel of the transverse sleeper. Spikes are driven through the pieces of oak into the sleeper to make the whole joint secure. At the joints, plates of iron are placed in the rail channels, between

the side brackets and the rail, and are secured by the same bolts. Whatever may be the assumed advantages of this particular joint, it is clear that the strength of the side brackets, which are small enough, is very much impaired by the bolts and spikes driven through them.

At one time, there was considerable difference of opinion with respect to the relative merits of a suspended fish-plate joint, and one in which the fishing was effected directly over a bearing, but the question is pretty well settled now in favour of the former. To make a good fish-joint, the surfaces of the bearing between the fish and the rail should fit perfectly, and be straight in section. There should be a slight space or clearance between the plate and the web of the rail to allow for variations in size, and also to get a proper bearing against the flanges. Fish-plates should be quite free from winding, and the holes in them should be large enough to prevent the bolts from binding in them. Fish-plates were used early in Germany, but not in the manner of a suspended joint between the supports. They were employed merely to hold the ends of the rails together in the chairs, and were adopted in this manner on the Leipzic and Dresden railways, and other lines in Rhenish Prussia. The gauge was kept in place by the use of long bolts or tie-rods passing through the sleepers.

6162.

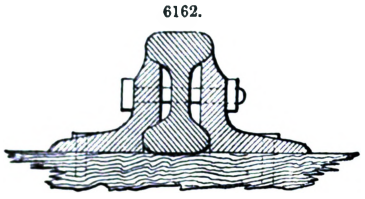

6162*.

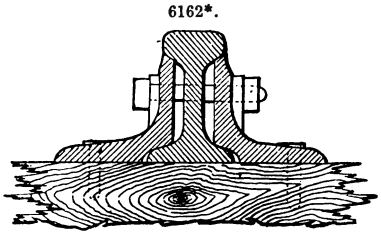

6163.

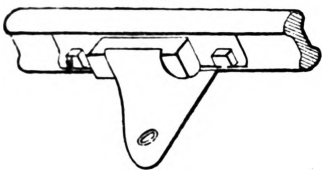

6164.

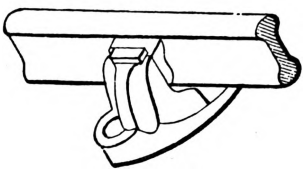

6165.

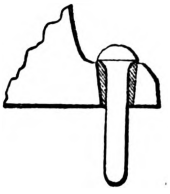

In addition to chairs and other methods of attaching rails to the sleepers, W. B. Adams designed a fastening on the principle of the bracket or ship's knee. It is adapted for the double-headed rail, Fig. 6162, but can be used also for the foot rail or single-headed, Fig. 6162*. It will be seen that the fish and chair are entirely abandoned, the rail being fixed on the sleeper, or let into it, or placed above it, so as to be wedged below if preferred. The rail is secured in position by the application of knees or brackets, bolted to the rails and passing through them, and to the sleeper also, precisely as a deck beam is fastened to the side framing of a ship. This arrangement fulfils the conditions of keeping the rail as low as possible on the sleeper, about 2 in. lower than the ordinary chair, and of saving the lower table from damage by blows, while the even top does not interfere with its being firmly fixed when reversed, so that it is really a reversible rail. There are no keys to get loose, and the bolts are saved from much vibration by the structure being bedded on the timber. The joint-brackets are 1 ft. 6 in. in length, with four bolts, and weigh from 42 lbs. to 45 lbs. a pair. The intermediate brackets are 4 in. long, with one bolt, and weigh 12 lbs. a pair. These brackets are in partial use on the Great Northern, South-Western, and Western Railways of France. Greaves subsequently introduced some improvements in his joints and fastenings. A joint-chair is shown in Fig. 6163, in which he places one fish in the rail channel in the ordinary joint-chair, and secures it by a wood key, also by bolting it down externally to the rail. In Fig. 6164 a chair with a circular base has a plate to fill the bottom of the rail, and a vertical wood key to secure it. A method is also shown in Fig. 6165 for preventing the head of a chair-spike wearing, by surrounding it with a ferule of wood.

The first joint designed for the bridge rail, as shown in Fig. 6166, was not considered effective enough to constitute the rail a beam fixed at the ends, so W. B. Adams designed the sample in Fig. 6167. It consists of a pair of side castings, each 12 in. long, which press in the angle formed by the rails and the side flanges. An iron tongue piece, also 12 in. long, fills the hollow of the rail. A couple of bolts $\frac{7}{8}$ in. in diameter pass through the three castings, and, as they tighten, the side castings compress in the inclined plane where they join, and produce a firm joint. This truss-joint has been tried partially on lines in Ireland, upon which the bridge rail is laid down. The number of separate castings necessary to form the chair is an objectionable feature in the arrangement, not to mention the nicety of fitting requisite to make a really good joint. The remarks made respecting suspended and supported joints, hold good for the bridge section of rail as well as for those of other forms, provided they are laid upon cross sleepers. Under these conditions, each chair acts the part of an anvil, while the engine is the hammer, and the result is that when supported joints are subjected for some time to this kind of action, they become hammered out and spread.

6166.

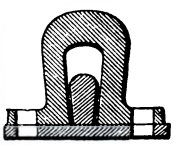

6167.

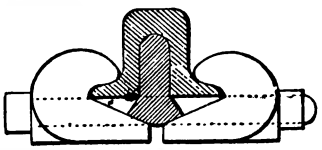

In Figs. 6168 to 6170 is represented a trough-shaped chair. Fig. 6168 is a plan of the joint-chair; Fig. 6169, a plan of the ends of the rails with the heads removed; and Fig. 6170, a cross-section of both chair and rail. This class of rail-joint is well adapted for the single-headed rail in question, and was designed by Blakiston for a portion of the Ulster Railway, and secures the joint upon a principle different to that in ordinary use. Usually the joint is fished laterally instead of at the bottom. On referring to the cuts, it will be seen that, in order to allow for the expansion and

6168.

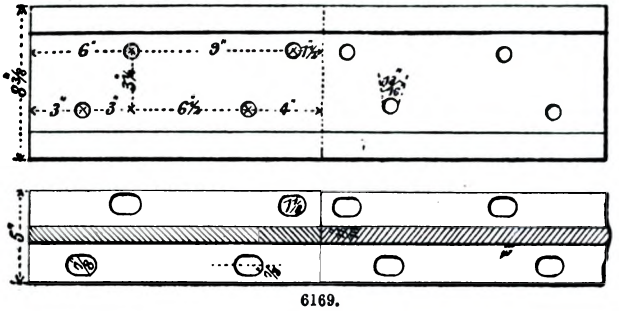

6170.

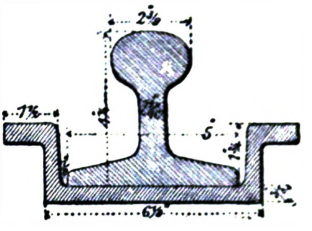

6169.

contraction at the joints, the holes in the rail are of an oval shape, and a fraction larger, both longitudinally and transversely, than the corresponding holes in the chair. The latter is a complete trough girder, and its breaking weight could be readily calculated on that assumption. The ribs at the side impart great lateral stiffness to it. The weight of the rail is 75 lbs. to the yard, and that of the chair, which is 2 ft. 9 in. in length, is 45 lbs. This is not too heavy proportionately for the rail. It was a mistake, frequently committed in former times, of making the chairs considerably too light for the rails they had to support. Breakages were continually occurring; in consequence John Ramsbottom introduced on the London and North-Western Railway a wrought-iron chair and fish-joint without bolts, in which a wrought-iron key is used, which is long enough to reach from chair to chair, and is placed on each side of the joint. This method of suspending the rail from the chair has the advantage of maintaining the rail uninjured by the chair, so that it can be turned with better results than usual. It also saves the expense of punching or drilling the bolt-holes in the rails, but this is more than compensated by the additional length of the key. Iron keys might be in some instances substituted for those of wood in hot climates with advantage.

It has been asserted on good authority that the compressed keys are not the best which can be used in India and other similarly situated countries. After being exposed to the action of the weather for some length of time, they swell and require to be pared down, before they can be made to fit into the chair. But since these objections were raised, which were no doubt valid, the keys for railways in India have been made of rather larger scantling than those for the English lines. They are not then so readily affected, and have been found to afford very good and satisfactory results. A very superior description of key is employed on the Portuguese lines. It is made of oak, about 10 in. in length, and has a slight taper longitudinally, so that, as the wood shrinks by reason of the heat, the key can be driven up, and the rails tightened in the chairs.

A certain amount of elasticity is necessary in the material of which keys are made, or the cast-iron sleepers would break under the passage of a heavy load at a high speed. Barlow was well aware of this fact when he tried his wrought-iron key, shown in Fig. 6147, the thickness of which was proportioned, so that, while on the one hand the key had sufficient elasticity, on the other it was not too strong for the chair. The best laid road with the heaviest rails will be shaky to run over, if the keys do not fit well and tightly.

Rails.—The earliest, cheapest, and worst description of wrought-iron rail is the flat tire-bar rail spiked down to a longitudinal balk. This was used on some of the early American lines, but subsequently abandoned on account of the great wear and tear, and the danger to passengers. Sometimes the end of the rail turned up, broke through the bottom of the carriage, and killed a person. This form was succeeded by the single T fish-bellied rail, weighing from 28 lbs. to 35 lbs. to the yard, which was used on the Liverpool and Manchester line. The Vignoles' rail came next, then the double T, then the foot rail, the bridge form, and others, which will be noticed in their proper place. After a few alterations in form and weight Barlow's rail was reduced to the section shown in Fig. 6171. A plan and cross-section of the line laid with these rails are given in Figs. 6172, 6173. This rail was invented to dispense with the assistance of sleepers, and to take its own bearing in the ballast. It weighed at one time as much as 127 lbs. to the yard, but this weight has subsequently been reduced to about 95 lbs. The width was originally 13 in., and the height 5¾ in., but these dimensions were altered to 11 in. and 4½ in. as in Fig. 6171. The joint is made by placing the end of the rails on a saddle of wrought iron 2 ft. 6 in. in length, and made to fit the hollow of the rail. The ends of the rails are riveted to the saddle without allowing any room for contraction and expansion. Since the upper part of the rails abut closely against each other, they resemble the upper flange of a girder, and are in compression, while the lower part is in tension similar to the bottom flange of a girder. The whole joint therefore represents a girder, the strength of which is altogether dependent upon the shearing strength of the rivets. With respect to expansion, it is evident that if any were to take place, the rails must either expand throughout their whole length, or else buckle laterally and become distorted. This question of the contraction and expansion of rails is not by any means satisfactorily settled. Brunel, who riveted some eighty or hundred rails together on the Great Western Railway, did not find that any inconvenience arose from no provision

being made for expansion. It is probable that no expansion does occur in the case of the Barlow rails, for, as they lie directly on the ground, which is a good conductor, the heat is carried off, and

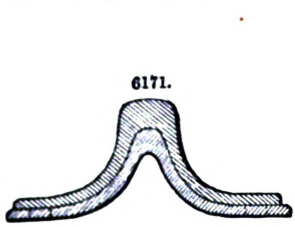
6171.

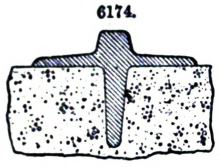
6174.

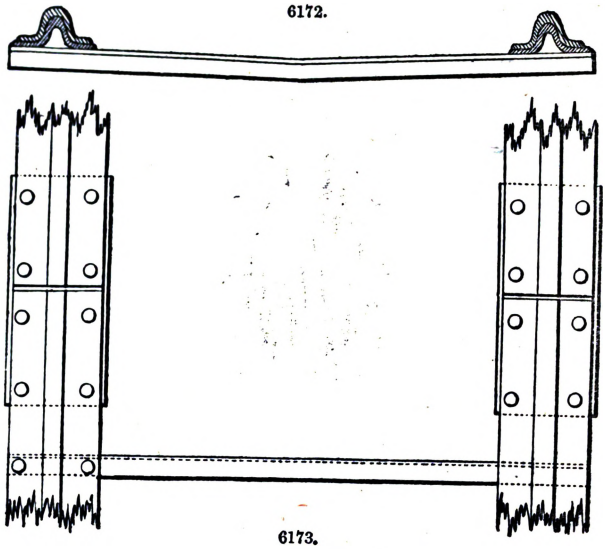
6172.

6173.

the rise in temperature of the rail prevented. The disadvantage common to all rails of this type is the impossibility of properly packing them. This objection is fatal to their general adoption. The Barlow rail has resulted in a complete failure, and the inventor was one of the first to acknowledge it. The objects to be gained by the saddle-back rails are lateral and vertical stiffness, combined with a large bearing surface. All these points can be equally well ensured in a rail of the section represented in Fig. 6174. A bearing surface can be readily obtained of 14 in. in width, in comparison with the Barlow rail of the same weight, of 9 in. in total depth and 6½ in. in depth below the ballast. The joints can be formed by means of cheek-plates or wrappers bolted to the vertical and horizontal parts of the rail, and an allowance can be made for expansion, by making the bolt-holes in the rails larger than those in the cheek-plates. Any difficulty or extra expense which might occur in the manufacture of a rail of this section, would be easily surmounted by the large quantity ordered.

In Figs. 6175, 6176, two sections of girder rails, proposed by G. W. B. Adams, are represented. He describes them as a single-headed form with a pair of lateral supporting wings, superadded at the position of the neutral axis, or they may be considered as foot rails on the American plan, with a lower vertical rib superadded to give vertical stiffness, and keep the gauge without straining the holding-down spikes by the blows of the wheels. The example in Fig. 6176 is 4½ in. deep, 3½ in. wide, and weighs 42 lbs. to the yard. A joint-plate 1 ft. 6 in. in length, 2½ in. wide, and ½ in. thick, is secured to the rail ends by two bolts. The other example in Fig. 6175 weighs 65 lbs. a yard, is 5¼ in. in depth, and 4 in. in width across the supporting wings. The rails are fixed in cross sleepers which are truly and accurately cut in a grooving machine. This renders the getting out of gauge of the track impossible. The heads of the rails shown in Figs. 6175, 6176, appear small, but they are quite large enough for the wheel tread, unless when enormous and unprofitable weights are run over them.

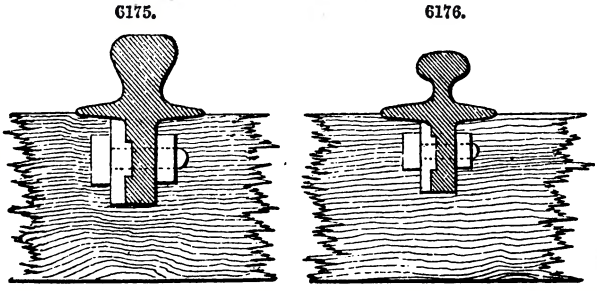
6175. 6176.

The bridge-shaped rails as shown in Fig. 6177, are considerably weaker, weight for weight, than the double I form. The proportion is as 5 to 7. Consequently a double T rail weighing 70 lbs., will be equally strong as one of the former type weighing 83 lbs. It is asserted that the bridge rail is not calculated to ensure soundness in the iron, as it requires iron of a superior description, and great care in rolling. Brunel, in some of his large contracts, in order to obviate the tendency of the rails to laminate, strongly advised his directors to pay an extra price to get them of good quality, which necessitated an additional process in the manufacture of them. Many engineers consider the system of the double I rail and cast-iron chairs to be much superior to the bridge rail, laid in any form. Hawkshaw abandoned the use of a rail weighing 58 lbs. to the yard having a form similar to the bridge rail, for the double I form and cast-iron chairs. The principal reason which will always prevent the bridge rail coming into extended use, is the difficulty of making a good joint, when it is laid in the usual manner with flat-soled joint-chairs, and especially when, in addition to the chair, the rail is fastened to longitudinal sleepers. It is almost impracticable to prevent the ends of the rails being driven into the timber when they are placed upon a flat plate. If the rails are fished, this difficulty is removed, but when fishing is resorted to, the double I rail

is to be preferred to any other form. In practice, rails must not be too high, or they offer too great a leverage for the effect of the lurch of the engine and carriages, which is occasionally a serious matter. Experiments have proved that when light rails have been put down, and subjected to a traffic beyond their powers of resistance, they become rolled out. Light rails placed in this situation, which were originally laid with a space of one-eighth of an inch at the joints, were found after being run over for some time, to be in close contact at those points.

As an example of the inferior manner in which the bridge rail was laid down in France, we will briefly refer to the permanent way of the Bordeaux Railway. The cross-sections of the rail and joint-plate are shown in Figs. 6177 to 6179. Both the average length and the cross-section of

6177. 6178. 6179.

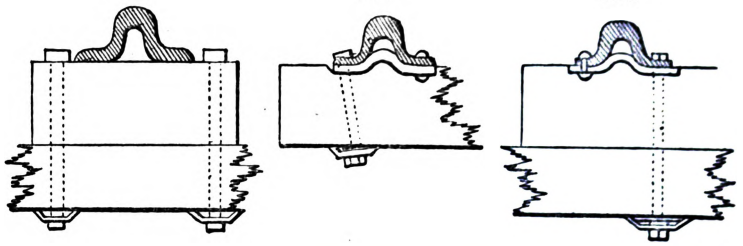

the longitudinal timbers, are only a little more than half those in use on the English lines. The sole chance of stability of a road, composed of such numerous short lengths of timber, must depend upon the substantial and workmanlike manner in which it is framed together. On the great western lines in France, this object is effected by the housing of the transoms into the longitudinal timbers, and by tie-bolts which pass through the latter and are firmly secured to the former. The continuous bearing of the longitudinal timbers is secured by a sort of dowel called a joint-plate, which practice has shown unites the ends of the timbers with a great degree of solidity. On the Bordeaux line, all the precautions which long experience in this country had proved to be necessary, were omitted. The short longitudinal timbers were merely laid end to end on the transoms as shown in Fig. 6177; the rails were laid on and riveted to the joint-plate, and the sole-tie between the outer and the inner rails was effected by the bolts which passed vertically through the rail, the longitudinal timber and the transom. The gauge of the road depended altogether upon the riveting of the rails, an operation which had been tried in this country and abandoned, as it led to many serious evils. The timbers could not be framed together until the rails were riveted, as the irregularities in their length and the great amount of expansion and contraction due to the climate, rendered useless any attempt at fitting without riveting. Moreover, the twisting and warping of the timber threw an undue strain upon the rails, which were not designed to bear so great a lateral strain. The tendency of the working of the traffic was to throw the line out of gauge, which was only resisted by the lateral stiffness of the rails, due to the riveting or to the holding-down bolts, which unfortunately acted at right angles to the disturbing force.

Figs. 6180, 6181, show two examples of Adams's suspended girder rail. The one in Fig. 6180 was

6180. 6181.

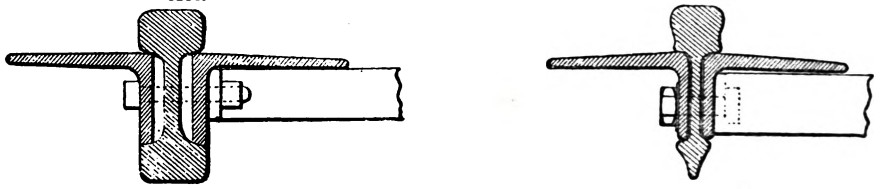

tried on the Great Northern Railway, and that in Fig. 6181 on the Bombay, Baroda, and Central India line. The fastenings of the two rails are similar, although the former is a double-headed and the latter a single-headed rail. The double-headed rail has heads deep enough to clear the wheel-flanges, and to allow for wear without allowing them to infringe upon the rail-bearers. The vertical rib connecting the two heads, being in a similar condition to the web of a plate girder, is made light. The object is not to sustain a load upon an insistent web, but to connect the top and bottom tables with such a total depth as will give the requisite strength, while the rail is suspended beneath the upper table, and forms a keel below the beams, giving a firm surface-hold in the ballast. The total depth of the rail is 7 in., the heads or tables being $1\frac{3}{4}$ in. in depth and 2 in. in width. This gives practically as much bearing surface to the wheel as the ordinary double I rail of $2\frac{1}{2}$ in in breadth, because when by wear more than $1\frac{3}{4}$ in. of width comes into bearing, the sides, which resemble mouldings, crush down for want of support. The angle-brackets are bolted through the rails, and to them as well, and, by breaking joint with the rails, and with each other, produce a uniform strength throughout, while the rail being suspended, and not insistent, can be made much lighter than would be possible, were it supported on the lower table by the ordinary method. The angle-brackets are about $6\frac{1}{2}$ in. wide, and when bolted to the rail make up a total width of $13\frac{1}{2}$ in., which is equivalent to the bearing surface of a cross-sleeper road, with the sleepers 2 ft. 6 in. apart. Consequently, as the height of the rail-tread is only $2\frac{1}{2}$ in. above the bearing on the ballast, and the keel below is $4\frac{1}{2}$ in. in depth, the maximum security against rocking or other disturbance in the ballast is ensured.

There are very few parts in this arrangement, which constitutes one of its best features. They

are the rail, the bracket, the bolt, and the tie-bar or transom, and these are all of the same material, that is, wrought iron. The bolts are comparatively but little strained, as the brackets fit securely in the square angles of the rail. There is a very large amount of lateral resistance to blows. Experiments were tried for comparing the strength of the joint of this rail with the fish-joint of the double I. The bearings were 7 ft. 6 in. apart. With a pressure of 8 tons applied by means of a hydraulic press, the bolts in the fish-joint were broken across, while those in the suspended girder joint stood 12 tons without any sign of yielding.

It may appear almost paradoxical to assert that too heavy a rail can be laid down, omitting all economical considerations. But experience has proved that there is a maximum limit. On the Eastern Counties line, rails weighing 95 lbs. to the yard, which had been laid, had to be taken up, and others weighing only 75 lbs. to the yard substituted for them. There were a great many more breakages with the heavier rail. Without going into needless particulars, the principal causes which tend to destroy rails, are the abrasion of the upper surface from the wear and tear of the traffic, and lamination or tendency to split off in layers, under the continual pressure of the wheels. Supposing the points of support for the rails, or the chairs and sleepers, to be 3 ft. apart, the heaviest weight they would have to bear, considered as girders, would be when the driving wheels of the largest locomotive in use were resting on them, which, for moderate traffic, would be equivalent to a weight of about 10 tons on the pair of rails, or 5 tons on one, acting at the middle of the rail, which is equal to double that weight uniformly distributed. Regarding the rail as a girder, the strain on the lower flange will be given—see MATERIALS OF CONSTRUCTION, STRENGTH OF—by the equation $S = \frac{W \times L}{8 \times D} = \frac{10 \times 3}{8 \times 0{\cdot}4} = 10$ tons nearly. Taking the safe strain at 4 tons to the square inch, the sectional area of either flange of the double-headed rail should not be less than $2\frac{1}{2}$ in., or of the whole rail about 7 in. These are the minimum theoretical dimensions. In practice the dimensions are very much larger. As a good general rule, not applicable, however, to rails subjected to a very heavy traffic, it may be stated that the weight of a yard of rail, if supported at intervals, should be 15 lbs. for each ton of the greatest load on one of the driving wheels of the engine.

In Figs. 6182 to 6190 are shown various sections of rails designed by Carl Sandberg, Inspector

6182.

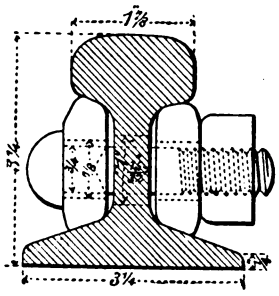

6183.

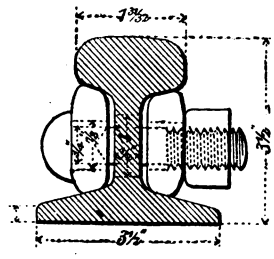

6184.

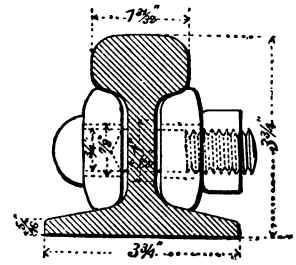

6185.

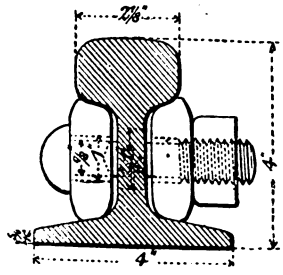

6186.

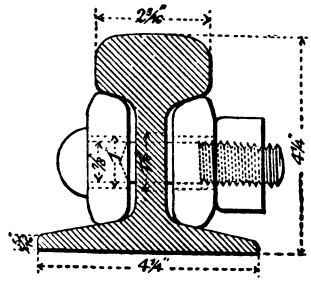

6187.

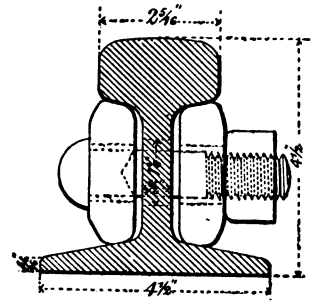

6188.

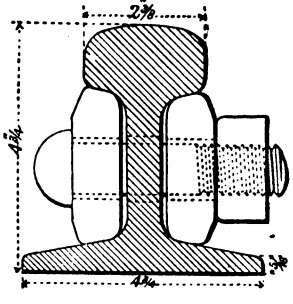

6189.

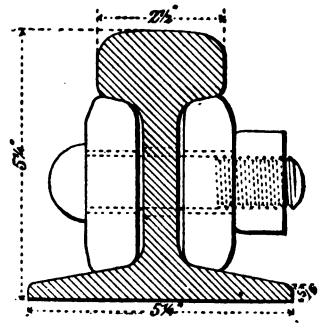

of Railway Plant to the Swedish Government. The peculiar features in these sections are that the width of the flange is equal to the height of the rail, thereby giving greater stability to the road,

6190.

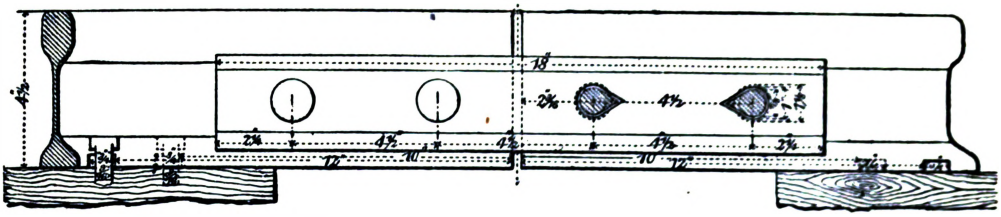

that the fish-plates are reversible, and the angular inclination of the cheeks is such as not to throw too much work upon the bolts, giving a stronger joint than can be otherwise obtained, with a pear-shaped rail-head, and that the material is distributed in the different portions of the rail, exactly according to the requirements of each part. Thus a good wearing surface is provided for the heads, while the web possesses the requisite stiffness, and the flange has sufficient strength and stability. The dimensions and details of the sections in Figs. 6182 to 6190 are given in the accompanying Table I. The joint is shown in Fig. 6190 for a rail weighing 65 lbs. to the yard.

TABLE I.

Weight in lbs. a yard.	Width of Flange and Height of Rail in inches.	Width of Rail-head in inches.	Thickness of Head in inches.	Thickness of Stem in inches.	Thickness of Top Slab in the Rail Pile in inches.
40	$3\frac{1}{4}$	$1\frac{7}{8}$	$\frac{7}{8}$	$\frac{1}{2}$	6 × 2
45	$3\frac{1}{2}$	$\frac{3\,1}{3\,2}$	$1\frac{5}{16}$	$\frac{1}{2}$	6 × 2
50	$3\frac{3}{4}$	$\frac{3\,1}{3\,2}$	1	$\frac{1}{2}$	7 × 2
55	4	$2\frac{1}{8}$	1	$\frac{9}{16}$	7 × 2
60	$4\frac{1}{4}$	$2\frac{3}{16}$	$1\frac{1}{8}$	$\frac{9}{16}$	8 × 2
65	$4\frac{1}{2}$	$2\frac{5}{16}$	$1\frac{3}{16}$	$\frac{9}{16}$	8 × 2
70	$4\frac{3}{4}$	$2\frac{3}{8}$	$1\frac{3}{16}$	$\frac{9}{16}$	8 × $2\frac{1}{4}$
75	5	$2\frac{7}{16}$	$1\frac{1}{4}$	$\frac{9}{16}$	8 × $2\frac{1}{2}$
80	$5\frac{1}{4}$	$2\frac{1}{2}$	$1\frac{1}{4}$	$\frac{9}{16}$	9 × $2\frac{1}{4}$

The system of testing rails is variously carried out by different engineers. Sandberg proposes the following, which is very satisfactory. The supports should consist of solid iron blocks, 4 ft. apart, and the weight, of a ball weighing half a ton. The weight should fall on the head of the rail, weighing 40 lbs. to the yard, Fig. 6182, from a height of 4 ft., and for those weighing an additional 5 lbs. a yard, the increase of fall should be 6 in., so that the fall proper for a rail weighing 80 lbs. to the yard would be 8 ft. Out of every 1000 rails one rail should, at least, be tested, and if not broken, the whole 1000 may be accepted; but if broken, ten rails must be tested from the same make, and for every one of these standing the test, ninety-nine may be accepted.

With the exception of the Great Western and a few other lines, the double-headed rail is almost universally used in England. The accompanying Table II. shows the section of rails most generally employed in different countries.

TABLE II.

Name of Country.	Section of Rail.	Name of Country.	Section of Rail.
America	Single-headed.	France	Single-headed.
Australia	Double-headed.	Germany	Deep flange rail.
Austria	Deep flange rail.	India	Double-headed.
Brazil	Double-headed.	Italy	Deep flange rail.
Canada	Single-headed. / Bridge rail.	Ireland	Bridge rail.
		Naples	Single-headed.
Ceylon	Single-headed.	Peru	„ „
Chili	„ „	Prussia	Deep flange rail.
Denmark	Deep flange rail.	Russia	„ „
Egypt	Double-headed.	Sardinia	Single-headed.
England	„ „	Sweden	Deep flange rail.

It is worthy of remark that the double-headed rail was originally laid down in France and on the Rhenish railways, but latterly the preference has been given to the single-headed form. The bridge rail has also been employed on Brunel's system, and Barlow's rail has been introduced as well on those lines.

Steel Rails.—The increased weight of the engines lately constructed, together with the high speed at which they run, have led to the rapid destruction of the iron rail, and has rendered it highly desirable to resort to steel rails, which are being rapidly introduced on our principal lines

of railways. A steel rail, if hard, should be homogeneous in texture. If hard in some places and soft in others, it is liable to be broken by blows. The value of the steel rail consists chiefly in its being homogeneous, being rolled from a single ingot, without a weld. On the other hand, the iron rail is analogous to a bar of scrap iron, a mass of imperfect welding, on which scale causes want of homogeneity. The chief cause of the destruction of iron rails is not the actual attrition, but the disintegration, which results from repeated blows. When a blow of a certain intensity is given, the iron rail disintegrates, but the steel rail does not. A steel rail of about 85 lbs. to the yard may be fairly regarded as affording the maximum amount of strength, rigidity, and durability that the requirements of locomotive traffic demand.

The operation of rolling cast steel ingots into finished rails has very recently been successfully accomplished by the Philadelphia and Reading Railway Company. The steel was made at the Mid Vale Steel Works, near Philadelphia. It was cast into ingots about 9 in. square, and furnished to the rolling mill to be heated and rolled into rails, weighing 68 lbs. to the yard. The rolling was done by the same rolls which were in ordinary use for the rolling of iron rails. This is a great advantage, as it is an expensive affair to construct new and special rolls unless for a very large order.

The manufacture of steel rails by the Bessemer process encourages the hope, that at length a material has been obtained, which will be able to withstand successfully the wear and tear, which so rapidly destroys its wrought-iron predecessor. About ten years ago, some steel rails were laid down at the Camden Town and Crewe stations of the London and North-Western Railway, where the traffic is of a character so exceptionally heavy, as to wear out iron rails in the course of a few months. A couple of steel rails 21 ft. in length were laid down at the Chalk Farm Bridge, side by side with two ordinary iron rails. When taken up three years afterwards, after outlasting sixteen faces of the iron rails, they were evenly worn on the one face which was alone exposed to a depth of about one-quarter of an inch, and were still capable of being of service. The adoption of steel rails on main lines, where the traffic is sufficiently heavy to justify the expense of laying them down, will prove cheaper in the end, will diminish the breaking up of the road, and add to the safety of the public.

The cost a ton of steel rails is nearly double that of the ordinary iron rails, but if we put the life of the latter at three years, and that of the former at eight, the disproportion in price disappears.

In Fig. 6191 is represented the section of the Bessemer steel rail made for the Great Indian Peninsular Railway. The weight of the rail is 86 lbs. to the yard. From an extensive series of experiments undertaken to ascertain the relative strengths of steel rails, iron rails steeled on the face, and iron rails, the steel rails gave the best results, the mixed rail the next best, the iron the worst. It should be remarked that of all the different forms of iron rails tested, the bridge-form was considerably weaker than the others. In testing rails, if the span between bearings is made twelve times the depth of the rail, the latter will nearly approach the condition of an ordinary solid web girder. The first steel rails, or rather steeled-iron rails, were laid down on the Minden and Cologne Railway, in 1854. The original iron rails on that line lasted only two years, but, by steeling the head, the mixed rail lasted eleven years. These rails weighed 56 lbs. to the yard, and the steel used in the manufacture was only a thin slab of puddled steel about $\frac{3}{8}$ in. The steel portion formed only $12\frac{1}{2}$ per cent. of the whole section; experience, however, subsequently showed that this mere facing of cast steel on the iron was not durable, and that to produce a complete combination of cast steel and iron, which should not undergo disintegration by the vibration of the rail, it was necessary to have as a minimum $47\frac{1}{2}$ per cent. of the section, of steel. Under these circumstances, it would be better to employ the Bessemer rail wholly of steel.

In order to ascertain the relative advantages of steel and iron rails, the directors of the Furness and Midland Railway had a series of tests carried out. For this purpose, steel rails of 73 lbs. to the yard of the section in Fig. 6192, and iron rails of 80 lbs. to the yard of the section in Fig. 6193, were keyed in chairs, placed 4 ft. from centre to centre, with the following results;—The steel rails supported a weight of 5 cwt. falling 20 ft. and 26 ft. respectively, while the iron rails broke with the same weight falling 6 ft. and 8 ft. These trials were considered to establish the superiority of the steel rails, and the whole Furness and Midland Railway was relaid with them.

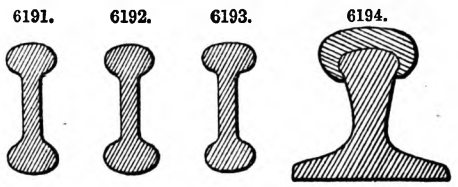

With respect to steeling the top surface of rails, Dod's process was employed with success more than ten years ago. A steel-headed rail is shown in Fig. 6194, which presents some features of novelty.

It is the invention of L. Booth, of Rochester, U.S., and has already been tested in the United States. In making these rails the iron rail is first rolled to the required form. The cap of steel, also rolled to the proper dimensions and the same length as the rail, is then heated moderately, placed on the rail, and the whole is passed through a machine, by which the sides of the cap are firmly closed on the iron; and it is claimed by the inventor, that the squeezing out of the top by the tread of passing trains, causes the cap to fold round the rail, so to speak, and take a firm hold. The first rails tried were put down on a branch of the Pennsylvania Central Railroad. One rail was 28 ft. in length, and the steel cap, not being quite closed in upon the sides, was so loose that it could be easily driven off endwise with a hammer. It was put down where a heavy engine was frequently passing over it, drawing truckloads of iron. The effect was to shift the cap endwise with the moving train, until it struck the adjoining rail, and as the train returned the cap would be carried along as far in the other direction. This effect continued from day to day,

but soon began to abate by degrees, until in three weeks the end action ceased, and the cap began to clinch the head of iron, first at the ends, then approaching the centre, until in the short period of ninety days the entire rail became as solid and firm as if made of one piece of steel, and striking the head with a hammer would meet with reaction equal to striking any piece of iron or steel of the same weight.

Testing Rails.—With the increase in the weight of rails, and consequently in their cost, there is the greater necessity that they should be of good quality, and able to withstand any test of a fair and practical character. Price has recently designed a machine for this express purpose, which tests both the strength of the rail and its powers of resistance with regard to wear and tear.

The various existing methods of testing rails may all be reduced to one of three heads, namely, a dead-weight test, a falling-weight test, and an examination of the section of fracture. The test by a dead weight determines the strength of a rail as a girder, but that is all. The endeavour to ascertain whether a rail has sufficient toughness by submitting it to the action of a falling weight is fallacious, since by its use, rails of a good serviceable quality may be rejected, while bad ones may be passed.

To a practised eye the appearance of the fracture, and that of the planed section after treatment with acid, may be some criterion of the quality and properties of the material, but it is not of a character sufficiently tangible to be inserted in a specification. The machine in question is intended to determine with accuracy, the strength and wearing capabilities of rails both of iron and steel. It consists of a simple arrangement of two or more metal or steel rollers supporting a circular frame which confines them. The frame is connected by radii with a central boss, through which passes a vertical axle, shown in Fig. 6195; or the frame may be cruciform for four rollers, as in Fig. 6196. Another arrangement is shown in Fig. 6197, in which a simple beam passes across the centre for two rollers. In every case, sufficient strength is given to the arms or radii to resist the centrifugal force when revolving.

6195.

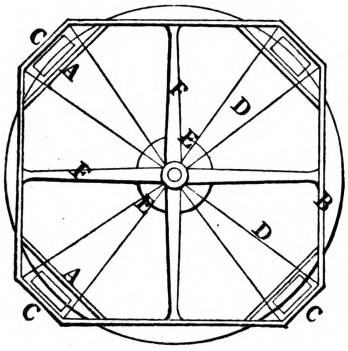

6197.

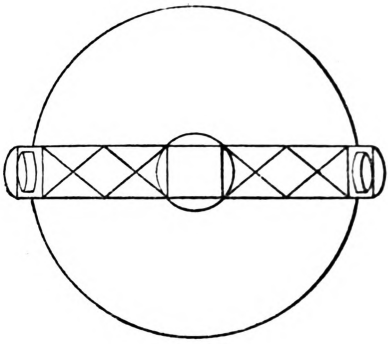

6196.

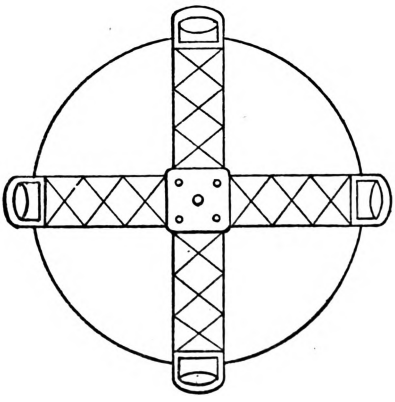

6198.

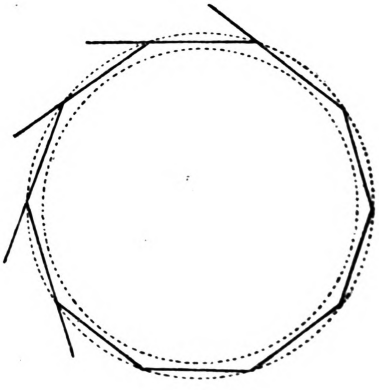

The rails to be tested are formed into a circle or polygon, and are supported on sleepers packed up with ballast in the usual manner. This arrangement constitutes the road under the rollers, upon which they are caused to travel at any required speed, by means of motion communicated to the centre axle from shafting underneath, or by direct action of a pair of cylinders. The frame is sufficiently stiff to bear entirely on the rollers, and the boss is free to move up and down on the vertical axis, so that the machine may adapt itself readily to the inequalities of the road.

The weight with which each roller bears upon the rails, should be equal to the weight on the driving wheel of the heaviest engine likely to be worked over the same rails, when in actual use. The rollers have treads sufficiently wide to work over the rails, arranged as a polygon, as in Fig. 6195, and being portions of cones radiating to the centre at the level of the top of the rails, see Fig. 6198, they will traverse over a polygon as easily as along a curve.

In using the machine to test the strength of rails, some of the sleepers are left out at several

parts of the circle, so that the rails at those places may span double intervals. If a rail takes a set, or breaks under the action of the revolving rollers, it is unfit for use. In order to arrive at a proper margin of strength, the lower member is weakened by cutting or drilling until it breaks. By testing rails of known good quality in a similar manner, a standard of strength may be arrived at. The determination of the wearing properties of a rail, is manifestly accomplished by keeping the machine revolving until the rails are worn out. In all experiments with this machine, Price assumed the truth of the law first demonstrated by Price Williams, according to which, rails are worn out by the action of a certain number of speed tons. Upon this assumption, if ten rails are placed together under the machine, one of which is a standard, it may be accepted that those which wear out before the standard, are inferior to it in quality, and also that those which wear out first are the worst, and that the number of speed tons borne by each is the measure of its value. The wearing effect produced by a machine having four rollers, bearing with a pressure of 7 tons each upon a ring of rails 40 ft. in diameter, and worked at a speed of 40 miles an hour, may be thus estimated;—42 revolutions a mile × 40 miles an hour × 22 hours × 28 tons = 1,034,880 tons a day of 22 hours, allowing 2 hours out of every 24 hours for oiling, packing, and attendance. The total result would be equal to 41,395,200 speed tons a day. A couple of days' work would discover any defective rails, if not, destroy the test.

The machine shown in Figs. 6195 to 6198 consists of a horizontal beam, supported on a pair of metal rollers 5 ft. in mean diameter and 16 in. wide. The circle traversed is 40 ft. in diameter. The rollers weigh 2¼ tons each, and, with the beam weighing 6½ tons, the pair of rollers press on the rails with a total weight of 11 tons. One roller bears with 5 tons pressure, and the other with 6 tons. Motion is imparted to the central vertical axle by means of shafting underneath and bevelled wheel and pinion driven by a steam-engine. The power is sufficient to get up a speed of 20 miles an hour, and a counter is employed to register the revolutions.

From experiments made by Price, it appears that iron and steel rails are very differently acted upon by rolling weights. A steel rail of the section shown in Fig. 6199, weighing 80 lbs. to the yard, and an iron rail, shown in section in Fig. 6200, were tested. Strips were cut from the flanges of both of the rails, and subjected to direct tensile strain. The steel bore 30 tons a square inch before fracture, and stretched 20 per cent. of its length, and was then so tough as to bend double cold. The iron bore only 21 tons a square inch, and stretched only 9 per cent. This indi-

cates that steel, though stronger and apparently tougher under slowly applied strain, is really more brittle than iron under strain suddenly applied, as if the molecules of steel required time to arrange themselves to resist separation. It is to be remarked that all the ordinary types of fish-plates break under this machine. Those with a small flange below as shown in Fig. 6201, alone stand under its action. The rails also show a weakness at the fish-holes. The life of an ordinary iron rail of fair average make, is by this concentrated method of rolling test, equal to not less than 30,000,000 speed tons.

In Figs. 6195 to 6198 A are the rollers, B the beams, C the castings to receive the journals, D the tie-rods, E the bevel driving wheel, and F the driving arms.

Switches, Points, and Crossings.—When a train or single carriage is obliged to leave one pair of metals and run on to another, some contrivance is necessary, in order to effect the transit without interfering with the normal condition of the road. The simplest method of conducting this operation, and one which is always used on contractors' or temporary roads, is to nick the rails at the crossing, or the point where the one pair of rails crosses the other, in order to allow the flanges of the wheels to pass, and to leave about a couple of feet of the ends of the rails loose, that is, held only to the sleeper by a loose working spike or pin, at the place where the junction terminates. By simply moving these loose ends of rails backwards and forwards, the carriages are turned from one pair of rails to the other, or shunted, as the technical phrase is. This crude arrangement will not answer for steam traffic, and it is therefore necessary to provide some better means for accomplishing the shunting. It would be to little purpose to mention a tithe of the numerous railway switches and crossings which have been invented, with the object of facilitating and rendering safe the process of shunting. The principal features will be alluded to, and a sufficient number of examples given to illustrate what constitutes a very important part of the permanent way of a line, especially with reference to the cost of maintenance. One of the early switches was Fox's, in which the outer rail was cut or notched out, for the purpose of admitting the tapered point of the tongue rail when closed, and for lessening the projection presented to the flange of the wheel in running against the points. In some of the switches used on the Great Western line the outer rail is slightly bent at the extremity, so as to form a recess against the end of the next rail, which recess receives the point of the tongue rail, and answers the same purpose as the notch in Fox's switch.

Before proceeding to details it will be well to describe generally the mode by which trains can be transferred from one line to the other while in motion.

The apparatus in common use for this purpose consists of two parts, known as the switch and the points, an example of the simplest form of which, or a single switch, is shown in Fig. 6202. The switch B is made of a movable rail or tongue, tapered at the end so as to lie close to the

main rail, or to be pushed out from it sufficiently far to enable the flange of the wheel to pass in between them.

6202.

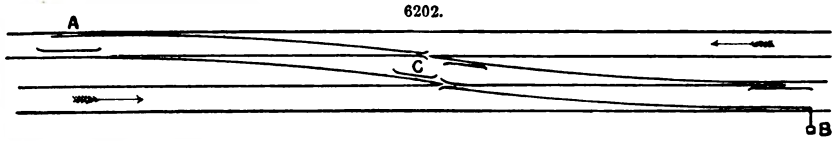

To move the switches, and also to allow them to be, under certain circumstances, self-acting, a lever is employed, having a counterweight acting inside the switch-box, at B in Fig. 6202, which is placed alongside the line with the lever handle projecting. The switches are arranged so that the main line is always kept open, when the lever is not moved. This self-acting adjustment of the lever and switch is not applicable at the entrances of large stations, and special arrangements are provided in such cases. The points C, or crossings, are fixed V-shaped pieces of iron, where one line of rails crosses the other, and are made of iron or steel of superior quality, as they are exposed to an immense amount of wear and tear. The short lines at the points C, parallel to the rails, are check or guard rails, and are intended to prevent any tendency of the wheels to leave the metals. The direction of the traffic up and down is shown by the arrows, that is, it is in the direction to which the V of the crossing points. Were the direction of the traffic reversed, the point of the V would meet the traffic, and the points would be what are termed facing points. These are highly objectionable, and strongly protested against by the Government inspectors of railways, as being a fruitful source of danger and accidents. The danger increases with the speed. In Fig. 6203 is represented the general plan of a three-throw switch. By this arrangement the single line of rails is moved by the switch, which shifts both rails together to any one of the three diverging lines.

6203.

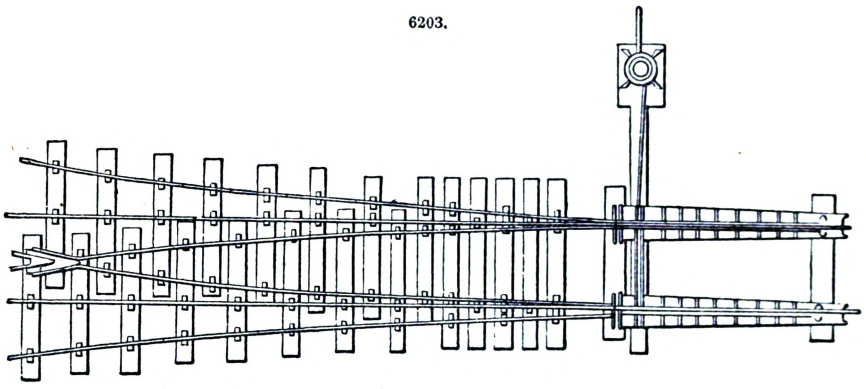

The direction of a train may be reversed, where room permits, by laying in a couple of sidings converging to each other, with a piece of straight at their point of meeting. Traversing platforms are also used for transferring engines or single carriages from one line to another parallel to it.

The weakest places in switches and crossings are those in the outer rails of switches, and the wing rails of the crossings, in the line where the outer edge of the wheels crosses them in a diagonal direction. These parts are exposed to a series of severe blows from the wheels, caused to a great degree by the undulation of the rails, while the train is passing over, the weight of which is sustained alternately by the point rail and the outer rail. The moving or shifting of the various parts of a switch or crossing, which results from this cause, is very injurious, as the least settlement of the rail on which the wheel is running, causes the infliction of a severe blow. In situations in which the traffic is heavy, these parts of the permanent way suffer a very large amount of wear and tear, especially in places where the brake is frequently applied.

In Figs. 6204, 6205, are shown sections of Parsons and Baynes' switch. In the former, the point rails for crossings and the tongue rails for switches were first made solid. This is a good plan, but they do not afford protection to the outer and wing rails which are the most liable to suffer abrasion and concussion. In Baynes' switch there is a deep tongue rail, the seating of which is lower than that of the outer or main rail, the intention being that the tongue rail should keep clean the chair upon which it slides by pushing off, beneath the outer rail, any dirt or ballast which might accumulate there. It is nearly twenty years ago since steel was first introduced in the permanent way of railways. A rail with a welded upper surface of steel was laid down in the goods station of the Great Northern Railway at King's Cross, to form the outer rail of a three-throw switch. The steel surface was 1½ in. in width by ½ in. deep. It was laid down at a spot where the traffic was

6204.

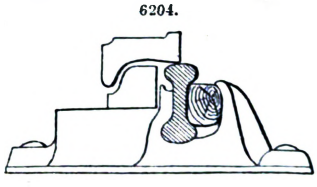

6205.

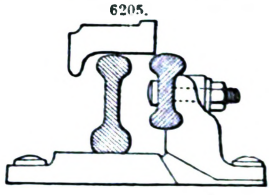

heavy, and the result was that after six months' wear and tear the upper table of the rail for a length of 3 ft. was crushed down and splintered. This proves that the hardest material will suffer from the cutting action, and that rails will eventually be grooved out in a similar manner. Referring to Figs. 6204, 6205, it will be seen that if the tire of a wheel is worn hollow, it will, when running over a switch or a crossing, be actually lifted off the inner rail and carried on the adjoining rail, resting only upon the outer edge of the tire. It is just at this moment that the blow takes effect, which causes a lateral strain upon the wheel and channels or grooves out the rail along the path of the outer edge of the tire. It follows, therefore, that when a wheel which has a worn tire passes over a new switch or crossing, it receives a severe blow on its outer edge, because the section of the tire is not adapted to that of the two new rails. On the other hand, when a new tire passes over an old worn switch or crossing, a similar result ensues, although the blow is then given by a different part of the tire.

In Figs. 6206 to 6208 are shown one of Ransomes and Rapier's most improved form of switches

6206.

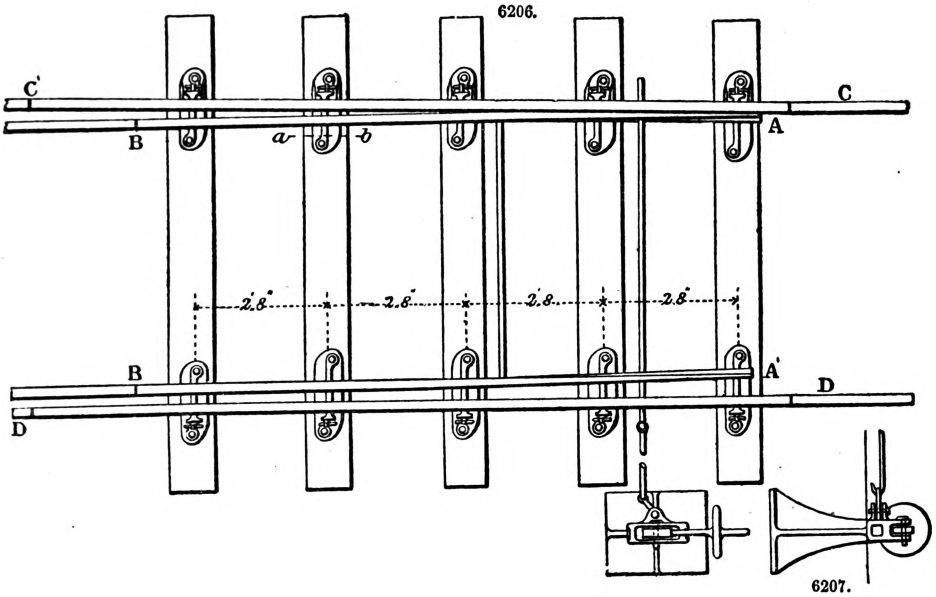

6207.

6208.

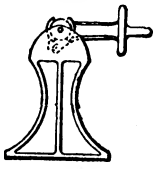

for the ordinary double-headed rail. The switch, or movable part of the rails, comprises the length included between the points A and A', and the heel of the switch at B, B', in Fig. 6206, in which the switch is set so as to shunt the train on to a pair of metals situated to the left of the rails C, C', and A', B', supposing the train to be advancing on the right of the figure. The tongues and stock rails may be of any length that may be desired. In Figs. 6207, 6208, are represented the details of the switch-box, all of which are self-explanatory. When the traffic is light, the tongues may be of steel and the stock rails of iron, which make a very durable and economical switch. The distance-rods can be arranged so as to

6209.

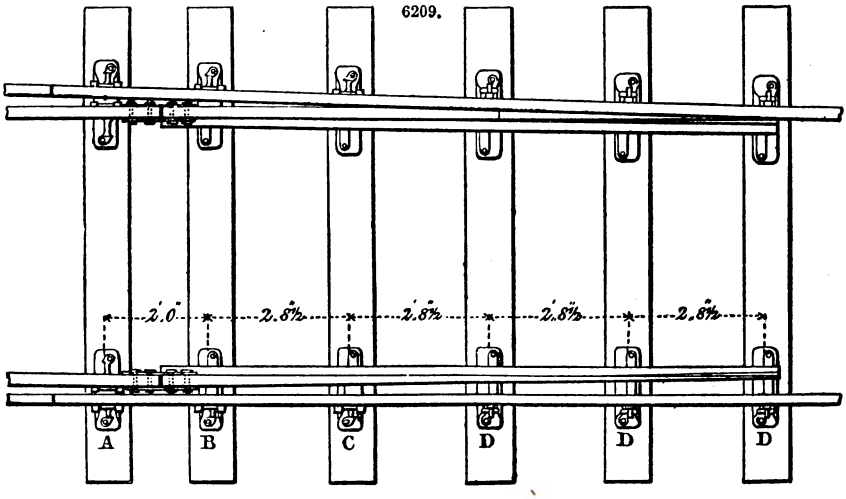

6217.

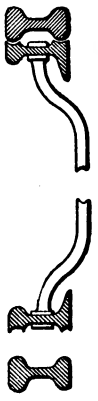

pass through both stock rails, and thus prevent the tongues lifting during the passage of the train. The connecting rods nearest the points can be made so as to enable the points to be padlocked

to either side. A switch by the same makers, with an improved form of tongue, is shown in Figs. 6209 to 6217. Greater lateral stiffness is thus imparted to the tongues, which are well adapted

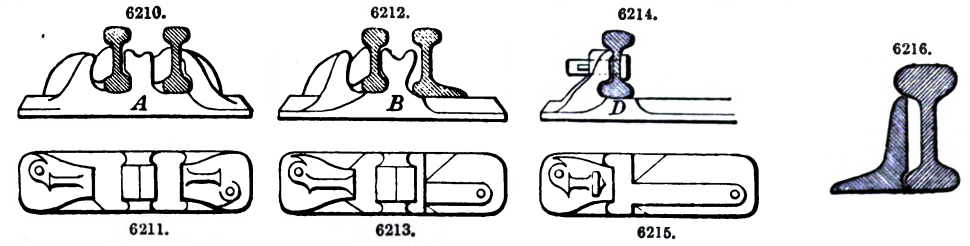

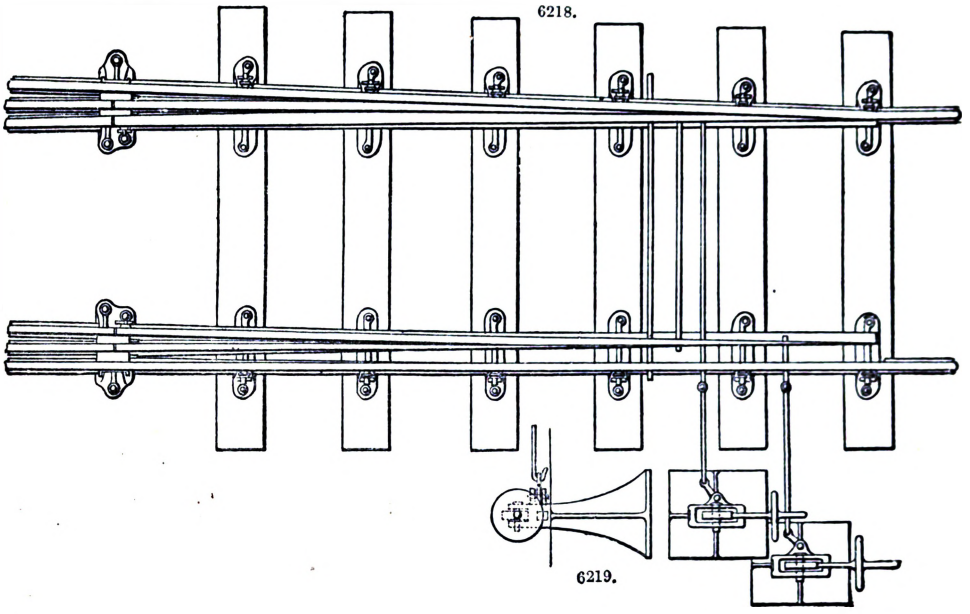

for single-headed rails. The details of the lever and connecting rods are given in Fig. 6217, and the cross-sections and plans at the points indicated by the corresponding letters in Figs. 6210 to 6216. The usual length of the stock rail is 15 ft., and of the tongue 12 ft., but other lengths can be employed as well. In this example the switch is fished at the heel instead of resting on a heel-chair as in the former. A detail drawing of a three-throw switch, of which a general plan was shown in Fig. 6203, is shown in Figs. 6218, 6219. It is suitable for rails of either the double-headed or the Vignoles' shape, and is made either of iron or steel. Instead of one junction with the main line, a couple are made by means of this switch. It is of great use sometimes for the man in charge to know which way the switch is set, which can be managed by means of an indicator.

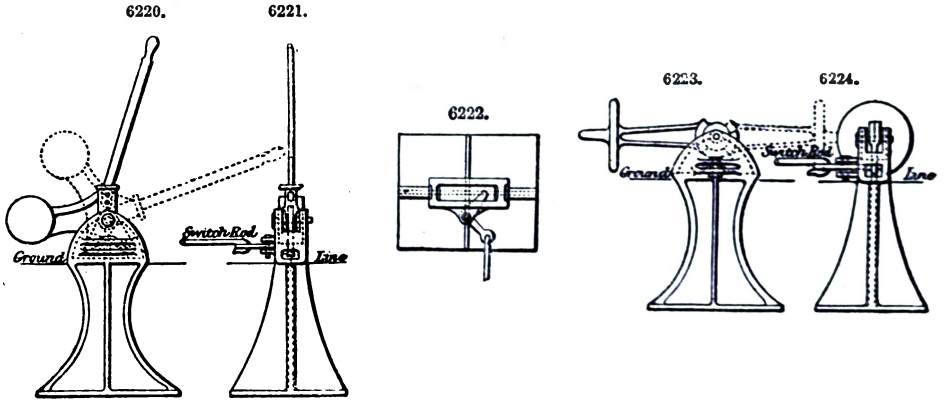

In Figs. 6220 to 6224 a very good example of switch-box, by Deas and Rapier, is represented, which possesses several advantages. The boxes are so constructed that they can be either planted in the ground as in the figures, or bolted on to the end of the switch-sleepers, and as well as the levers are all fitted up to gauges, so that the rigid and turnover handles are interchangeable.

As compared with an ordinary underground box, the following advantages belong to the example selected;—

Including the handle and switch-rod, the whole number of pieces is six, as against about fifty, and the liability to derangement is in the same proportion.

The handle pulls parallel with the road, and therefore takes up less room and is safer, and, together with weight, is so arranged that the pointsman can bring his whole weight on the switches, with the most perfect ease to himself.

It is not liable to be deranged by frost, which is a fruitful source of accident in the cesspool boxes, and is very useful for shunting purposes, as the handle can be set so as to hold the switches either way, and if an engine or wagon runs out of the switches, they always recover close home to the side on which they were last placed by the pointsman.

For goods yards and sorting sidings this is of very great value, as it enables one pointsman to manage several switch-handles with far less fatigue to himself, and also with much greater certainty, and consequent safety and saving of time in arranging trains.

The disc balance-weight faces the driver, and the front and back are painted red and white so as to show which way the switches are set.

Every switch-box is both right and left hand, by simply taking out the bell-crank and turning it over.

It is evident that the points, having been once set for the transit of an approaching train, the next step is to ensure their complete immovability during its passage. This has been accomplished by a variety of locking apparatus under the control of the signalman, which, however, is only one step removed, so far as safety is concerned, from the old plan, where the pointsman simply holds the lever until the train has passed, when it springs back to its original position upon his quitting his hold, drawing the points with it. So long, therefore, as the immovability of the points during the transit of a train is at the option of the pointsman, any carelessness or negligence on his part might allow them to fail in performing this essential duty, and the result would be that some of the carriages firstly, and perhaps all ultimately, would leave the rails. Accidents have frequently occurred from the points being shifted before the whole train has passed over them. To prevent the possibility of contingencies of this nature, and to take out of the hands of the pointsman, all power to shift the points during the passage of a train over them, is the object of the following apparatus, illustrated in Figs. 6225 to 6227. The contrivance is the invention of Livesay

6225.

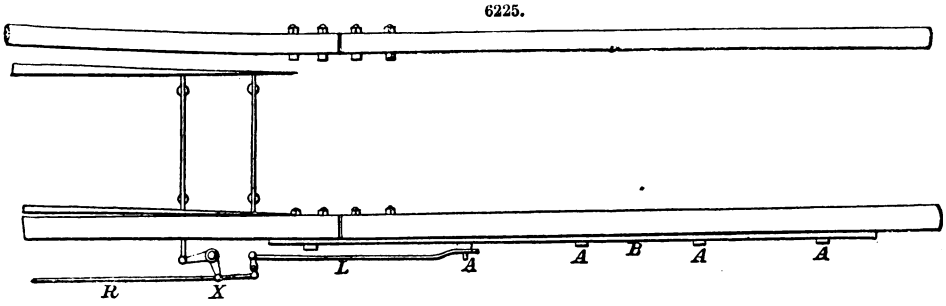

6227.

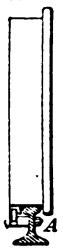

6226.

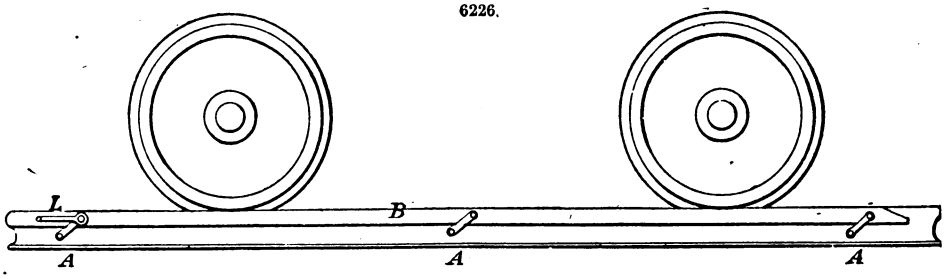

and Edwards. In Fig. 6225 is represented a plan of the arrangement, which, so far as the point X, differs in nothing from the ordinary plan of working switches. Both in the plan, Fig. 6225, and in the elevation, Fig. 6226, B is a flat bar of ½-in. wrought iron, held against the upper side of the rail and flush with its top surface. A lever L, joined to the ordinary lever R at the point X, works isochronously with it, imparting a motion to the bearings A, and causing them to make a semi-revolution every time the switch is shifted. The result of their half turn is to move the bar backwards and forwards through a longitudinal space of 4 in., raising it at the same time to a maximum height of 1 in. over the top of the rail. The train during its passage presses upon the upper edge of this bar with the same force as upon the rail, and since the points cannot be moved without at the same time moving the bar, and raising it during the motion an inch above the rail, it is manifest that their complete immovability is ensured, unless we suppose the pointsman endowed with sufficient strength to lift the bar, train and all. In Fig. 6225 the bar is shown attached to the bearer A, which is, in fact, a centre of motion, with the wheel resting upon it. The weight of the train keeps the bar down, and virtually locks the point itself, making all the arrangement self-acting. There is no necessity for the bar

being longer than what is sufficient to take two wheels, as shown in the elevation; but it should never be less than this, for if a carriage were to tilt, and the pressure, consequently, taken off a couple, there would be none upon the rail or bar throughout its length, and theoretically the points might then be shifted, although it is doubtful whether in actual practice there would be time enough for accomplishing it even wilfully. Another advantage arising from this little piece of mechanism is that it will altogether relieve the pointsman from all uncertainty respecting the passage of the train. He will have no occasion to consider whether the train has passed or not, for so soon as it has passed he may reset the points, and he will not be able to do it before, either wittingly or unwittingly. Every precaution, even to superfluity, should be taken upon our railways to ensure the impossibility of accidents.

Crossings.—These portions of the permanent way may be of cast iron, wrought iron, steel, or chilled metal, and they may be laid according to one of two principal methods. They may be laid on chairs differing only in size and slight details from those in use on the line, or they may consist of one large plate or sole-piece with the crossing rails attached to it. Figs. 6228 to 6230 represent

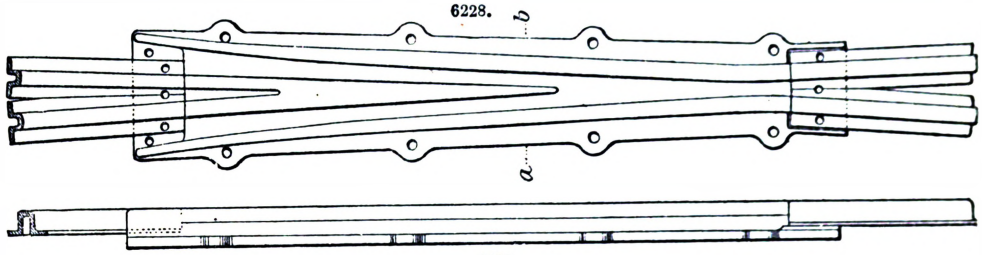

plan, elevation, and section of one of Ransomes and Biddell's chilled crossings, as introduced on the Great Western and other lines where the bridge rail is used. The hard wearing surface of these crossings is obtained by a mixture of irons of superior quality, which renders them very durable. They are bolted down to the sleepers, and their life, with about 300 trains running over them every day, is stated to be five years. A lighter description of this crossing is made for siding purposes, and for situations where the traffic is not so heavy. A similar example is represented in Figs. 6231 to 6233, in which the rails are fished to the crossing through the web, instead of being bolted down through the flanges, as in the case of the bridge rail. This crossing is intended for a road laid with transverse sleepers. Figs. 6234 to 6238 show the other principal type of crossing, in which the crossing is laid on chairs fixed to transverse sleepers, and not on one continuous

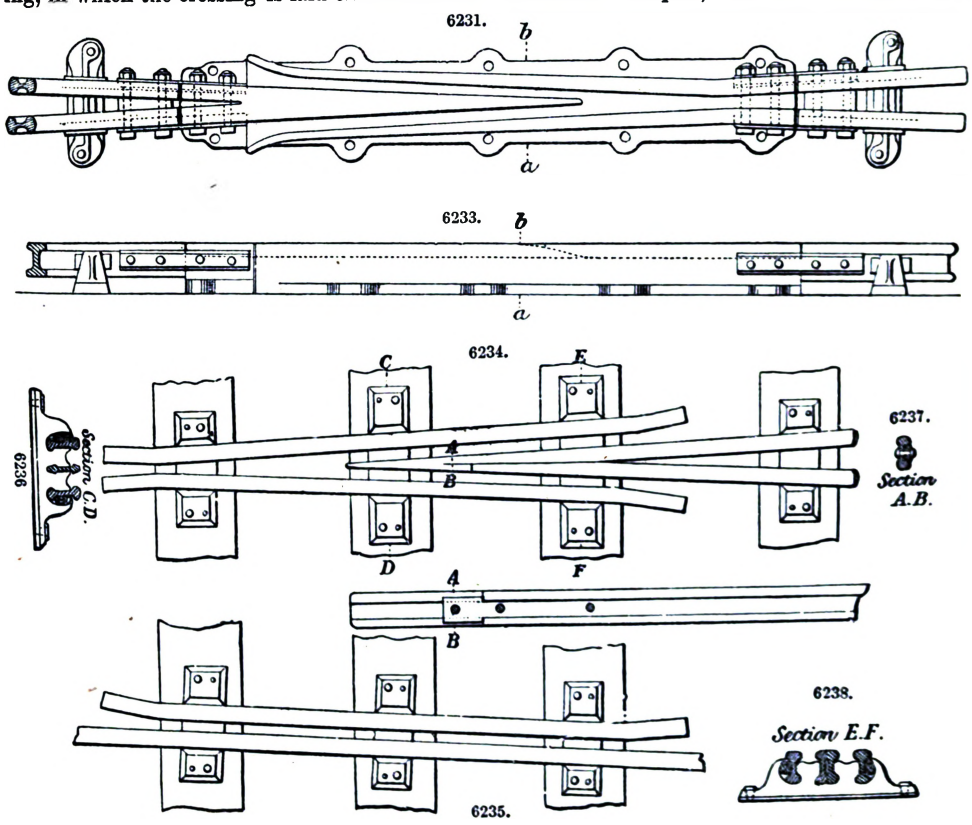

sole-plate. This is the crossing which is adopted on a large scale on the London and North-Western Railway. In Fig. 6237 is shown the end of the splice rail which is shaped down to a fish-plate form, and thus a firm fastening is obtained beyond the point of the V, shown in elevation in Fig. 6235, and the two rails are securely held together. This crossing is reversible, and can be made of either steel or iron rails. The rails are held partly by the under keys and partly by the jaws of the crossing chairs, as represented in Figs. 6236, 6238.

A crossing differing somewhat in details from those already described is represented in Figs. 6239 to 6244. It is intended for the Vignoles' rail, and has a solid steel V and wings made

6239.

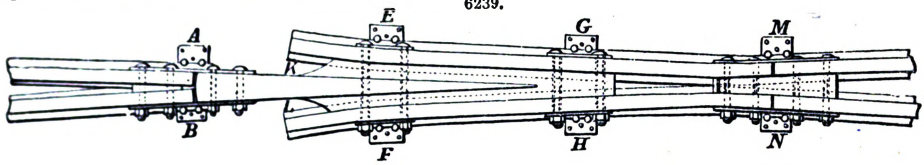

6240. 6241. 6242. 6243. 6244.

6245.

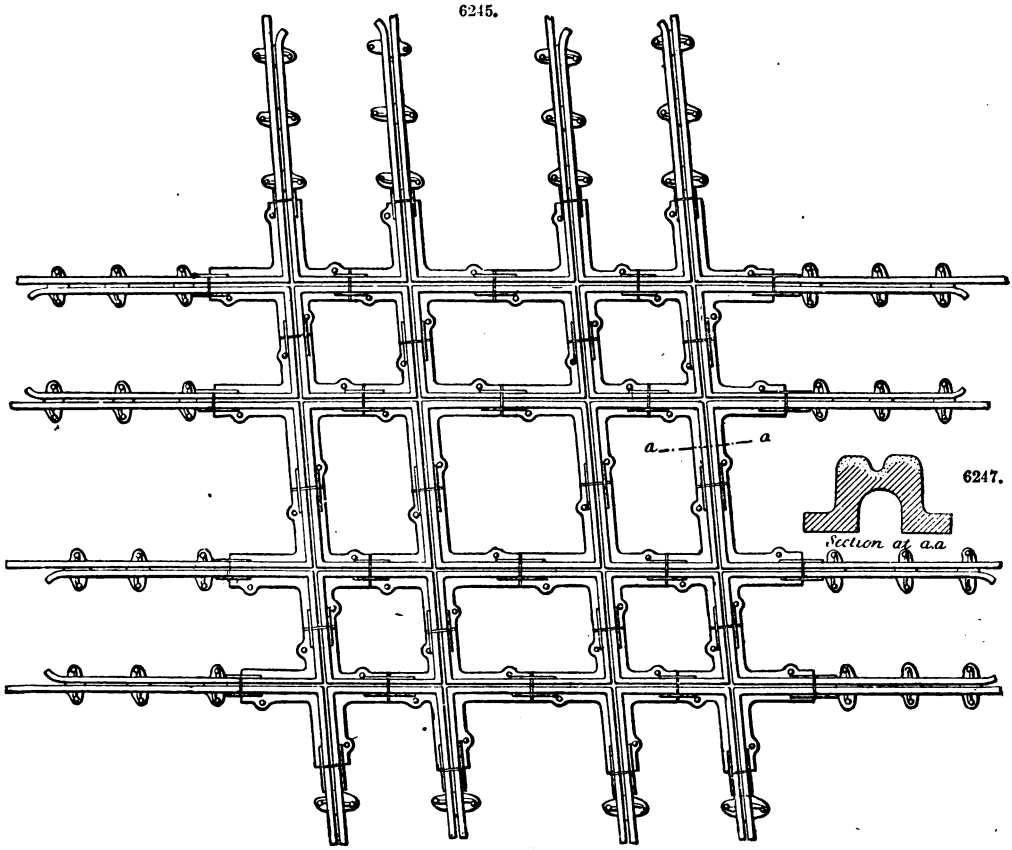

6247.

of steel rails, and possesses the advantage of considerable elasticity, being made entirely of wrought iron and steel. In the figures the chairs are shown of wrought iron, but cast-iron ones can be used if preferred. The rails are bolted to the crossing and fished as well, and the comparative shortness of the wings is a noticeable feature in the example. It is not often that one railway crosses another at right angles on the level, but there are instances in existence. To meet this contingency, one of Ransomes and Biddell's level crossings for main lines is shown in Figs. 6245 to 6247. It can be made to any angle, and certainly possesses the advantages of simplicity and cheapness. Fig. 6246 is an enlarged plan, showing the method of attaching the rails, and Fig. 6247 a section at *a*, *a*, in Fig. 6245.

6246.

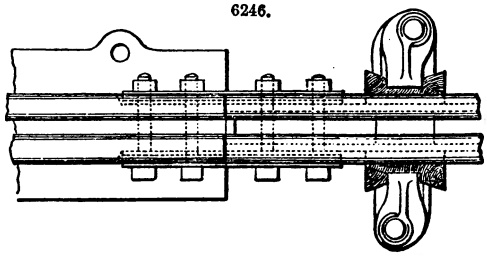

Switches made after the ordinary type are constructed of the rails forming the permanent way. In the case of bridge rails of the pattern laid down on the Great Western line, the top surface of the rail and part which fits against the stock rail are the parts bevelled off. When the rails are of the double I, or flat-footed section, the part of the upper flange not in contact with the stock rail is planed off, so as to bring it flush with the web at the point of the switch. The switch must be planed off gradually from the heel. In the examples given of switches and crossings, it will be seen that the manner in which they are connected, both with the rails of the permanent way and the sleepers, depends upon the section of the rails and the character of the road, whether longitudinal or transverse. Some sections of rails are very troublesome to fit a crossing to, and, in consequence, are rarely laid down in the vicinity of large junction stations and depôts. The life of a crossing, similar to that of a rail, depends upon the weight and frequency of the traffic running over it. It has been estimated that on the Midland Railway, or other line of average heavy and fast traffic, the life of an iron rail is, according to circumstances, from ten to sixteen years. An iron crossing, with the surface neither steeled, chilled, nor hardened by any extraneous process, would, in the same position, not last as many months. It was probably the recognition of the value of steel in crossings, which led to the gradual adoption of it in other parts of the permanent way. Crossings, being those portions of the road which suffered most severely from the effects of the traffic, were the first to benefit by the improved means taken to increase their durability and powers of resistance, which are now being extended to the whole permanent way.

Permanent Way in the U.S.—On some of the early examples of railways in the U.S. a peculiar description of permanent way was used, called the Trellis, which deserves a brief notice. It is shown in plan and cross-section in Figs. 6248, 6249, and consists of planks or timbers *a*, *b*, *c*, about

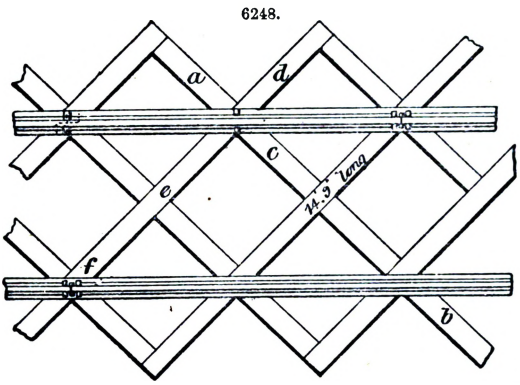

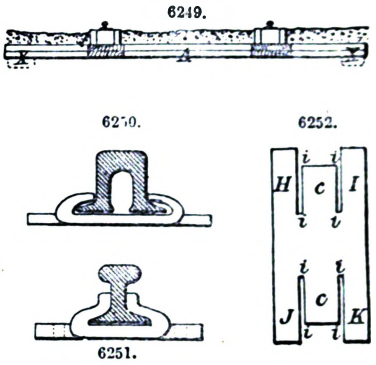

14 ft. 9 in. long, 8 in. in width, and 3 in. in thickness, laid diagonally on the centre line of the track, 56 ft. apart from centre to centre. These oblique planks are crossed by other timbers of the same dimensions, laid upon the former without notching, in the opposite direction, nearly at right angles with the first series. These planks intersect each other on the centre line of the track, underneath the two longitudinal bearers and rails. The width of the trellis foundation is 10 ft. 8 in. when the gauge is 4 ft. 8½ in. The intersection of the timbers is secured by a couple of stout wooden pins K, K, driven obliquely and nearly at right angles to each other. The longitudinal bearers L are 20 ft. in length, 8 in. wide, and 5 in. thick. The chair used is shown in Figs. 6250 to 6252. It is of slightly different form, according to the section of rail it has to receive. It consists of a flat plate of rolled iron, see Fig. 6252, from ½ in. to ¾ in. in thickness, and has four cuts *i*, *i*, *i*, *i*, made in it, and also two holes at *c* to receive the bolts for securing the chair on the trellis. The four wings I, K, and J, H, are bent up while hot, so as to embrace the base or middle of the T rail to support it, as in Fig. 6251 or as in Fig. 6250, if the bridge rail is used. The bed of the chair is let into the upper of the diagonal timbers, so that the rail may bear continuously on the timber, and the whole is secured by a pair of ¾-in. screw-bolts. The chairs made for the Baltimore and Susquehanna Railway were 5 in. wide, ½ in. thick, and weighed on the average 5·82 lbs. each. The middle part for the bolt-holes was 8 in. long and 2 in. wide, and the bent-wings J, H, I, K, which clip the rails, were each 1½ in. in width.

There have been a few modifications of the system shown in Figs. 6248 to 6252. The rail-bearers in one, instead of resting directly on the diagonal timbers, have been placed on transoms extending right across the track. In others, the diagonal timbers have been increased in number, and placed closer together, so as to form more of a cradle foundation. The quantity of timber required in a road of this description, would altogether preclude its adoption in any country but one which possessed large primeval forests. Moreover, the packing of so many sleepers, for all the diagonal timbers may be considered in that light, would be very troublesome; and it is doubtful whether, with the greatest care, a road of that kind would ever be kept in the same condition in which the lines are maintained in this country. The use of the diagonal sleepers, as ties to keep the track in gauge, is not attended with the success which might be anticipated. Diagonal ties have been tried in England and elsewhere and found wanting. Where timber is plentiful, and the ground very sloppy and bad, the trellis foundation may be temporarily used with advantage, and the larger the timbers the better. It is, however, entirely unsuited to a finished road or to the requirements of a heavy and fast traffic.

The flat tie-bar rail was originally used on the railways in the States, and was superseded by the foot rail with a broad foot or base, to be fixed to either longitudinal or transverse

sleepers. It was bolted down to them through holes in the foot, and was generally known as the Stephenson and Vignoles' rail. This rail, fastened down with spikes, was extensively employed, although it was the source of numerous accidents. At present the single-headed rail, with a broad flange to prevent the wooden sleeper being cut into by the rail, is the favourite one in America. The joints are secured either by the ordinary fish-plates, or on the principle of the bracket-joint already described. Although steel rails are fast coming into use in the States, the above section of rail is still adhered to pretty generally. The material is changed, but the form remains the same. The weight is increased in most instances. In Canada, on the Great Western line, the single-headed rail is also used; but on the Grand Trunk the preference is given to the bridge section, which is not laid according to Brunel's system on longitudinal sleepers, but on cross sleepers. Opinions of engineers differ respecting the relative merits of these two methods of laying down the bridge section of rail.

English Permanent Way.—With a few exceptions, the transverse road and the double-headed rail may be regarded as the standard type of permanent way in England. This road is not the result of any undue preference or prejudice, but is that which experience has proved to be best adapted for the exceptionally heavy traffic, and very high speeds which prevail on the great main lines. There is scarcely a railway in the country upon which experiments have not been made with nearly every description of permanent way, which has been described in our present article, which offered any promise of success. As an example, many miles on the Great Northern Railway were laid with flat-bottom rails upon longitudinal sleepers, and after being in work for twelve years, they had to be taken up. In exactly a similar situation, the double-headed rail lasted eighteen years. It must not be supposed from this that the flat-bottom rail laid on longitudinal sleepers will not make a good road. On the contrary, it makes a good and cheap road for light traffic.

No better idea can be formed of the increase in the scantlings and weight of the various parts of the permanent way in this country, than by comparing the original road of the Great Northern line, with that in present use. Although we have selected this line for the sake of illustration, the same change has taken place in all others. The road is now, and always was, a transverse one, with a double-headed rail. The original rails weighed 72 lbs. to the yard, and were in lengths of 18 ft. There were two descriptions of chairs—joint and intermediate. The former weighed 40 lbs. each, and the latter 21 lbs., and were secured to triangular sleepers 13 in. × 6½ in. Subsequently the joint-chairs were replaced by Adams' joint-bracket chairs, which, however, were not found to answer, and fish-plates were substituted for them universally. Now, let us compare this with the present road. While the same form of rail is retained, the weight is increased to 82 lbs. to the yard, the length to 21 ft.; and the chairs, which are only intermediate, are 35 lbs. instead of 21 lbs. They are fixed to the sleepers by a couple of spikes and a treenail. The fish-plates weigh 25 lbs. the pair. So far as the sleepers are concerned, the present are rectangular in shape, with a scantling of 10 in. × 5 in., instead of triangular, 13 in. × 6½ in.; so that the absolute sectional area of each sleeper is diminished in the proportion of 50 to 84·5. But to counterbalance this, the present sleepers are placed much closer together, being 2 ft. 8½ in. apart from centre to centre, and only 2 ft. apart at the joints. This is as near an approximation to a close-planked road as the spaces required between the sleepers for packing will permit of.

Permanent Way of the North London Railway.—In Figs. 6253, 6254, is one of the most modern

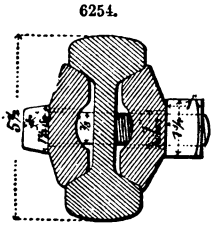

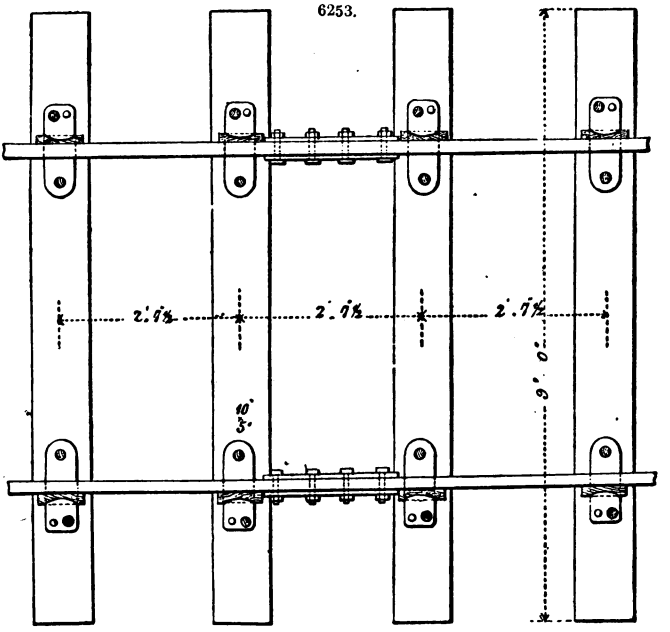

examples of the English system of permanent way. Fig. 6253 is a plan of the road, and Fig. 6254 a cross-section of the rail and fish-plates at the joint. The sleepers are rectangular in shape, 9 ft. long × 10 in. wide × 5 in. deep. They are creosoted, and placed at regular intervals of 2 ft. 7½ in. apart from centre to centre, thus constituting a very closely-laid road. The chairs are of cast iron, weighing 42 lbs. each, and are secured to the sleepers by one spike 1 in. in diameter and two treenails 1⅛ in. in diameter. The rails are of steel, of the double-headed section, 21 ft. in length, 5½ in. in total height, and weighing 80 lbs. to the yard, and are fastened to the chairs by the ordinary compressed wooden keys. The joints are on the suspended principle, and are secured by

a pair of fish-plates, 2 ft. in length and four bolts $\frac{7}{8}$ in. in diameter, two on each side of the joint, with holes 1 in. in diameter. On referring to Fig. 6254, it will be seen that the fish-plates are made with a hollow at the middle, on the side next the rail, and in fact do not in any direction press against the web of the rail, but take their bearing exclusively on the upper and lower heads, which is their proper position.

The chairs on this line are heavy in comparison with those of other similar roads, even after allowing for the increased weight of the rail. But, as a rule, chairs are lighter than they ought to be, from false ideas of economy on the part of railway companies.

In the Permanent Way of the Metropolitan District Railway, the rail is of the single-headed form, of steel, and weighs 84 lbs. to the yard. The joints are made by fish-plates, each pair of which, with its bolts, weighs 25 lbs. There are two fang-bolts to each sleeper, weighing complete 5 lbs. The sleepers are creosoted 9 ft. × 5 ft. 11 in., and weigh each 1 cwt. 17 lbs.

Continental Permanent Way.—With the exception of the single-headed rail being preferred to the double-headed, the roads on the Continent are merely imitations, and sometimes very inferior imitations, of the English. On the Prussian railways the general type of permanent way consists of a Vignoles' rail, weighing 62 lbs. to the yard, laid upon cross sleepers, to which they are spiked, the joints being secured with fish-plates. On the lines in Norway and Denmark, upon which the bridge rail is used, it weighs 60 lbs. to the yard, and the longitudinal sleepers upon which it rests are laid upon cross sleepers. The rails are connected at the joints by joint-plates. This plan was previously introduced on the Wakefield line, where the road was laid with bridge rails, weighing 75 lbs. to the yard, upon longitudinal sleepers, which were fastened to cross sleepers placed under the joints. The rails were riveted to the joint-plates with rivets $\frac{3}{4}$ in. in diameter, a plan which experience afterwards proved to completely fail. The preference given to the single-headed rail in France, and elsewhere on the Continent, is probably due to the fact that the traffic is not of so heavy a description, either in actual weight or wear and tear, as in England. Hence a lighter and cheaper permanent way will answer all purposes. There is, however, similarly, a decided tendency to increase the weight of the rails laid down on the recently-constructed Continental railways. As the locomotives become heavier, so must the road be modified to suit them.

One of the most prominent permanent ways on the Continent is that laid on the Semmering incline, which deserves a brief notice.

Semmering Railway.—The permanent way laid down on the Semmering Railway, although the line is only $25\frac{1}{2}$ miles in length, is one of the most remarkable instances existing of a combination of heavy gradients, with sharp curves. The road consists of flat-based rails, weighing from 64 to 76 lbs. to the yard, resting on cross sleepers, which are spaced 3 ft. $1\frac{1}{8}$ in. apart from centre to centre. These cross sleepers are again supported by longitudinal timbers, into which they are let, and held firmly in their place by small angular brackets. The rails are $4\frac{3}{8}$ in. in depth, and have a similar width of base, with a head $2\frac{1}{4}$ in broad and a thickness of $\frac{17}{20}$ in for the central web. The usual length of the rails is 18 ft. 8 in. The joints are made fast by fish-plates with four screw-bolts, and underneath are placed wrought-iron chair-plates to prevent the working of the ends of the rails into the sleepers. A similar plate, but of smaller dimensions, is interposed between the base of the rail and the timber at each of the intermediate bearers. The joint-sleepers are $12\frac{1}{2}$ in. in width and $6\frac{1}{4}$ in. in thickness, and the intermediate sleepers are 9 in. × $6\frac{1}{2}$ in. wide. The wear and tear on this road is very great, but it is maintained in excellent order, which is owing, in a great measure, to the good ballasting.

The flat-footed rails, on the Continent generally, are fastened to the sleepers with dog-headed spikes, which clip round the foot of the rail, but make no holes in it, as is frequently the case on other lines upon which this rail is used. There is a small detail also peculiar to the fish-plates, which are hollowed on the side next the rail in the usual manner. But, in addition, there are a couple of small projections on the outside, at the bolt-hole, which serve to hold the head of the bolt firmly in its place. The chief reason why a lighter rail can be used on the lines abroad, is not so much on account of any difference in the actual weight of the traffic running over them, but because the speed is very much less. A common load upon one driving wheel is about $5\frac{1}{2}$ tons.

Irish Permanent Way.—The description of permanent way, adopted on the majority of the Irish lines, is due to John Macneil. The rail is of the bridge form, shown in Fig. 6255, and weighs 83 lbs. to the yard run, and presents some slight difference in its shape from others of the same type, such as those used on the Great Western Railway. It is $3\frac{3}{4}$ in. in height, and $5\frac{5}{8}$ in. broad at the base. The thickness of the head is 1 in., and the space between the inner edges at the bottom is also 1 in. Fig. 6255 shows that the exterior sides are closer together at the bottom than at the top, thus forming a kind of dovetail. This particular shape cannot be imparted to the rail at the time it is rolled, but is given to it by passing the rail on edge between a pair of jaws, by which it is compressed into that form as in Fig. 6256. Contrary to the general practice, the rail is laid on transverse sleepers, shown in plan and elevation in Figs. 6257, 6258. At the joints, the sleepers

6255.

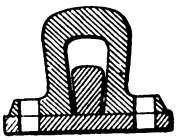

6256.

6258.

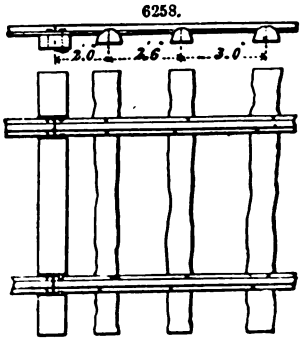

6257.

6259.

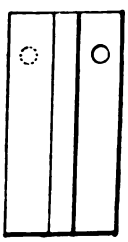

are half balks of red pine, 12 in. × 6 in., but the intermediate sleepers are either of larch or Memel, and measure at the smallest end not less than 8 in. × 4 in. The joints are made by chairs, shown in Fig. 6259, of rolled iron, 12 in. long by 6 in. wide and ½ in. in thickness, and having in the central part a ridge 1 in. in thickness and 1¾ in. in height, rolled as accurately as possible to fit the hollow of the rail. In laying the joints, each end of the rails is passed over the ridge, and a good blow or two with the hammer makes all secure. To attach the rail and chair to the joint-sleeper, at one end of each rail a bolt ¾ in. in diameter passes through each flange of the rail, and also right through the chair and sleeper. It is then fastened by a nut of a triangular shape of wrought iron ¼ in. in thickness. The ends of this nut are turned up, as in Figs. 6260, 6261, so that when the bolt is screwed up from above, they are forced into the timber and hold immovably. In order to allow for expansion, one end of each rail is not rigidly fixed to the chair, but is fixed in such a manner as will allow it to slide backwards and forwards on the chair and sleeper. It is prevented from moving in a vertical and lateral direction by a clip-bolt, shown in Fig. 6260, which is driven on the outer edge of the chair and flange of the rail. Ordinary spikes, roughly pointed, see Figs. 6262, 6263, are used for attaching the rails to the intermediate sleepers.

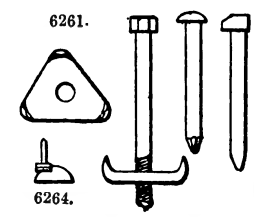

In addition to the spikes a bed is cut in the sleepers to fit the rail. The chairs are placed only at the joints. In Fig. 6264 is shown the position of the cutter when cutting the bed in the sleepers. Its spindle is placed at a slight angle with the vertical in order to give the proper inclination to the bed to correspond to the conical tire of the wheel. The intervals between the sleepers, which are not equal, are shown in Fig. 6257. The advantages claimed for this description of road are that it cannot get out of gauge; that the expense is saved of renewing and tightening up keys, and that it is a very easily packed road. The total weight of the wrought-iron fastenings to each rail, 15 ft. in length, is 41 lbs., of which the joint-chair weighs 16 lbs. The fastenings on this road, like all others, are liable to be loosened by vibration. The pins and triangular-spiked plates were used on the Great Western Railway, but it was found that the coach screws used for fastening down the rails would not hold by reason of losing their thread. The principle of the bridge rail laid upon transverse sleepers, has been pronounced by many engineers to be unsound in both theory and practice. A single line of rails, weighing 80 lbs. to the yard, of that description of permanent way was laid on the Brighton and Chichester Railway, but subsequently abandoned for another in which double **I** rails weighing 75 lbs. a yard, and cast-iron chairs of 24 lbs. and 28 lbs., were employed.

TABLE III.—SHOWING DETAILS OF THE DIFFERENT PERMANENT WAYS IN USE UPON THE PRINCIPAL RAILWAYS IN ENGLAND AND ABROAD.

Name of Railway.	Description of Road.	Sleepers.	Chairs.	Joints.	Section of Rail.	Weight of Rail in lbs. a yard.	Weight of Chairs in lbs.
Great Western	longitudinal	timber	none	chairs	bridge	75	..
London and North-Western	transverse	,,	cast iron	fish-plates	double **I**	80	..
Midland	..	,,	..	..	..	..	..
Great Northern	,,	,,	,,	,,	,,	82	35
South-Western	,,	,,	,,	,,	,,	75	..
North London	,,	,,	,,	,,	,,	80	42
Metropolitan District.. ..	..	,,	none	..	single-headed	..	..
London, Chatham, and Dover	..	,,	..	..	..	..	..
South-Eastern	,,	,,	cast iron	,,	double **I**	75	28–30
London, Brighton, and South Coast	..	,,	..	..	..	..	..
Great Eastern	..	,,	..	..	..	..	..
Bombay and Baroda	,,	,,	,,	,,	,,	65	..
Madras	,,	,,	,,	,,	,,	82	21
Great Indian Peninsular ..	,,	,,	,,	,,	,,	65–84	..
Scinde and Punjaub	,,	,,	,,	,,	,,	66–84	22
East Indian	,,	,,	,,	,,	,,	73–84	22–25
Egyptian	..	Greaves' sleepers, 80 lbs. each.	..	..	..	..	..
Norwegian	,,	timber	none	,,	Vignoles	37–40	..
Rio de Janeiro	..	Greaves' sleepers, 80 lbs. each.	..	..	double **I**	65	..
Lisbon and Santarem ..	,,	timber	cast iron	chairs	single-headed	60	20–30
Santiago and Valparaiso ..	,,	,,	none	..	,,	84	..
Festiniog	,,	,,	cast iron	,,	,,	30	10–13
San Francisco	,,	,,	,,	fish-plates	double-headed	72–80	24–39
Continental Lines	,,	,,	none	,,	single-headed	64–76	none
Australian Lines	,,	,,	..	..	..	..	..
American, U.S.	,,	,,	..	..	..	..	..
Canadian Lines	,,	,,	..	..	..	..	..
Irish Lines	,,	,,	wrought iron	chairs	bridge	83	..
Mauritius	,,	,,	..	..	..	..	..

It is worth noting that a rail which dispenses with cast-iron chairs, and is fastened directly to the sleepers, possesses some advantages which deserve attention. But the same, and probably, superior advantages can be obtained by the employment of the single-headed, flat-footed rail, such

as is used on the Continent. Of all the forms of rails, the bridge section is that which is the most seldom laid down on new railways, and at no distant date will probably be abandoned. Other sections are used in Ireland, as described under the section Rails in the present article, but the bridge is the distinguishing type of rail laid down. As a proof of the great increase in the weight of rails, it may be mentioned that the permanent way of the Dublin and Kingstown line was originally laid with rails weighing 42 lbs. to the yard, and fixed in the primitive fashion to square blocks of granite.

In Table III. are given the principal features of the more important permanent ways in use at home and abroad. It is not to be understood that other descriptions of roads are not occasionally employed, but those given in the Table represent the most general types.

Larmenjat System of Permanent Way.—This description of road, which is of a peculiar and novel construction, has been very recently successfully introduced in Portugal. In general principle, it consists of longitudinal planking for the driving wheels of the engine, which are broad, and have no flanges to run on, with one rail laid in the centre of the track to keep the engine on the road. A leading and trailing central wheel with double flanges on the engine, grip the rail. In Fig. 6265

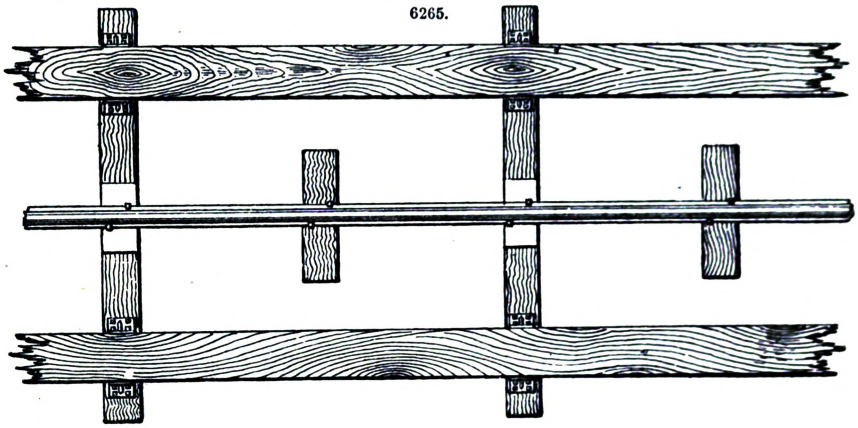

6265.

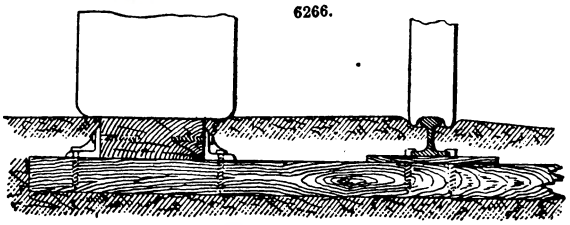

6266.

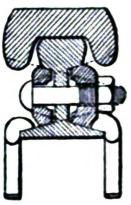

6272.

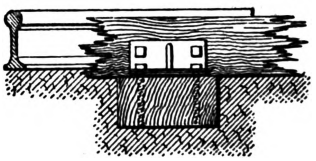

6267.

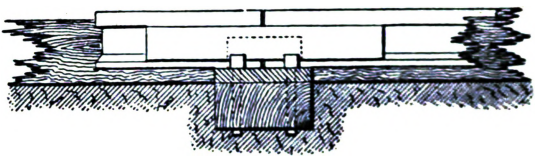

6268.

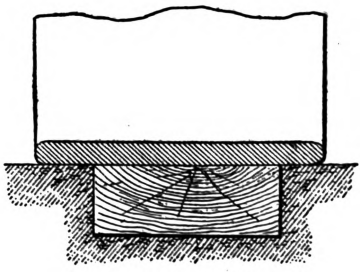

6269.

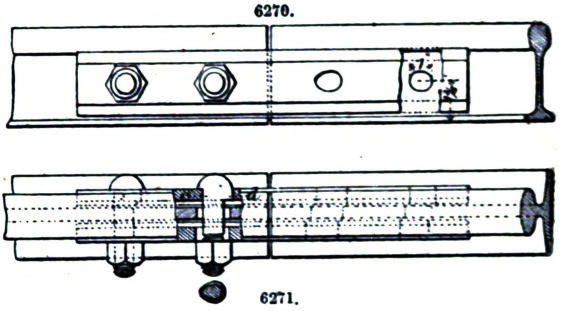

6270.

6271.

a plan of the way is shown. The longitudinal planks, or wooden rails, are laid apart at intervals of 6 ft. upon cross sleepers; the central rail, which is of iron, is supported on these cross sleepers, and also upon short intermediate ones, placed half-way between the longer ones, so as to

afford a bearing of 3 ft., measured from centre to centre. The gauge from the centres of the longitudinal planks is 4 ft. 2 in. The planks are 9 in. × 4½ in., and the cross sleepers 6 in. × 3 in. × 6 ft. in length from out to out. A cross-section of half the road is shown in Fig. 6266, in which is seen the driving or traction wheel of the engine, and the central wheel. The longitudinal planks are attached to the cross sleepers by small angle-iron brackets and four wood screws, as in Fig. 6267. The manner of securing the central rail to the cross sleepers is shown in Fig. 6266. The top of the rail is maintained nearly half an inch above the longitudinal planks, by a packing strap, 12 in. × 6 in. × ⅝ in., shown in Figs. 6267, 6268, and is double-spiked on sharp curves. Fig. 6269 represents a section of the tire of the driving wheel, which is 1 ft. 2 in. in breadth, and 1⅛ in. in thickness, and projects over the edges of the longitudinal planks. The object of this is to prevent the wheel being affected by any trifling sinking of the planks. An elevation of the rail joint is shown in Fig. 6270 and a section in Fig. 6271, which explain themselves. A cross-section of the rail at the joint is given in Fig. 6272, showing the fish-plates, and the mode of securing the rails to the sleeper by dog-headed spikes. All the bolts in the rails have Whitworth standard threads, and the nuts do not in any case exceed ¼ in. over small diameter.

Light Railways.—As a good type of light railways, or lines intended to act as feeders to main routes, and also as well adapted for countries which have not committed themselves to any standard gauge, the Norwegian lines may be mentioned. The permanent way upon these lines consists of flat-bottomed rails weighing from 37 lbs. to 40 lbs. to the yard, fished at every 21 ft. with plates 11 in. in length, and secured by dog-spikes only to transverse sleepers 2 ft. 6 in. apart from centre to centre. No fang-bolts or joint-plates are employed. The sleepers, which are of pine, are 6 ft. 6 in. long × 9 in. × 4½ in. in section, uncreosoted and half round, laid with the round side up, and adzed to increase the bearing of the rail to 5 in. An inward cant of 1 in 20 is given to the rail. In Fig. 6273 is represented a cross-section at the joint of the rail and fastening used on the light railway from Arconum to Conjeveran in the Madras Presidency. The rail weighs 35½ lbs. to the yard. It is properly fished and secured by dog-spikes to transverse teak sleepers spaced 2 ft. 6 in. apart from centre to centre.

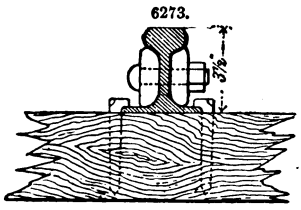

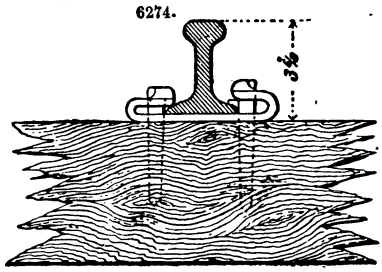

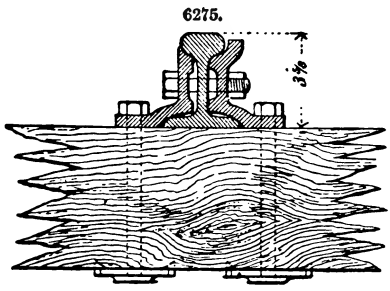

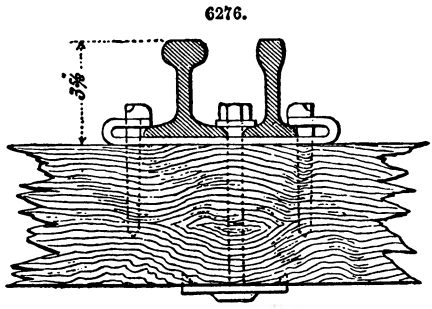

The Queensland railways are good examples of modern light railways. They have a gauge of 3 ft. 6 in., and the permanent way adopted is shown in Figs. 6274 to 6276. Fig. 6274 shows the section at the joint; Fig. 6275, the chair for curves of the ordinary radii, and the mode of fastening; and Fig. 6276, the chair and guard rail adopted for curves of the small radius of 5 chains. The road consists of flat-bottomed rails, weighing 40 lbs. to the yard, of a general length of 20 ft. The rails are laid vertically, fished with Adams' bracket-plates, and secured at the joints by fang-bolts, and elsewhere by dog-spikes to transverse rectangular sleepers, laid 2 ft. 6 in. apart from centre to centre. In India, and countries which are destitute at present of all railway accommodation, there is a large field for lines of a lighter description than those so common with us. While there is room for discussion, respecting the advisability of adopting light railways in countries which are already committed to a standard gauge, there cannot be the slightest doubt with respect to the benefits which will ensue from their introduction in our colonies and countries whose internal resources are hitherto undeveloped.

Griffin's Permanent Way.—The inventor of this system claims for it many advantages. He states that the Griffin rail, as represented in Figs. 6277, 6278, is designed to economize metal, and in proportion to its wearing surface, to afford such vertical strength as will ensure by the distribution of the strains upon it ever a large surface the least possible injury to its timber support. Neither vertical stiffness nor weight is sacrificed in this form of rail, which, with its deep solid head, without overhanging, and its thin girder web, is so firmly held in its enclosed position by its fastening, that any tendency to turn or buckle is prevented. Not considering the additional

strength given to the rail by its deep web, the head alone is wider and stronger than that of the Great Western Railway; because, whilst the great weights passing over the latter tend to open it, and press the fastenings out of place, the former is solid, and without that tendency.

6277. 6278.

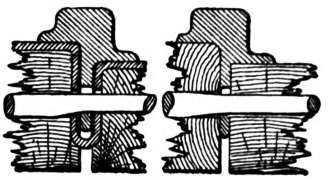

6279.

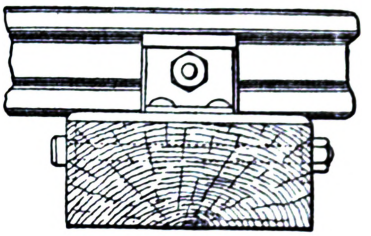

6280.

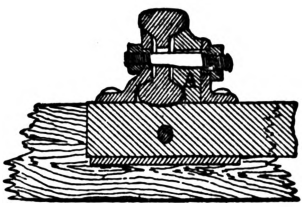

6281.

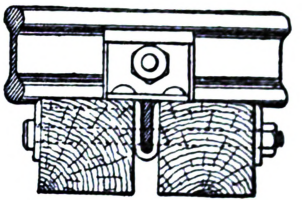

6281A.

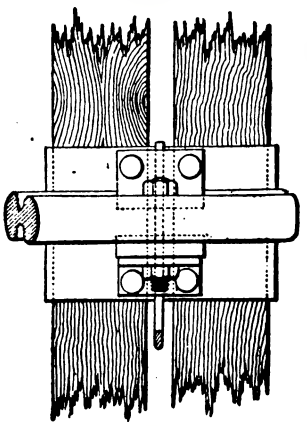

Plan.

6282.

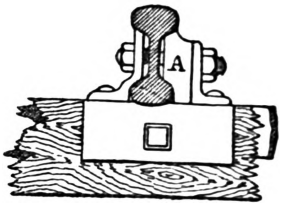

6283.

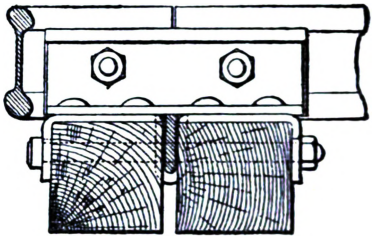

With the ordinary double-headed or Vignoles' rail, Griffin takes two pieces of timber 2 or 3 ft. long, from 5 to 12 in. wide, and from 5 to 6 in. thick, or plates of wrought iron, called clips, stamped into the forms shown in Figs. 6279 to 6283, which have jaws riveted to receive the rail, and they embrace one or two pieces of timber. Through the channel in the centre of clips, Figs. 6281, 6283, and exactly to fit it, a strong wrought-iron tie-bar is passed. The timber, clip, and tie-bar are immovably fixed by a bolt, which at the same time gives the exact gauge of the line.

The rail is tightened down upon the bed, which is stamped upon the clips, as in Figs. 6284 to 6286, by an eccentric bolt. By lengthening the jaws to the full length, Fig. 6283, and using two instead of one bolt, a thorough joint is secured.

This method is shown in plan in Fig. 6287. It will be seen that the height of the rail from the base of the sleeper is here reduced by 3 in., decreasing the strain and leverage.

The weight of rail used compared with the ordinary system can be reduced considerably, as it has more direct support, and the short bearings and comparatively elastic bed prevent cutting and distress to the fibre of the iron.

The sleepers are independent of climatic influence, more direct bearing is obtained; and so long as it is strong, timber of almost any quality, shape, or size, may be used, as in Figs. 6288, 6289. By withdrawing a bolt any sleeper can be replaced in a few moments.

The clips, Figs. 6279 to 6283, are of a common description of rolled iron, and are easily made. They cover more surface than a chair, and oblige the sleepers to bed fairly under some of their loads.

The fastenings are of a strong and durable description, and have little strain to support, as this is sustained by the sleeper.

The filling-pieces may be of compressed wood or of iron, Figs. 6284 to 6286, and are made to fit without driving. The wrought-iron jaws, when screwed together, by the eccentric bolts passing

through the jaws, rail, and filling-pieces, hold all together as a solid, and give the amount of compression required.

6286.

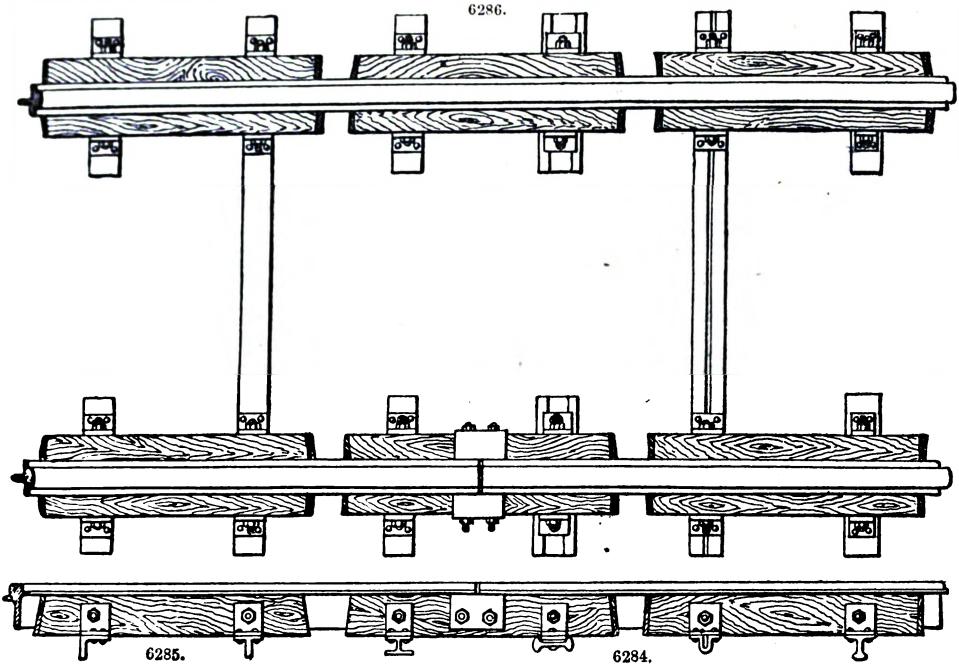

6287.

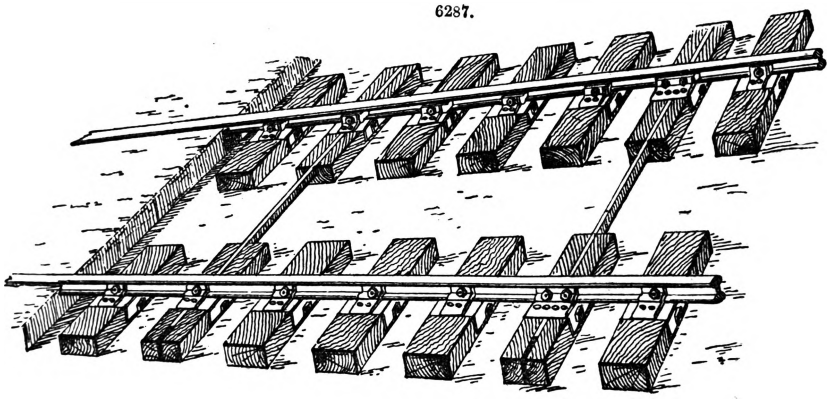

6288.

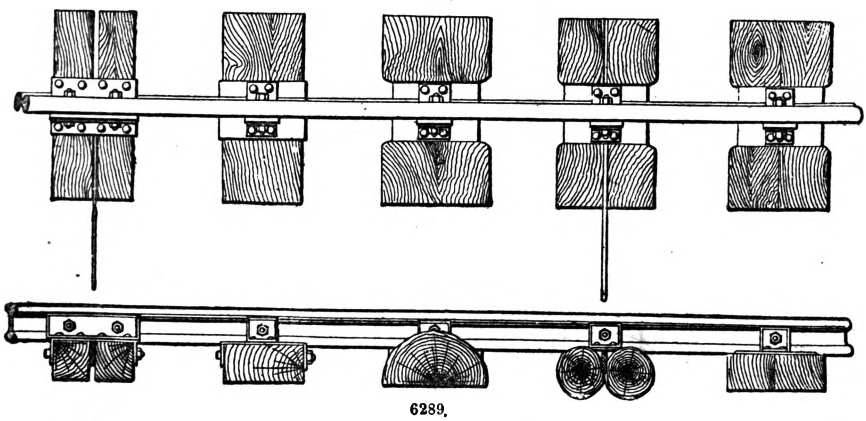

6289.

The gauge is always kept true by the tie-bar, more especially at the joints, which are as strong as any other portion of the road. The full-sized clips average but 16 lbs., and fish-plates are dispensed with altogether.

The sleepers are a combination of the longitudinal and transverse systems, and whilst the advantages of a longitudinal sleeper are secured, those in the transverse system are also preserved.

A class of timber may be used, which is now useless, for permanent way purposes, and oak, or other hard woods, suitable for making the best and most durable roads, can be bought of such small sizes as are necessary.

Sawing and boring the timber is all the work necessary to convert it into a sleeper; and the sizes required are so small as to allow of it being readily procurable in many situations where ordinary sleepers cannot be obtained.

The fastenings are either eccentric or concentric bolts, Figs. 6277, 6278, the screwing forward of which tighten the rails upon the sleepers. They are comparatively very large in size, of one uniform kind, and though they can be removed in a few minutes, firmly secure the rails and sleepers together.

The nut of each fastening, Figs. 6290, 6291, locks itself, and cannot work loose. This is effected by having the collars upon the nuts, which pass through the jaws, flattened very slightly on two opposite sides, and the hole through the angle-iron, or jaws, punched with a corresponding flatness at the top. When the rail is tightened down upon the sleeper, and has a strong tendency to rise, half a turn of the nut brings the two flattened surfaces together.

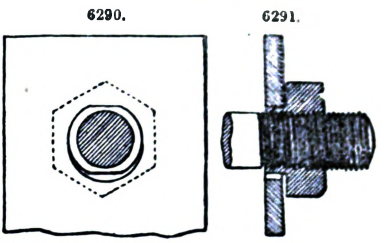

The tie, or gauge-bars, are of any desired section of T girder, angle, or channel iron, or old worn-out rails, adapted as in the plan on side view, Figs. 6284 to 6286. Any desired strength can be given, and they form a part of the permanent foundation, which is all designed so that they can be placed as near or as far apart as found necessary. The same jaws and bolts being used upon them as upon other parts of the foundation, not only admit of this, but at the same time make them available for holding down, tightening the rail upon the sleeper, and adjusting the exact gauge of the line.

Some sections are better adapted for this purpose than others, but as a general principle the heavier sections are the most durable.

Any section of T iron is applicable for foundation and timber support; but T iron being twice the cost of worn-out rails, a more substantial line can be made with the latter, for the same cost as shown in Fig. 6284 to 6286.

There is evidently no saving in simplicity in this road, as the component parts are very numerous; and it is questionable whether the saving in the length of the sleepers will prove of the importance anticipated.

Concluding Remarks.—The question will naturally present itself, what is the limit at which the increase of weight in the locomotive and general traffic, and consequently the corresponding increase in the weight of rails, and details of the permanent way, will stop? It is clear that it must stop somewhere. The probability is that the maximum weight of the rails will never much exceed 85 lbs., even should the weight of the engines be still further augmented. The result of any further increase in this particular would be, not to put more weight upon any one or any pair of wheels, but to distribute it more uniformly, so that it would not tell so severely upon the road. It is the terrific pounding of driving wheels of large diameter, running at very high speeds, which is so destructive to the rails and permanent way generally. The manner in which the weight is distributed makes the real distinction between a heavy and a comparatively light traffic, and not the actual amount of the weight itself. This is one reason which causes the permanent way on the Continent to be of a lighter description than in this country. It is not that the loads are not so heavy as ours, but the weight is more uniformly distributed, and, in addition, they are not conveyed at so high a speed, which is an equally, if not more important consideration. Looking at the question in all its bearings, and judging from the past, we are strongly of opinion that the future permanent way in this country will, with some few exceptions, consist of the transverse-sleeper road, with sleepers laid as closely together as the spaces necessary for packing will allow. These will carry a double-headed steel rail weighing not less than 82 lbs. to the yard, fixed in cast-iron chairs, with compressed wooden keys, and fish-jointed. It will be time enough to turn attention to a road altogether of iron, when it is no longer possible to obtain timber for the sleepers, if that day should ever arrive.

Books on Permanent Way;—Wood (N.), 'Practical Treatise on Railroads,' 8vo, 1838. Borden (S.), 'Useful Formulæ for Railroads,' 8vo, 1851. Dempsey (G. D.), 'Practical Railway Engineer,' 4to, 1856. 'Railway Practice,' by S. C. Brees, 4 vols. 4to, 1859. Cotton (C. P.), 'Railway Engineering in Ireland,' crown 8vo, 1861. Haskoll (W. D.), 'Railway Construction,' 4 vols. royal 8vo, 1864. Holley (A. L.), 'American and European Railway Practice,' folio, 1861. Perdonnet et Polonceau, 'Portefeuille de l'Ingénieur des Chemins de Fer,' 6 vols. 8vo, and 2 vols. 4to, 1861–1866. Goschler (C.), 'Traité pratique de l'Entretien et de l'Exploitation des Chemins de Fer,' 4 vols. 8vo, 1868–1872. Von Waldegg (E. H.), 'Handbuch für specielle Eisenbahn-Technilk.' 5 vols. royal 8vo, Leipzig, 1869–1872. Vose (G. L.), 'Railway Engineering,' 8vo and folio, New York, 1873. See also numerous papers in the 'Minutes of the Institution of Civil Engineers,' and the 'Annales des Ponts et Chaussées.'

PERSIAN WHEEL. Fr., *Roue persanne;* Ger., *Schöpfrad;* Ital., *Ruota persiana;* Span., *Noria.*

See Mechanical Movements, Fig. 5791.

PET COCK. Fr., *Robinet de cylindre;* Ger., *Wasserablasshahn;* Ital., *Chiavetta di prora;* Span., *Llave de comprobacion.*

A pet cock is a cock placed in the delivery-pipe of a pump to show if it is working.

PICK. Fr., *Pic*; Ger., *Keilhaue*; Ital., *Piccone*; Span., *Pico*.

A pick is an iron tool into which is inserted a wood handle; it is used for loosening and breaking-up hard earth, ground, stones, and so on.

See Hand-Tools.

PICKER. Fr., *Epinceur*; Ger., *Nopper*; Ital., *Diavolo*; Span., *Escardador*.

Any machine for picking fibrous materials to pieces is termed, in mechanics, a picker, as a wool-picker, a rag-picker.

PIERS. Fr., *Jetée, Môle*; Ger., *Hafendamm, Hoft*; Ital., *Calata, Molo*; Span., *Muelles*.

Piers are masses of stonework or moles projecting into the sea, for breaking the force of the waves and making a safe harbour. Also, any projecting wharf or landing-place is termed a pier. Architecturally, piers are masses of solid stonework for supporting an arch, or the timbers of a bridge or other building.

See Construction. Docks. Harbours. Piles. Retaining Walls.

PILE-DRIVER. Fr., *Sonnette*; Ger., *Ramme, Ramm-maschine*; Ital., *Bertacapra*; Span., *Machina*.

Piles and Pile-driving.—The nature of the ground, the thickness of the various layers or small strata, and the depth of the firm ground ultimately arrived at, are the points to which attention should principally be directed in getting in pile foundations. There are two methods of piling generally used. The one, and the more ancient, consists in simply forcing down timber piles by repeated blows of an iron block called a monkey; the other, which is but of recent origin, consists in screwing iron piles into the earth by imparting a rotary motion to them by means of levers, which may be arranged in a variety of ways. Both of these methods are valuable and reliable under certain circumstances, but there are objections to their universal employment which we shall examine.

The object to be attained, in driving down a series or row of piles, upon which to erect a pier or abutment, is to replace a naturally loose, movable foundation by an artificial one, based upon a firm support, and upon which the superstructure will rest. It is therefore of the greatest importance that this artificial foundation should be immovably fixed, and that every individual member of it—that is, every separate pile—should penetrate into the solid ground. This last condition, which is the most essential, is one that is frequently not fulfilled. In driving a pile, for example, through soft muddy earth, it goes down at first with considerable velocity, the effect of each blow being distinctly visible. After a short time the rapidity of descent diminishes more and more, until apparently no effect follows the succeeding blows, and at last the pile refuses to go down any farther. At this point it is commonly supposed that the pile is driven far enough, and that solid ground is reached. Often this assumption is false, and serious results have happened from an ignorance of the error. Although the further descent of the pile may be arrested, it does not necessarily follow that a solid foundation is reached; for when a pile is of great length, the lateral pressure of the surrounding strata in the vicinity of the point is very great. This pressure grips the point and sides of the pile like a vice, and by imparting an apparent immovability to it, produces the same effect as if it had really reached an impenetrable stratum. From Fig. 6292 it is clear the pile might be wedged up and retained immovable, although there was nothing beneath it, the surrounding lateral pressure having once reached a certain amount being sufficient to keep it fixed. The same cause gives rise to the vibrations, which all have observed in piles when superintending their driving; for the earth becoming more and more compressed, at last exerts its elastic force, and after yielding temporarily to the force of the blow recovers itself, and by its pressure against the pile imparts a vibratory and tremulous motion to it.

6292.

Sufficient attention has never been bestowed upon one feature belonging to founding on piles which have been got down by driving, which relates to the different manner in which the weight is brought upon the piles firstly and lastly. The weight which drives them down is sudden, rapid, violent, and concussive; that which they have permanently to withstand is gradual, slow, gently applied, and uniformly distributed. Now, it is a well-recognized mechanical fact that a weight applied continuously and unremittingly, will ultimately produce an effect which ten times the weight applied in the manner described will fail to accomplish. Let us apply this principle to the pile in the above situation. After the superstructure has been finished, which, so far as mere weight is concerned, may be twenty times that of the monkey employed in driving the pile, the continuous nature of its action begins to make itself felt; the lateral pressure commences to yield little by little, and the piles, together with their superincumbent load, sink slowly but appreciably. These remarks apply with still greater force to a number of piles driven close to one another; as, in consequence of the earth becoming more dense and compact as every succeeding pile is got down, it opposes a much greater resistance to penetration, and there is never the same depth attained with the last piles as with those first driven.

6293.

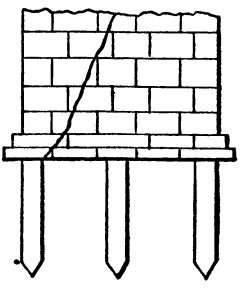

The danger attending an irregularity in the depth to which a row of piles is driven, is that when a settlement takes place. It is also irregular, and is sure to occasion unsightly cracks in the masonry, if it does nothing worse. Fig. 6293 represents a portion of a pier founded upon piles, the left-hand corner one of which has sunk, and the result is the crack shown, which continues up throughout the entire height of the pier. If this crack is of such a size as to endanger the safety of the pier, the only remedy is to pull it down; but if it is very slight, what is technically termed

a thread, fresh pointing will obliterate the mere appearance of it upon the face of the work. It is not a settlement, provided it is not an absolute sinking, that necessarily exposes a structure to danger of falling, but the irregularity of the settlement that works the evil. In an arch bridge, for example, if both abutments were to sink perfectly uniformly and regularly, the result would be simply a lowering of the whole bridge; but if one were to settle and not the other, the arch would be in danger of breaking. It is partly for this reason, combined, however, with other considerations equally important, that where the foundations of a proposed bridge are known to be bad, it is usually designed, in railway work at least, as a girder and not an arch, since the partial settlement of one abutment would produce no other effect upon the stability of the bridge than the lowering of one end of the girders, a circumstance of little consequence within certain limits. It will probably be remarked that the depth at which a real solid stratum is to be obtained, might easily be ascertained by boring, previously to commencing the pile-driving. To a certain extent this remark is correct; but not unfrequently the borings which would reveal the true nature of the ground, are either altogether omitted, or conducted in a manner so careless and slovenly, that the results elicited from them are little better than worthless for all practical purposes. On the other hand, it must be admitted that it is very difficult to estimate what the exact character of the ground may be, with respect to its solidity or bearing power, from even the most accurate and most carefully-conducted borings, and it must, moreover, never be forgotten that all borings are peculiarly local, and that ground which appears hard and consolidated at one spot, might, and does, present a totally opposite character at a distance of only a few feet. A convincing proof of the error of assuming that a solid foundation was obtained at a certain depth, was afforded by the total failure of several bridges and viaducts on the Ligne du Midi, in France. These structures were founded upon piles in a soft substratum, driven down to a depth of 40 ft., where it was confidently believed a hard bottom was arrived at. After the failure took place borings were made, and it was discovered that solid ground was not reached until a depth of nearly 80 ft. had been sounded, thus fully demonstrating the reason of the sinking of the various works along the line. To penetrate to any depth by driving into pure sand is a simple impossibility; one might as well attempt to drive a pile into rock. In fine gravel the obstacles are very nearly similar in character and amount; and, as a rule, the difficulty of penetrating gravel by direct impact, may be said to vary inversely as the size of the particles. When the principle of impact fails, we can, under certain considerations, have recourse to that of rotation, and the system of founding upon screw piles has met with much success, notably so in getting in foundations under water.

Timber Piles.—The timber most employed for piles in this country is elm, fir, and beech. In cases where hard driving is necessary elm is to be preferred, as it is not nearly so liable to split in being driven as beech or fir. Those who have had experience in pile-driving are well aware of the cost and trouble incurred in drawing piles that have been split in driving. When timber is exposed to the alternations of wet and dry weather it does not last for any great length of time, but if kept constantly under water, and not exposed to the attack of the *Teredo navalis*, or pile-worm, it will remain sound for a very considerable period. Beech and elm are much better when used in a green state if required to be placed under water permanently. Some of the fir guide-piles, and portions of the caissons of the Westminster old bridge were as sound when drawn out as when placed there, about 120 years before. In the selection of timber for piles, care should be taken to procure them as straight and as free from knots as possible, as they are then much less liable to split, and better for driving in all respects. It is also preferable to use whole timbers than portions of large balks. When the scantling of the timber is too large, it is better to cut the piles out of the heart of the wood, as they are then less likely to split in driving.

Bearing and Sheet Piles.—Bearing piles are those which are used either for directly supporting a superincumbent pressure, or as an assistance to sheet piles when the object is to retain or hold up a mass of earth or other material. They should always be whole timbers, not less than 12 in. square, and are usually shod with a cast or wrought iron shoe. They should be in one length where possible. Timber is not so readily procurable in long balks as formerly. Sheeting piles are generally half balks, and are driven close together so as to constitute a continuous timber wall. They derive their resistance partly from the ground into which they penetrate, and partly from the main piles to which they are connected by the waling-pieces. These latter are pieces of timber, usually whole balks, bolted or spiked to the main or gauge piles, and between them the sheet piles are driven. A good example of sheet piling is when they form the sides of a caisson. Briefly, the distinction between main or bearing and sheet piles is that the former are subject to vertical pressure, and the latter are not. Sheet piles are sometimes whole timbers where the retaining power is required to be very great.

When the object is simply to consolidate the ground, what are termed sheet piles are driven in considerable numbers and very close together. This plan is, however, seldom adopted now by engineers, who prefer to use concrete. Fender piles are employed, as their name signifies, to protect the face of any permanent structure from injury by blows or concussions. They are of whole timbers, and are driven along the face of river walls and embankments at intervals of about 10 ft. They need not go farther into the ground than what is sufficient to give them a good hold. Sometimes they are not driven, but a hole is excavated for them, and the earth subsequently well rammed in round them. If the face of the wall is battered or curved, the inside of the pile must be trimmed to make a good and close fit. A cluster of fender piles braced and strutted together constitutes a *dolphin*, which is triangular in shape, and is always placed in front of any temporary work in progress in a navigable river.

Excavating for Piles.—In order to facilitate the driving of piles, the ground is frequently excavated to some depth, and also dredged out as well along the line of pitching. At the construction of the dam for the Thames Embankment on the north shore, with the view of saving time, the ground was not dredged before the piles were driven, and the driving was in consequence a slow and difficult operation. In many cases it was all but impossible to force the piles down, and about

one-sixth of the whole number pitched, having, in the process of driving, appeared to have failed, were drawn, and other piles were substituted. Whenever a pile was observed to show symptoms of failure in driving, it was drawn; and in this dam ninety-five piles were so removed and replaced. Generally, the piles when drawn were found to have cast their shoes, and their points were bruised into a mass of tangled shreds. The failure usually occurred whilst the point of the pile was passing through a bed of close, compact sand, containing fragments of shells, which rested on coarse open gravel. Beneath the gravel, and resting on the clay, was a layer of septaria, which presented a serious obstruction to the passage of the piles. Once through this stratum and into the clay, the driving became comparatively easy.

Notwithstanding the precautions which were taken to draw and replace injured piles, it was afterwards ascertained, when the foundations were excavated inside this dam, that about one-fourth of the piles which remained were bruised and broken, and had not penetrated the clay. The piles were of whole timbers, in lengths of from 40 ft. to 48 ft., and from 12 in. to 14 in. square. They were shod with cast-iron shoes, weighing 70 lbs. each, and were driven, or were intended to be driven, 4 ft. into the clay. Cast-iron shoes were used in preference to those of wrought iron, as giving, at an equal cost, a much larger base for the timber. Where the driving was very difficult, shoes having cast-iron bases and wrought-iron straps were employed.

Heading and Shoeing Piles.—To ensure the quick and proper driving of a pile, great attention ought to be paid to heading and shoeing, which is a very important point. If the shoe gets twisted the pile cannot be driven accurately, and should it come off, the withdrawal of the pile frequently becomes necessary. The best scrap iron should be used for the hoops with which the piles are headed, and also for the shoes. The weight of the hoops used for the bearing piles of London Bridge was 30 lbs., and that of the shoes 35 lbs. These piles were, on an average, not less than 20 ft. long, and 12 in. diameter in the middle. One of the best kinds of shoe was that used for the bearing piles at Westminster new bridge. It was a combination of wrought and cast iron, the point being cast and fixed on with wrought-iron straps. The weight of the hoop used was 38 lbs., that of the shoe 60 lbs., including rivets, jagged spikes, and straps. The cast-iron point by itself weighed 28 lbs. The piles averaged upwards of 30 ft. in length, and 14 in. × 14 in. scantling.

In Figs. 6294 to 6299 are shown the shoes used for the piles in the dam already mentioned.

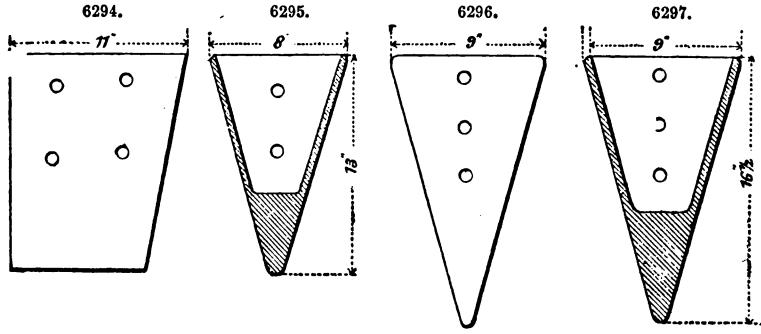

Those for the sheeting piles are wholly of cast iron, and all represented in elevation and section in Figs. 6294, 6295. Those for the gauge-piles are similarly shown in Figs. 6296, 6297, and are also wholly of cast iron. The shoes shown in elevation and section in Figs. 6298, 6299, are partly of cast and partly of wrought iron. The bosses are of cast iron and the straps of wrought iron. In certain soils cast-iron shoes will answer extremely well; but in others, those of wrought iron must be employed In fact, if there is any great difficulty to be encountered in driving, it is preferable to adopt wrought-iron shoes. At the building of the suspension bridge at Pesth, the shoes of the piles which were drawn were found to be all displaced. They were afterwards riveted on to the piles. The gravel was so hard and compact as to shake the piles. To prevent them splitting screw-glands were used.

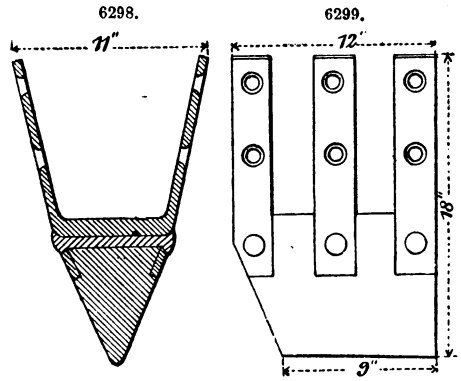

Timber Piles with Cast-iron Screw-points.—Several descriptions of cast-iron screw-points have been manufactured by Ransomes and May, of Ipswich. They are shown in Figs. 6300 to 6302. Fig. 6300 shows the largest size adapted for whole timber piles, which are often splintered and shattered, and even set on fire by the rapid blows of the steam pile-driver, when traversing compact ground, and when wrought-iron shoes are sometimes crushed into the timber, even in ordinary ground, with the force of the common pile-engine. The small screw-point opens the way for the conical part, and the larger screw not only draws the pile down, but when it has penetrated to a sufficient depth, affords an extended base. Fig. 6301 shows the shape adopted for railway signal posts, and Fig. 6302 that for telegraph posts. The advantages claimed for these screw-points are that they save several feet of timber, and that the general length of the pile can be reduced, as it will bear a greater weight, and offer a more solid base when introduced to a less distance than when at rest upon the ordinary sharp wrought-iron pointed shoes.

Rams or Monkeys.—In all cases, whether manual or steam labour is employed, the pile is driven by a blow which is given by a ram or monkey. This consists of a block of iron or wood, but more generally of the former material. Before describing it further, it will be well to inquire into the theory of its action. Writers on mechanics have not been able to agree on the precise manner in which the force of the blow given by the ram of a pile-engine should be estimated, and the question appears to have been greatly confused by confounding it with the effect produced in sinking the pile. It is well known that the sinking of the pile is by no means regular or proportioned to the friction opposing its descent as determined by theory. On the contrary, in defiance of all theory, a pile will sometimes sink more at the fourth or fifth blow than at the first or second, or perhaps more at the last blow than it did ten or fifteen blows before; and yet it is obvious that if we were attempting to investigate theoretically the resistance of friction, we must estimate this resistance to increase in some regular proportion to the depth to which the pile is driven in the ground.

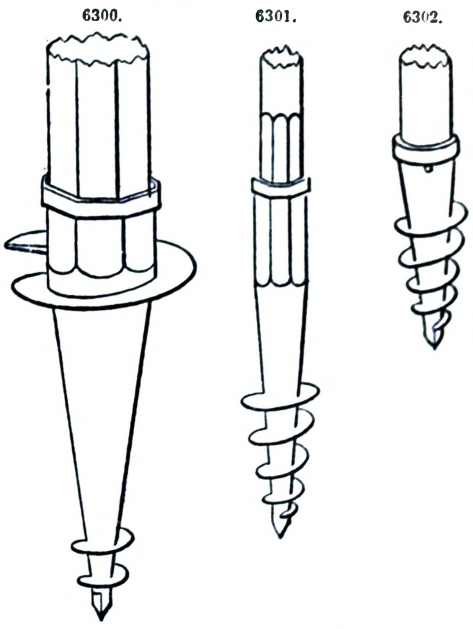

Practice, however, shows that occasionally the resistance is less than at a previous blow, when theory would point out that it is more. We therefore reject from our consideration every attempt to determine the actual effect produced by the force which we are able to exert on the pile. In fact, whether the blow produces any effect or not, the force exerted is still the same, and this is all that theory can determine, because the sinking of the pile depends on conditions of tenacity and consolidation of the ground to be driven into, which are too various and complicated ever to be capable of general expression.

Apart, then, from all consideration of the effect produced in sinking the pile, let us simply inquire the actual force with which the ram, in falling from a given height, strikes the head of the pile. Obeying the empirical law of accelerated velocity, the ram will fall through any space S in the time $\sqrt{\frac{S}{g}}$, where $g = 16\frac{1}{12}$ ft., the space through which a heavy body falls in one second of time. It is a fixed and well-established rule in mechanics, that the velocity acquired by falling through any given height is directly proportionate to the time of descent, and that the velocity acquired at the end of the first second of time is equal to $32\frac{1}{6}$ ft. a second; hence it follows that the velocity acquired by a body in falling through the space S is equal to $32\frac{1}{6}\sqrt{\frac{S}{g}}$. Then to find the force of the blow, the weight of the body is to be multiplied into this acquired velocity, which is not the velocity with which the body has fallen, but the velocity in feet a second with which it would fall during the next instant of time, were it not suddenly stopped by striking the pile. According to this formula, the following Table has been calculated, showing in one column the time of descent in seconds of any ram falling from 1 to 40 ft., and in the other, the force in tons with which a ram weighing 1 ton will strike, in falling from the same height. The force of the blow given by a ram of any other weight than a ton may be ascertained by this Table, by simply multiplying the number in the column headed Force in Tons, by the weight of the ram. Thus, if it is required to determine the force of a blow given by a ram of 16 cwt. falling from a height of 30 ft., opposite 30 we find the tabular number 43·9, hence 16 × 43·9 = 702 cwt. = 35 tons 2 cwt., the force required.

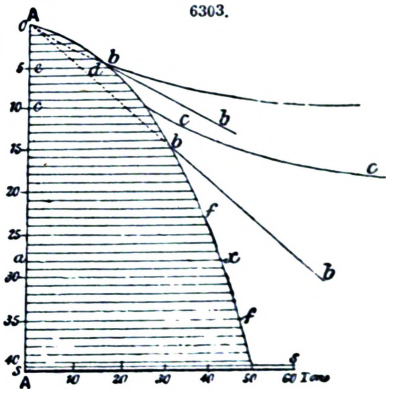

The diagram, Fig. 6303, is intended to represent, by means of the curved line *f f* the law according to which the force of the blow increases with the height from which it falls. For example, the distance *a x*, measured on the horizontal scale, will be 42·4 tons, the force with which a ram weighing 1 ton strikes when it has fallen from a height of 28 ft. The peculiar curve here shown is the result of that law by which the forces vary as the square roots of the heights from which the ram falls. If the forces varied directly as the heights, the straight lines *b b* would express the law of their increase; and if they varied as the square of the heights—a supposition which, erroneous as it is, has been entertained by some persons—the law of the forces would be expressed by a curve of an entirely different nature from the true one, namely, by the curves *c c*, according to which, if *e d* were the force for a height of 5 ft., *e e* would be the force for a height of 10 ft. The straight lines and the curves *c c* are, of course, both erroneous, the true scale for measuring the forces being afforded by the curved line *f f*, so that the distance *a x* of any point *x* from the vertical line A A, measured

on the horizontal scale *s s*, will give the force of the blow correctly in the same manner as in Table I.

TABLE I.

Fall of Ram in feet.	Time of Descent in seconds.	Force in tons for a Ram weighing one ton.	Fall of Ram in feet.	Time of Descent in seconds.	Force in tons for a Ram weighing one ton.	Fall of Ram in feet.	Time of Descent in seconds.	Force in tons for a Ram weighing one ton.
1	0·25	8·0	15	0·96	31·0	28	1·32	42·4
2	0·35	11·3	16	1·00	32·1	29	1·34	43·2
3	0·43	13·9	17	1·03	33·1	30	1·37	43·9
4	0·50	16·0	18	1·05	34·0	31	1·39	44·6
5	0·56	17·6	19	1·09	35·0	32	1·41	45·4
6	0·61	19·6	20	1·11	35·9	33	1·43	46·1
7	0·66	21·2	21	1·14	36·7	34	1·45	46·8
8	0·70	22·7	22	1·17	37·6	35	1·48	47·4
9	0·75	24·1	23	1·20	38·5	36	1·50	48·1
10	0·79	25·3	24	1·22	39·3	37	1·52	48·8
11	0·83	26·6	25	1·25	40·1	38	1·54	49·4
12	0·86	27·8	26	1·27	40·9	39	1·56	50·1
13	0·90	28·9	27	1·29	41·7	40	1·58	50·7
14	0·93	30·0						

Opinions vary as to the best weight of ram for driving piles with. A heavy ram with a short fall is much to be preferred to a light one with a long fall, the latter being more likely to split the pile; the blow given by the former is more solid, and, having a shorter fall, the blows are given quicker. The only objection is that two more men are required in using a 1½-ton ram than when a ton ram is used; but this objection is more than counterbalanced by both the quality and quantity of work done with the heavier ram. Again, in regard to the height of fall to be used, a short one is preferable to a long one, for an equivalent effect is not obtained for the extra amount of labour expended when giving a long fall. Take, for instance, a ton ram with falls of 6 and 12 ft.; the former would give a blow of nearly 20 tons, the latter one of nearly 28 tons. Here, to get an equivalent, the blow given through 12 ft. should be double that of 6 ft., but the momentum of falling bodies of equal weights must be as the square roots of the heights fallen through; therefore an equivalent for the extra labour of raising the ram is not obtained. It is not advisable to use a ram of a greater weight than 1½ ton, as it then becomes unwieldy, and requires so much force to raise and shift it.

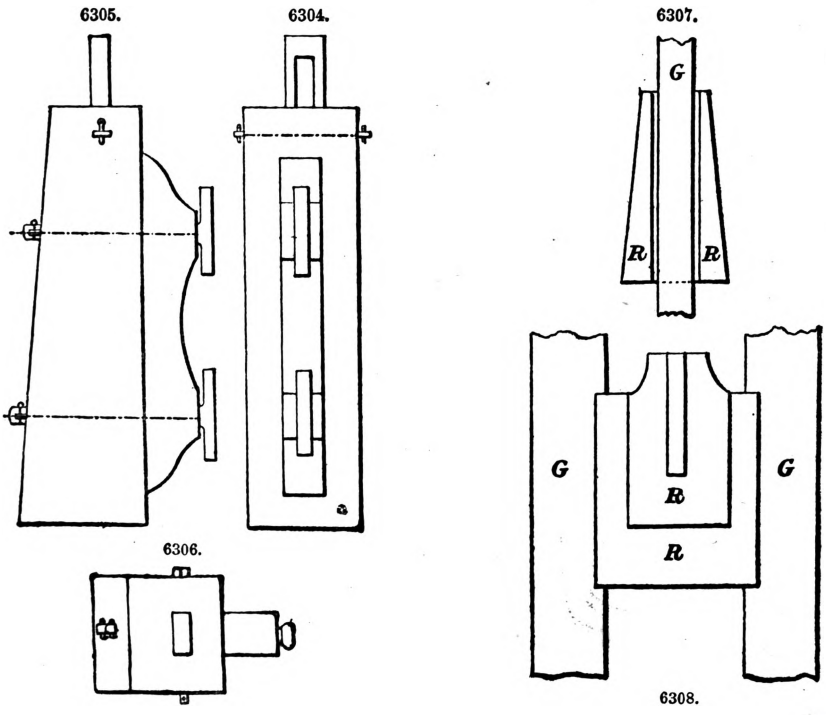

Rams, or monkeys, differ slightly in shape, in order to accommodate themselves to the guides of the engine in which they are driven. The ordinary shape is shown in Figs. 6304 to 6306, in front

elevation side elevation and plan. It is made straight on one side, that is, perpendicular to its base, and battered on the other face. The straight side slides against the guides of the engine, which it grips by means of the cheek-pieces attached to it. The weight of the ram represented in Figs. 6304 to 6306 is 22 cwt. In Figs. 6307, 6308, is shown another form of ram, in which two of the sides are battered. This ram R slides between a pair of guides G, G, of the engine, and has projections cast on the two straight or perpendicular sides, between which the guides pass. It is possible that the friction may be greater in this instance than in the other, although a steadier blow may be given. A ram seldom weighs less than 5 cwt.; but rams have been used weighing as much as 4 tons. Rams of oak, weighing about 30 cwt., were at one time very much employed, and do their work very well, without shaking or injuring the pile, as frequently occurs when iron rams are adopted.

The weight of the ram should be proportional to the sectional area of the pile to be driven. Piles having a diameter of 10 to 14 in. require to be driven with a ram weighing from 1000 to 1700 lbs. Sheet piles, with a breadth of 9 in. and a thickness of 3 or 4 in., require a ram weighing from 500 to 900 lbs. The weight of ram required for a pile of any given dimensions, with a certain fall, may be determined from the following equation;—Let F equal the height of the fall in feet, W the weight of the ram in lbs., B the breadth, and T the thickness of the pile in inches. Put L for the length of the pile in feet, and W_1 for its weight in lbs.; then for the value of W we have $W = W_1 \left(\frac{F \times W_1}{5\,B\,T\,L} - 1\right)$. If the pile is square, putting S for the length of one of the sides in inches, the formula becomes $W = W_1 \left(\frac{F \times W_1}{5\,S^2\,L} - 1\right)$. By the same formula, by simple inversion and reduction, the value of F, or the fall proper for a given weight of ram, can also be ascertained. Unless the value of L varies very considerably, it is scarcely worth while in practice to adopt a different weight of ram unless the job is an extensive one.

At the Brooklyn Graving Dock the rams were of cast iron, swelled out at the bottom to concentrate the weight at that point. They weighed generally about 2200 lbs., but others were used weighing only 1500 lbs. The fall was usually near 30 ft.; but some machines were tried with leaders, which gave a fall up to 57 ft. It was found by experiment that no advantage was gained by increasing the fall of the ram beyond 40 ft., as the friction on the ways then prevented any increased velocity to the ram when falling from a greater height. This result was obtained by tripping the ram at various heights, from 35 ft. upwards, until the maximum penetration of the same pile was ascertained. A few of the piles had to be driven with a follower or dolly, which was made of very tough oak, and well hooped at each end. The effect of the blows of the ram was about one-third as much as when directly striking the head of the pile.

The weight of rams varies considerably, and depends upon the circumstances attending each particular case. At the Montrose Harbour works, a ram of 12 cwt., with a maximum fall of 14 ft., gave six or seven blows a minute. It was found that a ram having a weight of 14 cwt. and a fall of 25 ft. shattered wooden piles, whereas one weighing 35 cwt., but with a fall of only 17 ft., did its work very well. At the construction of the Liverpool Docks, the weight of the ram was 13 cwt., and the fall 30 to 40 ft. The piles were of beech, and shod with wrought-iron shoes. This fall is very great, although the ram is comparatively a light one. When a light ram with a high fall is used, it will be found preferable to employ wrought-iron instead of cast-iron shoes. A heavy ram with a moderate fall always strikes a steadier and more even blow than when these conditions are reversed. It is well suited for driving cast-iron piles, notwithstanding that the precaution is always taken of using a dolly to save the heads of the piles. In calculating the weight of a ram by the formula already given for it, the nature of the ground, if of very exceptional character, must be taken into account. In very hard ground, the equation will hold true comparatively rather than absolutely, especially for large piles.

Driving Timber Piles.—In driving piles, the weight of the ram and its fall are not the only points to be considered. The rapidity with which the blows are given must also be taken into account. When piles are driven through sand or silt, the blows should be given very quickly, in order not to allow the ground to settle round them after each blow. The common ring-engine is often used for this reason in driving piles in the sand, but it is much better to use steam power. At the construction of the Pesth bridge, a couple of trial piles were driven through the bed of the river into the clay beneath. Both piles were of fir, but they differed as to hardness. The first pile was driven 20 ft. 6 in., and the second 22 ft. below zero, which gave 4 ft. into the substratum of clay. On leaving off driving, it took thirty blows with the monkey with a fall of 25 ft. to drive the first pile, and the hardest of the two, $\frac{3}{16}$ of an inch. The same number of blows with the same fall drove the second and softest pile barely $\frac{1}{8}$ of an inch. From twelve to sixteen blows were sufficient to upset the top of the first pile, so as to entirely destroy the effect of the blows until the damaged part was cut off and the pile rehooped. From five to six blows were sufficient to produce the same effect on the second pile. The outside of both piles was splintered and shaken a little, the first and harder the most. In driving the sheet piling for the same work, the ground was removed about 4 ft. in depth before a row of piles was pitched. They were then driven as far as they would go, which was about 3 or 4 ft., when the waling was fixed and strutted, and as much more of the gravel taken out as left the point of the piles 18 in. or 2 ft. in. A man was then employed with a kind of crowbar, with a spear-shaped head about 4 in. broad, to stir up and loosen the gravel opposite the pile which was being driven, and in this manner the whole bag was got down to within a foot or 18 in. of the clay, when more of the ground was taken out to allow of the lowest waling-piece being fixed and properly braced by the raking diagonal struts up to the tier above them. After this waling had been secured, the gravel was further loosened, and the pile driven until it had penetrated from 9 in. to 2 ft. 6 in., and in some cases 3 ft., in the clay

When the pile gets so deep in the ground that the head is below the level of the staging upon which the pile-engine rests, it is necessary to place on top of the pile a piece of timber hooped at each end. This is called a dolly or punch. A portion of the blow is probably absorbed by the dolly in its transmission to the pile.

Sheet piling in the form of caissons was employed extensively at the Pola Dock. A few round piles were first driven, by hand and steam pile-driving machines, from suitable floats, to which to secure the moorings. The sides were then staked out by driving 10 ft. apart, two and in some cases three rows of round piles. Straight, tapering round piles were chosen for this part of the work. The greater part of the sheet piling was of soft Italian, Styrian, and Austrian timber, 12 in. thick. Every piece was made quite straight upon the sides adjacent to or in contact with contiguous piles, and the piles were driven by ordinary pile-driving machines mounted upon travelling platforms provided with double-flanged wheels resting upon iron rails, which in turn were supported upon the tops of the longitudinal stringers. To the outer side of these longitudinal stringers the upper ends of the sheet piles were secured as fast as they were driven.

An ingenious apparatus for driving sheet piles accurately and evenly was designed by E. Towle, of New York, and used by him with great success at the construction of several important marine engineering works at the Austrian naval station of Pola, on the Adriatic. The depth of the water, the light specific gravity of the material, which was of soft Italian, Styrian, and Austrian timber, and the character of the bottom, rendered the process more than usually troublesome and difficult. The machine, for want of a better name, was called a spider, and several of them were made and used about the work. It is shown in Fig. 6309. Two sticks of tapering timber are formed by sawing a log 35 ft. long and 12 in. square, so that the larger ends are 8 in. by 12 in., and the smaller ends about 4 in. by 12 in. These are placed side by side horizontally, with the larger ends in the same direction, and placed 12 in. apart, and parallel to each other, to form the side pieces. At about 8 ft. from the thicker ends is fitted a block of solid oak, 30 in. thick, and about 6 ft. in length. A width of 9 in. on either side of the lower end of the block is cut away, to leave a thickness of 12 in. in the central part, which is made to project

6309.

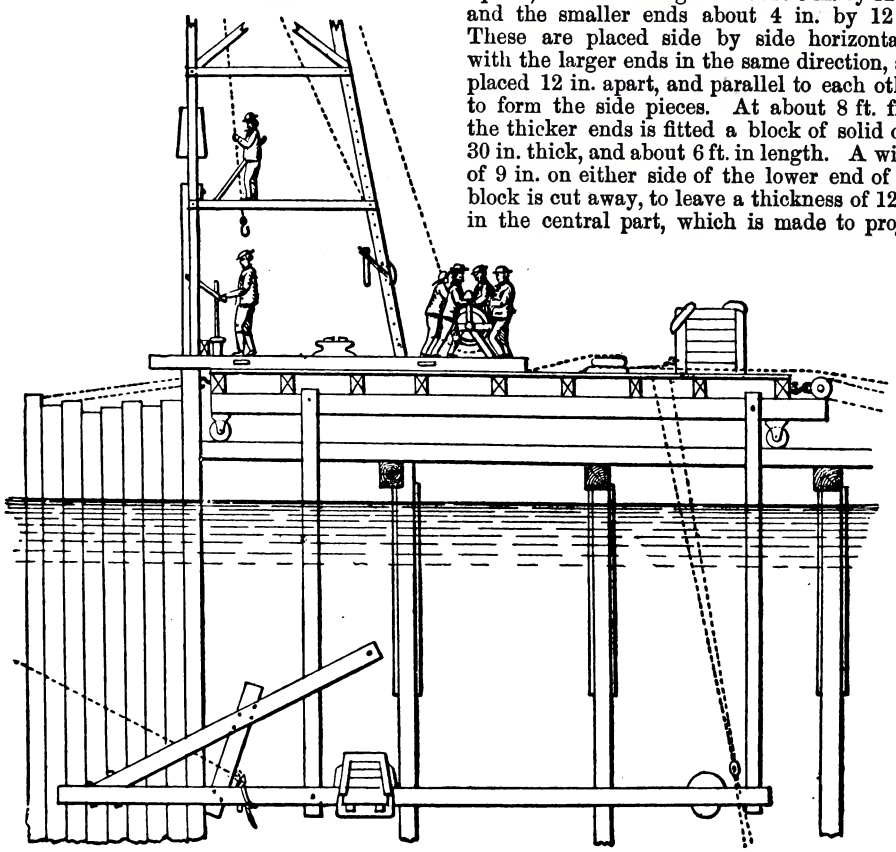

down between the parallel side pieces, and the three are securely bolted together. From its upper end, which is about 5 ft. above the side pieces, the oak piece slopes toward the thicker ends, at an angle with the vertical of 30°, and is formed into a sort of throat, to receive the ends of the piles.

Two inclined side pieces, or cheeks of timber, 8 in. by 12 in., and 17 ft. long, are secured, one on each side of the oak throat-piece, near the top, and running down, rest upon the top of the long tapering side timbers near their thicker ends, to which they are securely bolted, as well as through the throat-piece and through each other. The side cheeks and oak block now form a funnel to receive the point of a pile, and to guide it through the 12-in. opening below. Two vertical timbers called hangers, 8 in. by 12 in., and about 20 ft. in length, are inserted between the side pieces, in the rear of the oak block, and about 20 ft. apart. They are each hinged at their lower ends by stout iron bolts passing through both the side pieces and the vertical hangers. The side pieces at the rear are clamped firmly together, with a distance piece between them 12 in. thick. Two

ordinary tackle-blocks, for receiving lateral guys, are now attached to the smaller ends of the side pieces, one on either side, and the guy-ropes are rove through the blocks; a 9-in. hawser being made fast to the side pieces near the oak block. The apparatus is next weighted with ballast iron, laid across the side pieces, until it will sink promptly, and it is now ready for use.

Suppose a few sheet piles to be already driven, and the pile-driving machine to be in proper position to drive another pile in the line, the spider is then advanced so that the two side pieces or horns of the machine are made to pass, one on either side, and clasp the sheet piles already driven; the hawser is drawn taut until the oak throat-block presses hard against the pile last driven and the lateral side guys, properly secured, are drawn up by the men, on the platform, until the machine below is in proper line, which is readily known if the hangers are vertical. All being now adjusted, a sheet pile is now raised in the piling machine, and is readily driven in line with those already down. The throat of the spider guides the point and the body of the pile to its place, and the elasticity of the hawser permits a pile or two to pass through without slacking. In the result, the control of the work was so perfect that the sheeting required, at intervals of from 20 ft. to 30 ft., a special wedge-formed pile to be driven, butt down, to keep the work vertical at the driving point. With a spider at least double the quantity of sheet piles can be driven a day in deep water, when the mud is shallow, than is possible at the same expense without such a contrivance, and the work is much better done. Between the surfaces of contiguous sheet piles was a single thread of ordinary spun-yarn or marlin, which was tacked at each end of the piles before driving. This made the joints almost water-tight, as was proved by the fact that water was often found 2 ft. higher inside than outside the enclosed space.

The common plan of driving sheeting piles under water is to connect the main piles with longitudinal waling-pieces by means of divers, or the diving bell. When these, as well as the upper walings, are put on, there is no difficulty in driving them perfectly tight.

Drawing and Cutting-off Piles.—The operation of drawing piles is not so frequently practised as formerly. Engineers prefer leaving them in the ground and cutting them off. It is a troublesome and sometimes a dangerous operation, owing to the liability of the tackle to break under the great strain which it undergoes. A common method of drawing piles, when they are not driven very far into the ground, is by means of a lever. In tidal rivers and estuaries, it is usual to moor barges to the piles at low water, and as the tide rises they are drawn out. On large bridge works, travelling cranes and steam-engines are used for this purpose, which afford great power. As a proof of the severe strain upon the tackle, it may be mentioned that in drawing some of the piles of Westminster Bridge, chains of 1¼ in. were snapped asunder. The strain upon these could not have been less than 30 tons. It is a very advantageous plan to fasten a rope to the top of a pile, and let a gang of men haul away at it with a series of jerks. These will loosen the hold of the pile in the ground, and enable it to come away with greater facility. Piles which are drawn are frequently found to have lost or cast their shoes. It is a curious fact that a pile has been drawn and discovered to have lost 9 ft. off the lower extremity. Although the stump was split all to pieces, yet the pile went down uniformly at the rate of 1 in. for every three blows for the last 7 or 8 ft. that it was driven.

A simple and ingenious plan for cutting the heads of piles to any shape which might be required, was adopted some years ago in Holland. Not only were the heads required to be cut off, but a tenon was to be worked upon the pile as well. The apparatus consisted of a deal box, Figs. 6310 to 6312, well put together and made thoroughly water-tight by calking. The dimensions of the box were 6 ft. 6 in. long, 4 ft. 3 in. wide, and 3 ft. 3 in. deep. At the middle of the bottom there was a hole made large enough to admit the head of the pile A. Around this hole was nailed the open bottom of a sack B, made of stout canvas and strengthened with leather. Two cords C, C, were made fast at one end of each to the box, and the other ends were passed over pulleys in the sides. When it was required to cut off a pile, the box was put over it, and caused to descend as low as wanted by weights placed inside. Then, by the aid of the two cords, the lower end of the sack was drawn round the pile A, so as to form a completely water-tight joint. The water was emptied out of the box by a small hand-pump. A workman got in, turned back the canvas sack B, and after sawing through the pile, cut the head into any desired form.

6310.

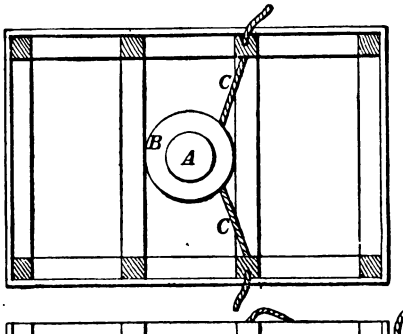

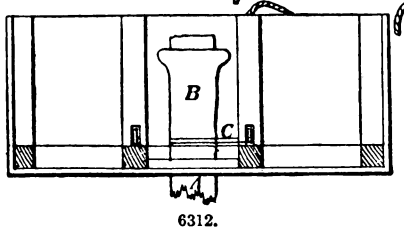

6312.

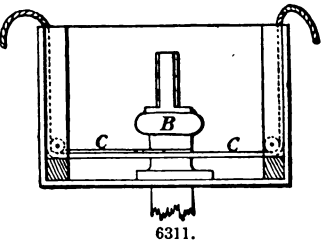

6311.

The piles forming the coffer-dams of the Thames Embankment were cut off by a pile-cutter designed for the purpose. The machine consisted of a platform upon a stout frame, resting upon four wheels, which travelled upon the rails before mentioned, and carrying a steam-engine with the requisite machinery for driving a circular saw, which was fixed at the lower end to an upright spindle, and adjusted to the proper level. The spindle was placed between the two rows of piles, and revolved in guides at the end of movable arms, so arranged that it would shift to either side of the dam by turning a handle and by the same motion it could be pressed towards the pile which

was being operated upon until it was severed by the saw. Two piles were usually cut off on each side before the machine required to be moved backwards on the rails. When the way was clear for the pile-cutter, and a sufficient length of dam dredged, sixty piles could be cut off in a day, but the excavators could not keep pace with the pile-cutter, and the average number of piles actually cut off did not exceed thirty-six daily. The machine was partly devised by Charles Murray, of London, but the motion which regulated the position of the spindle was entirely the invention of Murray. In using the circular saw for cutting off piles below water, at depths of 15 to 30 ft. below the surface, considerable difficulty has sometimes been experienced by the saw nipping. When this occurs the common saw can be employed, worked by hand labour from a diving bell, with ropes attached to the heads of the piles to draw them asunder as the cuts are made.

Cast-iron Piles.—In the Solway Viaduct, which is more than a mile in length, it was originally intended to use the screw pile, but on trial it was found that after getting through a depth of about 4 ft. of sand, there was so very hard a substratum of gravel mixed with stiff clay beneath, that the screws would not penetrate it, and the pile represented in Fig. 6313 was adopted. Over 1200 of these piles were driven. They were of cast iron, 12 in. diameter, and with the exception of some half hundred were driven from positions. One of these piles, 20 ft. in length, after being pitched into position, was generally driven down 18 or 19 ft. in thirty minutes, having received from twelve to fifteen blows a minute, from a monkey weighing 25 cwt., and with a fall of 5 ft. A timber dolly was used between the pile and the ram, with a copper ring between the shoe of the dolly and the pile-head. Six piles were generally got down in two tides. In Figs. 6314, 6315, are shown the iron piles and plates adopted in the construction of new Westminster Bridge. The piles A were 15 ft. long, and 15 in. in diameter, and were driven into the river bed by an ordinary pile-engine at intervals of 7 ft. In the spaces between the piles, cast-iron plates B were driven. The plates were 1¼ in. in thickness, and fitted the grooves in the piles exactly. The plates were stiffened by vertical ribs R, R, R, and by a horizontal rib at top.

6313.

6314.

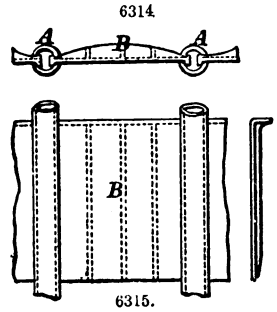

6315.

6316.

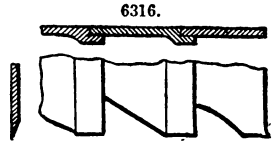

6317.

Leach has used cast-iron plates to advantage in the construction of a lock near Oxford. The piling was made of cast-iron plates 12 ft. long, 2 ft. wide, and 1⅛ in. thick, sharpened at the edge to ½ in. The plates, which are shown in Figs. 6316, 6317, fitted closely over one another. By these means the lock has its sides permanently lined with iron up to the water level. The guide-piles were of timber, and together with some iron ties to the shore, were sufficient to keep the iron piling in position while driving.

In the Dovey Viaduct a timber dolly was interposed between the monkey and the cast-iron splice, instead of the mass of lead which had been specified for, and which had been used with success in another case of an estuary crossing, in which the masonry piers were supported by bearing piles wholly of cast iron, and driven precisely as timber piles. The bearing piles were of cast iron, the cross-section of which measured 16 in. by 10 in., and consisted of a longitudinal web, extending 16 in., crossed by two transverse webs of 10 in. each; the cross-section, which was adopted from some similar works in the North of England, was a very advantageous one, as the disposition of the longitudinal and transverse webs caused it to drive particularly true, and afforded a large periphery of frictional bearing surface. These cast-iron piles were 42 ft. in length for the piers of the central opening, and 32 ft. for the other piers, the 42-ft. piles were driven 25 ft. into the bed of the channel, which was of London clay; and thence to their heads, which were driven down level with low-water mark, was 17 ft.; the heads of the piles were rectangles of 16 in. by 10 in., formed by flanges filling up the spaces between the longitudinal and transverse webs. These piles were designed to be driven 4 ft. apart from centre to centre, but were really driven somewhat closer. At low-water mark they were surmounted by two courses of Yorkshire flagstones, above which the piers were carried up in brick in cement. In driving the piles a mass of lead was interpolated between the monkey and the pile-head, and not a pile was broken in driving.

6318. 6319.

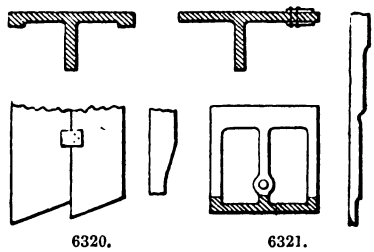

6320. 6321.

In the building of the Lowestoft Harbour there was erected a wall more than 1000 ft. in length, altogether of cast-iron piles, of the section shown in Figs. 6318 to 6321. Many experiments were made to obtain the best form of pile, and finally they were cast 30 ft. long, 18 in. wide, and of a thickness greater at the centre than the ends, a uniform thickness of 1½ in. being maintained at the edges by means of fillets. The rib was of fish-bellied form, 8 in. deep at the centre

and to counteract the tendency this form has to force the piles outward, the lower part of the rib was made in steps, as shown in Fig. 6321, and the cutting edge of the toe was one-sided. The piles were driven close together, edge to edge, clamps of wrought iron 5 in. × 4 in. × ¾ in. being riveted to the sides to act as guides. The heads of the piles were thickened out to 3 in., and were strengthened by ribs, as in Figs. 6318, 6319; the bolts were provided for tying the piles to a horizontal oak waling behind. The piles were driven into the bed of the sea to a depth of 10 or 12 ft. by an ordinary pile-engine, and it was found that by using a very heavy weight and a thin piece of elm on the pile-head to receive the blow, few of the castings were cracked or broken.

Duration of Iron Piles.—Objections have been made to the use of iron under water, in consequence of the oxidization which then takes place, not only in sea, but also in river water. The introduction of cast-iron piles and plates is of such comparatively recent date, that as yet there has not been sufficient time to prove their value in practice; but the experiments of Robert Mallett have quite overruled the objections just mentioned. Mallett experimented upon specimens of Scotch, Welsh, Staffordshire, and Irish cast irons. He immersed specimens of cast iron close to the mouth of the Great Kingstown main sewer, with a bottom of soft putrid mud. The result of this experiment showed that it would take 506 years to eat through an iron plate 1 in. thick acting on one surface, and 253 years if both surfaces were exposed. Cast iron was then immersed in the sea-water at Kingstown Harbour, and it was found by that experiment that it would take 530 years to eat through an inch thickness where one surface was exposed, and 265 years if both surfaces were acted upon. The next experiment was made in foul river-water, on a bottom of putrid mud, at the junction of the Poddle River. The result here was that it would take 1200 years to eat through an inch thickness of iron, and 600 years if both sides were exposed to the action of the water. Mallett also immersed the different irons in clear fresh river-water for 732 days. In this case he found that the mean corrosion to the square inch of surface exposed was 1·011 grain; and as the weight of a cubic inch of cast iron is 1841 grains, it would take 1820 years to eat through a plate of iron 1 in. thick if both surfaces were exposed to the action of such water. These experiments show that iron is sufficiently durable for the purpose; for even in the most disadvantageous locality, exposed to the effects of sea-water, combined with the contents of a main sewer, an iron plate 1 in. thick, with one surface exposed, as would be usually the case, would last for several centuries.

In the construction of the harbour of Lowestoft, to which allusion has already been made, iron piling was used as a substitute for timber, which would have been destroyed by the teredo. It was supposed by some engineers that the iron would become softened by the action of the water; but after the piles had been in position for forty years, the iron was found to have deteriorated but very little. The deterioration took place at the edges of the pile, at places where the runners had broken off, and where the original skin of the casting had been removed. It is a fact well known to engineers, that cast iron is far more liable to suffer from the action of the weather and sea-water when it has once lost its original back or skin. It is said also that its strength is impaired from the same cause.

Supporting Power of Piles.—There are three distinct purposes for which piles are used. First, to consolidate ground which is not firm enough to support in its natural state the intended superstructure; secondly, as a medium of support, or to transfer the weight down to a solid stratum, when the upper stratum is not solid enough to carry it; and, thirdly, when the support is chiefly derived from the adhesion of the material into which they are driven, and slightly from their sectional area.

At the graving dock at Brooklyn, New York, the centre piles are subjected to a pressure varying from 10 to 20 tons. Altogether there were seven thousand piles driven, in rows 2 ft. 6 in. apart, and at transverse distances of 3 ft. from centre to centre. The main piles were round spruce spars, very straight, from 25 to 45 ft. in length, having an average length of 32 ft. They were not less than 7 in. in diameter at the smaller end, and on an average 14 in. in diameter at the larger end. The heads of the piles were always protected in driving by bands of iron 3 in. × 1 in., and occasionally iron shoes were used. But these did not increase the penetration, as the resistance arose principally from the lateral friction, and the tenacity of the pointed wood was sufficient to displace the material at the bottom. During the progress of this portion of the work, a careful record was kept, which showed the distance moved by every blow on every pile used on the structure, and the weight and fall of the hammer at each blow. It was thus ascertained that the number of blows required to drive 6539 piles in the foundation an average depth of 32 ft. was ten and one-third to each foot of pile, and the distance moved uniformly diminished from the first to the last blow, ranging at 8 in. at the commencement to no movement at the end, and the average distance driven by the last five blows was 1 in.

As before remarked, the pile derives its support mainly from the frictional surface in contact with the earth, which is measured by the force of the blow, due to the weight and velocity of the ram. The ram does not fall in free space, but meets with considerable resistance from the friction with the ways. This resistance is also materially increased when the piles are driven on the cant, and the machine is not in a vertical position. In wet foundations the material obtains a degree of fluidity when disturbed by the operation of driving, which lessens the resistance to the penetration of the pile; but the greater density of the earth compared with that of the water causes it subsequently to settle in close contact with the sides of the pile, and if not afterwards disturbed, gives a greater coefficient of support than if the same pile had been driven through the same kind of material in a dry state. When piles of small lateral dimensions are used, the vibration caused by the blows enlarges the passage and loosens the earth round them. A good deal of the power is probably absorbed in this manner, although the penetration may be increased.

During the construction of the dock in question, experiments were made at different times to ascertain the weight which the piles driven in the manner described would sustain. For this purpose, one end of a lever of oak timber 60 ft. in length was firmly secured to a cluster of piles, with a short arm resting on the trial pile. The bearings were angular steel bars resting on plates of iron

with planed surfaces. The outer end of the lever was slowly weighted with successive weights, which towards the latter part of the trial were allowed to remain for several hours, and in a few cases a whole night. A number of coffer-dam and foundation piles were drawn by a similar process, and the power necessary to draw them also determined. Many of these trials were made on piles of nearly the same size, and driven in exactly the same manner, and the results were in all cases nearly alike. The weight required to move a pile driven 33 ft. into the earth to the point of ultimate resistance with a ram weighing 1 ton and falling 30 ft. at the last blow, was 125 tons. The piles experimented upon had an average diameter of 12 in. As these trials were continued until the final weights applied produced a visible movement of the pile, and as some allowance must be made for the friction and imperfection of the lever attachments, and from the support of the sectional area of the pile, it was considered that the extreme supporting power of the pile, due to its frictional surface, was 100 tons, or 1 ton a superficial foot of the area of its circumference. From an analysis of these experiments, the following general laws seem to have obtained;—First, that the effect of lengthening the fall of the ram was to increase the sustaining power of the pile in the ratio of the square root of the fall; second, that by adding to the weight of the ram, the sustaining power of the pile was increased by 0·7 to 0·9 of the amount due to the ratio of the augmented weight of the ram, and, third, that a pile driven by a ram weighing 1 ton and falling 30 ft. will sustain an extreme weight of 100 tons.

The following formula, based upon these data, is applicable to rams weighing from 1000 lbs. to 3000 lbs., and falling from 20 to 40 ft.;—Let W represent the weight of the experimental ram, and W_1 the weight of any other ram. Put F for the fall of the experimental ram, and F_1 for that of any other ram. Let S represent the extreme supporting power of a pile driven by the ram, having a weight equal to W, and a fall equal to F and S, the supporting power of a pile driven by a ram having a weight equal to W_1 and a fall equal to F_1. In the experiment, W = 1 ton, F = 30 ft., and S = 100 tons. W_1 and S_1 are in tons, and F_1 in feet. With the same weight of ram as in the experiment, and with any other fall, we have the proportion $\sqrt{F} : \sqrt{F_1} :: S : S_1$, from which $S_1 = \frac{\sqrt{F_1} \times S}{\sqrt{F}}$. Substituting in the equation the values for the several terms, it becomes $S_1 = \frac{\sqrt{F_1} \times 100}{5 \cdot 47}$, whence $S_1 = 18 \cdot 25 \sqrt{F_1}$. In the second case, let the fall remain constant, but the weight of the ram vary, and the value of S_1 will be given by the expression $S_1 = 0\ 8 \left(\frac{S \times W_1}{W} - S \right) + S$. This equation may be put in a simpler form, and we have $S_1 = \frac{S\ (0 \cdot 8\ W_1 + 0\ 2\ W)}{W} = S\ (0\ 8\ W_1 + 0\ 2)$, since W = 1. Finally, substituting for S its value of 100 tons, we have $S_1 = (80\ W_1 + 20)$. A combination of the two results gives $S_1 = 80\ (W_1 + 0 \cdot 228 \sqrt{F_1} - l)$.

M'Alpine states that under the most favourable circumstances the pile should not be loaded with more than one-third of the weight given by his formula; and where there is any danger of a future disturbance of the material around the pile, or where there is any vibration in the structure which may be communicated to the piles, the load imposed should not exceed one-tenth. The bearing support, due to the sectional area of the pile, has not been taken into account in these calculations, as it forms so small a portion of the support. From numerous experiments, the results obtained gave from 5 to 10 tons of pressure on the superficial foot of the pile.

There are several other formulæ for determining the pressure a pile will safely bear, but they must be received with caution, as practice proves that the nature of soils is so exceedingly variable as to almost set theoretical calculations in this respect at defiance. Molesworth gives one as follows;—"The pile will safely bear, without danger of further subsidence, as many times the weight of the ram as the distance which the pile is sunk the last blow is contained in the distance which the ram falls in making that blow divided by eight, provided the pile moves uniformly at several of the last blows." Mathematically this rule may be thus expressed;—Let S_1 equal as before the supporting power of the pile, and W_1 and F_1 the weight and fall of the ram. Put P for the penetration due to the last blow, and we have $S_1 = \frac{W_1 \times F_1}{8 \times P}$. A formula nearly agreeing with that given by Weisbach is $L = W \left(\frac{W}{W + W_1} \right) \times \frac{H}{D}$, in which W is the weight of the ram in tons, W_1 the weight of the pile in tons, H the height of the fall of the ram in feet, and D the depth which the last stroke drives the pile. The following is a comparison of the results obtained from M'Alpine's formula and others. In Weisbach's formula $S_1 = \left(\frac{W_1}{W \times \omega} \right)^2 \times \left(\frac{\omega\ F_1}{P} \right)$, in which the terms are the same, except that W is expressed in lbs., and ω represents the weight of the pile, and P the average penetration of the pile due to the last ten blows of the ram. By assumption $\omega = 560$ lbs., and P = 0·04 ft., although it was really nil in the dock experiment. From this we have $S_1 = 120$ tons, or if P is reduced to 0·01 ft., $S_1 = 480$ tons. By Molesworth's formula $S_1 = \frac{W_1 \times F_1}{8 \times P} = 90$ tons; or if P = 0·01, then $S_1 = 360$ tons. From M'Alpine's formula $S_1 = 80\ (W_1 + 0\ 228 \sqrt{F_1 - 1})$, we obtain $S_1 = 100$ tons, when P = 0. According to Weisbach's formula, the pile for safety should not be loaded with more than from one-hundredth to one-tenth of this result. Molesworth's formula gives the safe load. It appears that the supporting power which is derived from the frictional surface of large cast-iron piles, 6 ft. in diameter sunk from 20 to 30 ft. in rocky gravel, is about half a ton to every superficial foot of frictional surface.

The following formula, which is by Rankine, shows the relation which exists between the blow required to drive a pile to a given depth, and the greatest load that it will bear without sinking farther, supposing it to be supported by a uniformly distributed friction against its sides. Let W be the weight of the ram, H the height from which it falls, D the depth through which the pile is driven by the last blow, P the greatest load it will bear without sinking farther, S the sectional area of the pile, L its length, and E its modulus of elasticity. Then the energy of the blow is thus employed. $W \times H = \frac{P^2 \times L}{4 E S}$ is the portion employed in compressing the pile, and $P \times D$ employed in driving it. From which $P = \sqrt{\left(\frac{4 E S W H}{L} + \frac{4 E^2 S^2 D^2}{L^2}\right)} - \frac{2 E S D}{L}$. Piles are generally driven until P as computed by this formula is between 2000 and 3000 lbs. to the square inch of the area S; and as their working load ranges from between 200 to 1000 lbs. per square inch, the factor of safety against sinking is from 3 to 10. The factor of safety against direct crushing of the timber should not be less than 10. According to some of the best authorities the test of a pile having been sufficiently driven is, that it shall not be driven more than one-fifth of an inch by thirty blows of a ram weighing 800 lbs., and falling 5 ft. at each blow. The total mechanical energy of this whole series of blows is equal to $30 \times 800 \times 5 = 120000$ foot pounds. The object of driving a number of piles uniformly which are to bear together a distributed load, is to ensure that each pile shall support its proper share of the load. If some datum were not adhered to with respect to the point at which the driving of all the piles should cease, they would be driven down to different depths, and would not have the same supporting power. If the weight were uniformly distributed over the whole number, and some were to yield, an undue pressure would be at once thrown upon those which stood fast; and it is quite possible they might yield, and thus the whole foundation be destroyed piecemeal. It must not be supposed that the supporting power of piles is necessarily proportional to the depth to which they are driven. A great difference in penetration exists at very small distances between piles. We have known main piles driven at intervals of only 5 ft.; and while some went down with facility, others not 10 ft. from them were got down with considerable difficulty.

For practical purposes there can hardly be a better formula for calculating the bearing power of piles than that of R. Sanders. Let W equal the weight which may be safely placed on the pile, R equal weight of ram, F the fall of the ram in making the last blow, and D the distance the pile sinks with the blow, then $W = \frac{R \times F}{8 \times D}$. In comparing the results obtained, and taking as an example the driving of one complete work from practice, Beazeley found that the average supporting power of the piles as calculated by Rankine's formula was 5·20 times, by Weisbach's 5·24 times, and by that given by M'Alpine 0·303 times that obtained from Sanders' formula. Rankine, however, states that the load to be placed on a pile when it is driven to the test should be from one-third to one-tenth, which amounts on the average to dividing his absolute results by the ratio 5·20. Weisbach stated that the load should be from one-tenth to one-hundredth, which appears out of all reason. But as his absolute result, comparing it with practice, tallied very closely with Rankine's, the ratio 5·24 may fairly be taken as a divisor. While Rankine's and Weisbach's formulæ practically agree with that of Sanders, that of M'Alpine indicates too low a result, being only 0·303 of the others.

TABLE II.

No. of Pile.	Depth in Ground.	Total Length of Pile (L).	Value of $P = L \times 0{\cdot}22$.	Value of D.	Value of F.	Sanders' Formula.	Rankine's Formula.	Weisbach's Formula.	M'Alpine's Formula.
	feet.	feet.	tons.	feet.	feet.	Value of W in tons and decimals.			
1	15·00	20·00	0·440	0·0573	10·58	23·09	111·68	128·22	5·93
2	13·00	18·00	0·396	0·1094	11·83	13·52	87·03	77·75	6·27
3	12·00	17·00	0·374	0·0833	10·00	15·00	91·41	87·72	5·77
4	12·50	17·50	0·385	0·0833	10·50	15·75	94·52	91·34	5·91
5	13·25	24·75	0·544	0·0313	10·00	40·00	122·04	206·93	5·77
6	13·00	24·75	0·544	0·0677	11·50	21·23	103·79	109·53	6·19
7	13·67	25·17	0·544	0·0885	10·00	14·12	81·37	72·71	5·77
8	16·00	27·50	0·605	0·0573	10·00	21·82	97·69	109·31	5·77
9	15·58	26·33	0·579	0·0625	10·00	20·00	95·52	101·33	5·77
10	16·00	27·00	0·594	0·0625	10·00	20·00	94·82	100·38	5·77
11	16·75	27·50	0·605	0·0625	10·00	20·00	94·33	99·69	5·77
12	17·50	28·25	0·622	0·0469	10·00	26·67	103·97	131·45	5·77
13	14·67	24·17	0·532	0·0729	10·00	17·14	91·05	89·42	5·77
14	13·50	23·50	0·517	0·0833	10·00	15·00	85·47	79·14	5·77
15	17·67	26·17	0·576	0·0678	10·00	18·46	92·31	93·71	5·77
16	17·25	25·75	0·567	0·0573	8·00	17·45	85·06	89·11	5·77
17	18·25	23·73	0·522	0·0781	10·00	16·00	88·28	84·09	5·77
18	18·67	24·17	0·532	0·0833	10·00	15·00	84·93	78·33	5·77
19	14·92	20·42	0·449	0·0833	10·00	15·00	88·16	82·82	5·77
20	16·25	21·75	0·479	0·0729	10·00	17·14	93·45	92·72	5·77

In Table II. are given the supporting power of piles calculated by the aid of various formulæ. The letters have the following significations;—W equals the safe load on the pile in the formulæ of

Sanders and M'Alpine, and the theoretical load in those of Rankine and Weisbach. F equals the fall of the ram in making the last blow, D equals the distance the pile sinks with the last blow. R is the weight of the monkey, which is a constant quantity and equal to 1 ton. L equals the total length of the pile, and P equals its weight. The sectional area of the pile is represented by S, which is also a constant quantity and equal to 0·7 ft. The modulus of elasticity for slaty gum timber which is constant to every calculation, is equal to E, and has a value of 331,100 inch pounds. The mean results of the last four columns are as follows;—Sanders 19·12, Rankine 99·34, Weisbach 100·28, M'Alpine 5·80; and the corresponding ratios are Sanders 1·00, Rankine 5·20, Weisbach 5·24, and M'Alpine 0·30. The dimensions are all in feet and decimals.

The mean results arrived at by the different formulæ are Sanders' = 19·12, Rankine's = 99·34, Weisbach's = 100·28, and M'Alpine's 5·80; and the corresponding ratios are Sanders' = 1·00, Rankine's = 5·20, Weisbach's = 5·24, and M'Alpine's = 0·30.

When a pile is driven into the ground, it will bear a certain weight without sinking. It will resist further penetration with a certain force. Let this force be represented by F. The amount of work done when the pile is driven, is equal to this force multiplied by the distance the pile is driven. But this distance D and the work done in driving the pile equals F × D. But D is a known quantity, and F could be ascertained if the amount of the work expended in driving the pile could be determined, and that amount divided by D. Now, the mechanical force of a blow of the monkey is equal to its weight multiplied by the distance through which it falls. Making these equal respectively to W and H, and assuming that the whole force is exerted in driving the pile, we have the equation $P \times D = W \times H$, from which $P = \frac{W \times H}{D}$. In Rankine's formula the force of the blow expended in compressing the pile is given by the expression $\frac{F^2 \times b}{4\,E\,S}$. Representing by M the force necessary to overcome the elasticity of the ground, and the equation becomes

$$W \times H = F \times D \times \frac{F^2 \times l}{4\,E\,S} + M.$$

Let the ram fall through a given distance H, and let it drive the pile through a given distance D; and also through another distance H, and drive the pile another distance D_1. In the first instance we have $W \times H = F \times D + \frac{F^2 \times b}{4\,E\,S} + M$; and in the second, $W \times H_1 = F \times D_1 + \frac{F^2 \times b}{4\,E\,S} + M$. Subtracting the one from the other gives $W(H_1 - H) = F(D_1 - D)$; and, finally,

$$F = \frac{W(H_1 - H)}{(D_1 - D)}.$$

If it is required to find the supporting power of a pile, let it be first ascertained what distance it is driven through by the ram falling from a certain height, and then the distance corresponding to a blow from the same ram falling through a greater height. The sustaining power of the pile will be found by multiplying the weight of the ram by the difference of the falls, and dividing the product by the difference of the distances the pile is driven. Instead of taking a couple of blows only, the mean result of several should be ascertained, as the supporting power will be practically constant for a few inches of penetration, except in very springy ground.

An ingenious method for determining the force expended in driving a pile was devised by Heppel, depending upon the fact that if an exact register of the motion of the ram could be obtained, that is, its exact position at given intervals of time, the force which acts upon it can also be determined. A piece of drawing paper was stretched upon a board, as in Fig. 6322, and a pencil attached to a strong spring, fixed to an independent support, and having sufficient range when let go to draw a horizontal line completely across the paper which was divided by vertical lines into equal spaces. A detent held back the spring, and was capable of being released at the time when the board descending vertically passes a certain point. To ascertain at what intervals of time the pencil, in drawing a horizontal line by the action of the spring, passed the several vertical lines, the board was fixed in a vertical slide, so that it might have a fall of 3 or 4 ft.; and the spring was fixed opposite to it, so that on reaching a certain point it released the detent. It was then first moved slowly down to this point till it touched the detent, and the pencil drew a horizontal line. Next it was allowed to drop through a given distance, and on passing the same point, it had now a known velocity which, for the small interval taken up in observing the line, might be regarded as uniform. This velocity being compounded with that of the spring, the line drawn was no longer horizontal, but deviated from that direction in a certain curve. The interval of time which the board took in falling through any vertical distance in Fig. 6322, was ascertained from its known velocity, and as the pencil passed a certain horizontal distance in the same time, the times of its passing all the vertical lines became known. The instrument was now ready for use. In making an experiment the board was fixed to the pile near its head. The spring and pencil were fixed to an independent support, and the detent was so adjusted as to be released the moment the slightest motion in the pile took place. A curved line was thus drawn, and the times at which the pencil must have arrived at each of the vertical lines being already known, the times at which the head of the pile was at the level of their intersections with the curve, became known. As the motion of the ram may be taken to be the same as that of the pile-head, which it would be at any rate up to the point of maximum pressure, which is the most essential point to determine, the velocity of the latter at any

6322.

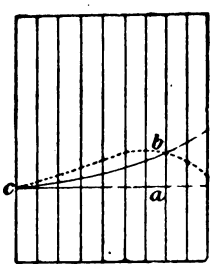

moment can be computed, and consequently the force to which it must at that instant have been subjected.

Pile-driving Machines.—Before commencing to drive permanent or bearing piles, it is necessary to construct good staging and strong guide-timbers, without which it is impossible to drive them properly, more especially sheeting piles. There have been so many different kinds of pile-driving machines invented, some varying considerably, and others but slightly in their details, that it would be difficult to enumerate them; a few, however, may be selected of those which have been most generally used. The ringing machine is one of the earliest invented. Its name was derived from the similarity in the mode of using it, to that of the ringing of church bells. This kind of machine was used by the celebrated French engineer, Perronet, at the construction of the bridge of Orleans. It had a ram weighing 10 cwt., which is much heavier than those used with ringing machines at present. The weight now employed rarely exceeds 3 or 4 cwt., in consequence of the number of men required to raise it in this manner; and it is now only used for light work. One was employed at new Westminster Bridge, to drive thin sheeting piles for a small temporary dam at the middle abutment. The weight of ram used there was little over 1 cwt., five men worked it, giving fifteen to twenty blows a minute, and about 5 or 6 ft. fall. The rams used are made of oak, or elm, hooped with iron. The ringing machine was the usual mode of construction till of comparatively recent date. At one time horses were employed to raise the ram. They were used in driving the guide-piles at the old Westminster Bridge. The machine they worked had a ram weighing nearly 16 cwt., which, with a 20-ft. fall, and by the help of two horses, gave forty-eight blows an hour, or four blows in five minutes; with three horses it gave seventy strokes an hour. After this machine had been used for some time, when the pivots had been rubbed smooth, and the stiffness of the ropes destroyed, three horses going at an ordinary pace gave five strokes in two minutes, with an average fall of 9 ft. Perronet also used horses for driving piles, with a machine worked by means of an armed wheel and a drum. This machine could be fixed on a boat, and the ram was raised by means of a rope passed round the armed wheel, and attached to a horse on the shore. De Cessart used another kind of machine at the bridge of Saumur. In it the axis was 10 in. diameter, and the wheel 12 ft., with trundles to turn it; eight men employed at this wheel raised, at three turns a stroke, a ram, rather more than 13 cwt., 6 ft. high, which was then unhooked.

The pile-driving machine in general use at the present time is much superior to any of the foregoing, both as regards general construction, and the ram used, which is made of cast iron, and is much heavier than was formerly employed.

Of late years steam has been extensively used as a power for raising the ram; among the machines which are worked by steam are the following given in Table III., showing the weight of ram, number of blows a minute, and height of fall.

TABLE III.

	Weight of Ram.	Height of Fall.	Impact.	Blows a minute.
		feet.	tons.	
Common	1¼ ton.	6	24½	5
Nasmyth's	15 cwt. Total Weight of Machine 3 tons.	3	10·4	60
Scott's	1½	6 to 15	29·4 to 46·5	15 to 20
Sisson and White's	1	5	17·6	10

Of these Sisson and White's possesses some especial advantages. It is very portable, does good work, can be easily attached to any common piling machine, and made the means of its own locomotion. Steam pile-driving is the most advantageously employed when rows of piles are required to be driven, as for coffer-dams, or in driving sheeting for quay walls; but where it is necessary to drive piles very accurately, as in bridge foundations, more especially for iron piles or plates, the ordinary crab machine worked by manual labour is the best.

Sisson and White's machine, Fig. 6323, is easily moved, and by a contrivance in the carriage part can be transferred to other lines at any angle with great facility; it requires four men to work it, and consumes about 4 cwt. of coal or gas coke in ten hours. The total weight of the driver and boiler is 6 tons, including the ram and mounting, which are 20 cwt. The bottom framing of the driver is 8 ft. square. Its comparative lightness, and the small space it occupies, make it capable of being worked in any position or circumstances in which a common hand-machine can be put, either on land or afloat. The machine is moved by fastening the end of a rope ahead, passing it over a roller under the winch, and taking a turn round the barrel.

The pile is quickly pitched by attaching a common chain to the pile-head, and the ram usually falls about twelve times in a minute, with a 6-ft. lift. The ram is lifted by means of an eccentric fixed in an opening made in the centre of it, and is made to revolve by a lever, to the outer end of which a cord is attached, and, on being drawn downwards, a bolt is shot out into the open link of the pitched chain in its upward motion. The bolt is withdrawn by the other end of the lever striking against a staple fixed in the front of the guide-pieces, and the ram thus released then falls on the pile. The height of the machine in the annexed drawing, Fig. 6323, is 40 ft., and will pitch a pile 34 ft. long on ground the same level as that on which the machine stands; this height is found to be sufficient for general use, but machines of greater height can be constructed. Telescope drivers are made by which piles can be driven in a tideway down to a depth of 30 ft. below

the stage on which the machinery stands, the ram driving quite down to the ground without using a dolly, to dispense with which is a great advantage.

In setting the machine to work, a centre line should be struck from end to end, and a template made the shape of the point, the centre line of which should line with that of the pile, and the line then scribed. Point the pile with the saw, so as to have a stump point, about 3 in. square, forming a seat for the shoe. The length of the point in timbers 14 in. square, should be 2 ft. 6 in., the point of the shoe should be of solid iron, and the four straps, 18 in. long, and of iron 2 in. by $\frac{1}{2}$ in., nailed on; the strength of the shoe should vary, depending on the nature of the ground, and weigh from 12 lbs. to 30 lbs. The driving hoop to the head of the pile should be of iron, 4 in. by 1 in., truly fitted and driven on by the ram, and in its outside dimensions a little less than the pile in every direction. The pile is held in position by a bolt $1\frac{1}{2}$ in. in diameter, called a toggle-bolt, passing through the pile about 2 ft. from the head to the back of the uprights, and there fixed with an iron plate, nut, and screw · a piece of hard wood must also be placed to fill up the space between the uprights, through which the toggle-bolt also passes, to keep the pile in its position. The $\frac{1}{2}$-in. chain with which the pile is pitched, when not in use, is fastened to one of the diagonal stays, to be kept out of the way. It will be observed that the pulley with the semi-circular groove at the head of the driver, is for the use of this chain. While the pile is being

6323.

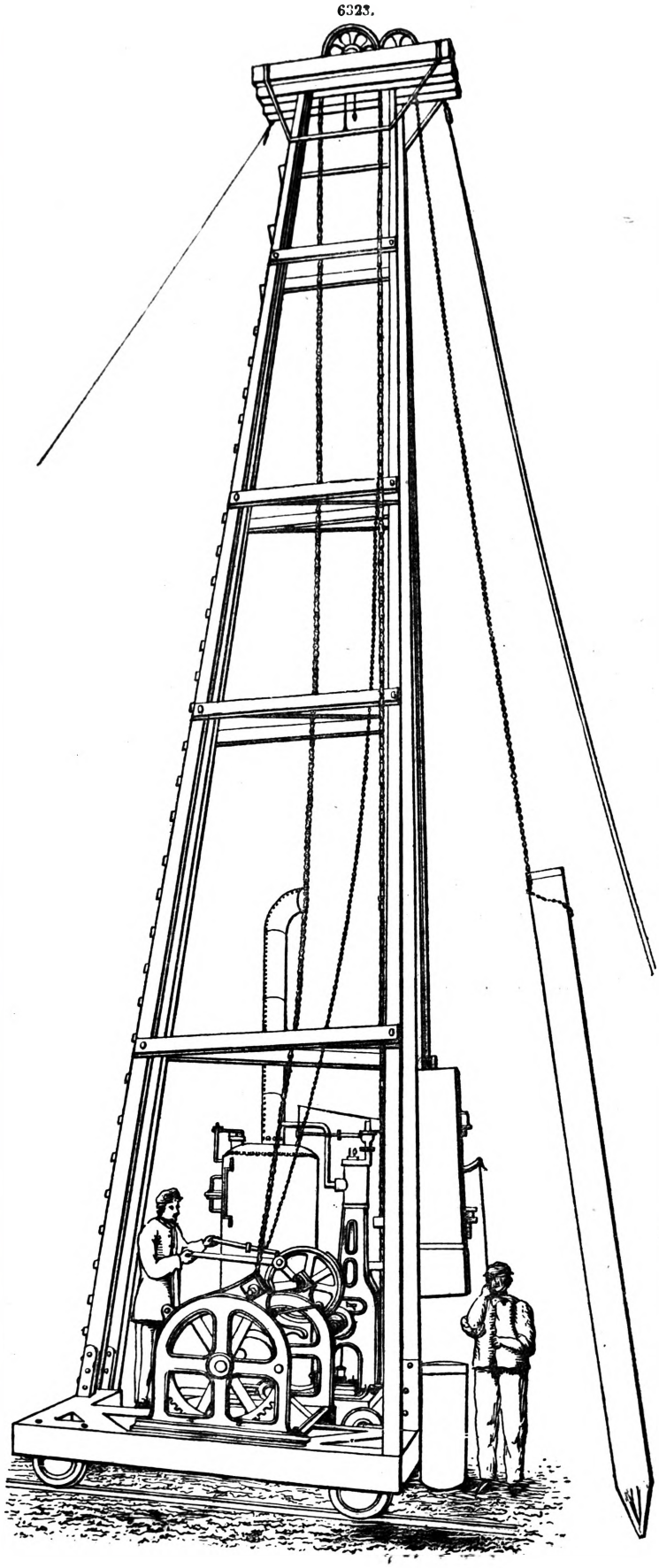

pitched the ram is wound up to the top, or as high as is necessary, and held there by a bolt passing through the uprights, and when the pile is in position then gently lowered upon it. By the lowering of the screw at the foot of the ladder, the incline of the uprights is regulated to suit the batter at which the pile may have to be driven. It will be seen by the holes in front of the guide-pieces to receive the striking-off staples, that the ram need not be lifted higher than these distances before it is struck off, and it is recommended that with a ram above 1 ton weight it should never fall more than from a height of 5 or 6 ft. on a pile of fir timber; the work is quicker done and the wood preserved. To work the driver it requires four men only, namely, one to drive the winch, one on the stages to shift the striking-off staple, one to attend the pile, and one to work the catch. Two stout boys would do to shift the staples, and work the catch. The catch is worked by a piece of strong cord fastened to the hole on the outer end of the lever, and pulled down by the man appointed for that purpose. When the ram has been struck off, the speed of the chain must be reduced by partially cutting off the steam until the catch has again entered the chain. Particular attention should be paid to keep the chain and catch well oiled, likewise the bearings of the top and bottom sheaves, and all the working parts of the winch; and when commencing to work, to let the ram go slowly up to the striking-off staples until everything is free, and the working of the winch is well understood. It is always desirable to have clean, fresh water for the boiler, and should it prime, from having salt or dirty water, or from any grease having been left in, and to prevent priming, put in some soda or potash, and when the steam is up blow off a little at the safety-valve.

When there are a great number of piles to be driven in regular order, such as, for instance, in the floor of a graving dock, the Nasmyth machine gives very good results. In the construction of the Brooklyn dock a large number of the piles were driven by a Nasmyth machine, with a ram weighing 3 tons. The fall or stroke was 3 ft., and from sixty to eighty blows a minute were delivered. The Nasmyth hammer was found to drive piles to a much greater depth than the other machines employed on the works, and although the force of its blows is much less than those of the ordinary rams, when falling 30 ft. it produces a much greater effect. With the Nasmyth machine, piles were driven 35 ft. in seven minutes, while with the other machines similar piles require one hour or more to drive them the same distance. Two trial piles were driven with each of these machines, with the following results;—

TABLE IV.—PILE DRIVEN BY THE NASMYTH MACHINE.

The first	4	blows drove it	4	in. at each blow.
„ next	8	„	$3\frac{1}{2}$	„
„ „	22	„	3	„
„ „	25	„	2	„
„ „	40	„	$1\frac{3}{4}$	„
„ „	56	„	$1\frac{1}{2}$	„
„ „	32	„	$1\frac{1}{4}$	„
„ „	64	„	$1\frac{1}{8}$	„
„ „	73	„	1	„
„ last	49	„	$\frac{1}{2}$	„

This pile was nearly the same size as the other trial pile, and was driven 43 ft. in seven minutes with 373 blows, and was not iron-shod.

TABLE V.—PILE DRIVEN BY A RAM WEIGHING 1 TON, FALLING FROM $\frac{1}{2}$ TO 35 FEET.

The first	100	blows drove it	a few feet.	
„ next	260	„	30 in.	in all.
„ „	265	„ from	$\frac{1}{2}$ to $1\frac{1}{2}$	in. at each blow.
„ „	110	„ „	$1\frac{1}{4}$	„

This pile was driven 45 ft. with 735 blows. It was 20 in. in diameter at one end and 14 in. at the other, and was shod with iron. It occupied 166 minutes in the driving, namely, 264 blows in 46 minutes, 265 blows in an hour, and 110 blows in an hour. The rapidity of the action of the Nasmyth hammer is of great advantage. The blows succeeded each other at intervals of a second, and before the material which had been displaced by the vibrations of the preceding blow could settle round the sides of the pile, and therefore nearly the whole force of the blows was employed in displacing the earth near the pile. With the other machines the blows were given at intervals of a minute, by which time the vibrations caused by the preceding blow had ceased, and the semi-fluid material had subsided round the pile, so that a considerable portion of the force of the blows was consumed in overcoming the friction along the sides, thus leaving only a comparatively small part of the force to displace the earth at the bottom of the pile.

Fig. 6324 is a front elevation, and Fig. 6325 a side elevation, of Nasmyth's pile-driver.

The foundation on which the machine is erected consists of a strong wooden platform A A, firmly framed together and strengthened by diagonal timbers and wrought-iron corner pieces, the whole being further secured by cast-iron brackets B, B, at each angle of the platform, in which the locomotive wheels *a*, *a*, are fitted to work upon rails disposed parallel and close to the line of piling on which the machine is destined to operate. The great vertical guide-pole C C, on which the driving apparatus slides, is securely bolted to one side of the platform, the boiler being situated towards the opposite side, to counterbalance the weight of the former, and to afford an abutment for the diagonal timber supports D, D, bound to both by plates of iron and numerous bolts. The entire framework of the machine is also secured by the four adjustable tie-rods *b*, *b*, attached to the four corners of the stage and to the top of the upright. This latter is surmounted by a cast-iron socket-frame supporting the brackets E, E, which carry a chain pulley, over which works the great

6324.

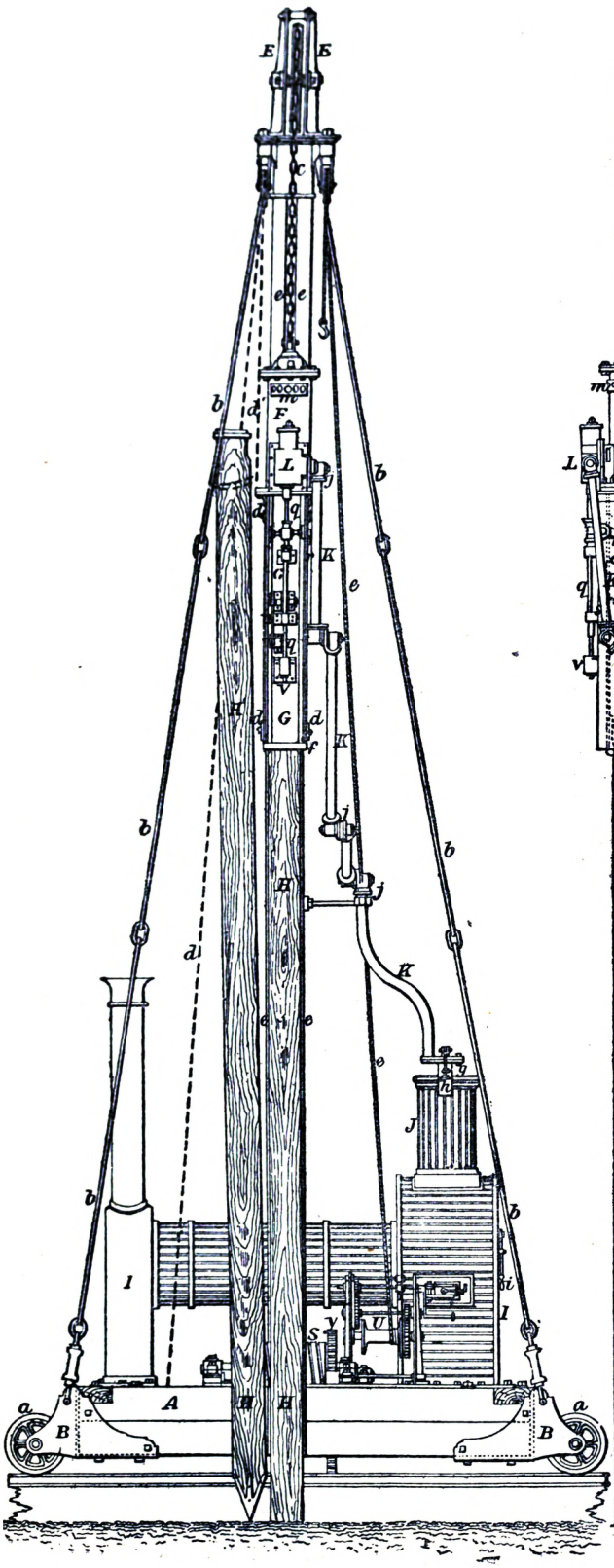

6325.

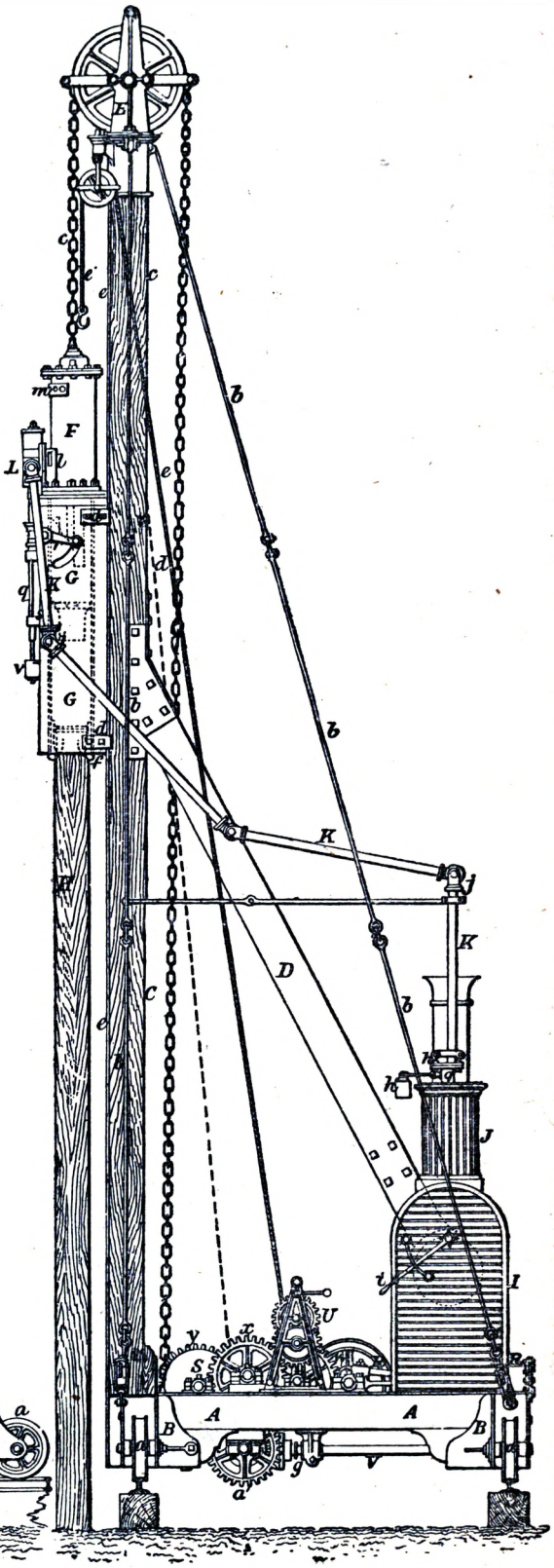

chain *c c*, one end of which is passed round a barrel worked by a small steam-engine, while the other end is attached to, and sustains the weight of, the pile-driving apparatus.

This consists of a steam-cylinder F, with all the necessary appendages. The lower flange of the cylinder is firmly bolted to the pile-case G G, which is a species of rectangular box of a square section, constructed of plates of wrought iron strongly framed together. The interior surfaces of the pile-case serve to guide the hammer-block in its vertical motion, and it is itself guided along the great upright C C, by the pieces *d*, *d*, which are fitted to embrace the projecting slips of iron *e*, *e*, bolted to the front of the upright throughout its entire length. The lower end of the pile-case is open, to admit the head of the pile, and is furnished with cast-iron jaws or resting-pieces *f*, *f*, bolted to its interior surfaces; these are so formed as to rest upon the shoulders of the pile H, which, if we suppose the great chain barrel to be left free to revolve, thus becomes the sole support for the weight of the whole mass of the driving apparatus. By these arrangements, it will be seen that as the pile is, by successive steps, forced into the ground by the action of the hammer, the chain barrel being thrown out of gear with its driving apparatus during the process, the pile-case, with all its appendages, weighing about 3 tons, is left at perfect liberty to bear upon the shoulders of the pile, and follow down along with it, while at the same time, and by the same means, the pile itself is guided into a strictly vertical and true course.

The driving apparatus consists simply of a modification of Nasmyth's steam-hammer, the action of the various parts being in all respects identical, though the whole is movable. The steam necessary for its supply is generated in a boiler Y, the construction of which is very similar to that of the ordinary locomotive engine boiler. The steam-chest T surmounts the fire-box, and is made of sufficient height to prevent the influx of water into the steam-pipes, and the entire boiler and steam-chest are covered externally with a coating of felt, and with strips of wood to prevent the radiation of heat, and to give greater symmetry of appearance. On the cover of the steam-chest is cast a small square box *q*, containing suitable bearings for the safety-valve, which is loaded by a weight and combination of levers *h*, *h*, and for the throttle or shut-off valve, commanded by the lever-handle and rod *i*, *i*. The steam is conveyed from the boiler to the valve-chest of the driving cylinder by a flexible steam-pipe K K, composed of several lengths of wrought-iron tube, connected together by swivel joints of cast iron *j*, *j*. This arrangement admits of the steam-pipe accommodating itself, without any loss of steam from leakage, to every variety of height or distance at which the driving cylinder may be from the boiler, from the commencement of the process, when the apparatus is sitting aloft upon the shoulders of a tall pile, until it has arrived at its lowest position, when the pile has penetrated the soil to the required depth.

The remaining part of the driving apparatus is, as we have before had occasion to remark, identical in the principles of its action, and very similar in the details of its construction, to those of the Nasmyth steam-hammer.

F is the steam-cylinder, within which the power necessary for raising the hammer to the required elevation—3 ft.—is generated.

L the steam valve chest, bolted to the lower side of the cylinder, within which a valve is fitted to work upon a face cast with the cylinder.

The steam, after having accomplished its work, is permitted to escape into the atmosphere by an oblong aperture *l*, formed in the cylinder face; and, to obviate the risk of accident from the piston rising too high, a number of small round holes, *m*, *m*, are formed near the top of the cylinder, so that the steam may blow out into the air when the piston rises above their edges.

Within the cylinder F is the piston, formed of wrought iron, and fitted with a single packing ring, and the piston-rod, having a cylindrical boss or enlargement at its lower extremity, for the purpose of affording means for securing a slightly elastic connection, by hard-wood washers, between the piston-rod and hammer-block.

The hammer-block, consisting of a rectangular mass of cast iron weighing 30 cwt., is adapted to slide freely, but without much play, within the pile-case G G. It is furnished with suitable recesses for the securing of the hammer piston-rod, and for enabling it to rise clear of the cylinder stuffing-box; and at its upper extremity a recess, in the form of a species of inclined plane, is provided, for the purpose of acting upon the valve-lever, so as to permit the escape of the steam after it has raised the hammer to a sufficient height.

The hammer is a cylindrical block of cast iron, formed with a slightly concave face, fitted into the hammer-block, and fastened thereto by a wrought-iron key, which at the same time serves to secure the connection of the piston-rod.

q, the valve-spindle, produced downwards and working in suitable bearings, so as to bring it under the action of the trigger at the termination of the stroke.

r, the valve-lever, working outside of the pile-case, but having a small friction-roller attached to its inner end, and situated so as to come under the action of the inclined plane.

s, the trigger, the function of which is to keep the steam-valve in such a position as to prevent the admission of steam into the cylinder during the descent of the hammer-block.

Beneath the trigger is a parallel bar, against which the latch-lever acts at the termination of the stroke, for the purpose of releasing the valve-spindle from the trigger, in order to allow the steam to be admitted for a fresh stroke.

u, the parallel motion bell-cranks and connecting rod of the disengaging apparatus.

v, a buffer-box for the purpose of restricting the travel of the valve to its proper amount, and of deadening the shocks to which it is subjected.

The power by which the pile-case and its appendages are elevated to the top of the great vertical guide-pole, and the means employed to render the whole machine locomotive, is supplied by a small horizontal steam-engine R, situated opposite to the great upright C, and under the boiler I, from which it derives its supply of steam. The motion of this steam-engine is transferred to the axis of the great chain barrel by means of a train of spur-gearing, calculated to increase the power to the required extent. Two broad plates of wrought iron, extending across the entire platform, and bolted

securely to its timbers, afford a sufficiently firm foundation for the engine, and for the bearings of the various shafts in the train of wheels, which consists of three pairs marked *w*, *x*, and *y*; the

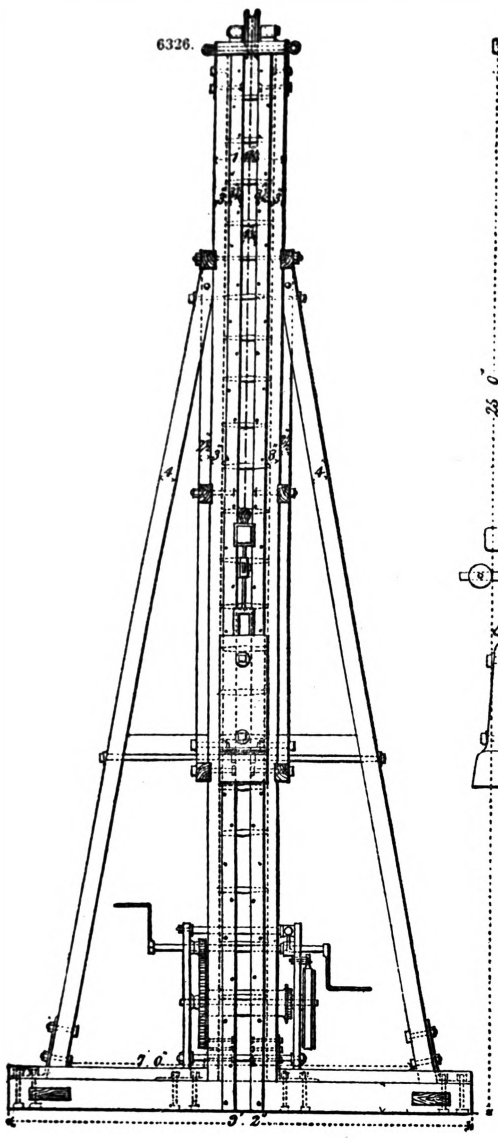

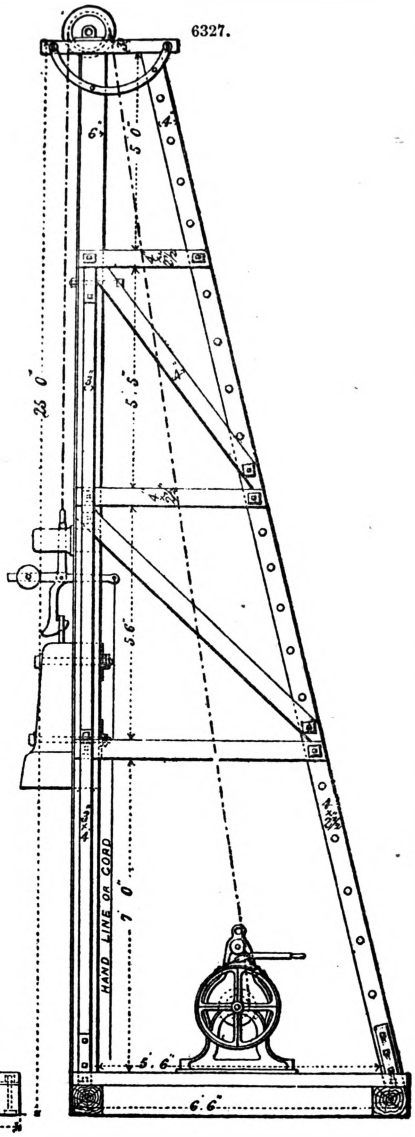

pinion of the first pair being fixed upon the crank-shaft of the engine, and the wheel of the last upon the axis of the chain barrel. The pinion *y* is fitted to slide longitudinally upon its shaft by means of a sunk feather, and is commanded by a lever-handle, so as to enable the attendant in charge of the machine to throw it out of gear with the wheel upon the chain-barrel shaft, when the latter is to be left free to revolve during the driving of the pile. The wheel *x*, upon the third motion shaft, gears with a similar wheel *a'*, fixed upon a cross shaft working in bearings under the platform, and serving to impart motion at once to a small chain barrel for hoisting the piles and to the locomotive gear. A clutch, or coupling, sliding upon the shaft, enables the attendant to throw the small chain barrel into gear with the driving apparatus, or disengage it at pleasure; the remaining details of this part of the process will be fully understood by reference to Fig. 6324, where a pile H' is shown suspended from the chain *d'*, ready to come under the action of the driving machinery. To adjust the pile-case over the head of the pile at the commencement of the driving, it is necessary that one or two men should

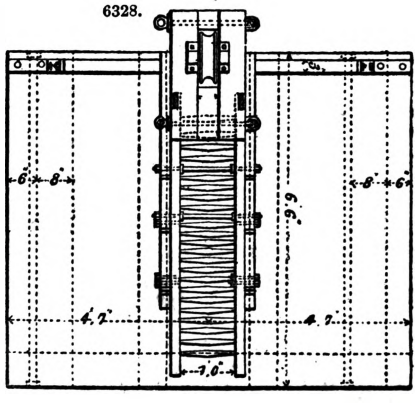

be raised to the summit of the machine. A rope e', passed over a pulley at the top of the great upright, and wound round the barrel of a winch U, serves to accomplish this object.

The locomotive gear is exceedingly simple, and will be at once understood by referring to Figs. 6324, 6325. A bevel-wheel fixed to the outer end of the shaft, supporting the wheel a', gears with another of equal diameter, working loose upon the shaft V, to which a pair of the locomotive wheels a, a, are fixed. When it is required to move the platform with its superincumbent machinery along the line of rails, a sliding clutch g' is thrown into gear with the last-mentioned bevel-wheel, and is disengaged when the machine has arrived at the desired position.

Action of the Machine.—The pile having been raised by means of the hoisting apparatus, and its point having been set into the proper position, the pile-case G G, with its attached machinery, is lowered down over the head, by reversing the small engine R, so that the jaws f, f, rest upon the shoulders of the pile, which sinks down into the ground by the effect of the superincumbent weight, till it has reached soil sufficiently firm to support it; this is indicated by the chain $c\,c$ becoming slack. The pinion y is then thrown out of gear, and the steam is admitted into the driving cylinder F by turning the handle i. The hammer-block is by this means raised till its inclined plane, coming in contact with the end of the valve-lever r, causes the valve to discharge the steam from the under side of the piston. The steam which had served to raise the hammer is thus allowed to blow out into the air, and the hammer descends and discharges its momentum in the form of an energetic blow upon the head of the pile. During the descent of the hammer-block, the steam-valve is retained in its proper position by the action of the trigger s, but by the effect of the concussion upon the head of the pile, the valve-spindle is released from contact with the trigger, and the steam-valve allows steam to act freely under the piston, for the purpose of again raising the hammer.

A very good machine by Appleby Brothers, of London, is shown in Figs. 6326 to 6328, which represent a hand-machine in side elevation, front elevation, and plan. A somewhat similar example by the same makers adapted for steam power is shown in Figs. 6329 to 6331.

The hand pile-driver, Figs. 6326, 6328, is usually 30 to 40 ft.

6329.

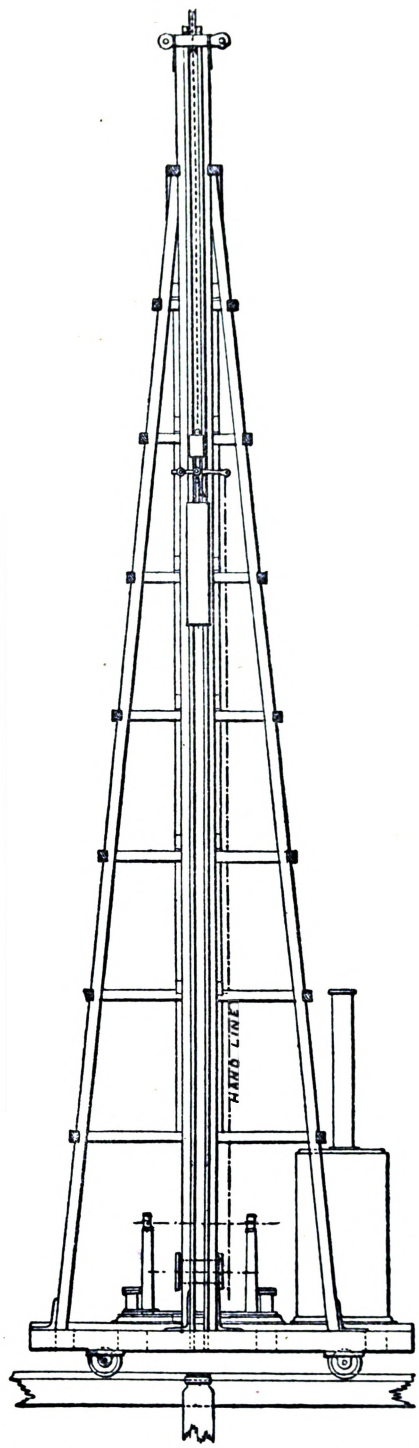

6330.

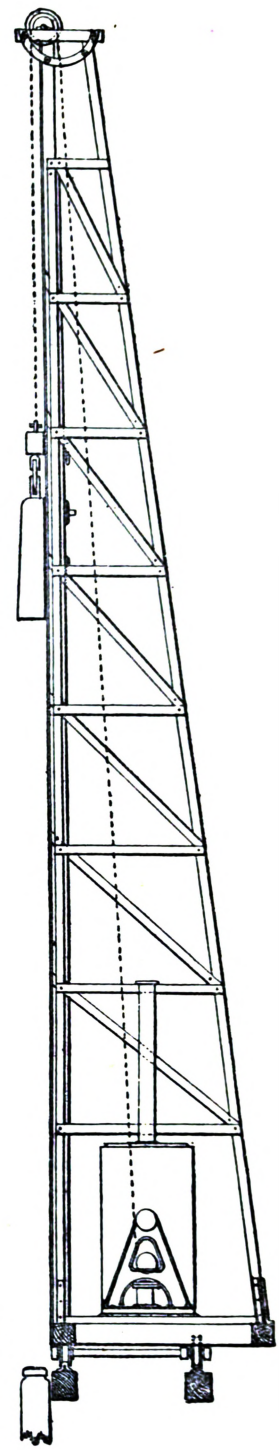

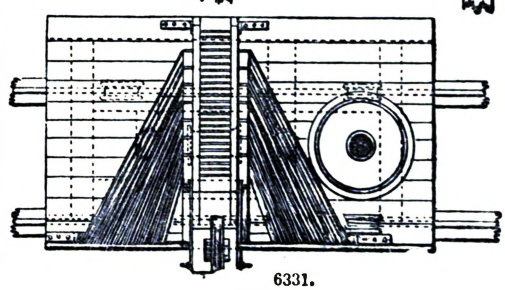

6331.

high, and consists of a pair of timber leaders 6 × 8 placed on a square frame about 4 in. apart, the front and back being plated with wrought iron; the top of the leaders carry a cast-iron sheave working freely in a pair of carriages; side struts and back struts are braced to the leaders, and wrought-iron knees render the whole a stiff and rigid framing. The cast-iron ram for a machine of this kind is from 10 to 18 cwt., and has a feather cast on the back to fit loosely into the groove formed by the two leaders, two bolts and plates passing through it to prevent it from falling out of its guides; a strong staple of square iron is cast into the top; the ram should not exceed 12 in. square, as it frequently happens that one pile will go much lower than another, and if the ram is larger than the pits it does not follow down between those on each side. The crab-winch is of single purchase with long and strong handles, so that four or five men can work at them; the attachment of the chain to the ram is made by a catch lever or nipper; this is attached to the end of the chain together with a cast-iron balance-weight guided on the leaders in a similar manner to the ram, and which serves to overhaul the chain after a blow has been made. The method of working the machine is as follows;—the ram is attached to the chain by the nipper, engaging the staple on the ram, and the men at the winch raise the monkey any desired height, when the gauger, by means of a hand-line and lever, releases the ram, which falls on the pile-head, the hand-shaft of the winch is thrown out of gear, and the balance-weight brings down the chain to the ram for the next blow; the descent of the balance-weight and chain is regulated by a break on the crab under control of one of the men.

The steam pile-driving machine, Figs. 6329 to 6331, is a simple adaptation to perform the operation by steam. The frame is the same in construction as that last described, but is made much stronger, a double-cylinder steam-winch taking the place of the hand-winch; the barrel is loose on its shaft, but can be made fast to it by a toothed clutch and lever, the same lever actuating a brake on the barrel to control the ascent of the chain and balance-weight; the boiler can be placed on the same frame, or in some cases a number of engines are worked from one boiler, which is placed in any convenient position, the pipes being laid as far as practicable in iron, with a short piece of flexible steam hose connecting the pipe and crab so as to admit of the pile-driver being moved a considerable distance without altering the connections; the engines run continuously in one direction, and when the barrel-clutch is thrown into gear, the ram ascends until released by coming in contact with a stop, or by the hand-line which is attached to the nipper; immediately this is done the operator at the winch throws out the clutch, and the balance-weight and nipper overhauls the chain, and from the construction of the nipper attaches itself to the staple of the ram ready for the next lift. Ten to twelve blows a minute can thus be easily made.

The whole machine is often mounted on a set of flanged wheels and axles for moving along a tramway. The frames are so constructed as to throw the leaders out of the perpendicular when it is required to drive the piles on a batter.

The steam pile-driver, Figs. 6332 to 6335, belongs to the class of endless-chain pile-drivers, which have come into use for large works both in this country and abroad, being found to possess an important practical advantage in the continuous motion of the chain running always in the same direction. In consequence of this, the engine never requires to be stopped or reversed during the performance of the work, nor are any reversing clutches required for reversing the motion of the crab winding the chain.

6332.

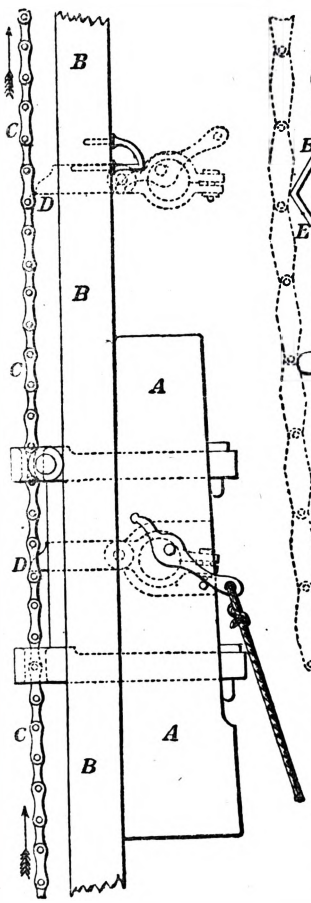

6333.

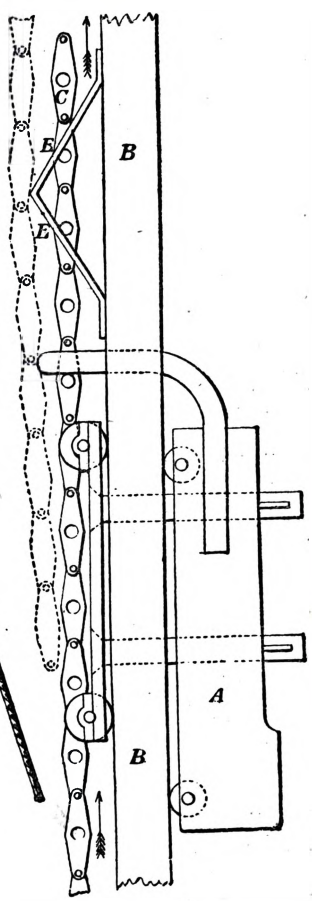

The chief improvement aimed at in this pile-driver, states Peter B. Eassie in the Proceedings Inst. M. E., has been to lift the ram by its centre of gravity, and thus reduce the friction on the front and back of the leaders. In the pile-drivers hitherto in use the ordinary mode of attachment of the lifting chain to the ram has been shown as in Figs. 6332, 6333, where the attachment of the ram A to the chain C as it the back of the leaders B; and the ram is released either by withdrawing the catch D, as shown in Fig. 6332, or by throwing out the chain from the catch by an inclined stop E, as shown in Fig. 6333. Although the effect of the blow, when the ram is released, is the same as with any other mode of attachment, the friction in lifting is excessive, in consequence of the nipping action at front and back of the leaders, arising from the canting of the ram against the leaders; and this binding

effect increases in intensity the greater the distance of the point of attachment from the line of the centre of gravity of the ram. This friction has been ascertained by experiment to amount to nearly one-fourth of the whole weight of the ram, so that in lifting a ram of 1 ton weight the force required to be exerted amounts to 1¼ ton, in addition to that required to overcome the inertia of the machinery.

6334.

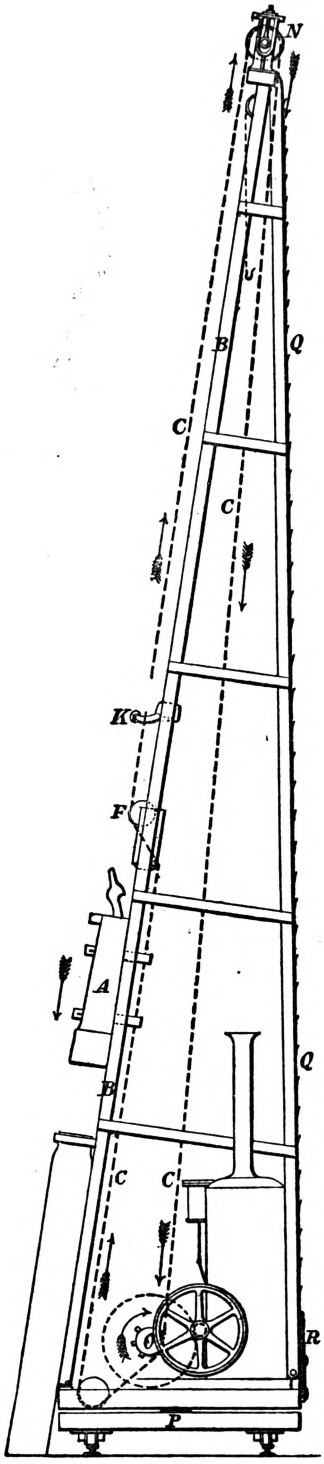

6335.

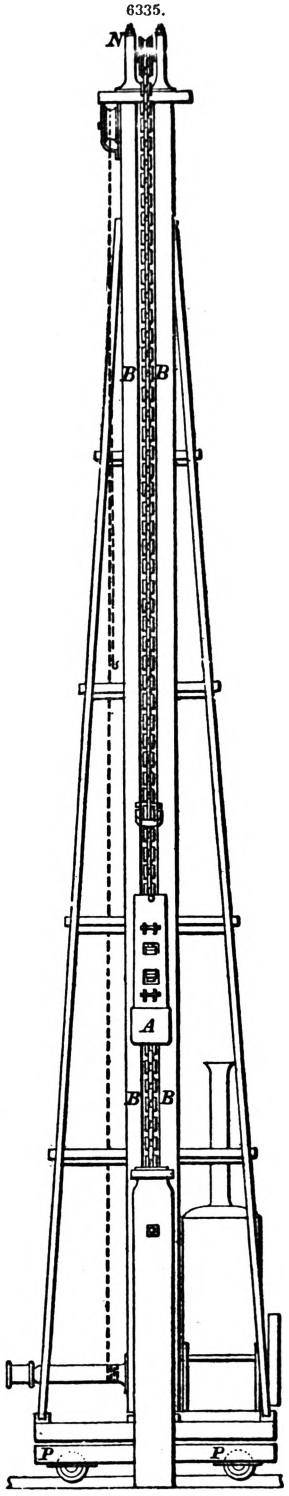

6336.

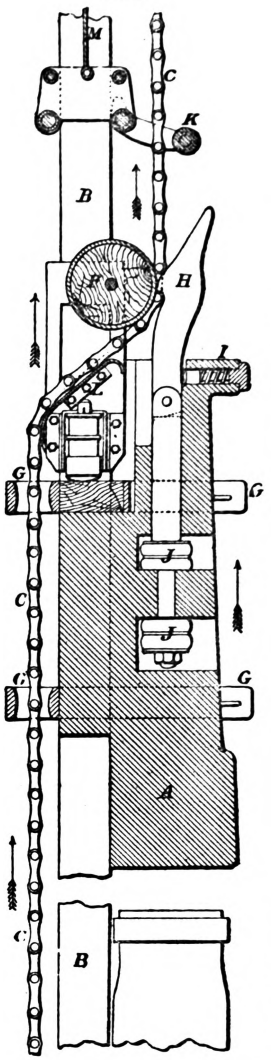

6337.

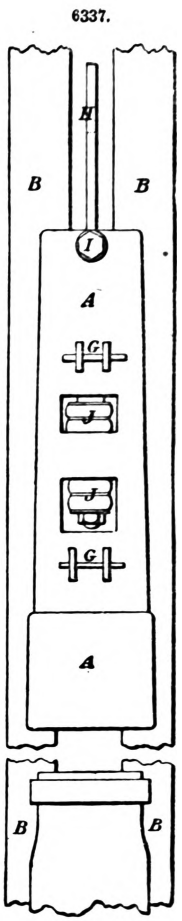

6338.

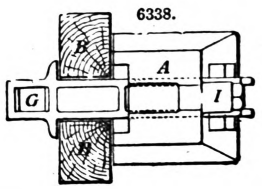

Fig. 6334 is a side elevation of the pile-driver, driving a raking pile; and Fig. 6335 shows a front elevation of the machine.

The ram A, shown to a larger scale in Figs. 6336 to 6338, weighing from 15 to 30 cwt., slides freely between the leaders B, B, being kept in position by the two clamp-bolts G, G, which fit into slots in the ram, and have eyes at the back for the lifting chain C to pass through. The steel hook H, for lifting the ram, is jointed on the top of a rod passing through the centre of gravity of

the ram; and is constantly pressed inwards by a small spiral spring I, so as to engage in the links of the lifting chain C. The attachment of the lifting rod to the ram is made with springs J, J, in order to ease the sudden strain occasioned by the weight of the ram being thrown suddenly upon the chain. India-rubber springs are found to serve this purpose the best, steel volute springs having been found liable to break, as the space through which the lifting rod has to yield amounts sometimes to as much as 2 in. when the chain is driven at its greatest speed.

The lifting chain C, passing up through the eye-bolts G at the back of the ram, Fig. 6336, is brought forwards to the front of the leaders B and into the line of the centre of gravity of the ram by means of the follower F, which consists of a light iron frame carrying the roller F, and sliding freely between the two leaders B, B, as shown to a larger scale in Figs. 6339 to 6341. During the ascent of the ram, the follower rests upon the top of it, and is carried up with it, and as soon as the lifting hook H has been disengaged from the chain by the striker-off K, Figs. 6334 and 6336, the ram falls and gives the blow, and the follower runs down after it as rapidly as the friction of the chain in passing under the roller F will allow. The slight retardation thus produced in the descent of the follower is sufficient to allow time for the rebound of the ram after striking the blow to cease, before the follower overtakes it; and an india-rubber buffer-spring fixed in the bottom of the follower reduces the shock of the follower falling upon the ram. The roller F of the follower is made of wood hooped with iron, and revolves freely between the side plates of the follower; while the sloping fender-plate L prevents the slack of the chain from accumulating at the follower. The follower is guided between the leaders B, B, by four strips of angle-iron riveted on the side plates, as shown in the plan, Fig. 6341; and as soon as the follower overtakes the ram, it brings the lifting chain within reach of the hook H, which instantly engages in the chain again, and the ram is raised as before.

6339.

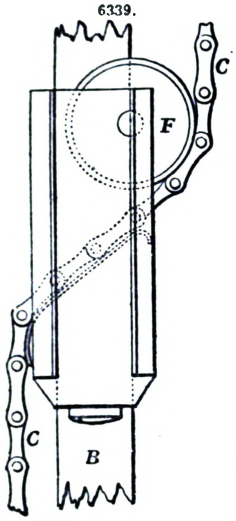

6340.

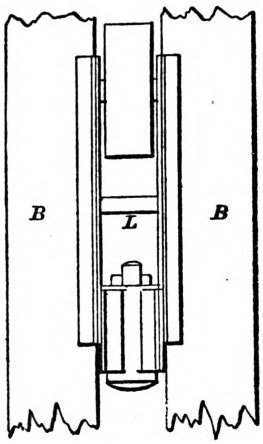

6341.

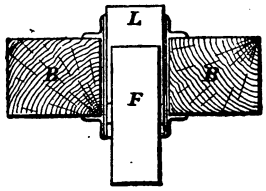

6342.

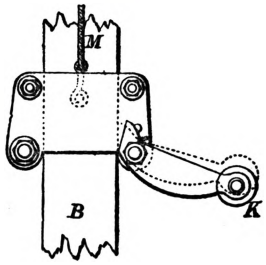

6343.

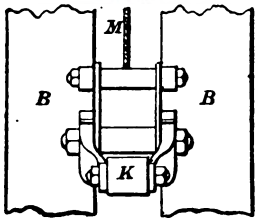

6344.

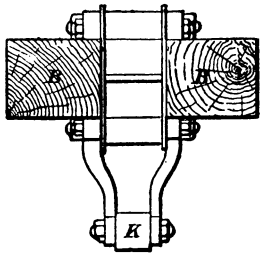

6345.

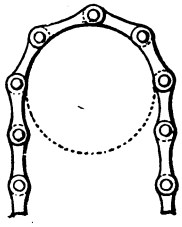

6346.

The striker-off, for disengaging the ram from the lifting chain, is shown in Figs. 6342 to 6344, and consists of an iron framing somewhat similar to the follower, on the front of which is a pair of bell-crank levers carrying a roller. When the engaging hook H of the ram comes in contact with this roller, it first raises the levers and gives them a nipping action upon the leaders B, by which the striker-off is held tight in its place and prevented from being lifted by the ascent of the hook; and then the roller K, bearing against the tapered extremity of the hook, disengages the hook from the lifting chain C, and the ram falls freely. The height of fall is regulated simply by raising or lowering the striker-off by the cord M, which passes over a pulley on the top of the leaders, the end of the cord being secured within reach of the engine-man.

The endless pitch-chain, by which the ram is lifted, is shown in Figs. 6345, 6346, and consists of double and single links alternately; the lifting hook of the ram engaging in the spaces left between the double links. The links are curved on the edges to fit the rollers over which the chain runs. The pins are of steel, and the middle portion passing through the centre link is made of rather larger diameter than the two ends, leaving a shoulder against which the outside links are riveted on tight, so that the centre link can work freely on the pin. At about every 8 ft. in length

of the chain a screw-pin is used instead of a rivet, for facility in putting the chain together, or for taking it to pieces in case of repairs.

During the working of the pile-driver, the chain is kept constantly running in an upward direction in front of the leaders for lifting the ram. It passes over the pulley N, Figs. 6334, 6335, at the top of the leaders, and thence down to the pitched wheel O on the main shaft of the crab; then under a guide-roller in the platform of the machine, and up behind the leaders to the follower F, by which it is again brought in front of the leaders above the ram A. The chain is tightened or slackened as required by means of adjusting screws regulating the position of the top pulley N. In practice it is kept slack enough to allow of the follower F descending readily by its own weight after each fall of the ram.

The whole machine is carried on a platform P, Figs. 6334, 6335, having at each corner double-flanged wheels, so that the pile-driver can be moved easily in either direction on rails laid down for the purpose. On this lower platform is carried an upper one, turning upon a centre-pin like an ordinary turn-table, so as to allow the pile-driver to be faced to any of the four sides of the machine. On the upper platform are hinged the leaders B and side stays, connected by framing to the back ladder Q, at the foot of which there is a strong adjusting screw and guide R, allowing the pile-driver to be set to any inclination up to 1 in 6 when required, in order to drive raking piles, as shown in Fig. 6334. The boiler is an upright one, and the engine is placed vertically with the cylinder inverted, working down upon the crank-shaft, on which is the pinion driving the crab O. The large shaft of the crab carries a double clutch-box, having on one side the chain-drum for lifting the pile, and on the other side the pitched wheel driving the endless chain C which raises the ram. A brake is provided, so that either the pile or the ram can be lowered gently at any time.

The pile-driver, Fig. 6347, is called a telescopic pile-driver, being designed not only to command a large area and put down a pile readily in any position included by the line of rails on the gantries S, S, but also to drive piles 30 or 40 ft. below the level of the rails on which it traverses. It is thus of great value in running out piers in deep water or driving piles in trenches. Fig. 6347 represents the nature of the work that had to be executed by the first pile-driver of this construction, which was adopted by the English Admiralty for driving piles in trenches at Chatham. In this case the trenches were cut out of soft clay and other yielding materials, so that the sides required supporting by means of the struts T,T; and it was therefore necessary that in traversing longitudinally over the trench the pile-driver should pass clear above the struts T.

6347.

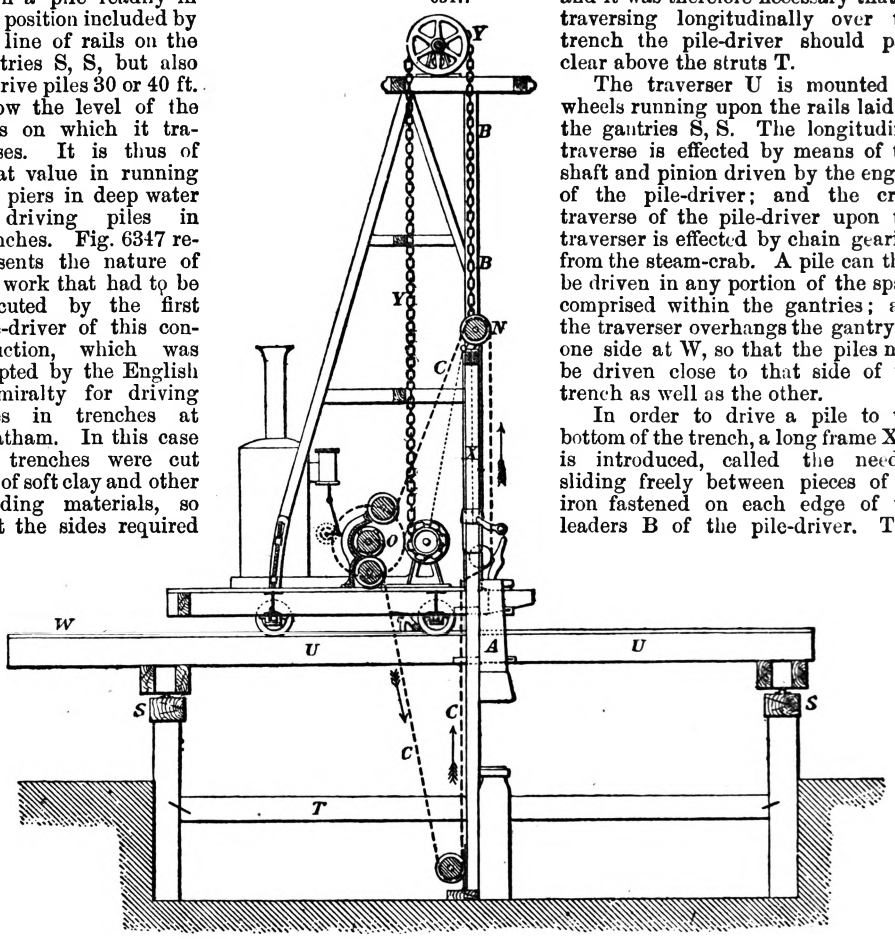

The traverser U is mounted on wheels running upon the rails laid on the gantries S, S. The longitudinal traverse is effected by means of the shaft and pinion driven by the engine of the pile-driver; and the cross traverse of the pile-driver upon the traverser is effected by chain gearing from the steam-crab. A pile can then be driven in any portion of the space comprised within the gantries; and the traverser overhangs the gantry on one side at W, so that the piles may be driven close to that side of the trench as well as the other.

In order to drive a pile to the bottom of the trench, a long frame X X is introduced, called the needle, sliding freely between pieces of T iron fastened on each edge of the leaders B of the pile-driver. This frame is raised and lowered by the chains Y, attached to each side of it and winding upon a drum on the steam-crab; and it serves as the guide for the ram and follower, in place of the leaders themselves. The plan usually adopted is to fasten the lower end of the needle X to the head of the pile, or the needle may be lowered at once to the bottom of the trench, as in Fig. 6347. After the pile has been driven, the needle is raised clear of the struts T or level with the rails, and the machine can then be traversed in any direction longitudinally or transversely, the whole of the movements and the lifting of the needle being effected by the steam power on the platform of

the pile-driver. The leaders and side stays of the machine are hinged, so that they can be adjusted for driving raking piles with the needle, with the same facility as in the construction of pile-driver previously described. The endless pitch-chain C is connected solely to the needle X and steam-crab O, and as it never requires to be stretched perfectly taut, it is always ready for immediate use, whether the needle is raised to the top or lowered to the bottom of the trench.

The cast-iron pile shoes, Figs. 6348 to 6356, were designed by Peter B. Eassie for the purpose of

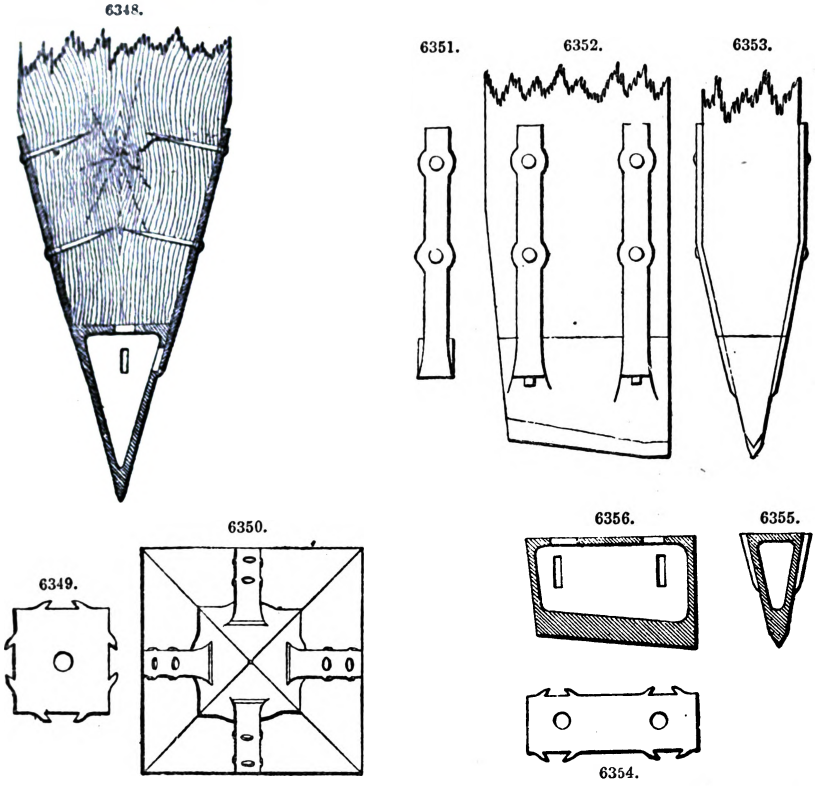

affording a broad base to the wood of the pile itself, and also with a view to economy of space in packing for export. The shoe shown in Figs. 6348 to 6350 is for an ordinary square pile, and that in Figs. 6352 to 6356 for a sheet pile; consisting in each case of a hollow casting forming the toe of the pile, with dovetailed recesses cast on for the attachment of the wrought-iron straps, Fig. 6351, which after being adjusted are fastened to the pile by spikes in the ordinary manner. All the dovetails and the ends of the straps being made alike, they are readily attached, and are found to take up considerably less room in stowage than many other constructions; while owing to there being no holes at the point of attachment, the straps can be made small in size. Before being used these hollow shoes are sometimes filled up with cement or some other material easily obtained at the site of the work.

The accompanying Table on the authority of P. B. Eassie gives the particulars of half-a-day's work with one of the telescopic pile-drivers employed at Cardiff Docks. Some difficulty was experienced in this case in getting at the exact height of fall of the ram, as the machine was at work upon gantries, driving piles in water; but the fall was ascertained to be on an average about 10 ft. The last forty or fifty blows were given with a fall of 14 ft., causing the pile to go down from $\frac{1}{8}$ in. to $\frac{3}{16}$ in. a blow. The weight of the ram was 21½ cwt.; and the size of the piles was 13 in. square, and their average length 46 ft.

TABLE VI.—TELESCOPIC PILE-DRIVER AT CARDIFF DOCKS.

	Length driven.	Total No. of Blows.	Time occupied.			Mean Steam-pressure.
			Setting.	Driving.	Total.	
	feet.	No.	mins.	mins.	hrs. mins.	lbs.
Pile No. 1	35	113	40	40	1 28	42
„ No. 2	27	140	30	35	1 18	45
„ No. 3	32	130	50	34	1 50	43
Average	31	128	40	36	1 32	43

The average result of the observations made upon the driving of these three piles in succession was that the number of blows required to drive each pile to a depth of 31 ft. was 128 blows, and the time occupied in actually driving was 36 minutes; the total time spent in driving the three piles, including all delays, was 4½ hours.

Screw Piles.—A screw pile differs from an ordinary pile of timber, or cast or wrought iron, by being furnished at the lower extremity with a screw or spiral. The screw is of particular construction, as it is provided with only two or three blades, which are of different diameter. The upper of these has the greatest resistance to contend with, and is therefore of a larger diameter than the others, sometimes reaching the dimension of 4 ft. The pile being adjusted in either a vertical or inclined plane as required, a rotary movement is imparted to the upper extremity, and the penetration commences. One of the chief merits in thus obtaining a foundation is that the pile does not dislodge the earth near and round about it. Thus fixed in position, the pile can be used either as a mooring post, or as a portion of a pier upon which to erect a bridge, jetty, or other superstructure. The screws are either cylindrical or conical, of cast or wrought iron, and the piles may be also of either material, or of timber. According to the nature and consistency of the ground to be penetrated, so must the shape and size of the screw be. If the earth is of a loose, friable, easily penetrable character, a cylindrically-formed screw will answer for the purpose; but if it is of a compact, tenacious description it becomes necessary to use a screw in the shape of a cone. No screw, whatever may be its form and powers of boring, will penetrate into rock, but the principle has been successfully applied in instances where the foundation was a bed of coral. As a rule, a capstan worked by manual labour is found sufficient to drive a screw pile. One of these machines with eight bars about 20 ft. in length, each manned by five or six labourers, has been found capable of getting down a pile 4 ft. in diameter, to a depth of 15 ft. in an hour and a half, in ground composed of sand, clay, and loose rock of a schistose nature. The conditions being the same, a period of two hours was sufficient to sink a screw pile to a depth of 21 ft. In cases where it is not possible to employ the leverage of capstan-bars, the head of the capstan is furnished with a wheel which can be worked by an endless rope or chain set in motion by a gang of men. Where the earth is very dry, screw piles can often be got down by very simple means. It sometimes suffices to fix to the upper end of the pile a rod with an eye in it to attach a short iron lever, and screw the pile down. This arrangement will only be available for short depths.

The ordinary screw-pile is represented in elevation in Fig. 6357, which shows the end portion

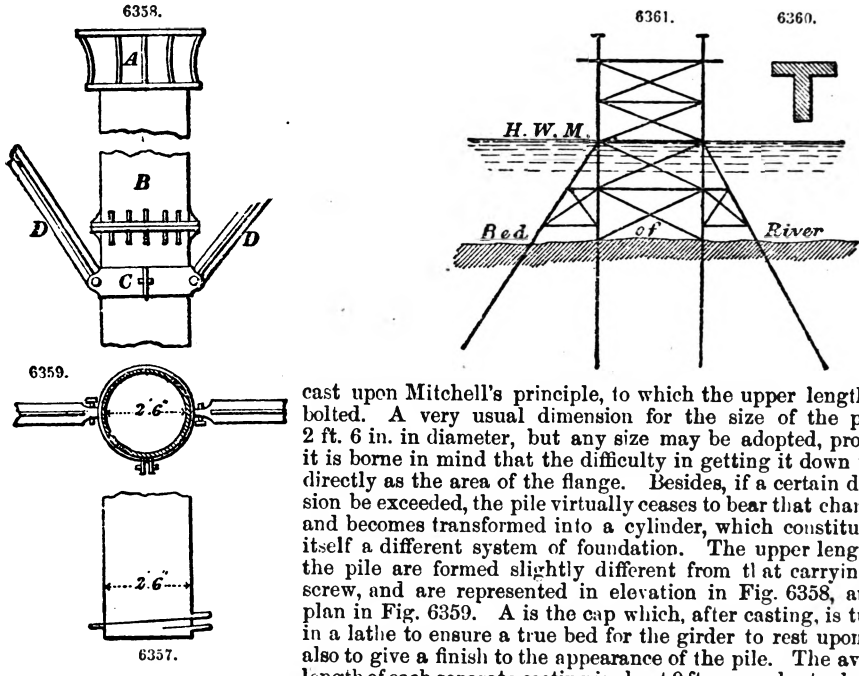

cast upon Mitchell's principle, to which the upper lengths are bolted. A very usual dimension for the size of the pile is 2 ft. 6 in. in diameter, but any size may be adopted, provided it is borne in mind that the difficulty in getting it down varies directly as the area of the flange. Besides, if a certain dimension be exceeded, the pile virtually ceases to bear that character, and becomes transformed into a cylinder, which constitutes in itself a different system of foundation. The upper lengths of the pile are formed slightly different from that carrying the screw, and are represented in elevation in Fig. 6358, and in plan in Fig. 6359. A is the cap which, after casting, is turned in a lathe to ensure a true bed for the girder to rest upon, and also to give a finish to the appearance of the pile. The average length of each separate casting is about 9 ft., some shorter lengths being always cast in addition to bring the pile up to the proper level, as it might in some situations be nearly impossible to get it down for another length of 9 ft., supposing the preceding length was below the proper level. Owing to the great length of the piles in comparison with their lateral dimensions, they require to be strongly braced together by diagonal ties and struts, so that they should form a complete framework of rigidity and lateral stiffness. This is accomplished by the braces D, which are of the section shown in Fig. 6360. They are connected to the piles by means of the wrought-iron rings C, which are fixed round their circumference, and are either riveted or bolted to the extremities of the braces. This arrangement is shown in plan in Fig. 6359. Flanges are cast upon the ends of the separate 9-ft. lengths, and they are thus bolted together, as at B in Fig. 6358. Of all the applications made of the principle of screw piling, the most extensive is that carried out upon the Bombay, Baroda, and Central India Railway. Upwards of six miles of bridges, in the aggregate, have been erected by their aid throughout the line. It may be

mentioned that the velocity of the floods in rivers similar to the Jumna and Nerbudda reached a maximum of ten miles an hour, with an average depth of fully 40 ft. The portion of the pile shown in Fig. 6358 is that which stands above the level of low water. That below that level, and also the part penetrating the bed of the river, has the flanges, by which the several lengths are bolted together, cast upon the interior instead of the exterior of the circumference, so as to present no impediment to the free descent of the pile through the ground. We have already mentioned that the diameter of the pile should not exceed certain limits, and it is equally apparent that it should also possess a dimension sufficiently large to allow of a man getting inside and bolting the different lengths together. Wherever the current acts in contrary directions, the piles must be strengthened by the addition of others, fixed in an oblique direction and tied to them at intervals by diagonal bracing. The general arrangement of this description of strutting is shown in the skeleton elevation in Fig. 6361, and it must be borne in mind that, in consequence of the variable nature of the strains, all the braces must be made of a section suitable for resisting both tension and compression. This is an important point to be attended to, for a diagonal bar that would solely resist a considerable strain of tension would be of little or no use if that strain were changed to one of the opposite character.

Screw piles are well adapted for obtaining a foundation in situations similar to that of a sand-bank, and where the usual means would be unavailable. They have also been much used in the erection of lighthouses.

A distinction must be drawn between screw piles, which we have just described, and which are known as disc piles. The latter are not actually screwed into the ground, but the earth is loosened below them, and an alternating motion being imparted to them, they gradually sink down. They are particularly adapted for getting good foundations in sand, which is loosened by forcing water or other fluid under a strong pressure into it, until it permits of the pile descending to a hard bottom. The disc pile has been successfully applied in several sandy localities by Brunlees, who was the first to introduce this peculiar method of sinking them.

The proper area of the screw should be determined by the nature of the ground into which it is inserted, which must be ascertained by experiment. The sizes used have exceeded 4 ft. in diameter, but the dimensions may be strictly said to be limited only by the power available for forcing them into the ground. The screw pile has been extensively used for moorings, and one of the early examples designed by Mitchell is shown in Fig. 6362. It was designed to hold the buoy-

6362.

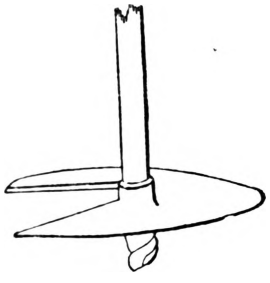

6363.

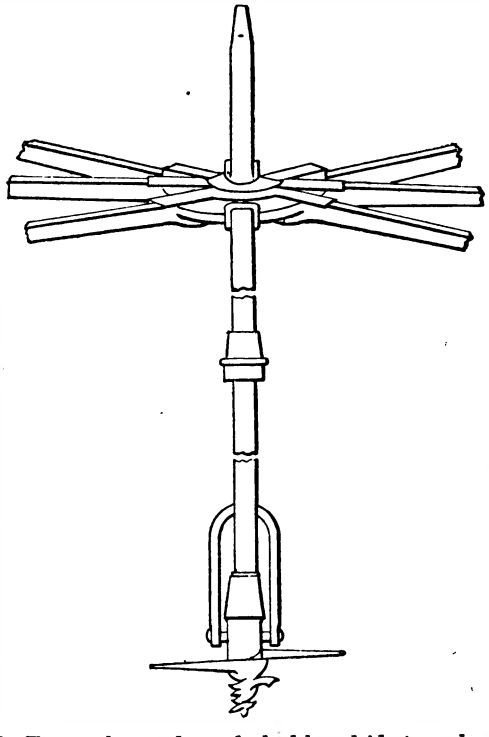

chain down. Before the mooring can be displaced by any direct force, a large mass of earth must be also displaced. The mass of earth thus disturbed is in the form of the frustum of a cone inverted, that is, with its base at the surface, the breadth of the base being in proportion to the tenacity of the ground. In the case of moorings, the base is subjected to a pressure of a cylinder of water equal to its diameter, the axis of which is its depth, and the water again bears the weight of a column of air of the diameter of the cylinder. The depth in the ground to which screw-pile moorings have been sunk varies from 8 to 18 ft. The former depth is sufficient where the soil is of a firm and unyielding description, and the latter depth is enough in a weak bottom.

In fixing these screw-pile moorings, barges, lighters, pontoons, and other similar means have been at different times employed. Two such vessels are lashed broadside to each other with a certain space between them, and moored over the desired spot. The screw-mooring is then lowered with the chain attached from the centre of the stage to the level of the water, and as it descends to the bottom, the lengths of the apparatus for screwing it into the ground are successively connected. This apparatus, represented in Fig. 6363, consists of a strong wrought-iron shaft in lengths of 10 ft. or 12 ft. each, connected with each other by key-joints or couplings, the lower end having a square socket to fit the head of the centre pin or axis of the mooring. When the centre-pin rests on the bottom, a capstan is firmly keyed upon the shaft at a convenient height. The men then shift the capstan-bars, and apply their power while travelling round upon the stage,

the capstan being lifted and again fixed as the mooring is screwed into the ground. The operation is continued until the men can no longer move the shaft round, or until it is considered to be screwed down to a sufficient depth. The instrument used in trying the nature of the ground was also employed in testing its holding power. It consisted of a jointed rod 30 ft. in length and 1¼ in. in diameter, having at the end a spiral flange of 6 in. in diameter. It was rotated by means of cross levers keyed upon the boring rod. Upon these levers, when the screw was sunk to the depth of 27 ft., a few boards were laid, forming a platform sufficiently large to hold twelve men. A bar was then driven into the bank at some distance, its top being brought to the same level as that of the boring rod. Twelve men were then placed upon the platform to ascertain if their weight, together with that of the apparatus—in all, about 1 ton—sufficed to depress the screw. After some time the men were removed, and the level was again applied, but no sensible depression of the screw could be observed. The inference to be drawn from this experiment is, that if a screw pile of 6 in. diameter can support a weight of 1 ton, a screw of 4 ft. in diameter will support 64 tons, since the area of their surfaces is as the square of 1 to 8.

In putting up a lighthouse on the coast of Arklow, in Ireland, where the site was unprotected, with an open sea of seventy miles in front, and a great surf of a considerable force incessantly beating on the shore, it was found impossible to use barges or any floating bodies in the construction of the works. As a steady footing for the men is to a certain extent essential, it was indispensable that the screwing down of the piles should be effected from the work itself. The method of construction was very cheap and simple. The piles were to be placed 17 ft. apart in a direct line outwards. A projecting stage was therefore rigged up extending that distance forward, with the other end temporarily supported by the solid part of the pier. The screw pile was then run forwards upon rollers, lifted by tackle, and placed vertically in the situation it was intended to occupy. A wheel 32 ft. in diameter, formed of capstan-bars lashed together at their ends, with a deeply-grooved end to each, was keyed upon the body of the pile, and an endless rope band was passed around it, and held in tension round a smaller grooved pulley fixed about 150 ft. back towards the shore. The tendency to pull the pile out of the vertical line was resisted by a guide-pole with a grooved pulley at its extremity, which pressed against the shore side of the pile.

These preparations having been made, a number of men by hauling in the endless band gave a rotary motion to the large wheel, and screwed the pile down to its place with ease. The same operation was repeated until the piles were all down. The bottom into which the piles were inserted consisted of an average depth of about 8 ft. of sand and gravel upon a firm blue clay. Screws of 2 ft. diameter were sufficient, with wrought-iron piles of 5 in. in diameter inserted in the ground to a depth varying from 12 to 15 ft. Screw piles can be got down easily to a depth of 15 ft. into sand in an hour and a half, whereas ordinary timber piles can scarcely be got down to a depth of 12 ft. with all precaution possible in the way of driving. It is stated that the screws penetrate clay with facility. Sand generally gives trouble, especially if there happen to be too many stones in it, but nearly every description of strata has been penetrated by them with the exception of absolute rock. By a modification of the screw it might be made capable of penetrating soft chalk, in which it would find a very good holding. Wrought-iron piles with large screws on them have been got down in sand to a depth of 19 ft. without any very great difficulty being encountered.

Instead of relying upon the supporting power derived from the extent of the frictional surface, a direct bearing surface may be obtained by the use of the screw and disc pile. Brunlees, instead of a single cylinder, employed in the Eau Brink Viaduct, near Lynn, for spans over 600 ft. a cluster of piles, as represented in Fig. 6364, varying in diameter according to the span. Those shown in Fig. 6364 were 18 in. in diameter, and the screw had a diameter of 3 ft. 6 in. The spans were 111 ft. The bearing surface for each pile was 8 3 sq. ft., or for five, the number under each girder 41·5 sq. ft. The metal in the piles, which were five in number, was equal to that of a cylinder of 4 ft. 4 in. in diameter, or a base of 14·2 sq. ft. By this plan three times the bearing is obtained with the same amount of metal, without taking into account the concrete or masonry, which is needed to protect a cylinder, none of which is required in the piles. The form of the piles must be varied to suit the strata it is intended to penetrate. For fine sands, such as were met with in piling for the Morecambe Bay viaducts and Southport pier, the disc form shown in Figs. 6365, 6366, was used. At the former work the piles were sunk by force-pumps, worked by a two-horse steam-engine, and at the latter by the head of water on the main pipes of the town supply. In both these instances the force of water removed the sand from under the disc, and the piles were gradually lowered as the sand was forced upwards. In the extension of Southport pier, the form shown in Figs. 6367, 6368, was successfully employed. The serrated edges or ribs were introduced as a

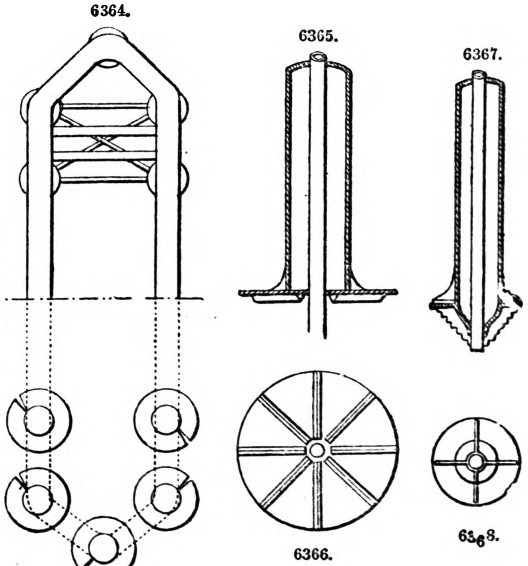

substitute for the cutters shown in Fig. 6364, in order to get through the hard bands of deposit very frequently met with in the sands. These piles were sunk by the aid of two ordinary fire-engines. Brunlees used the corkscrew form shown in Fig. 6369 for hard gravel, shale, and soft rock, which were met with in sinking the piers in the river Mersey. In alluvial deposits, both at home and abroad, the form represented in Fig. 6370, which is that of the ordinary bladed screw pile, was adopted. Out of seventeen river bridges in Brazil, fifteen of them were supported on piles of this shape. In one instance they were employed for a bridge of ten spans, in a depth of water from 35 to 40 ft.

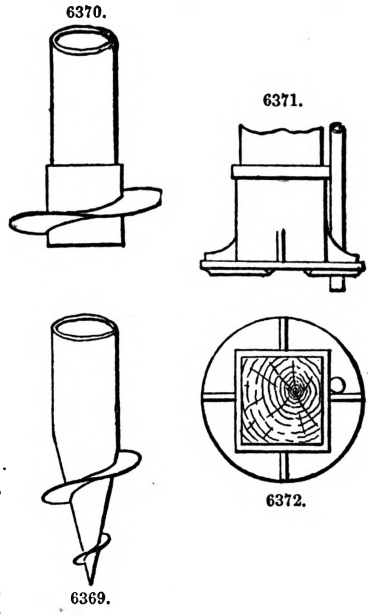

Brunlees has used over 3000 of the various kinds of piles shown in Figs. 6364 to 6372. He considers that for iron viaducts there are no foundations so weak that piles might not be adapted to them, provided only that the spans are kept within moderate limits, and the piles numerous and of moderate size, so as to diffuse the load as much as possible. For pure sand the disc pile is to be preferred, but in other situations Mitchell's screw pile will be found generally useful. Brick viaducts were screwed into position from a fixed staging in the usual manner. A disc was clamped tightly to the pile and capstan-bars attached to it. The power was applied by two double-purchase crabs, ropes being passed round the capstan-bars in connection with these crabs. Six men worked at each crab, four in winding and two hauling in the slack of the rope. The stratum penetrated in two of the piers had a thickness of 7 ft. of clay and marl, 2 ft. of hard gravel, and 9 ft. of strong clay, giving a total depth of 18 ft., to which the piles were screwed. The average rate of progress in the Eau Brink Viaduct, after a pile had been pitched into proper position, was 8 lineal feet a day. At the Solway Viaduct, where screw piles were abandoned, about twenty experimental corkscrew piles were screwed down to a depth of 8 or 9 ft. by horse power. Four levers of oak, bound round with hoop iron, each lever being 24 ft. long, were fitted into a disc on the pile, and the horses worked at the end of the lever. By this method a pile was got down to a depth of 8 or 9 ft. in a couple of hours. Although the material in this instance was so exceedingly hard as to cause the piles to be driven, the experiment proves that horse power can be effectually employed in screwing piles, where the sands of an estuary or banks of a tidal river are dry at low water.

In screwing down the piles on the bridges of the Midland Railway crossing the Avon, the piles were 2 ft. 6 in. in diameter, with a screw of 4 ft. 9 in. in diameter. They were screwed into place from fixed staging by means of an apparatus which consisted of a solid cast-iron hexagonal shaft, bolted on to the head of the pile to be screwed down. This shaft was passed through the centre of a cast-iron wheel having a diameter of 5 ft. A sufficient space was left between the sides of the shaft and the sides of the opening in the centre of the wheel, to allow for the gradual sinking of the pile. Teeth similar to those of a mitre-wheel were placed on the outer rim of this wheel. It was in fact a worm-wheel worked by a worm-screw fixed on a shaft, which was turned by handles very much like a common winch. At some of these bridges beds of thin shaly rock were met with, and were cut through by having a piece of pile 9 in. long cast on below the screw. This piece was cast with saw teeth at the bottom and with sharp ribs up its length, and these acted as cutters. By this plan rock of considerable hardness could be cut through, and if it were sufficiently compact, a hole 9 in. in depth and 18 in. in diameter was made, which formed a capital seat for the foot of the pile, and helped to keep it in position, the bottom of the screw resting on the top of the rock.

An ingenious method of using small screw piles for anchoring masses of brushwood for the purpose of regulating the course of rivers was observed in India by Goodwyn. The screw piles were about 7 ft. in length, as shown in Fig. 6373, and made of iron $\frac{7}{8}$ in. or 1 in. in diameter, the screw being $5\frac{1}{2}$ in. in diameter, formed of sheet iron $\frac{1}{8}$ in. in thickness, and with about 2 in. pitch. Each rod was pointed at the lower end and formed roughly into an eye at the top. The piles were screwed into their places with hardly any exertion of strength, by means of handspikes. This plan was tried with great success on the Ganges. It is something similar to the method practised by the Italians, and for the same purpose too. The name they bestow upon it is equivalent to what we should term elastic piling.

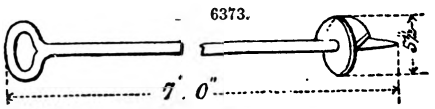

See Docks. Lights, Buoys, and Beacons.

PILLOW. Fr., *Grain*; Ger., *Zapfenlager*, or *Pfaune*; Ital., *Frustagno*; Span., *Almohada*.

In mechanics a piece of metal or wood introduced into machinery with a view to support some part of it to equalize the pressure, is called a pillow. See Pillow-block.

PILLOW-BLOCK Fr., *Grain d'un tourillon*; Ger., *Lagersitz*; Ital., *Sostegno*; Span., *Tejuelo*.

A pillow-block is a block or standard for supporting the end of a shaft. It is usually bolted to the frame or foundation of a machine, and is furnished with bearings of brass or wood for diminishing the friction of the shaft, and a movable cover or cap for tightening the bearings by means of screws; called also a journal-box, and a plumber-box.

PINION. Fr., *Pignon*, Ger., *Getriebe*, Ital., *Rocchetto*; Span., *Piñon*.

A smaller wheel with leaves or teeth working into the teeth of a larger wheel or a rack;

especially if such a wheel has its leaves formed of the substance of the arbor or spindle on which it turns; is called a pinion.

PIN-MAKING MACHINE. Fr., *Machine à faire les épingles*; Ger., *Maschine zur Fabrikation von Stecknadeln*; Ital., *Macchina da spilli*; Span., *Máquina para hacer alfileres.*

The ingenious machinery designed by T. and De G. Fowler, of Connecticut, U.S., for manufacturing pins, is illustrated by Figs. 6374 to 6381. Fig. 6374 is a plan of Fowlers' machine; Fig. 6375, side elevation; Fig. 6376, vertical longitudinal section; Fig. 6377, cross-section through the rolling bed; Fig. 6378, plan of the heading and cutting die and the rolling bed; Fig. 6379, plan of Fowlers' machine for finishing the pins; Fig. 6380, an elevation.

6374.

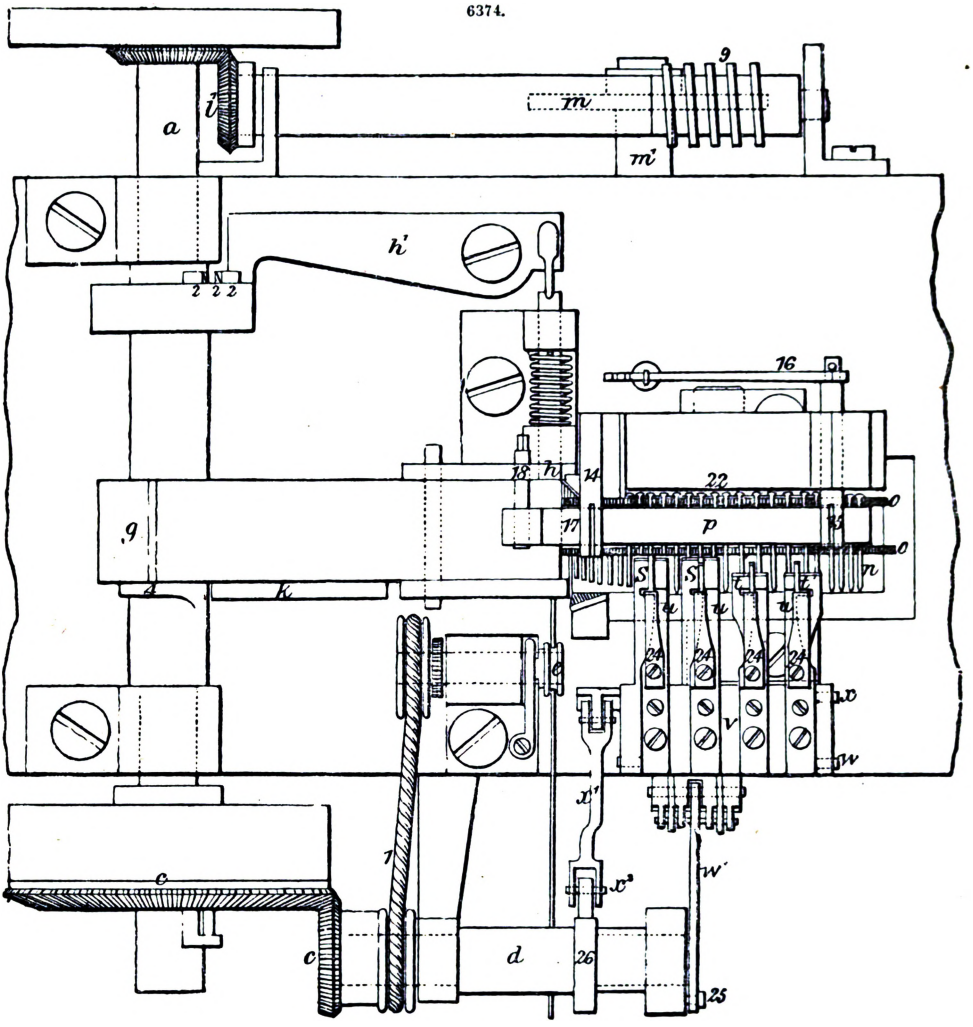

a is a shaft transmitting power, and sustained on the bed of the machine; *c*, , are bevel-gears driving the second shaft *d*, from which a belt 1 passes to the rollers *e*, *e*, that feed in the wire; these rollers are pressed together on to the wire by suitable springs, and continue to project the wire into the machine whenever opportunity is given for so doing by the heading jaws opening; when the jaws are closed, the rollers either slip on the wire, or the belt slips on the pulleys. The heading jaws *f*, *f*, are operated by the cam *g* on the main shaft *a*; and *h* is the heading die attached by the lever *h'* and cams 2, 2, 2. The wire passes into grooves between the jaws *f*, *f*, and is by them clamped at each blow of the header *h*, the jaws releasing the wire slightly between each blow, in consequence of the flat places in the cam *g*, so that the feed-rollers can move the wire slightly endways, as the head is formed by the successive blows. It was once the practice in pin making to open the jaws, cut off the pin, and force it out; this often causes the pin to jump out suddenly, and hence it does not pass properly into the next part of the machine; such action is prevented in Fowlers' machine by the finger *i*, kept down by a slight spring 3, and occupying a cavity formed for that purpose in the upper jaws *f*; the finger has a flaring notch, so that the pin wire can pass along in the groove of the jaw *f* beneath; and when the pin is cut off and passed out of the jaws, this finger presses lightly on the pin, and ensures its proper delivery by the cutter *k*. This cutter *k* is actuated by the cam 4, and drawn back by the spring 5. It has the cutting blade or end 7 acting to separate the wire, and with the projecting toe 8 carry the headed blank out of the jaws *f*, *f*, and deliver it into

the apparatus where the pointing is performed. *l* is a third shaft geared to *a* by mitre-wheels l^1; and 9 is a worm driving the wheel *m* on the cross-shaft m^1. This shaft m^1 has on it gears 10 and 11; the former connects to and drives the wheel and rolling bed *n* on the shaft 13. The rolling bed is composed of rings keyed or secured on to the shaft, and receiving between them the notched pin-wheels *o*, *o*, Fig. 6374; and these notched pin-wheels are driven by the gears 11. The size of the wheels 10, 11, is such that the surface of the rolling bed *n* travels twice as fast as the notches

6375.

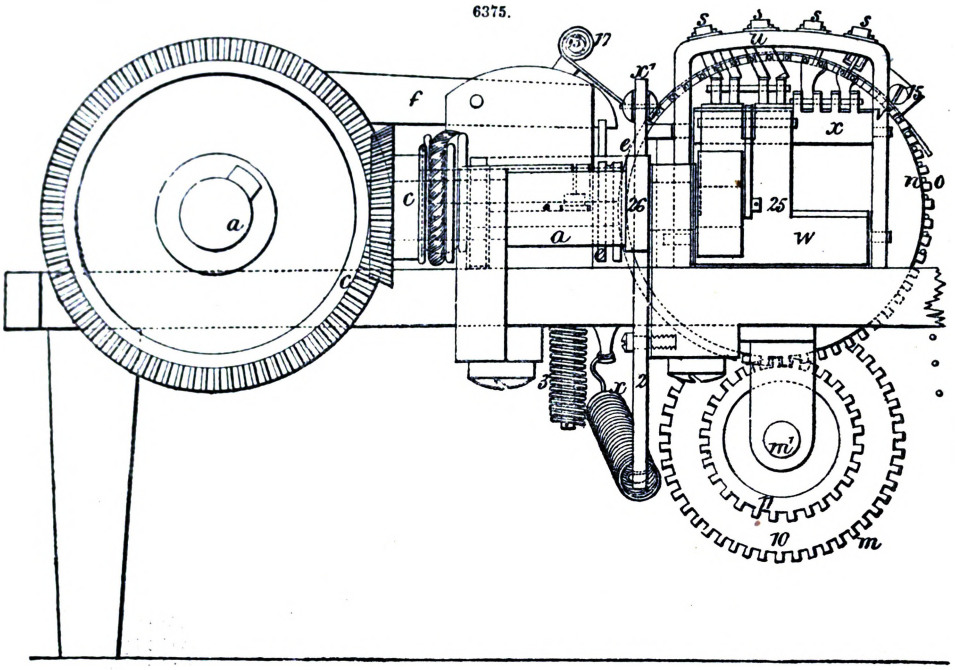

6376.

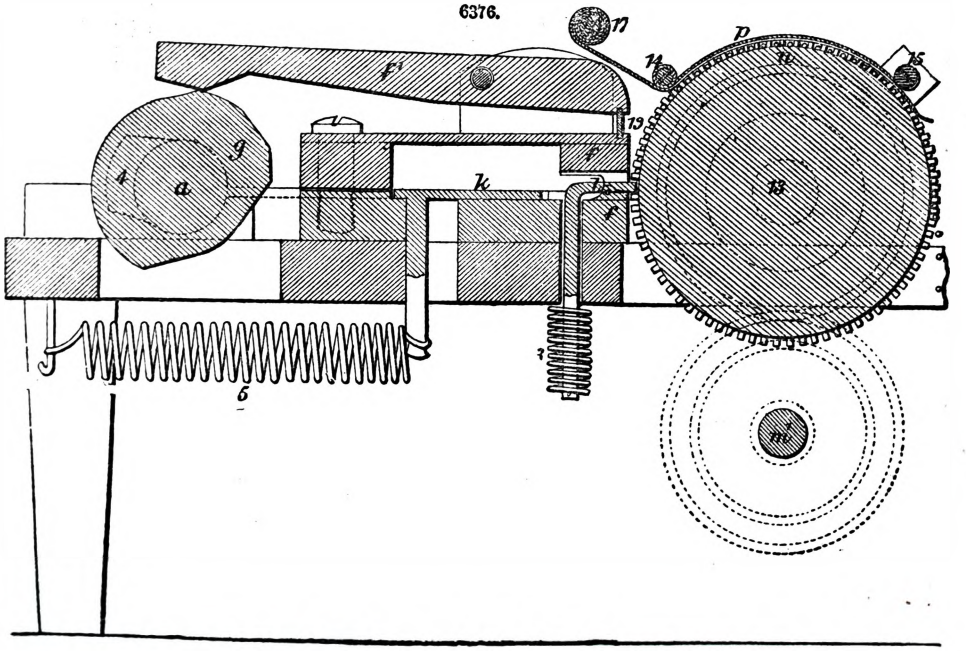

in the wheels *o*, *o*, so that each pin placed in the notches of *o*, by being delivered from the jaws, is rolled round constantly by the joint operation of the rolling bed *n*, notched pin-wheels *o*, *o*, and a resisting stationary surface *p*, formed by a strip of metal between two projecting arms 14, 15, the latter of which is fitted to turn, and provided with a lever 16 and weight or spring to keep the metallic strip towards the rolling bed, with the power and tension necessary to cause the pins to roll. 17 is a thin leather belt between the strip *p* and the pins to make a better bearing surface for the pins to roll against, and this belt is wound on a stud 18, by the turning of which the belt can

be drawn through under the strip *p* to bring a new piece of the belt to the proper place in case of one part wearing out.

The pins as delivered from the cutting and heading jaws into the notched wheels *o*, *o*, are by them carried up, and a shield 19, Fig. 6378, prevents their falling out, while an incline 20 slides them endways until the heads of the pins take the groove 21 in *n*; and shield 22, behind the heads, prevents the pins being moved endways as pointed. A small grooved compression-plate 23, extended from 22, presses on the pin-heads as they roll beneath it, and, by joint action with the groove 21, compresses and rolls down any slight burr or inequality in the heads. The pins after being pointed fall out into any suitable conductor or receptacle, or are removed from the notched wheels *o*, *o*, by a small stationary tongue of metal, and fall into a trough or receiver.

The device for pointing consists of several files or cutters; we have shown four, two of them

6377.

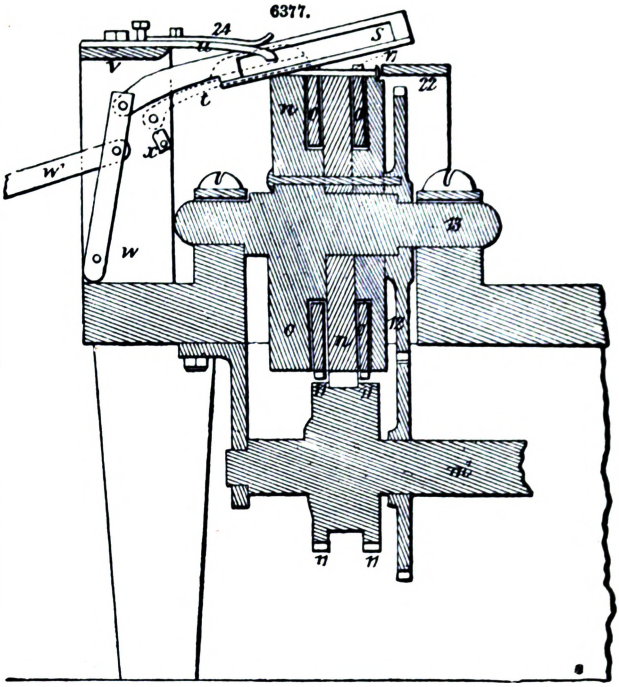

6379.

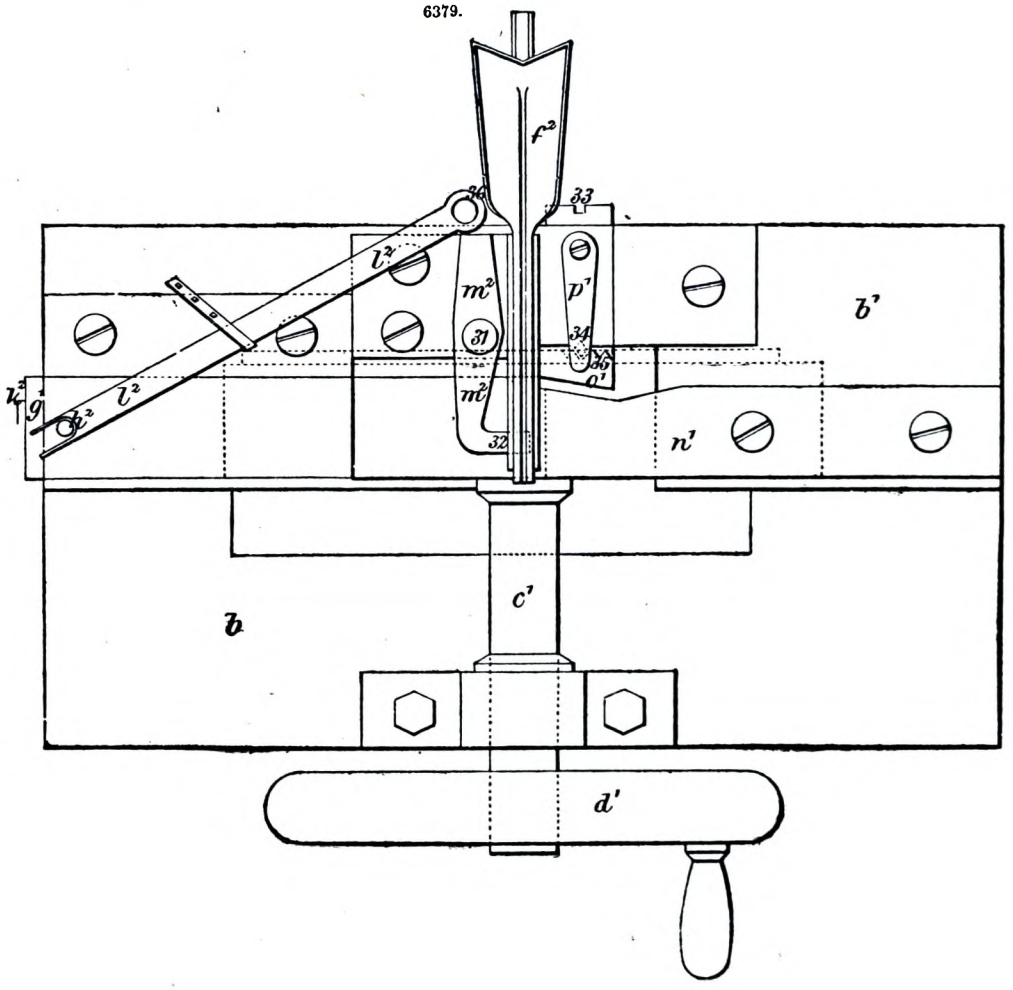

have a long sweep or movement for taking off the metal and shaping the point, the other two have a less movement, and are finer cutters to burnish and finish the points. Each of these cutters *s*, *s*, *t*, *t*, is formed with a slide on the upper part, working through an arm *u*, extending from the arch *v*, and springs 24 pressing the cutters down. The arms *u*, *u*, may be adjustable by set screws, so as to prevent the cutters touching the edge of the rolling bed *n*, or removing too much of the pin point.

6378.

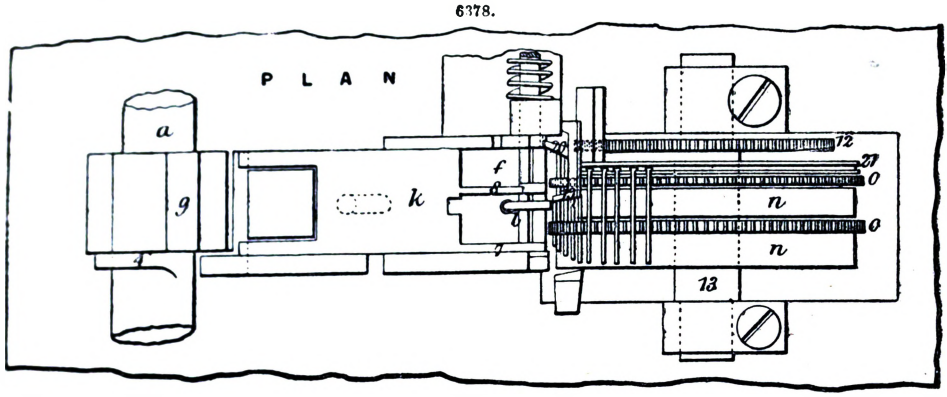

6380

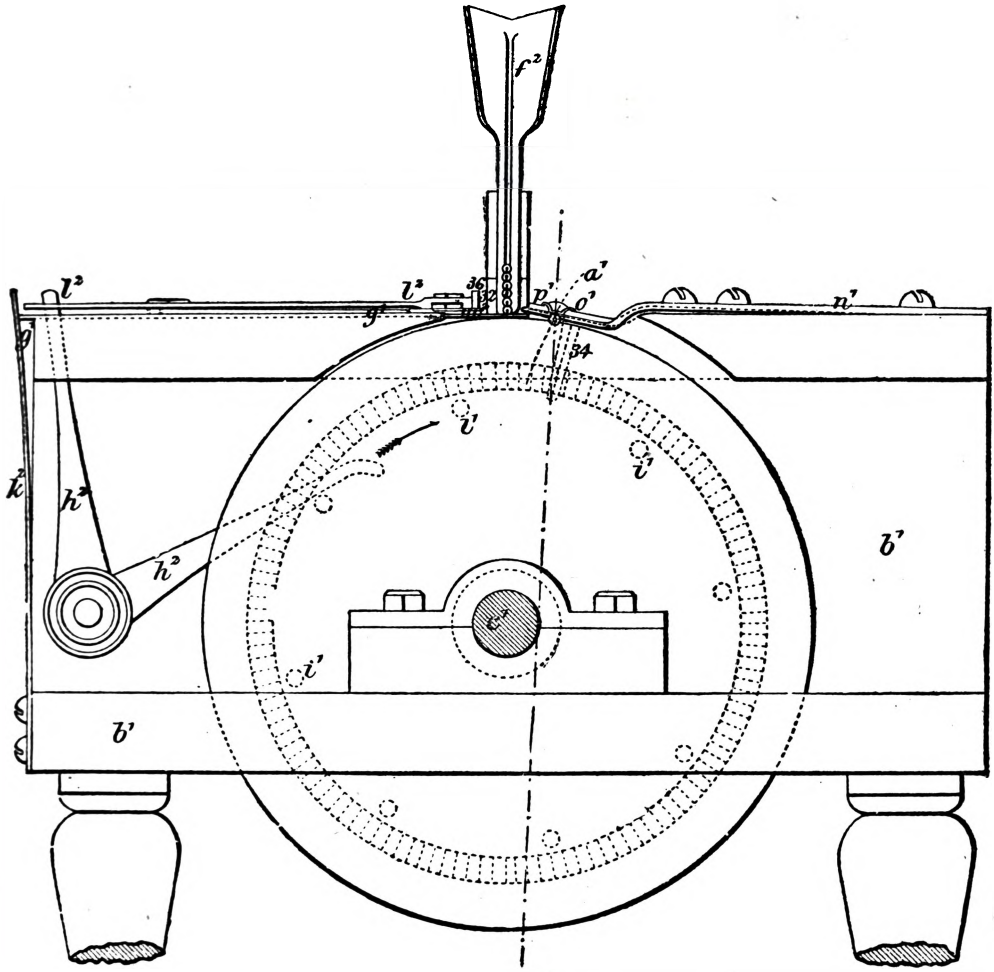

The cutters *s*, *s*, are reciprocated by the rock-shaft *w* and connecting rod w^1 to the crank-pin 25 on the end of the shaft *d*; and the cutters *t*, *t*, are reciprocated by the rock-shaft *x*, connecting rod x^1, and lever x^2, operated on by cam 26 on the shaft *d*. This cam, having three or more points, gives a short quick movement to the finishing cutters *t*, *t*, while the roughing cutters *s*, *s*, receive a longer and slower movement.

The stationary resisting surface p being curved to the rolling bed, a thin plate only need be used under tension, and thus but little space is occupied above the pin; cutters of any desired length can be used and made to vibrate freely over the points; this is of considerable importance, particularly in pointing iron pins. The movement given to the cutters from the rock-shaft w dresses the points in a convex curved form, the best shape for penetrating easily.

It will be seen that the pins roll under the cutters, and that these cutters, acting on the same side as the stationary resisting surface, do not interfere in the least with the pin rolling freely and revolving as it rolls.

The machinery above described is especially adapted to making pins out of iron wire; we therefore proceed to describe the mode of finishing such iron pins.

Pins were formerly formed of iron by the ordinary cutting, heading, and pointing machinery, and afterwards coated by boiling in tin, similar to brass pins; but the coating put on is so thin that the iron is liable to discolour and rust. When a thicker coating of tin is put on the pin by dipping the pins, or by any ordinary process for depositing such coating metal on the pins, they become very rough in their surface, so that they will not pass into or through any fabric with ease, because such coating exists on the surface in minute granules. If the pins after being thus coated are subjected to any of the known polishing operations, such as the revolving or shaking box, the inequalities of surface are not removed, and considerable power is required to stick the pin in the fabric, as well as giving an unpleasant sensation to the hand. Fowlers' machinery finishes the pins, when coated, by a rolling and compressing operation, in which the granules are crushed down to a perfect bevel, and the pin rendered smooth and uniform throughout its entire length. To accomplish this, they make use of a wheel e^1 mounted on a shaft c^1, that is sustained on a frame b^1, and rotated by the fly-wheel d^1, Figs. 6379, 6380. f^2 is the conductor on to which the pins are placed, whence they pass down the curved end of the conductor, and lie horizontally, as seen in Fig. 6381, which is a vertical section at the line a^1, a^1, Fig. 6379. From the conductor the pins are separated, one at a time, by the slide g^1, that is moved by the lever h^2, acted on by the pins i^1, i^1, at the back of the wheel e^1. k^2 is a spring to keep the lever h^2 towards the pin i^1; l^2 is a slide, acting on the levers m^2, set on the fulcrum 31, and formed with a chisel-shaped separator 32; 36 is a spring acting against the end of the lever m^2. p^1 presses a pin along from beneath the end of the conductor to be acted on, at which moment the separator 32 is drawn back, and the line of pins rests on the slide g^1. Now, as the slide g^1 draws back, the separator 32 passes above the lowest pin, sustaining the others above; while this lowest pin falls on the wheel e^1 as slide g^1 draws from under it. n^1 is a spring compressing plate, coinciding near its end with the shape of the edge of the wheel e^1. 37 is a screw, by which the spring compressing plate is kept towards e^1 with more or less power. The end of this plate n^1 is slightly bevelled, so that each pin is pressed in between the wheel e^1 and plate n^1. The revolution of the wheel e^1 rolls the pin around, and, both surfaces being very smooth, all the inequalities and roughness consequent on the tinning operation are rolled down, and a perfectly smooth and highly-finished pin is produced. The finished pin passes away from beneath the plate n^1 before another is entered, so that any slight inequality in size will not affect the perfect operation and uniformity of pressure on the pin. The point is finished up by the vibrating polisher o^1, kept on to the point by the spring p^1, and vibrated by the joint operation of the spring 33 and a series of teeth 35 around the back of the wheel e^1, acting on a stud 34 from the slide o^1.

6381.

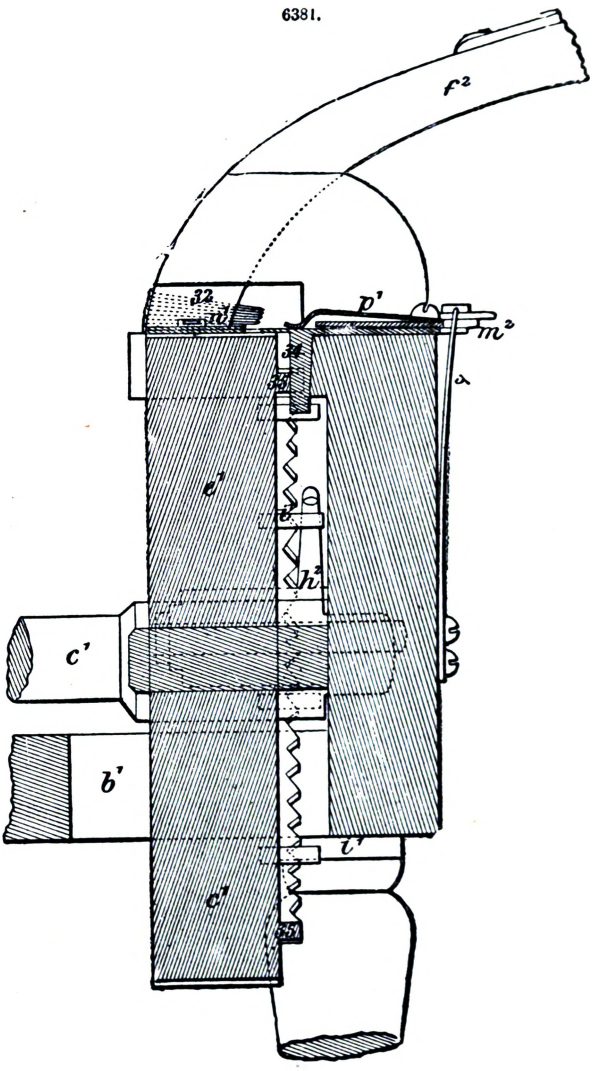

PIPES. Fr., *Tuyaux de conduite, Tubes;* Ger., *Röhren;* Ital., *Tubo;* Span., *Tubos.*

The advance of engineering science has raised the subject of pipes and piping into one of great importance. The improvements recently effected in the manufacture of these articles has vastly extended the field of their application, and it seems probable that the future will develop their use in a still higher degree. The ancients, as far as we are aware, made only a very limited use of pipes; though the Romans, many of whose works yet remain as monuments of their knowledge and skill in hydraulic engineering, carried their systems of town water-supply to a high degree of perfection, they everywhere preferred brick or stone conduits to the lead piping which alone they had at their disposal. Only in cases where no alternative remained did they resort to this latter mode of conveying more than very small quantities of water, and the extreme timidity with which they employed it in such cases, as shown by still existing works, testifies whence their reluctance proceeded. Nor was this timidity ill-founded. The material, as we have said, was lead, and the pipes were made of long strips by bending them upon a cylindrical object and joining the edges. Thus they were ill-adapted for the conveyance of water under pressure. The improvements of recent years, however, by which lead pipes are readily formed without a joint, have removed the latter source of insecurity, and rendered them applicable wherever the character of the material may be considered suitable. A far greater advance was the adoption of iron as the material of construction. The nature of iron being such that pipes may be made of it of any form and dimensions, and capable of withstanding any pressure, the difficulties that attended their employment in former times no longer exist. Hence the general substitution of a system of pipes for that of stone or brick conduits, as well as their application to numerous other important uses.

Another material, that of stoneware, has also assumed a rank of the highest importance for pipes designed for drainage purposes, and the degree of perfection to which their manufacture is now carried promises to develop their use still further.

Iron Pipes.—Both cast and wrought iron is extensively used in the manufacture of pipes; the former kind is, however, the more frequently employed, as water and gas pipes are made almost exclusively of that material. In some respects the nature of cast iron is more suitable for pipes to be used for those purposes than that of wrought iron. The tensile strength of the material is, in such cases, of less importance than its ability to withstand compression, for the weight of the earth pressing upon a water-main laid several feet beneath the surface is usually greater than the internal pressure of the water, while in the case of gas-pipes the strain is practically one of compression only. But a more important quality is its susceptibility of being moulded into any required shape, —a quality that renders it well adapted for the formation of pipes, varied forms of which are continually required.

The manufacture of cast-iron pipes is, however, attended with more difficulty than usually attaches to castings of a different character. The thickness of the metal being often no more than half an inch, any imperfection causes a serious diminution of strength, and this slight thickness increases the liability to imperfection. Cast iron is classed according to the amount of carbon in combination with the iron, and the proper admixture of the various kinds in the foundry is a matter of the highest importance. The different kinds of iron have different points of fusion and different rates of cooling; therefore, if a due admixture be not made, one portion will be fused before another, and consequently will be burnt before the remainder has been raised to its proper degree of heat; or one part becomes solidified while the other remains in a state of fusion, and hence the casting will contain within itself the elements of its own destruction, by being brought into a state of unequal tension, or, as it is technically termed, hide-bound. A hide-bound pipe is liable to be destroyed by a sudden and sometimes slight change of temperature, a cold rain being especially likely to cause fracture. Baldwin Latham mentions a case that came under his notice at Croydon, where a 12-in. main, $\frac{5}{8}$ in. thick, which, previously to its being laid, had been subjected to a pressure of 500 ft. head of water, burst in several parts with a pressure of only 150 ft. head, after a heavy rain followed by snow. Inquiries proved that these pipes had been hastily made, and had become hide-bound by being too rapidly cooled. Metal which has been reheated in the air-furnace has been found to possess a somewhat greater tensile strength than metal which has not been so reheated, and it is the practice of some manufacturers to repeat their castings for pipes in the same way. But more frequently they are cast direct from the blast furnace. No harm can result from this latter method if due care is taken. The experienced workman knows by the bloom upon the molten mass whether or not it is fit for a pipe-casting, and if unfit he pours it into pigs to be remelted with an admixture of other kinds in the air-furnace.

The presence of phosphorus in the iron renders it brittle and very liable to fracture; this quality is technically known as cold-short. Cold-short iron should never be used for pipes. The presence of arsenic, on the contrary, is said to improve the quality of the iron. It is, perhaps, scarcely necessary to state that castings for pipes must be kept free of scoria and air-bubbles. The presence of the latter may often be detected by sounding the pipe in every part with a hammer. Whenever an air-bubble is detected, or even if its presence is suspected, the pipe should be thrown aside as dangerous, if it is to be subjected to considerable pressure. To prevent air-bubbles remaining in the metal, pipes are often cast with a head, that is, with a mass of metal above that requisite for the pipe itself. This head compresses the mass below, and receives the air-bubbles which ascend into it. When the casting has cooled, the head is cut off. Pipes produced in this manner are stronger and much more trustworthy than those cast without a head.

Small pipes are usually cast horizontally, or inclined at an angle of 45°. When large pipes are cast in this position the cores have a tendency to float, and so to give a greater thickness on one side than the other. Moreover, pipes which have been cast horizontally are not so strong as those which have been cast vertically. The latter position should therefore be adopted for all but small pipes. The same defect of having a greater thickness on one side than the other may occur in pipes cast vertically if care is not taken to place the core truly concentric, or if it warps during the process of drying. In vertical castings the socket end of the pipe is usually placed downwards,

but this position may be reversed if required. It is important that all pipe-castings should be truly cylindrical, as otherwise the spigot ends will not fit the sockets. The thickness of a cast-iron pipe is determined as much by the nature of the material as by the strain to which it is to be subjected. Cast iron is slightly porous, and is liable to many and considerable defects in casting, especially when the metal is thin, as in the case of pipes. Therefore a sufficient thickness is always given by the founder to ensure a perfect casting. This thickness, except for very small pipes, is never less than $\frac{1}{2}$ in., and as a pipe $\frac{1}{2}$ in. thick is sufficiently strong to bear with safety any ordinary pressure, it may be stated that, for ordinary cases, any pipe is, with respect to its thickness, sufficient for the purpose required. When, however, the pressure is to be excessive, or when the pipe is to be subjected to shocks, the proper thickness must be found by calculation.

All pipes before being used should be tested by hydraulic pressure up to three or four times the head they will have to bear. They should also be carefully rung all over the surface with a hammer to detect the presence of air-bubbles. As to appearance, they should show on the outer surface a smooth, clear, and continuous skin. When broken, the surface of fracture should be of a light bluish-grey colour and close-grained texture, and both colour and texture should be uniform. It may be remarked, however, that the colour will be somewhat lighter, and the grain closer, near the skin, in consequence of the chilling which takes place there in casting. The iron should be soft enough to be slightly indented by a blow of a hammer on the edge.

In calculating the requisite thickness of a cast-iron pipe under given conditions, it must be borne in mind that, whatever care is taken, it is impossible to keep the core always perfectly central, and that, therefore, a pipe will have an excess of metal on one side, and a corresponding defect on the other. And as the strength of a pipe depends upon its weakest part, due allowance must be made for this defect. When all the imperfections to which a cast-iron pipe is liable are taken into consideration, it will be seen that, to obtain perfect security from accident, the factor of safety must be taken large. Many engineers take it at six, others at ten, the latter we think the most prudent course. The passage of heavy traffic along the roads, and the turning off of cocks, frequently bring a sudden strain upon a pipe, which the nature of its material is ill-adapted to bear. It is a common practice for engineers to calculate the weight of a pipe of the requisite thickness, and to specify the weight rather than the thickness, leaving the founder to fix that for himself, which long practice enables him to do with considerable precision. Absolute correctness, of course, cannot be obtained, and a margin of 1 lb. to an inch either way is usually allowed.

The resistance which a pipe offers to the internal pressure tending to burst it is equal to the cohesive strength of its two sides, and the effective area of that pressure is the internal diameter of the pipe. If the tensile strength of cast iron is taken as 15,000 lbs. to the square inch, the thickness of a pipe to be subjected to water-pressure will be given by the formula

$$\frac{\cdot 433\,H\,R}{15000} = \cdot 0000288\,H\,R,$$

in which H represents the head of water in feet, and R the radius of the pipe in inches. Substituting the diameter for the radius, the formula becomes $\cdot 0000144\,H\,D$. A pipe having this thickness is strained up to the bursting point. If we take ten as the factor of safety in accordance with the opinion expressed above, we have as the formula giving the requisite thickness in practice, $t = 000144\,H\,D$. Thus, suppose a 10-in. pipe to be subjected to a pressure of 200 ft. head. The requisite thickness, as given by the formula, is $\cdot 000144 \times 200 \times 10 = 288$ in. This is less than the necessary practical thickness to which we have alluded above, and therefore the least thickness that can be cast will possess an excess of strength in this case. If the head were 400 ft. the thickness would be $\cdot 000144 \times 400 \times 10 = \cdot 576$ in. In this case, the specified thickness would be $\frac{5}{8}$ in. Pipes are usually tested by hydraulic pressure up to twice their working pressure, and engineers frequently calculate the thickness from this head. But if the factor of safety is taken equal to ten, such a proceeding can hardly be considered justifiable.

Molesworth gives the following formula for finding the thickness of cast-iron pipes;—$t = 000054\,H\,D + x$, in which H and D have the same signification as above, and x is a constant quantity equalling ·37 in. for pipes less than 12 in. in diameter; ·50 in. for pipes from 12 to 30 in., and ·60 in. for pipes from 30 to 50 in. in diameter. The example given above, calculated by this formula, becomes $\cdot 000054 \times 400 \times 10 + 37 = 586$ in., a result nearly identical with that given by the first formula. The formula generally used by French engineers is $t = 0016nd + \cdot 008$, in which t = the thickness in fractions of a mètre, n = the effective pressure in atmospheres to the square mètre, and d = the diameter of the pipe. The constant quantity, 008 mètre, is the excess of thickness given to render the pipe capable of bearing a sudden shock. The water-pipes of Paris, as well as those of several other large towns of France, were calculated from this formula.

The weight of a cast-iron pipe may be found by multiplying the cubical contents in inches by ·26 lb., the weight of a cubic inch of cast iron; or the weight of a yard may be determined by the following formula; $W = 7 \cdot 35\,(D^2 - d^2)$, in which D represents the outside, and d the inside diameter in inches. The weight of two flanges is equal to about 1 ft. of pipe; the faucet adds from $\frac{1}{20}$ to $\frac{1}{10}$ of the weight of the pipe. The usual length of a cast-iron pipe, exclusive of the faucet, is 9 ft. Suppose now 10-in. pipes are required, capable of bearing safely a pressure of 400 ft. of water. We have shown that in this case the requisite thickness is $\frac{5}{8}$ in. The outer diameter will therefore be $11\frac{1}{4}$ in. Hence, the weight of the whole pipe will be

$$3 \times 7 \cdot 35\,(126 \cdot 56 - 100) + \frac{22 \cdot 05 \times 26 \cdot 56}{15} = 624 \text{ lbs.},$$

taking the weight of the faucet as $\frac{1}{15}$ that of the pipe. The weight specified to the founder will thus be 5 cwt. 2 qrs. 8 lbs. And allowing a margin of 1 lb. to the inch of diameter, the pipe delivered may weigh anything between 5 cwt. 1 qr. 26 lbs., and 5 cwt. 2 qrs. 18 lbs.

We come now to consider certain matters connected with the use of iron pipes; and first in importance among these is the resistance which their walls offer to the passage of water. In every system of town water-supply or drainage, the friction of the water in the long succession of pipes through which it is conveyed, causes a considerable diminution in the quantity discharged under a given head of pressure, and the extent of this diminution, or as it is usually termed, the loss of head, must be ascertained before the diameter of the pipe requisite to convey a certain volume of water can be determined. It has been found by experiment that this friction depends on the velocity of the water and the diameter of the pipe, and that it increases very rapidly with the velocity. The very elaborate experiments devised and carried out by M. Darcy have led to the establishment of formulæ which give the value of the friction with sufficient accuracy for practical purposes. Let A be the sectional area of a pipe, b its border or inner circumference, and l its length. Then lb is the frictional surface, and $\frac{A}{b}$ is the hydraulic mean depth, which, for cylindrical pipes running full, is obviously one-fourth of the diameter. Then $F = \frac{f\,l,}{\frac{1}{4}\,D}$, F being the friction between the water and the sides of the pipe, D its diameter, and f a coefficient, the value of which, as given by Darcy, is $005\left(1 + \frac{1}{48\,m\,(\text{feet})}\right)$, m being substituted for $\frac{1}{4}$ D. Usually, however, formulæ for the discharge of pipes or the requisite head of water are employed in which this friction is taken into account. The following are of this kind;—

$$G = \sqrt{\frac{(3\,d)^5 \times H}{L}}. \qquad H = \frac{G^2 \times L}{(3\,d)^5}, \qquad L = \frac{(3\,d)^5 \times H}{G^2}, \qquad d = \sqrt[5]{\frac{G^2 \times L}{H}} \div 3.$$

In which G = the discharge in gallons a minute, H = head of water in feet, L = length of pipe in yards, and d = diameter of pipe in inches. Thus, let it be required to find the discharge of a 6-in. pipe 2500 yds. long under a head of 50 ft. From the first formula we have

$$G = \sqrt{\frac{(18)^5 \times 50}{2500}} = \frac{5 \times \log. 18 + \log. 50 - \log. 2500}{2} = \log. 194{\cdot}4 \text{ gallons.}$$

Again, let it be required to find the diameter of a pipe 2500 yds. long, which, with a head of 50 ft., shall be capable of discharging 194·4 gallons a minute. From the fourth formula we have

$$d = \sqrt[5]{\frac{(194{\cdot}4)^2 \times 2500}{50}} \div 3 = \frac{2 \times \log. 194{\cdot}4 + \log. 2500 - \log. 50}{5} - \log. 3 = \log. 6 \text{ in.}$$

In a similar manner H and L may be found from the second and third formulæ. These formulæ are given by Thos. Box in his Practical Hydraulics, and the Tables given in that valuable little book were calculated from them. They give very accurate results, and are very convenient in practice. Other formulæ are, however, in common use. The following, for instance, known as Eytelwein's, is very generally employed;—

$$W = 4{\cdot}72\sqrt{\frac{D}{L}} \qquad D = 538\sqrt[5]{\frac{L\,W^2}{H}},$$

in which W is the discharge in cubic feet a minute, and L the length of pipe in feet, D and H having the same value as in the preceding. The foregoing example calculated by this formula becomes $\frac{5 \times \log. 6 + \log. 50 - \log. 7500}{2} + \log. 4{\cdot}72 = \log. 33{\cdot}98$ cub. ft. = 212 gallons a minute, or about 9 per cent. more than in the first case. Another formula known as Hawksley's is

$$G = \sqrt{\frac{(15\ D)^5\ H}{L}}, \text{ whence } D = \tfrac{1}{15}\sqrt[5]{\frac{G^2\,L}{H}},$$

G being the discharge in gallons an hour, and H, L, and D have the same signification as in the first case. With this formula the example becomes $\frac{5 \times \log. 90 + \log. 50 - \log. 2500}{2} = \log. 10869 = 181$ gallons a minute, or about 7 per cent. less than in the first case. Neville's general formula, from which many practical tables have been calculated, is as follows; $v = 140\sqrt{rs} - 11\sqrt[4]{rs}$, v being the velocity in feet a second, r the hydraulic mean depth in feet, and s the sign of the inclination, or the total fall divided by the total length. In cylindrical pipes the discharge in gallons a minute $= 293{\cdot}7286\,d^2\,v$, d being the diameter of the pipe in feet. Taking again the same example, we have

$$\log. 140 + \frac{\log. {\cdot}125 + \log. {\cdot}0066}{2} - \left(\log. 11 + \frac{\log. {\cdot}125 + \log. {\cdot}0066}{3}\right) + \log. {\cdot}25 + \log. 293{\cdot}7286$$

$= \log. 219{\cdot}3$ gallons a minute, or about 13 per cent. greater than in the first case. When the great length of pipe is taken into consideration, the difference in the results obtained by these several formulæ will be seen to be of little practical importance.

It must be remarked that the preceding formulæ apply only to clean pipes. Darcy's experiments showed that the effect of corrosion was to double the friction; consequently it will be necessary in the case of corroded pipes to double the head due to friction as found by the formulæ. A case is recorded as having occurred at Torquay, where a main about 14 miles long, composed of 14,267 yds.

of 10-in., 10,085 yds. of 9-in., and 170 yds. of 8-in. pipe, delivered only 317 gallons a minute with 465 ft. head. An ingenious scraper, worked by the pressure of the water, was passed several times through the pipes, the result being a discharge of 634 gallons. The best preservative for cast-iron pipes against corrosion is a coating of pitch, applied both inside and out, by a process which makes it penetrate the pores of the iron and adhere very firmly. Angus Smith's process of black enamelling has proved very efficacious. It can only be applied while the pipes are new and hot, and must consequently be done by the founder.

Besides the loss of head from friction, there is frequently another loss due to change of direction, caused by bends and angles in the pipes. When the bends are of large radius and are not numerous, their influence may be neglected, but angles and bends of a small radius occasion a considerable loss. The most convenient formulæ applicable to such cases are the following;—For knees, $H = \cdot0155\,V^2\,K$, and for bends $H = \cdot0155\,V^2\left(\frac{A}{180}\,L\right)$, in which H is the head of water in feet, V the velocity of the water in feet a second, A the angle of bend or knee with forward line of direction, and K and L are coefficients for angles of knees and curvature of bends respectively. The values of K for angles of 20°, 40°, 60°, 80°, 90°, 100°, and 120°, are respectively 046, ·139, ·364, ·74, ·93, 1·26, and 1·86. The values of L when the ratios of the radius of the centre line of bend to radius of bore are 1, 2, 3, ·4, ·5, ·6, ·7, ·8, 9, 1 0, are respectively 131, ·138, ·158, ·206, 294, ·44, 66, 98 1·4, and 2 0. Weisbach's formula for the resistance of bends is, $R = \frac{\theta}{\pi}\left\{0\ 131 + 1\cdot847\left(\frac{d}{2r}\right)^{\frac{7}{2}}\right\}$, and for knees $R = 0\cdot946\sin.^2\frac{\theta}{2} + 2\ 05\sin.^4\frac{\theta}{2}$, in which d is the diameter of the pipe, r the radius of curvature of its centre line at the bend, θ the angle through which it is bent, and π two right angles. The first of these formulæ may be modified into the following; $H = \left\{0\cdot131 + 1\ 847 \times \left(\frac{r}{R}\right)^{\frac{7}{2}}\right\} \times \frac{V^2 \times \theta}{960}$, in which H represents the head in inches, due to the change of direction, r the radius of the bore of the pipe in inches, R the radius of curvature of the centre line of the bend in inches, and V the velocity of discharge in feet a second.

To the head due to friction and to the resistance offered by bends, there yet remains to add the head due to the velocity of entry. In long mains this quantity is so small a proportion of that due to friction that it may be neglected without sensible error; but in short pipes it may be much greater than the head due to friction, and therefore in such cases it cannot, of course, be neglected. This head may be found by the formula $H = \left(\frac{G}{d^2 \times 13}\right)^2$, in which H is the head in feet, d the diameter of the pipe, and G the discharge in gallons a minute. Thus it will be seen that the total head consists of three parts, that due to friction, that occasioned by the changes of direction, and that due to the velocity at entry.

A long main is usually composed of pipes of different sizes, and in computing the discharge of such mains, the head for each must be separately calculated, and the total sum taken. Suppose, for example, we have a main consisting of 500 yds. of 8-in., 200 yds. of 7-in., and 100 yds. of 6-in. pipes, through which it is required to discharge 200 gallons a minute. For the friction of the 8-in. pipe we require a head of 2·50 ft., for that of the 7-in. a head of 1·96 ft., and for that of the 6-in. a head of 2·10 ft. The total head requisite for the whole main is $2\ 50 + 1\cdot96 + 2\cdot10 = 6\cdot56$ ft. To this must be added the head due to the velocity of entry, and, if there are bends, that due to changes of direction.

When it is required to determine the discharge through such a series of pipes with a given head, the case does not admit of a direct solution, because we do not know beforehand in what proportions the given head is to be divided among the different pipes. We must therefore, in such cases, apply the general law that *the discharge of any pipe, or series of pipes, is proportional to the square root of the head*, and, conversely, *the head is proportional to the square of the discharge*. For example, suppose in the above case we have a head of 10 ft., and it is required to determine the discharge. Assume a discharge of, say, 200 gallons a minute. It matters not whether the assumed discharge is near the truth or not. The sum of the heads required is, as we have seen, 6·56 ft., and we will suppose the head due to velocity of entry and changes of direction to be ·19 ft. The total head will thus be 6 75 ft. Then by applying the above general law we have $\frac{\sqrt{10} \times 200}{\sqrt{6\cdot75}} = 243$ gallons, the actual discharge.

The sizes of street service-pipes for a town water-supply are not calculated by the methods applied to the mains. It has been found by experience that a certain size lead pipe is necessary for a house containing a given number of rooms. For an intermittent supply, the usual sizes are ½-in. pipe for a house with 7 rooms, ⅝-in. for 10 rooms, ¾-in. for 16 rooms, and 1-in. for 25 rooms. The number of service-pipes which a main of a given diameter is capable of supplying is known from the general law, that when the head and length are constant, the discharge is directly as the 2·5 power of the diameter. Thus $4^{2\cdot5} = 32$, and therefore we may admit that a 4-in. main is capable of supplying 32 1-in. service-pipes. All distributing pipes must be adapted to the greatest hourly demand, and to the requisite head in the streets. The total length required is about a mile to every 2000 inhabitants. Service-pipes should, whenever practicable, be connected at both ends with mains so as to have as few dead ends as possible. When the diameters of the principal mains have been computed by the proper formula, those of the branch mains may be easily deduced from them by the rule that, with equal virtual declivities, the diameters of pipes are to be proportional to the squares of the fifth roots of the quantities of water they are to convey.

If a number of open-topped pipes were inserted at various points along a main, the level of the water in these pipes would mark the line of virtual declivity, or, as it is frequently termed, the hydraulic mean gradient. This line of virtual declivity commences at a point in the reservoir

vertically above the mouth-piece of the pipe, at a depth below the top water equal to the loss of head due to the velocity of flow in the pipes and the friction of the mouth-piece. The mode of determining it is to calculate the loss of head for a series of points in the course of a pipe, and having determined it, care must be taken in laying out the levels that no portion of the pipe be above this line. The reason for this is, that at all points in the pipe situate above the line of virtual declivity the pressure is less than that of the atmosphere; in other words, a partial vacuum is formed. And as water contains a certain quantity of air, the latter would disengage itself from the water and accumulate at these points. A pipe in such conditions is called a siphon, and unless means are provided for getting rid of the accumulations of air, it is incapable of conveying water.

The joints in pipes are usually made either by means of flanges or by spigot and socket. The former of these methods is always used for pumps, and usually whenever water-pipes have to be set vertically. It is also well adapted for joints that are required to be frequently loosened. India-rubber rings form the most convenient kind of joint for flange-pipes. Spigot and socket joints are generally used for water and gas pipes, for besides being more economical than the flange, they possess the advantage of allowing a departure from the strictly straight line by slightly enlarging the diameter of the socket. When the plain end is made to fit the faucet or socket exactly, the joint is made water-tight by means of red-lead paint; in such cases, no deviation from the straight line is admissible. When the spigot and socket are made to fit loosely, the joint is run with lead; and if the socket is made sufficiently large, considerable deviation may be obtained. It must, however, be borne in mind that a good joint cannot be made if the socket is much larger than the spigot. The following Table of the proportions of joints for cast-iron pipes, taken from Box's Practical Hydraulics, shows the most approved practice in these points;—

Diameter of Pipe in inches.	Depth of Socket.	Lead Joints.			Laying a Yard, Prime Cost.	
		Thickness.	Depth.	Weight in lbs.		
	inches	inches.	inches.		*s.*	*d.*
1½	3	¼	1½	1·2	0	11
2	3	¼	1½	1·4	1	0
2½	3½	¼	1½	1·6	1	1
3	3½	¼	1¾	2·3	1	2
4	4	5/16	2	4·0	1	3
5	4	5/16	2	5·0	1	5
6	4¼	5/16	2¼	6·5	1	7
7	4¼	5/16	2¼	7·7	1	10
8	4¼	5/16	2¼	8·2	2	1
9	4½	5/16	2½	10·4	2	6
10	4½	5/16	2½	11 5	3	4
12	4½	⅜	2¾	18·0	4	6

This cost, which includes excavating the ground and making good the same, will of course vary with the nature of the ground and the price of labour, and is only given for the sake of comparison.

When a joint in a pipe has been made, it is liable to fracture from the settling of the ground. To prevent this, care should be taken to form a good foundation, and to make the pipe bear from end to end. When the ground sinks beneath a joint, that and the next two, one on each side, must necessarily be broken, and the slightest subsidence is sufficient to cause this rupture, since the whole weight of the pipes, with that of the superincumbent earth, is brought to bear upon the joints. If the ground settles down between two joints only, the subsidence of the earth above the pipe tends to rotate the latter, and so to rupture the joint. The same effect is of course produced if the pipe bears only at the ends. A joint may also be broken by the careless filling-in and ramming of the earth, or by the weight of the workmen before a sufficient depth of earth has been laid upon the pipe to destroy the shock of walking. Attention is usually paid to these matters in the case of stoneware pipes and clay joints; but when the pipes are iron and the joints lead, they appear to be supposed capable of withstanding any possible strain or shock. The fact is, however, that a lead joint is very easily ruptured. It is extremely probable from the manner in which water-pipes are laid that a vast number of the joints leak, thus causing a great loss of water in the case of a town supply. Water will not show itself on the surface of the ground unless the upward is the easiest direction, and in two cases out of three it will not be so. The loss, therefore, goes on unperceived. In support of these assertions, we may quote certain facts laid before the American Society of Civil Engineers at New York, on the 19th of March, 1873. Joseph Whitney, of Cambridge, Mass., in a paper on Leakages in Pipes, referred to the great and growing increase in the consumption of water. Rarely is a report of water-works issued which does not refer to this increase as something remarkable, and, at the same time, unaccountable. Whitney's attention was called to this subject at Cambridge, where, for three years preceding, the water-pressure had been growing less, causing much inconvenience and insecurity in case of fire. This was ascribed to the great number of users from one main, an 8-in. pipe. In a particular house the water scarcely rose to the second story, either during the day or at night. After inquiry, a series of observations were made with siphon-pipe and pressure-gauge, for the purpose of determining the cause. These observations were made in the morning when the consumption was nearly nothing; and in one case, by shutting off certain sections from the main—say, a 4-in. or a 6-in. pipe—a large leak was revealed where the pipe, laid in a street filled with oyster-shells, had parted. In another case, when the gate was closed, the water in the siphon at once rose 16 ft., equal to about two stories of an ordinary house. The pipe, about 600 ft. long, and laid upon marshy ground, was examined, and the leak found in a joint, where the two parts had been entirely separated by a settlement of one section. These and other leaks which were detected by

similar means were closed, and thus, without any increase of size in the mains, an additional head of 35 ft. was secured, amply sufficient to give a full supply to every house in the locality. Observations were then made upon the reservoir during the night, and as there was evidence of still existing leakage, further experiments were undertaken upon the pipes throughout the city. The result of these experiments was the discovery of no fewer than *two hundred leaks of from one to two thousand gallons an hour each.* The necessary repairs were made, and thereby the average daily consumption was reduced from 85 to 35 gallons a head. It is probable that this state of things exists in other cities than Cambridge, and it may furnish a sufficient reason for the great increase in the consumption of water which more or less embarrasses public authorities.

In gas-pipes, the pressure being of no importance, the thickness of metal is determined by the exigencies of founding alone. The diameter, however, as in the case of water-pipes, is determined by the volume of fluid to be passed in a given time. The following formulæ give the volume and the diameter; $Q = 1000\sqrt{\frac{D^5 H}{G L}}$, and $D = \cdot 063\sqrt[5]{\frac{Q^2 G L}{H}}$, in which Q represents the quantity of gas in cubic feet an hour, L the length of the pipe, D the diameter of the pipe in inches, H the head of water-pressure in inches, and G the specific gravity of gas. For ordinary calculations, G may be assumed = ·45, and H = ½ in. to 1 in. A public lamp consumes 5 cub. ft. of gas an hour; and it has been found by experience that two lamps 40 ft. from main require ⅜-in. bore of pipe, and four lamps at the same distance require ½-in. bore. At a distance of 50 ft. six lamps require a pipe of ⅝-in. bore, and at 100 ft. distant, ten lamps must be supplied with a ¾-in. pipe. The preceding remarks relative to the laying of water-pipes apply equally to gas-pipes.

Pipes that are to be subjected to great internal pressure should be of wrought iron, especially where weight of metal is an important consideration. The tenacity of wrought iron being three times that of cast, the formula $\frac{433\,H\,R}{15000}$ will become $\frac{\cdot 433\,H\,R}{45000} = \cdot 0000096\,H\,R$, and as the factor of safety may be taken at six instead of ten, as in the case of cast iron, we have ·0000576 H R, or ·0000288 H D. Moreover, there are no limits to the thickness of wrought-iron pipes imposed by the processes of manufacture, so that the requisite thickness may be always obtained. To make the above formula general, let P represent the pressure in pounds to the square inch, and F the tenacity of the metal; then the safe thickness $T = \frac{6\,P\,R}{F}$. Wrought iron is also used for pipes of very small bores, as, for instance, small service-pipes for water and gas. When used for these purposes, wrought-iron pipes are much cheaper than lead, and, from a hygienic point of view, vastly superior to the latter for water-supply. They are, however, not so easily fixed as lead, because, to be bent to any requisite angle, they must be heated in a forge, while lead can be beaten cold. This is probably the reason why lead continues to be almost exclusively employed inside a house, in spite of its unwholesome properties, though iron is almost exclusively used outside. The manufacture of wrought-iron pipes is quite of recent origin, but it is now a very extensive branch of industry, especially at Birmingham. They are made by passing plates of iron at welding heat through rollers specially constructed for the purpose. In this way, pipes are produced perfectly true, with a sound longitudinal joint, and of almost any required strength. It is no uncommon thing to test pipes thus manufactured for steam purposes up to 3000 lbs. pressure to the square inch. Pipes of large diameter, made of sheet iron and coated with pitch, have been used in France as mains for a town water-supply.

Lead Pipes.—We have stated above that lead pipe is almost exclusively employed inside of houses. The quantity used in this way is very great, and hence this branch of manufacture is one of very great importance. The perfection to which the manufacture of lead piping has been carried of late years by the aid of hydraulic machinery is one of the most striking features of the industry of the present day. The ancients, as we have seen, formed their pipes of strips of lead by joining the edges. With the machinery in use, lead pipes are produced without a joint by forcing them out of solid lead. Fig. 6382 represents an hydraulic press as applied to this purpose. The press P Q consists of a massive iron cylinder and a piston B C. This piston or plunger is narrowed at the end and turned, so as to fit tightly into a very strong iron cylinder G H. In the bottom of this cylinder is a hole O, which is carefully turned to the exact external size of the pipe to be produced. At E is a small arch from the top of which a mandrel descends down through the hole. This mandrel is exactly the internal diameter of the pipe. The charge of from 2 to 4 cwt. of molten lead is poured into the space D. and left to solidify. Round the cylinder G H is another cylinder K L of larger diameter, and between these cylinders a fire is kept up for the purpose of preserving the lead at the proper temperature. When this temperature has been reached by the cooling of the molten mass, pressure is applied to the plunger, which descends with great force. The lead is thus forced between the cylindrical hole and the mandrel, like a lump of putty under ordinary pressure, and it issues at the bottom as one continuous pipe. It will be at once seen that an immense length of ordinary pipe is obtainable, without joint, by this process. In practice, however, it is usual to cut the pipe off in lengths of 60 ft. for convenience of stowage and transport. A remarkable fact in this process is that the solid lead which is divided by the arch E joins again below the arch under the influence of the hydraulic pressure without leaving any trace of the division it has undergone.

6382.

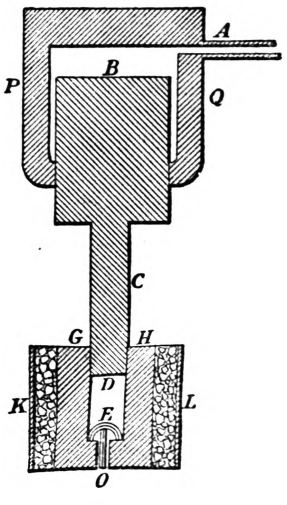

Previous to the discovery of this fact, the mandrel was fixed directly into the plunger C, so as to avoid the difficulty of the arch. The latter, being a more convenient arrangement, is now generally adopted.

The tensile strength of lead may be taken as 2745 lbs. to the inch. The thickness of metal to withstand water-pressure is therefore given by the formula $T = \frac{\cdot 433\,H\,R}{2745}$. This thickness should be multiplied by a factor of safety, which, in ordinary cases, may be taken as ten. The weight of lead pipe is found by the formula already given for cast iron, by taking $K = 3 \cdot 86$, namely, $K(D^2 - d^2)$. The diameter is determined by the quantity to be delivered in a given time under a given head of pressure. In the case of an intermittent water-supply, the diameter should be sufficient to fill the cistern in a space of time considera ly less than the hours during which the water is on.

The action of some kinds of water upon lead pipes is very destructive. This is especially the case with soft water, as calcareous matter stops corrosion at a certain point by forming an insoluble coating. A recent invention provides effectually against the corrosive action of soft water on lead pipes. This is Haine's lead-encased block-tin pipe. By Haine's process, which is similar in its details to that described above, pipes may be manufactured with an inner casing of tin, and the process of manufacture is so perfect that it may be bent and otherwise manipulated with the same facility as lead. These pipes are greatly superior to lead from a sanitary point of view, and they possess considerably greater strength. Experiments to test their quality in this latter respect were made in July, 1871, by means of Kirkaldy's t sting machine, the result being that Haine's ½-in. pipe, weighing 4·917 lbs. a yard, burst with a pressure of 1859 lbs. to the inch, while a ½-in. common lead, weighing 7·139 lbs., burst with 1579 lbs. pressure. Also, a Haine's 2-in. pipe, weighing 16·406 lbs., burst with a pressure of 642 lbs. to the inch. A common 2-in. lead pipe, weighing 27·967 lbs., has burst with a pressure of 498 lbs. Thus, strength for strength, this kind of pipe is not more expensive than the common kind, while its hygienic advantages render it greatly superior for purposes of water-supply.

Stoneware Pipes.—The materials of which stoneware pipes are made vary with the district in which they are produced, and hence these kinds of pipe are of various qualities, and possess various characteristics. In Staffordshire, for instance, they are burnt from a species of fire-clay, and are dark in colour, being similar in character to the Staffordshire bricks. In London, they are made of clay obtained from various parts, with an admixture of broken pottery finely ground and sifted, while in some parts of Kent gault-clay is chiefly used, producing a pipe light in colour and of very tough consistency. Fire-clay pipes are usually classed distinct from stoneware, and, thickness for thickness, are generally considered as somewhat inferior to the latter in strength. Whatever is the nature of the materials employed, however, they must possess certain qualities. The most important of these qualities, probably, is that of impermeability. If a drain-pipe is made of porous material, it will not long resist the influences that will be brought to act upon it,—such as, for example, the crystallization of water in time of frost, or the formation of crystals in the presence of certain chemical compounds, which are pretty sure to exist in sewage. Moreover, when a pipe becomes saturated with moisture, it is incapable of supporting a great superincumbent weight, and therefore, when laid at a considerable depth beneath the surface, deformation and fracture are likely to occur. To be impervious to moisture, the material should be vitreous in character, having sufficient toughness to resist shocks, tenacious, hard, and homogeneous. Pipes should be burned at a high temperature; they should be uniformly glazed inside and out, and be free from fire-cracks; they should ring clearly when struck, and be uniform in thickness and section. They may be tested for impermeability by drying them till they cease to lose weight, and then placing them in water for twenty-four hours. By reweighing them after they have been carefully wiped, the quantity of water absorbed may be clearly ascertained. This quantity should not exceed 5 or 6 per cent. of the weight of the pipe.

The tensile strength of stoneware pipe varies greatly. Experiments made by Baldwin Latham showed that it might vary from 21·4 lbs. to 429·5 lbs. to the square inch of section. Thus, the thickness requisite for a stoneware pipe is a question to be determined by experience rather than by calculation. When first used for town sewage, they were made insufficiently thick, and hence they failed in many instances, notably at Croydon. But in these cases the failure was due to the inability of the pipes to resist a strain of compression rather than a tensile strain. This indeed is the principal strain brought upon a sewage pipe, and it may be safely assumed that if a pipe is capable of bearing the crushing force brought to bear upon it when laid, it is abundantly capable of withstanding any internal pressure to which it is likely to be subjected. Numerous experiments carried on under the direction of J. W. Bazalgette, showed that the ability of stoneware pipes to resist a crushing force is much less variable than their tensile strength.

The following Table shows the dimensions and thickness now given to stoneware and fire-clay pipes;—

Stoneware.				Fire-clay.			
Internal Diameter.	Thickness.	Length in Work.	Depth of Socket.	Internal Diameter.	Thickness.	Length in Work.	Depth of Socket.
inches.	inches.	feet.	inches.	inches.	inches.	feet.	inches.
3	$\frac{5}{8}$	2	$1\frac{1}{2}$	3	$\frac{3}{8}$	2	$1\frac{1}{2}$
4	$\frac{1}{2}$	2	$1\frac{1}{2}$	4	$\frac{1}{2}$	2	$1\frac{1}{2}$
6	$\frac{5}{8}$	2	$1\frac{3}{4}$	6	$\frac{3}{4}$	2	$1\frac{3}{4}$
9	$\frac{3}{4}$	2	2	9	$\frac{4}{5}$	2	2
10	$\frac{7}{8}$	2	2	10	1	2	2
12	1	2	2	12	$1\frac{1}{10}$	2	2
15	$1\frac{1}{8}$	2	$2\frac{1}{4}$	15	$1\frac{1}{4}$	2 to 3	$2\frac{1}{4}$
18	$1\frac{1}{4}$	2 to 3	$2\frac{1}{2}$	18	$1\frac{1}{2}$	2 to 3	$2\frac{1}{2}$

The usual form of sewer-pipe is the plain spigot and socket. The objection to this kind is the difficulty of opening them for examination. To remove this difficulty several modifications have been from time to time introduced. Fig. 6383 represents one of these, in which the upper half of the socket is absent. The object of this arrangement is to allow a single length to be removed and another dropped into its place, without deranging the adjacent pipes. Another form of pipe, known as Jennings' pipe, from the name of the inventor, is shown in Fig. 6384. The inventor in his description says,—"They are plain at both ends, and are laid in chairs similar to the metals of a railway, each pipe being kept 6, 9, or 12 in. apart, according to their diameter. The pipes being bedded in the chairs renders the disturbance of ground under the pipes to make the joints (as at present) unnecessary, and the top part of the chair (which for distinction is called a saddle-piece) being the last fixed, enables the workman and superintendent to see that the pipes are properly laid and fairly jointed. In case of stoppage the saddle is easily removed without in any way disturbing the invert or general drain; and the pipes being some distance apart, the state of the drainage can be easily ascertained." Various other arrangements have been introduced for the purpose of facilitating inspection; but they are all open to the objection that they either weaken the pipe or increase the tendency to leak when running more than half full. Since the introduction of the mode of laying sewers in straight lines on plan, with man-holes or lamp-holes at every change of inclination or direction, the necessity for these kinds of pipe has ceased.

6383.

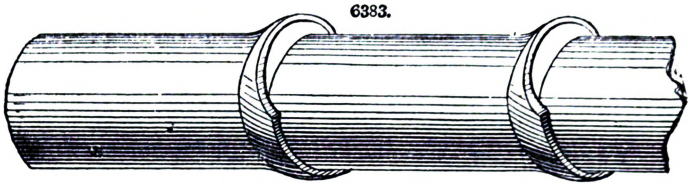

6384.

6385.

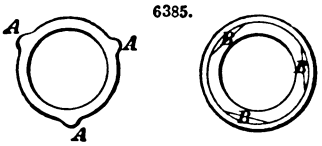

In laying sewer-pipes, the spigot end should be the lower, and great care should be taken to give them a uniform bearing, though to do this effectually a recess should be cut in the floor of the trench to receive the socket. Great care must also be taken in making the joints. The annular space between the spigot and the socket should be filled with clay worked in by a tool, and for additional security a fillet of clay may be laid on outside. Portland cement may be used with advantage where there is much subsoil water. Some engineers prefer to force into the socket several strands of tarred gaskin with a calking tool previous to using the clay or cement. No doubt, great advantages are obtained by this method by preserving the annularity of the joint. With a yielding material like clay, the superincumbent weight of earth speedily destroys this annularity, unless some means are provided for preserving it. Bothams, of Salisbury, is the inventor of an improved socket for preserving the concentricity of the joint. The spigot end of the pipe is provided with projections A, A, A, Fig. 6385, and the socket with corresponding projections B, B, B. The spigot end is inserted in the socket so that its projections lie within the projections of the socket, and then turned round until the projections of spigot and socket are brought into contact. By this means the concentricity of the joint is preserved.

Sewage-pipes are sometimes made of Portland cement, and this material is by no means unfit for pipes. Instances might be pointed out in which these have been found to be perfectly sound after being in use upwards of twenty years. They are extensively used in Germany, where they bear the effects of a severe climate remarkably well; that they are sufficiently strong is evinced by the fact that in North Prussia they are used under the railway embankments. As might be supposed, these pipes improve with age, and at the end of two or three years they are said to ring, when struck, with a clear metallic sound.

See DRAINAGE. SEWERAGE. WATER-WORKS.

PISTON. FR., *Piston;* GER., *Kolben;* ITAL., *Stantuffo;* SPAN., *Embolo.*

A piston is a short cylinder of metal or other solid substance which fits exactly the cavity of a pump or barrel, and works up and down in it alternately. It is used particularly in the steam-engine and in pumps.

PISTON-ROD. FR., *Tige de piston;* GER., *Kolbenstange;* ITAL., *Asta dello stantuffo;* SPAN., *Vástago del émbolo.*

The rod by which the piston is moved, as in a pump, or by which it communicates motion, as in the steam-engine.

PITCH. FR., *Pas;* GER., *Theilung;* ITAL., *Interasse Passo;* SPAN., *Entre-eje.*

Pitch is the distance from centre to centre of any two adjacent teeth of gearing measured on the pitch line. It is also the distance measured on a line parallel to the axis, between two adjacent threads or convolutions of a screw; and the distance between the centres of holes, as of rivet-holes in boiler-plates.

PLANIMETER. FR., *Planimètre polaire;* GER., *Planimeter;* ITAL., *Planimetro;* SPAN. *Planímetro.*

The polar-planimeter, Fig. 6386, which for ordinary use is not much larger than a common pair

of compasses, measures the area of plain surfaces of any shape by merely following the outline of the figure with a pointed tracer F, the point E remaining stationary. The improved form given to the original instrument of Oppenkofer, by Amsler, possesses many advantages over the forms given to this instrument by Welty and others. The polar-planimeter of Amsler, with its case, weighs about seven ounces, and it can be set to any desired scale of reduction and to any unit of measure. The most simple form is shown in Fig. 6386, which, however, will only suit one scale of reduction

6386.

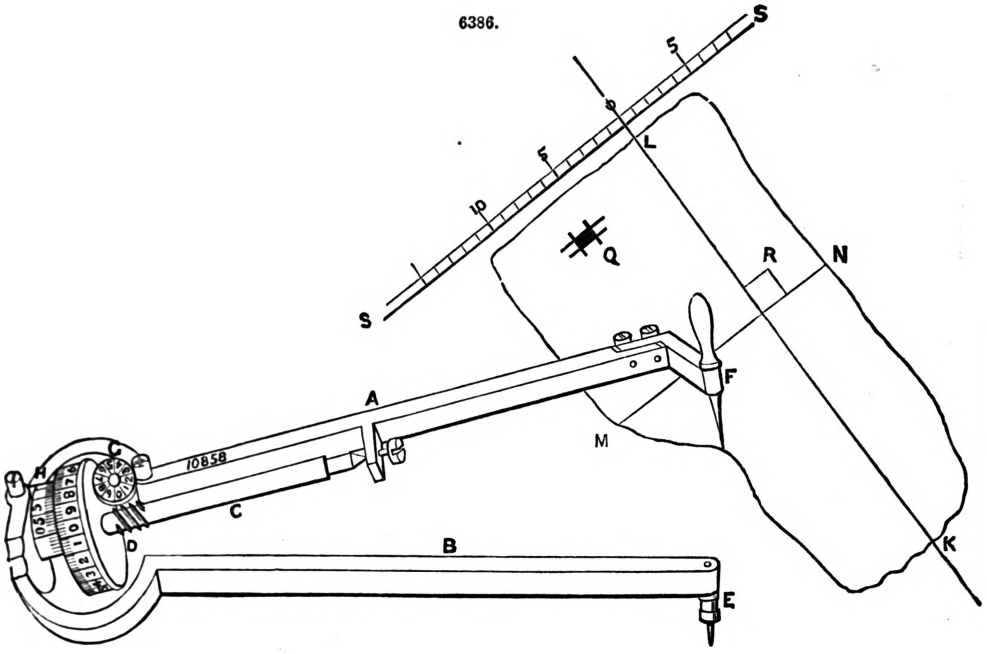

and one unit of measure; but any desired scale can be obtained by multiplying the result given by the planimeter by a constant factor. The constant factor or multiplier may be found in a few seconds, in any particular case, by passing the tracer F round a square, triangle, or other figure of known area. The index roller D must play easily without coming into contact with the vernier. The screw centres on which the axis of D is revolving must be adjusted so as to allow perfect freedom of rotation; the same is to be observed for the centre pin C. The needle point E should project but very little from its socket, and the point of the tracer F should be so formed as not to catch in the paper. The roller D, which moves on the paper, will not bear the least spot, rust, or the slightest injury, without impairing the accuracy of the instrument. The planimeter may be applied to find very exactly the mean pressure of steam from an indicator diagram card. For example, let K L M N be an indicator diagram card, each of the small divisions on the scale of pressures S S, answering to 2 lbs. = ·093 in.; the length of the stroke L K = 59 in. = 29·5 parts measured on the scale S S. Then $\frac{29{\cdot}5 \times {\cdot}093}{59}$ = the length of each inch of stroke on the line K L; let Q be a small parallelogram, whose length = ·093 and breadth = $\frac{29{\cdot}5 \times {\cdot}093}{59}$. Now suppose that we find, by passing the point E round the diagram, that the area = 123·48, or equal 123·48 small squares like R, each side of which = ·195 in., which unit of length is also given by the planimeter. Whence, $123{\cdot}48 \times ({\cdot}195)^2$ divided by $\frac{29{\cdot}5 \times ({\cdot}093)^2}{59}$ gives the exact number of small parallelograms equal and similar to Q, contained in the diagram M L N K. In the example we have taken the number is = 1085 4. Then $\frac{1085{\cdot}4}{59} = 18{\cdot}4 = \text{M N}, 18{\cdot}4 \times 2 = 56{\cdot}8$ lbs., the mean pressure.

6387.

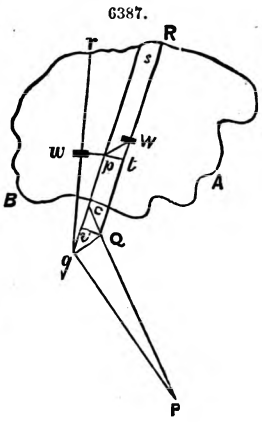

To some of our readers it may be important to prove that the principles upon which this ingeniously contrived little instrument is constructed are mathematically correct. The truth of those principles may be established as follows;—Let P Q, Q R, be two bars or rods, Fig. 6387, connected by a joint at Q; suppose the end P to be fixed, while R is passed completely round the periphery of any area A R B; and that on a given point of the bar Q R a wheel W is placed, which turns upon Q R as an axis; the motion of the rods P Q, Q R, being always in a plane parallel to the plane of the paper. Let P q, q r, and w be the consecutive positions of, and extremely near P Q, Q R, and W.

Let $\pi = 3\ 14159265\ \ldots$ P Q $= a$, Q R $= b$, Q W $= c$; and the angle P Q R $= \pi - \theta$; the angle C Q R $=$ Q C $v = \theta$, Q v is supposed to be drawn perpendicular to q C. Put x = the angle described by P Q from its initial position, and y = the angle described

by Q R in moving from its initial position; and put S for the space described in the same time by any point of the wheel W, in turning on its axis, the sliding motion not being taken into account. Then if z be the area of the irregular figure A R B,

$$\begin{aligned} dz &= \text{the sum of the areas } P\,Q\,q,\ Q\,q\,s\,R,\ s\,q\,r;\\ &= \tfrac{1}{2}a^2\,dx + q\,s \times Q\,v + \tfrac{1}{2}b^2\,dy;\\ &= \tfrac{1}{2}a^2\,dx + b\,(Q\,q\cos.\,\theta) + \tfrac{1}{2}b^2\,dy. \end{aligned}$$

$$\begin{aligned} \text{But } dS &= wp + pt = c\,dy + q\,Q\cos.\,\theta, \text{ or}\\ q\,Q\cos.\,\theta &= dS - c\,dy;\\ \therefore\ dz &= \tfrac{1}{2}a^2\,dx + b\,(dS - c\,dy) + \tfrac{1}{2}b^2\,dy\\ \therefore\ z &= \tfrac{1}{2}a^2 x + b\,S + b\,(\tfrac{1}{2}b - c)\,y, \end{aligned}$$

it is evident that when R has passed round the irregular figure $x = o$ and $y = o$, and hence x and y vanish; consequently $z = b\,S$.

If the fixed point P be taken within the figure A R B, then it is evident that the rods will completely pass round the point P, therefore the limits of x are o and $2\,\pi$, which are also the limits of y, and z becomes $b\,S + \pi\,(a^2 + b^2 - 2\,b\,c)$. Hence we have proved that if P be fixed while R is moved round the periphery of any area, the amount of rotation of the wheel W, without regard to its sliding, will be proportional to the area.

See INDICATOR.

PLANING MACHINE. FR., *Machine à raboter;* GER., *Hobelmaschine*, ITAL., *Pialla da metalli;* SPAN., *Máquina de cepillar.*

See MACHINE TOOLS.

PLATE-WHEEL. FR., *Roue à disque;* GER., *Scheibenrad;* ITAL., *Ruota di lamiera;* SPAN., *Rueda llena*

A wheel whose pin is connected with the axle by a thin plate of metal instead of arms.

PLATIN. FR., *Platine;* GER., *Tiegel;* ITAL., *Tavola mobile*, SPAN., *Platina.*

The platin or platen is the movable seat of a machine tool on which the work is secured, or in a printing press, the flat part of the press by which the impression is made; called also table and carriage. See MACHINE TOOLS. PRESS.

PLATINUM. FR., *Platine;* GER., *Platin;* ITAL., *Platina*, SPAN., *Platina.*

Until very recently, the metallurgical treatment of platinum was by the wet way. The ore was freed by mechanical means of any earth that might be adhering to it, and then acted upon by aqua regalis, which dissolved the platinum, and a little iridium. The liquor was then decanted, evaporated till nearly dry, and precipitated by a concentrated solution of chloride of ammonium. The precipitate of double chloride of ammonium and platinum thus produced was washed in alcoholized water, and then calcined. A spongy mass of platinum was the result of these operations, which mass was rubbed to a powder by hand, and afterwards made into a paste with water. This paste, when subjected to intense pressure in an iron cylinder, gave a metallic mass of a certain consistency, which was then heated to a red heat and hammered on its ends to render it homogeneous and ductile. If hammered on its sides it splits.

In 1861 M. Deville published a very important work on the metallurgy of platinum, in which work he substitutes the dry for the wet way. A hundred parts of the ore, freed of its impurities by mechanical means, are fused with an equal weight of galena, sulphuret of lead, the iron contained in the ore unites with the sulphur of the galena, and the platinum unites with the lead thus liberated. Fifty parts of lead are then added to the molten mass, which is afterwards further treated and stirred until no resisting grains are felt. The temperature during this operation must reach at least the point of fusion for gold, and may rise above that point without injury When this point of the operation is reached, air is blown into the crucible, the sulphur passes into the state of a sulphurous anhydride and liberates itself, and a portion of the galena passes into the state of lead, and combines with the platiniferous alloy, at the same time the iron and copper, which were in the state of sulphuret, collect as a scum of oxides on the surface of the bath. As soon as the liberation of sulphurous anhydride ceases, two parts of binoxide of manganese and about ten parts of glass are added, forming a fusible slag containing the manganese, iron, copper, and glass, and a metallic mass. This is then left to cool, and when ready, the crucible is broken, and the alloy of platinum and lead, which readily separates from the slag, is taken out. This alloy is next placed in a cupel resting above a crucible full of coke, and having its bottom pierced with an aperture. Crucible and cupel are then heated in a muffle, when the lead becomes oxidized and passes into the state of litharge This latter fuses, filters through the pores of the cupel, which is made of bone-ash, and falls upon the coke; there it is reduced, and metallic lead remains, which flows out through the aperture in the bottom of the crucible This operation is known as cupellation. The platinum thus obtained still contains a few hundredth parts of lead, a little osmium, some iridium and rhodium. To remove these, it is placed in a small furnace of lime, which substance is employed on account of its being a bad conductor of heat, and melted by means of the oxyhydrogen blow-pipe; it is kept in a state of fusion until neither vapour of lead nor smell of osmium is evolved.

Platinum obtained by the means just described contains iridium, and even rhodium, but this alloy is superior to the pure metal for ordinary uses. If it be required to obtain the metal perfectly pure, the platinum of commerce must be dissolved in aqua regia, and lime added while protected from the light. The iridium is precipitated in the state of oxide; the solution being then filtered, the platinum is precipitated by means of chloride of ammonium. The precipitate being washed and calcined, there remains spongy platinum, which may be employed in this state to prepare the various platinic compounds.

Platinum may also be obtained under the form of a black powder called platinum black, by heating an alcoholic solution of potash with bichloride of platinum until effervescence ceases. The

black powder precipitated is afterwards washed in alcohol, hydrochloric acid, potash, and, lastly, water.

Platinum is a bright white metal, approaching silver in appearance. It occupies the third rank for ductility, and the fifth for malleability. A platinum wire ·078 in. in diameter breaks with a weight of about 270 lbs. It is harder than silver, but not so hard as copper and iron; iridium increases its hardness. Its specific gravity is 21·15; atomic weight, 197; molecular weight, unknown. In several of its compounds it is isomorphous with iridium and osmium.

A remarkable feature of platinum is its great infusibility, melting only before the oxyhydrogen blow-pipe; when at a red heat, it is weldable like iron. It is unaffected by atmospheric influence, and does not undergo oxidation in the air at even the highest temperatures. It is not acted upon by nitric acid unless allied with silver, nor, indeed, by any acid; but in aqua regia it slowly dissolves, and forms a soluble bichloride. Potash and lithia, however, produce oxidation, and a fusible alkaline platinate is formed. With nitrate of potash this oxidation is more rapid; soda does not affect it so readily as the other two alkalies. Bisulphate of potash also attacks platinum when heated. Bromine and iodine do not act upon it, but chlorine combines with it slowly. Phosphorus and arsenic also combine with it when heated, and form a fusible phosphoride and arseniate. When a phosphorated organic matter is heated in a platinum crucible, the latter is quickly destroyed by the liberated phosphorus. Sulphur may also combine with platinum by means of heat if the metal is in the spongy state. In the presence of carbon, silica converts platinum into a fusible siliciide; therefore a crucible of this metal should never be heated directly in a coal fire, as the silica contained in the coal would destroy the crucible. Platinum in a very comminuted state unites with mercury; an amalgam of this metal may be obtained by reducing a platinic compound by means of electricity in the presence of mercury.

When in the state of spongy platinum or platinum black, this metal possesses a remarkable power of condensing and absorbing gases, one volume of platinum black being able to absorb more than 100 volumes of oxygen. This absorption appears to be accompanied by a conversion of some or all of the oxygen into the modification known as oxone, since the metal becomes capable of exerting the most energetic oxidizing action, even at ordinary temperatures. It is capable of causing the combustion of a jet of hydrogen, and it is largely employed to produce oxidation in various substances.

Platinum is tetratomic, and forms two series of compounds, in the first of which it occurs with a value of substitution equal to two, and in the second it has its greatest capacity of saturation. Thus there exist a protochloride of platinum, $Pt Cl_2$; a bichloride, $Pt Cl_4$; a bibromide, $Pt Br_4$; a protoiodide, $Pt I_2$; and a biiodide, $Pt I_4$. The perchloride and the perbromide of platinum may unite with the alkaline chlorides, bromides and iodides, thus giving double chlorides, the formula of which is, $Pt Cl_4$, 2 M Cl. The bichloride of platinum is obtained by dissolving the metal in aqua regia, and evaporating to get rid of the excess of acid. This bichloride dissolves readily in water, alcohol, and ether; it fuses when heated, and if subjected to a higher temperature than that required for fusion, it is first decomposed into chlorine and protochloride, and afterwards into chlorine and platinum. The double salts which it forms with the alkaline chlorides are nearly insoluble in water and insoluble in alcohol. At a red heat they are decomposed into alkaline chloride, platinum, and chlorine. The double chloride of platinum and ammonium leaves a residue of platinum only, on account of the volatile nature of ammonic chloride.

There exist also two sulphides of platinum, a protosulphide, $Pt S$, and a bisulphide, $Pt S_2$; these are obtained by double decomposition, by acting upon the corresponding chlorides with hydrosulphuric acid.

$$\underset{\text{Perchloride of platinum.}}{Pt Cl_4} + \underset{\text{Hydrosulphuric acid.}}{2\left(\begin{matrix}H\\H\end{matrix}\right\}S\Big)} = \underset{\text{Hydrochloric acid.}}{4\left(\begin{matrix}H\\Cl\end{matrix}\right\}\Big)} + \underset{\text{Bisulphate of platinum.}}{Pt S_2}$$

These sulphides dissolve in the alkaline sulphates, and act therefore as acid anhydro sulphides.

Two oxides of platinum are also known corresponding to the two sulphides, the protoxide $Pt O$, and the binoxide $Pt O_2$. The former is obtained by the action of potash upon the protochloride, and the latter by the action of the same alkali upon the bichloride; but these oxides being soluble in the alkalies, the solution must be afterwards precipitated by an acid. To each of these oxides corresponds a hydrate; that corresponding to the protoxide has not been analyzed, but its probable formula is $\left.\begin{matrix}Pt\\H_2\end{matrix}\right\}O_2$; the formula of the hydrate corresponding to the binoxide is $\left.\begin{matrix}Pt\\H_4\end{matrix}\right\}O_4$. The hydrogen typical of these hydrates may be replaced, either by acid radicals, in which case salts of platinum are formed, or by alkaline metals, when platinates are produced. These hydrates are therefore as much acids as basics, and their anhydrides must be considered as indifferent oxides.

Reactions of the Salts of Platinum.—The following are the characteristics of the salts of platinum:—

1. Hydrochloric acid does not precipitate them.
2. Hydrosulphuric acid produces with them a precipitate soluble in the alkaline sulphurets, insoluble in hydrochloric and nitric acid employed separately, and soluble in aqua regia.
3. In liquors not too dilute, chloride of ammonium and chloride of potassium produce yellow precipitates; and even in very dilute liquors the precipitate is formed if a little alcohol has been added.

PONCELET'S WATER-WHEEL. Fr., *Roue hydraulique de Poncelet;* Ger., *Poncelets Wasserrad;* Ital., *Ruota alla Poncelet;* Span., *Rueda Poncelet.*

See Hydraulic Machines.

PRESS. Fr., *Presse;* Ger., *Presse;* Ital., *Torchio;* Span., *Prensa.*

Printing Presses.—Fig. 6388 is a front view. Fig. 6389 a side elevation of a Gordon press, as made by Harrild and Sons, of London; and Fig. 6390 a sectional view, showing some of the working parts.

In this machine the form of type *a*, *a*, is placed in a vertical or nearly vertical position, and is held in place on the bed-plate *b* of the machine by means of a spring clip or weighted catch *c*,

6388.

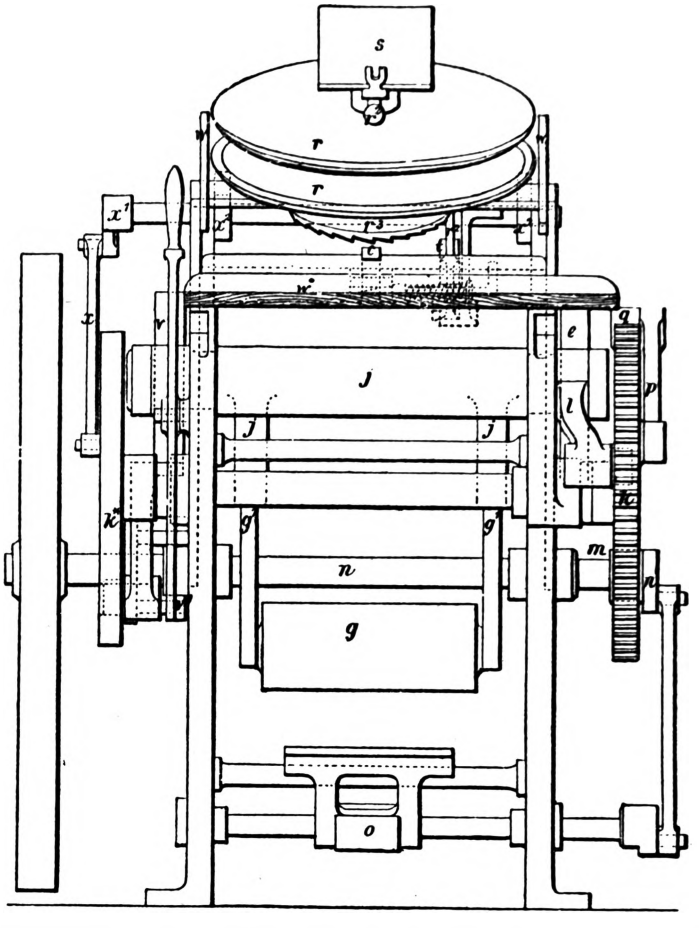

Fig 6389, so that the form *a* can easily be removed and replaced by merely throwing back the catch and lifting out the form.

The form, secured in a suitable chase and mounted on the bed-plate *b* of the machine, requires only a very slight forward motion to bring it into position to impart the impression to the paper. To this end the bed-plate *b* is mounted on a lever or arm b^1, which works on a rocking shaft b^2, so that it may be moved forward at the proper time for giving the impression to the paper. This forward motion is given by a cam-piece *d*, Fig. 6390, on the rocking shaft e^1 of the inking-roller frame *e*, *e*, *e*, coming against a knuckle-lever *f*, at the back of the form-frame and bed-plate *b*. When these two parts *d* and *f* come together the bed-plate *b* with the form *a* thereon will be thrust forward about half an inch, which is sufficient to bring it into position to give the impression to the paper when the latter is brought down by the platen *g*, which is provided with a frisket *h* to hold the paper down. The platen *g* is mounted on a vibrating frame g^1, g^1, which as it rocks on its centre of motion g^2 will bring the platen *g* forward, and downward, and opposite to the form of type, as shown in Fig. 6390. The platen frame is mounted on the shaft g^2 as its centre of motion, and is counterbalanced by a heavy weight g^* on its lower arm.

The thrust on the platen *g* is taken by a pair of vibrating arms *j*, *j*, forming part of a shaft j^1, which extends across the machine, and on the same shaft is fixed a lever *l*, provided at its end with a pin working in a cam-groove k^1 in the cam-plate *k*. The cam-plate *k* is provided on its periphery with teeth into which gear the teeth of a pinion *m* on one end of the main shaft *n*, which is actuated by means of the treadle-lever *o*, the connecting rod o^1, and the crank n^1 on the end of the shaft *n*. As the cam-plate *k* rotates the cam-groove k^1 acts on the lever *l*, and thereby moves the shaft j^1 on its axis, and brings up the vibrating arms *j*, *j*, into the horizontal position shown in Fig. 6390, so that their outer ends will be brought opposite to projecting pieces g^3 on the back of the platen.

The inking rollers e^2, e^2, are mounted in bearings at the ends of the spring rods e^3, e^3, which work in one swinging frame *e* mounted on the shaft e^1, behind the vibrating form-frame *b*. The swinging inking frames *e*, *e*, are keyed on to the rocking shaft e^1, on the outer end of which is a crank-arm or lever *q*, which is connected by a link *p* to a crank-pin fixed on the face of the cam-plate *k*, so that as this latter rotates in the direction of the arrow in Fig. 6389, the link *p* will push back the crank-arm *q*, and thus cause the inking frame *e*, *e*, to swing on its centre of motion e^1, and carry the inking rollers e^2, e^2, up to and over the surface of the type in the form *a*, to the movable

distributing surfaces r, r, above. These surfaces are in the form of circular discs, to which rotary motion on their vertical axes is given by means of a pawl r^2, acting on a circular ratchet rack r^3,

6389.

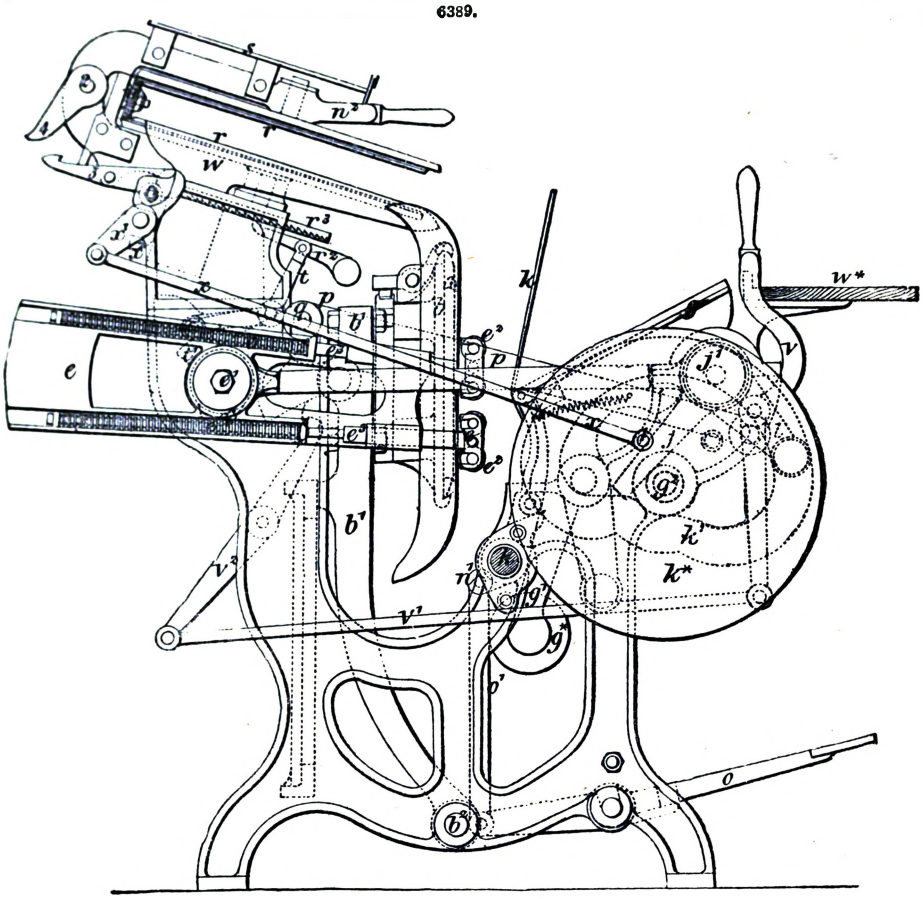

mounted on the axle of the circular disc r. The pawl r^2 is mounted at the upper end of a bell-crank lever t, the other arm of which is acted on by a cam t^1, shown by dots in Fig. 6389, mounted on the shaft e^1, so that as the latter rotates and causes the swinging inking frame e to carry the inking rollers e^2 up over the surface of the form of type the circular distributing surfaces are made to move round a few inches on their centre of motion.

For light work an ink fountain will not be required, as but a small quantity of ink will be used on the job. A sufficient quantity for a small job may be placed on a fixed plate s situated above the rotating distributing surfaces r, r, and these latter may be supplied from time to time by means of a small hand-roller.

6390

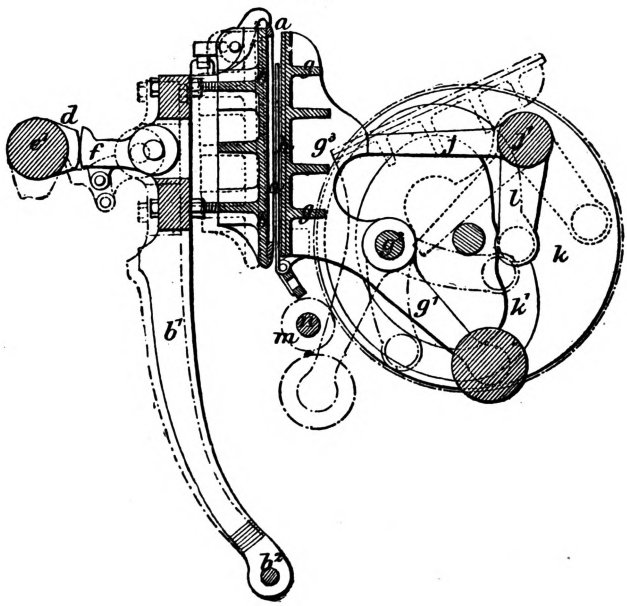

The two distributing discs r, r, are geared together by the wheel u, so that they will rotate in opposite directions, and the inking rollers e^2, e^2, in advancing will rotate in contact with one disc, that is to say, the lower one as they run along the guides w, w, and in retreating they will be lifted up by the guides w, and will rotate in contact with the other or upper disc. This lifting motion of the guides w is effected by

means of a stud-pin 1, fixed on the face of the cam-plate h, which by means of the rod or link x will draw down an arm x^1, on the axle of which is a snail x^2, which by bearing against a bowle on the frame of the guides w, w, will lift up the latter and thus cause the inking rollers to rotate in contact with the upper disc.

To obtain access to the double distributing surface the upper disc r is mounted in a movable frame which is capable of being lifted up on the centre pin 2 by the handle r^2. When raised it may be held in the elevated position by the catch 3 which will lay hold of the tail 4 of the upper frame. The attendant may then supply more ink by means of his roller, as already explained.

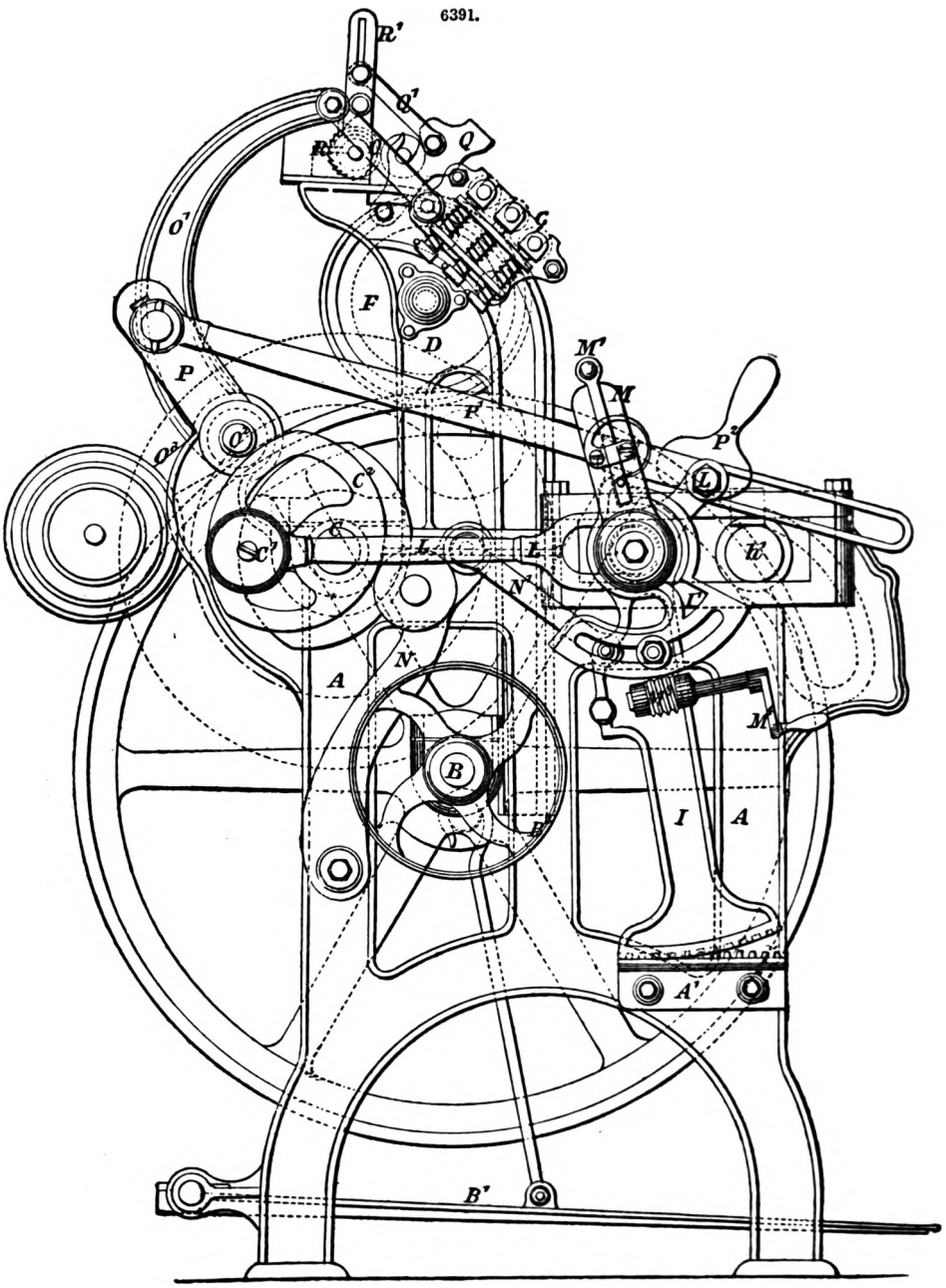

In order to throw the machine out of gear and prevent the form of type from printing, although some of the parts may be in motion, a hand-lever v is connected by a link v^1 to a stop-lever v^2, which when acted upon will lift up the knuckle-joint f, at the back of the vibrating form-frame b, so as to prevent the cam-piece d on the vibrating shaft e^1 from coming against it and driving forward the form a. This arrangement will be found very convenient when the machine is to be driven by power.

Fig. 6391 is a side elevation; Fig. 6392 is a front elevation; and Fig. 6393 a vertical section

taken in the line 1, 2, of Fig. 6392, of an ingenious modification of the Gordon press, designed by William Carwood, and of which Hopkinson and Cope, London, are the makers.

6392.

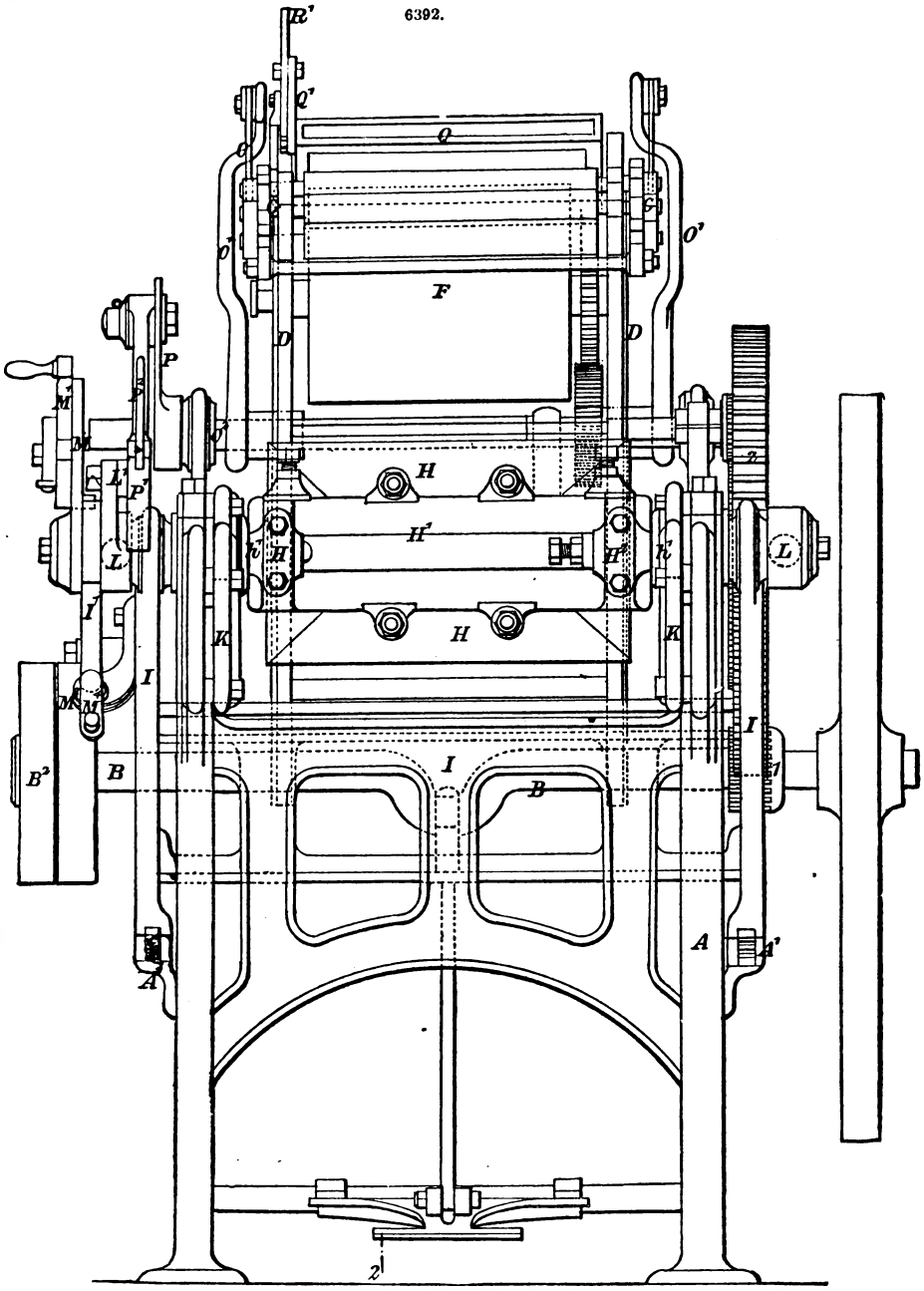

A A is the main framing, supporting in bearings a driving shaft B, which may be worked by a treadle B^1 or by a band from any prime mover working over the band-pulley B^2. Keyed to this driving shaft B is a spur-pinion 1, which gears into and drives a spur-wheel 2 on the main shaft C, running in bearings at the back of the frame A. This frame A carries within it standards D, D, to which is affixed the vertical bed E of the press, and near the top of the standards is mounted the ink distributor F. These standards D form guides for an inking-roller carriage G, the rollers of which take up ink from the distributor and passing down the standards impart ink to the type, which is secured to the bed E by means of the type frame E^1. Immediately opposite the type frame is mounted the platen H, bolted to a sliding tipping block H^1, provided at its rear with a pair of arms H^2. These arms each carry a stud-pin h, and mounted loosely on each stud-pin is a flanged bowle h^1 for the purpose to be presently explained. The tipping block H^1 is made hollow to receive a horizontal shaft H^3 fitted therein so as to turn as in bearings. The ends of the shaft are slightly eccentric to the main body, and they are supported in bearings formed by sliding blocks

which work between parallel horizontal guides formed in the upper part of the framing A. The ends of the shaft H^3 project through their bearings, through the sliding blocks, and through the upper frames of a rocking frame I, external of the framing A. This rocking frame is supported on horizontal bracket-pieces A^1 bolted to the frame A, and furnished with rack teeth, and the lower ends of the framing I are segment-shaped, the segment being struck from the axis of the shaft H^3, and furnished with teeth which gear into the racks of the bracket-pieces A^1. This arrangement ensures that the axis of the platen-shaft shall on the advance of the platen to give the impress, be always in the same horizontal plane.

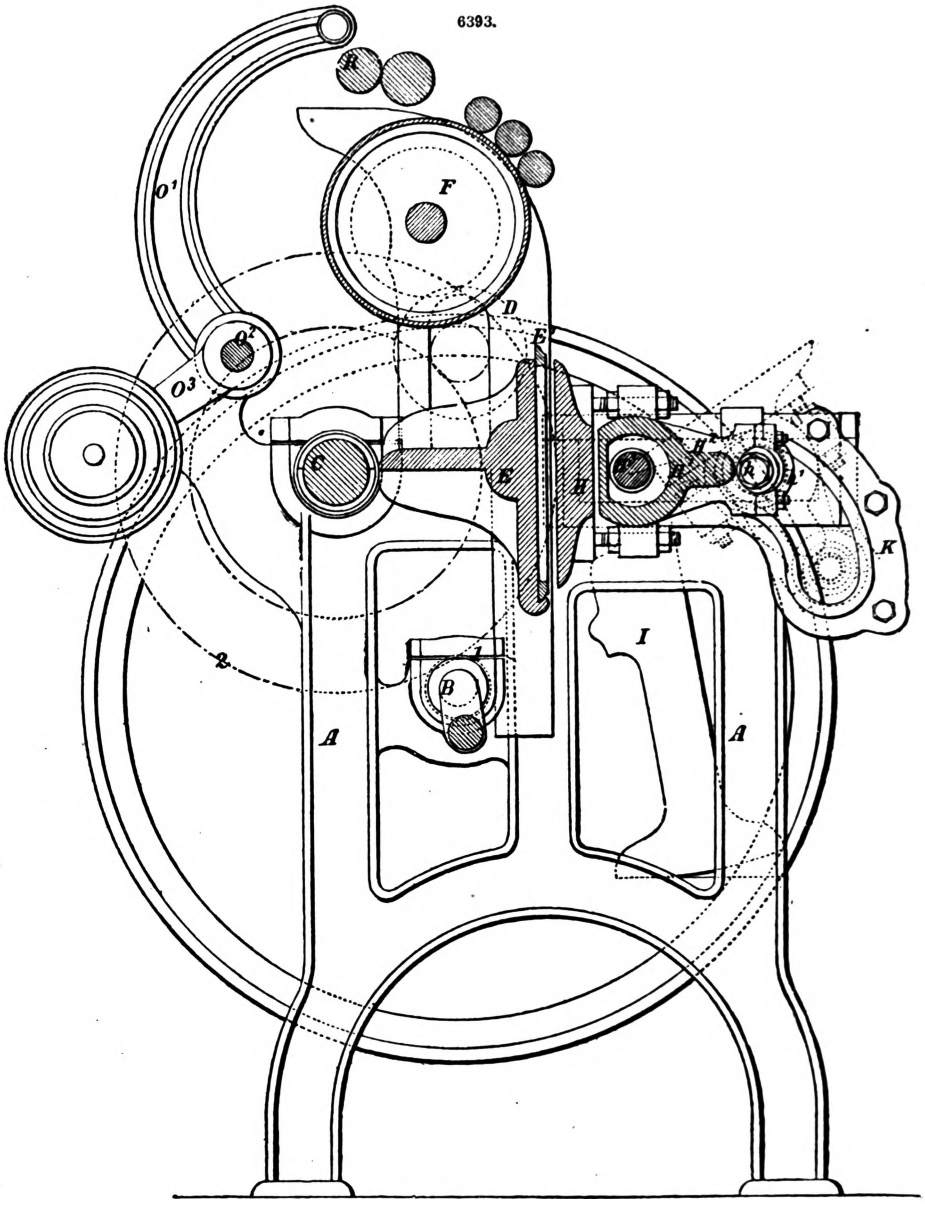

For the proper operation of the machine it is requisite to give to the platen H not only a traverse motion to and from the type, but also a tipping motion when it is withdrawn from the type, in order that the impressed sheet may be readily removed and a fresh sheet supplied thereto. It is for this purpose that the block H^1, which carries the platen, is made free to rock on its shaft H^3. To ensure this tipping motion curved guides K, K, are provided. These guides are made fast by means of bolts to corresponding projecting pieces on the frame A, and in the curved grooves of these guides the before-mentioned flanged rollers h^1 run. Thus as the platen is withdrawn from the type it will, by the running of these rollers down their curved guides, be tipped into the inclined position, Fig. 6393, ready to have the printed sheet removed and to receive a fresh sheet of paper.

The traverse motion of the platen is obtained by the throw of a pair of crank-pins C^1 acting

on it through a pair of link rods. One of these crank-pins projects from a cam C^2, keyed to the main shaft C, and the other from the spur-wheel 2. These crank-pins C^1 are embraced by straps of the link rods L, the other ends of which embrace the ends of the shaft H^3, thus allowing the link rods to move a considerable distance without acting upon that shaft. The object of this arrangement is to give the platen a dwell when it has attained the position for receiving the paper.

To prevent the platen from coming up close to the type, in order to protect the setting-off sheet from being inked, the ends of the shaft embraced by the slotted links are made eccentric. By giving a slight axial motion to this shaft in one direction the platen may be prevented from reaching the type to the extent, say, of an eighth of an inch, and consequently will not give any impression, and by turning the shaft in the opposite direction the pressure of the platen may be increased as desired. This movement of the shaft is effected by means of an arm M made fast to it. This arm carries a spring bolt M^1, which enters a notch in an adjustable segment-shaped plate I^1 through which the shaft passes, and which forms virtually a part of a rocking frame I. This plate is furnished on its lower edge with teeth, which gear into a worm M^3 mounted on the rocking frame I, and capable of being rotated by a winch-handle M^4. The segment-shaped plate is made fast to the frame I by a clamping nut, but when this is slackened it may be adjusted axially by the worm M^3, so as to bring the notch into which the spring bolt enters into any desired position for locking the eccentric platen-shaft. By disengaging the spring bolt and pulling back the lever M, which the attendant can do in an instant, the platen will be prevented from reaching the type at the greatest back-throw of the crank-pins C^1, and the platen may as quickly be readjusted for work. To prevent the link rods from striking the shaft H^3 when making their return stroke, an independent means of moving back the platen is provided. This consists of a rock lever N having its fulcrum on the frame A, and connected at its free end by a link rod N^1 to the rocking frame I. This rock lever is fitted with an anti-friction bowle, against which a cam C^2 works. The cut of this cam, Fig. 6391, is such as to press forward the rocking frame I in advance of the return motion of the link rods L, and thus prevent the link rods from coming suddenly into action on the platen-shaft.

The traverse motion of the inking-roller carriage G is obtained by means of its connection by links O with a pair of rocking arms O^1, keyed to a transverse rock shaft O^2 mounted in brackets at the back of the framing A. Keyed also to this rock shaft is a weighted lever O^3, which, acting as a counterweight, tends to return the carriage to or maintain it at the elevated position of Fig. 6391. P is an arm keyed to one end of the rock shaft O^2, carrying a stud-pin for receiving a connecting rod P^1. This rod has at its free end an elongated slot for receiving a pin L^1, which is carried by an extension of one of the connecting link rods L. The rod P^1 is provided with a tumbling claw P^2, which is intended to drop over the stud-pin L^1, and thereby connect the rods L and P^1 together. Through this connection the throw of this crank-pin C^1, Fig. 6391, will cause the rod P^1 to pull over the rocking arms O^1 as the platen recedes from the type, and to move down the inking-roller carriage over the type and ink its surface.

On the return motion of the platen the crank-pin C^1 will, through the link rod L and stud-pin L^1, force back the rocking arms O^1 to the position of Fig. 6391, and so lift the inking-roller carriage and pass it over the ink-distributing roller. The carriage in returning to its quiescent position will strike a rocking frame Q mounted on the standard D and carrying the vibrator inking roller. This action will throw that roller into contact with the fountain roller R, and cause the latter to impart a fresh supply of ink. The rocking frame Q connects by a link Q^1 with an arm R^1 that carries a pawl for operating through a ratchet-wheel the fountain roller in the usual manner.

It will be understood that, on the return motion of the carriage G the rocking frame Q will be free to fall back to its depressed position, and bring its roller now charged with ink into contact with the distributor F, which will then in due course impart the same to the rollers of the inking carriage.

When it is desired to increase the supply to the inking rollers they may be left in contact with the distributor while that is still rotating, so as to accumulate ink on their surfaces, by simply tripping up the tumbling claw P^2, which will disconnect rods L and P^1, and thus leave the latter still while the former is being moved by its crank-pin, the pin L^1 being left free to slide in the elongated slot of the rod P^1. In like manner if it is required to pass the inking rollers two or more times over the type before taking off an impression, that can be readily done by maintaining the connection between the rods L and P^1, and turning the platen-shaft H^3 so as to keep the platen out of action by the means above explained.

An excellent lithographic power press by A. H. Marinoni and F. N. Chaudré, is shown Figs. 6394 to 6396. A is the lower framing on which the various parts of the apparatus are mounted; B, side frames, supporting the whole of the driving mechanism; C, carriage, carrying the movable plate on which is mounted the lithographic stones or type; D, screws, serving to regulate the height of the plate or movable plane; E, E, wheels or rollers, carrying carriage C; F, printing cylinder; G, small cylinder, provided with grippers, serving to take the sheet from the printing cylinder and to convey it on the tapes; H, curved frame, carrying the gauging tables, the rollers, and tapes, the mechanical receiver, and other parts; I, receiving table; J, supports of damping rollers; K, supports of inking rollers; L, supports of distributing rollers; M, rod serving to stop the printing roller; N, principal horizontal connecting rod, having a friction roller at one end and serving to transmit the motion to the mechanical receiver; O, eccentric or cam, operating connecting rod N; P, lever, having a toothed segment actuating the shaft of the receiver; R, combination of wood laths or plates, mounted on an iron shaft, serving to invert the printed sheet on the receiving table; S, S, tapes for conducting the sheet; T, small wood table on which the plates R rest in readiness to receive the sheet; A^1, large toothed wheel, mounted on the shaft carrying the eccentrics for stopping the cylinder, the eccentric regulating the receiver and the crank which actuates the plate-holding carriage; B^1, intermediate wheel, governing wheel F^1 of the inking

cylinder; D¹, ink reservoir; E¹, fast and loose pulleys, mounted on the pinion-shaft, driving the whole apparatus by any suitable power. This machine may also be arranged to be driven by hand.

6394.

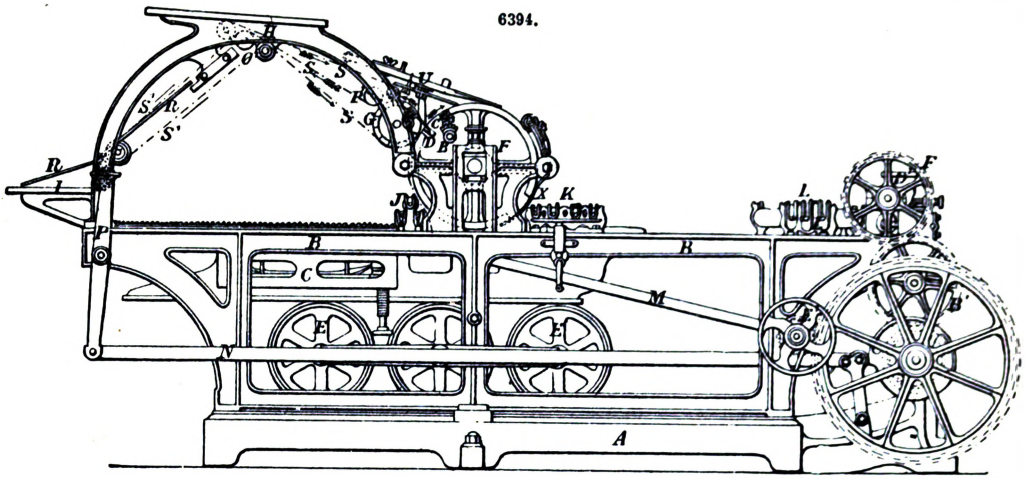

6395.

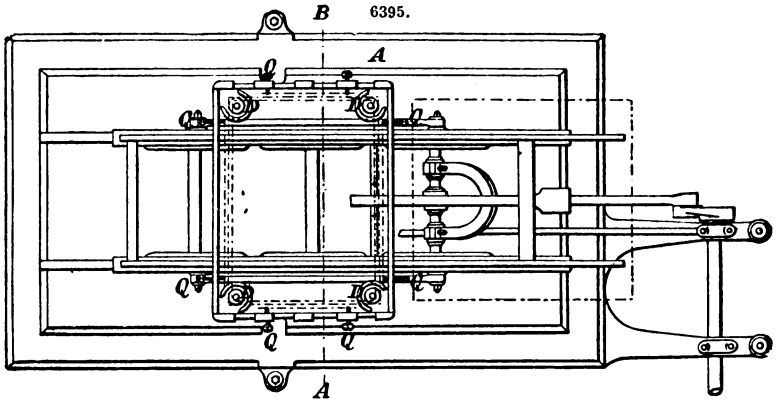

6396.

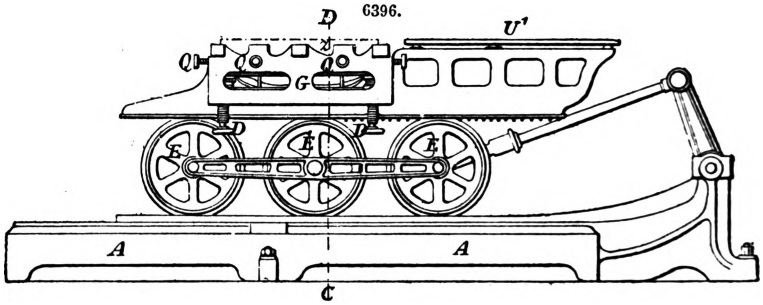

A, Fig. 6395, is the lower framing of the machine, showing the ways on which run the wheels carrying the carriage, the latter being provided with a plate serving to receive the lithographic stone. This plate, which is commonly termed the slab, is regulated in position in an upward and downward direction by screws D, Figs. 6394, 6396, and sideways by screws Q, Fig. 6395.

A, Fig. 6396, frame of the machine seen longitudinally; E, E, wheels on which the carriage Q¹ is mounted, also showing screws D, and Q Q, serving to fix and hold the plate carrying the lithographic stone or type Z, and section of the metal table U¹ for receiving and distributing the ink on the rollers.

F, Fig. 6394, is the printing roller; G, cylinder of smaller diameter, turning in an opposite direction, but at same speed as cylinder F, and serving to change the direction of the sheet. These two cylinders are each furnished with two shafts B, B¹, C, C¹, those marked B, B¹, having each at the one end a toothed segment, and also furnished with a spiral spring; the shafts C, C¹, are also toothed and gear with B, B¹, being further furnished with a series of grippers for seizing the paper sheet and pressing it on the small supports D, D¹, faced with india-rubber, which are mounted on a rod in the interior of each cylinder. One of these supports in cylinder F bears fixed points not shown in the drawing, while on the other end of the shafts C, C¹, is a small crank furnished with a

friction roller, which in coming in contact with cams mounted on the side frames opens or closes the grippers when desired; U, gauging table or plate, under which is placed the lever carrying the movable plate, the upper surface of the table being furnished with gauges. The parts for actuating the lever of the movable pointers, and those for bringing down the grippers of the printing cylinder, as also other parts not necessary for the elucidation of these improvements, are omitted in the illustrations, being the same as in ordinary printing machines.

The sheet of paper is placed on the table U, between the gauges which guide it on the sides and at front and back, up to the moment when it is seized by the grippers of shaft C of cylinder F and pressed on the india-rubber faced supports D; the cylinder carries round the sheet, which is only held on its edge by the grippers, and at front and back by a series of metal plates X, which secure it on the cylinder without the aid of tapes. When the cylinder F has completed a certain part of its revolution, and the grippers still holding the sheet have arrived at point R^1, the grippers C^1 of cylinder G are quickly brought down so as to grip the sheet, while it is also released from grippers C. The cylinder G carries the sheet round to point P^1, where the grippers of the shaft C^1 open in order to allow it to pass on to the tapes S, S, on which it is conducted to point O^1, when it falls on to tapes S^1, which convey it to the plates of receiver R, in order to reverse it on the table, where all the sheets are deposited after being printed.

Fig. 6397 is of A. H. Marinoni's rotary perfecting press printing from the continuous roll. In this press the continuous paper is cut up into sheets of any desired length before printing, and is delivered by mechanical means at four or more points, the difficulty in delivering the sheets in continuous paper printing machines being thus obviated. The paper being cut up in the machine itself before being printed, the size of the sheet may be altered without changing the cylinders, it being simply necessary to retard the feed of the paper roll in order to diminish the length of the sheet.

6397.

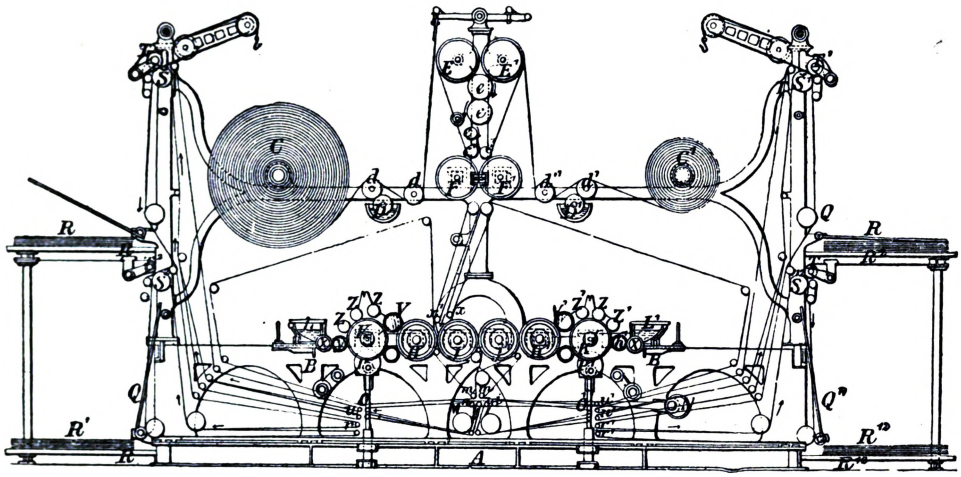

Dividers are employed, which conduct the sheet to the four mechanical arms or flyers, where they are divided in the longitudinal direction of the machine after printing, having been divided in the transverse direction before printing, as above mentioned.

In Fig. 6397, which is a front view of the entire machine, A is the bed; B, side frames; C, C^1, rolls of continuous paper; D, D^1, dampers; E, E^1, e, e^1, drums and rollers for drawing off the paper; F, F^1, cylinders for cutting it up into sheets. There are drums which conduct the said sheets to the blanket cylinders J, J^1, to be printed on both sides by the plates on cylinders H, H^1; K, K^1, cylindrical inking tables; L, L^1, ink fountains; M, first apparatus for dividing the sheets placed at the centre of the machine; N, eccentric, by which the same is operated; O, O^1, second sheet-dividing apparatus, placed towards either side of the machine; P, P^1, eccentrics for operating the same; Q, Q^1, mechanical flyers or receivers; R, R^1, tables for receiving the printed sheets; S, S^1, rollers, at which the sheets are delivered from the machine; T, T^1, knives; X, X^1, ductor rollers; Y, Y^1, vibrators or transferring rollers; Z, Z^1, distributing rollers; V, V^1, inking rollers.

The machine is arranged to receive two rolls of continuous paper, so that whilst one is in use another may be supplied to replace it when exhausted. The rolls of paper coiled on spindles are placed on the machine at C, C^1, and in unwinding the paper is passed over one of the dampers D or D^1, and then between rollers E, E^1, from which point it takes exactly the same course, whether coming from C or C^1, so that it will suffice to describe the action of the machine with reference to one roll, the other operating in an exactly similar manner. For example, the paper from roll C first passes over a roller *d*, turning by contact with a roller D immersed in a trough containing water. The water is taken off roller D by the small roller *d*, and deposited on the paper for the purpose of damping it. The paper thence passes under roller *d*, and afterwards between the drums E, E^1, and rollers *e*, in the direction indicated by the arrows to rollers e^1, e^1, where it is delivered to the cylinders F, F^1, which cut it up into sheets. The cylinder F is provided with a saw blade, placed between two metal bars fixed on springs, these bars being made to slightly project from the cylinder. The cylinder F^1 is also provided with two bars, which in this case are fixed, but also projecting from the cylinder and exactly corresponding with those of cylinder F. When the two bars of cylinder F meet the bars of F^1, they become compressed, the saw blade is

disengaged and enters the space between the bars of cylinder F^1, thus severing the paper. The cylinders F, F^1, make the same number of revolutions as the cylinders H, H^1, consequently a sheet will be cut off for every revolution of cylinders H, H^1. The drums E, E^1, unwind from the rolls at each revolution a length of paper equal to their circumference, and on setting the machine in motion the paper is conducted by means of tapes over rollers d^1, d^1, drums E, E^1, e, e, e^1, e^1, between the cutter cylinders F, F^1.

From the foregoing it will be seen that as the length of the sheet is dependent on the size of the drums E, E^1, it may be readily changed by varying the diameter of these drums or changing the gearing so as to vary the surface speed.

In the arrangement shown the paper is unwound by draught simply, but this is best effected by mounting the roll of paper on a cylinder, performing the same number of revolutions as the impression cylinders, and unwinding at each turn a length of paper equal to its circumference. The length of the sheet would in this case also vary according to the diameter of the cylinder, by contact with which the roll of paper is unwound.

The paper after being cut into sheets at F, F^1, is conveyed by the tapes over rollers g, g^1, and the small rollers x, x^1, to the blanket or impression cylinders J, J^1, and the sheets are thence all conducted between the rollers m, m. The sheets in passing over cylinder J are printed on one side by the plates of cylinder H, and passing thence to cylinder J^1 are reversed, that is to say, the side which has been printed by cylinder H is applied on cylinder J^1, and the blank side receives an impression from cylinder H^1, which is also provided with plates. The sheets after being printed on both sides are passed between the two rollers m, m, whence they are conveyed in succession to the four flyers or mechanical receivers.

The paper after being cut up into sheets is conducted direct to the printing cylinders by means of the small rollers x, x^1. By this arrangement the cylinders J^1, J^1, are rendered easy of access.

The inking apparatus is composed of the ink fountains L, L^1; X, X^1, ductor rollers rotating in the ink troughs; Y, Y^1, vibrating rollers which are alternately in contact with rollers X, X^1, and inking tables K, K^1, the latter having continuous rotary motion. The ink is thus deposited on the inking tables K, K^1, by the aid of ductor rollers X, X^1. The rollers Z, Z^1, turn in contact with tables K, K^1, and have also a sideway motion for distributing the ink; V, V^1, inking rollers rotating in contact both with the tables K, K^1, and the plates on the cylinders H, H^1, which rotate in the contrary direction to K, K^1. The inking rollers V, V, V^1, V^1, receive a continual supply of ink from the inking tables K, K^1, for inking the plates.

In order to deliver the sheets to the four flyers, or mechanical receivers, below the rollers m, m, is placed the first sheet-divider M, consisting of two longitudinal sliding frames carrying four rollers n, n, i, i. These slides have a movement imparted by an eccentric N, in such manner that the rollers n and i are alternately brought under the rollers m, m.

In the position shown in Fig. 6397, the rollers n, n, correspond with the two rollers m, m, and the printed sheet will pass between the tapes on n, n, and be conveyed between the two rollers which are on the left-hand divider O. When, on the contrary, eccentric N brings the two rollers i, i, under rollers m, m, the sheet will pass between the tapes on i, i, and be conducted to the right-hand divider O^1. Thus, by the aid of divider M, the sheets are alternately conducted to either end of the machine. The side divider O is composed of two vertically moving bars carrying two rollers over which the tapes from n, n, pass. The vertical bars are operated by eccentrics P, which give an up and down motion to them. The two rollers carried on the bars of the divider O are then opposite the two rollers u, u, consequently the sheet will pass between the latter in the direction indicated by the arrows to the arm or flyer Q, by which they are laid on table R. In the lower position of the sliding frames the two rollers carried by them are brought opposite the rollers r, r, and the sheets passing through n, n, are conducted between r, r, following the direction indicated by the arrows until they arrive at the flyer Q^2, by which they are laid on the table R^1. A similar distribution of the sheets is performed by the divider O^1, which conducts the sheets alternately to flyers Q^1 and Q″.

It will thus be seen that each flyer, Q, Q^1, receives only one fourth of the printed sheets.

With dividers arranged in the above manner there may be any number of flyers placed on the machine, as desired.

The sheets on reaching the delivering rollers S, S^2, S^1, S^{12}, are cut in the longitudinal direction of the machine by the knives T, T^1, formed of steel discs working against steel rings fixed on rollers S^2, S^{12}. These circular knives may be thrown out of gear to allow the sheet to pass through without being cut, if desired.

A great advantage with this machine is that it may be converted into a hand feeder by providing it with feeding boards from which the sheets are fed by hand to the cylinders F, E. The cylinders F, F^1, in this case simply serve as entering drums.

The general arrangement of the Walter press is shown by the diagram, Fig. 6398.

The reel of paper is at the extreme right. The paper is led from the reel into a series of small cylinders, where it is damped, and is then brought between the first and second of four cylinders raised perpendicularly above each other. The top cylinder is encircled by stereotype casts from four pages of type, and the lowest of the four cylinders is similarly surrounded by stereotype plates of the remaining four pages of the newspaper. The paper, in passing between the first and second cylinders, receives the impression on one side. It then passes backwards between the second and third cylinders, and resumes its forward direction in passing between the third and fourth cylinders, from the latter of which it receives an impression from the stereotype plates on the side of the paper exactly opposite the part printed by the top cylinder. The paper continues its course onwards till it passes between two cylinders exactly in the centre of the machine, where it is cut into sheets, each forming a complete newspaper. Adjoining the cutting cylinders is an index, which counts each sheet as it is cut. After the cutting is accomplished, the sheet is led forward by a set of tapes till it reaches the apex of the triangle formed by the left portion of the machine. From this point it

descends perpendicularly, and the sheets are thrown alternately forwards and backwards on to the boards. The series of rollers shown immediately to the left of the reel, and a similar series on the

6398.

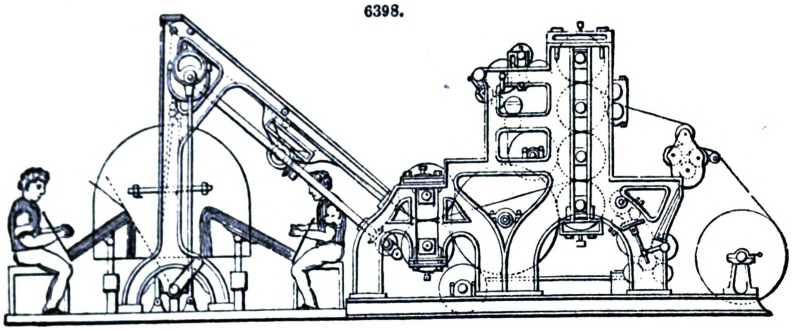

left of the upper printing cylinder, supply and distribute the ink, which is pumped up by mechanical contrivances from a cistern placed beneath the floor.

PUDDLING. Fr., *Puddlage;* Ger., *Puddeln.*

See Iron.

PULLEY. Fr., *Poulie;* Ger., *Rollkloben;* Ital., *Puleggia;* Span., *Polea.*

See Mechanical Movements.

PUMP. Fr., *Pompe;* Ger., *Pumpe;* Ital., *Tromba;* Span., *Bomba.*

In our articles on Drainage and Hydraulic Machines we had occasion incidentally to investigate the nature of a pump, and to describe several novel and important specimens actually in use. But as those articles are devoted, in the one case, to a particular purpose to which a pump may be applied, and, in the other case, to the far wider subject of hydraulic machinery in general, those investigations and descriptions were necessarily wanting in comprehensiveness and in that natural sequence of ideas requisite to a full and precise understanding of a matter more than usually complex. We shall therefore review some ground already hastily passed over, and where occasion requires, re-investigate principles previously enunciated and briefly discussed.

A pump is a machine for applying force to a fluid, either for the purpose of causing it to ascend from a lower to a higher level, or of making it flow against an opposing force other than that of gravity acting upon the portion of the fluid to be put in motion. This definition divides pumps into two great primary classes, which may be subdivided into several secondary classes, according to the special use to which the pumps are applied. Thus arranged, the subject appears as follows;—First division, pumps for draining mines, pumps for surface draining, pumps for irrigation, pumps for water-supply, pumps for raising particular liquids, contractors' pumps, pumps for emptying docks, bilge-pumps; second division, pumps for supplying hydraulic machinery, feed-pumps, air-pumps. We purpose to consider the subject of pumping machinery under these several heads, omitting the purely elementary portion, which has already been given in the article on Drainage. Before, however, we can intelligibly point out the distinctive features of the many kinds and varieties of pumps now in use, and intelligently determine their respective merits, it will be necessary to consider the requirements which any pump must satisfy to render it a perfect machine.

The first of these conditions or requirements is due efficiency. This condition is common to all classes of machines and is of primary importance in all. Until very recently, pumps have been, from this point of view, the most unsatisfactory of mechanical appliances. It has been stated on good authority that previous to the International Exhibition of 1851, no pump ever attained an efficiency of 40 per cent., and that many returned no more than 10 per cent. of the force expended in water raised. Since that time, however, the attention of engineers has been directed to the subject, and such improvements of design and construction have been effected that this enormous loss of power has been reduced, in average cases, by at least one-half. So far this is a very satisfactory result. But there yet remains much to be done before that degree of perfection is reached to which other kinds of machinery have been carried. The large proportion of the motive power absorbed by the organs of transmission, and the loss of water through the valves, still leave much to be desired. In determining what is due efficiency, regard must be had to the character of the work, and also to the conditions under which it is performed. A pump for draining a mine, for instance, may return in water raised 10 per cent. less than another pump applied to the draining of a surface, and yet the former may be a more satisfactory machine than the latter. Thus, due efficiency must be considered *relatively*, not *absolutely*. This is more or less true of all machines; but it is especially true of pumps, which are established under such a variety of circumstances.

A second requirement for a pump is that it shall be simple in construction, and not liable to get out of order. The nature of the work required of a pump demands almost absolute immunity from derangement. It is erected in positions where it is most difficult of access, and the cost of repairs is consequently excessive. Moreover, if required to work continuously, or at short intervals, a delay of a few hours may result in incalculable loss and inconvenience. And it must not be forgotten that pumps, more perhaps than any other kind of machinery, are entrusted to the management of unskilled hands. The rough and ignorant usage to which pumps of all kinds are constantly subjected, would be speedily fatal to their working, were they not constructed of few moving parts, of great strength and simplicity, easily replaced in case of accident, and capable of being repaired by the most inexperienced hands.

The above conditions must be satisfied by every kind of pump whatsoever; we shall mention hereafter those which are essential to particular varieties.

Force may be applied to a liquid through the medium of a pump in two ways. One way is to bring the liquid upon a piston working up and down in a cylinder, to the upper end of which a pipe may be fixed; the upward motion of the piston then raises the water at every successive stroke until it reaches the top of the cylinder or pipe. Pumps of this kind are called *lift*-pumps, because the liquid is lifted by the piston to the required height. And it is obvious that this height is limited only by the strength of the materials and the force available. The way in which the liquid is brought upon the piston is shown in the article on Drainage, Fig. 2527. It will be seen by this figure that atmospheric pressure is employed to raise the water a portion of the height. This part of the pump is called the suction, and that above the piston the lift. The suction should not exceed 25 ft. in height, for though a column of water is not in equilibrium with the atmospheric pressure until it reaches a height of about 33 ft., the resistance occasioned by friction, as well as the rapid flow necessary to the satisfactory working of a pump, forbids the attaining of this limit. Even 25 ft. is too high to ensure a perfect working, and when large quantities of water have to be raised, it is better to limit the suction to 20 ft. The height of the lift is theoretically limited only by the considerations mentioned above, but practically the limit is somewhat restricted. As shown in the figure already referred to, the piston-rod is inside the ascension-pipe, and consequently lessens the area or water space on that side of the piston, thereby largely increasing the friction. This circumstance necessitates the use of iron for the piston-rods, in order to reduce their dimensions to a minimum. But even with this material, the dimensions requisite for a great height would considerably reduce the efficiency of the pump. Another reason for limiting the height of a lift is the necessity of counterbalancing the whole weight of the piston and rods. But a more serious objection to the use of a lift-pump for a great height is the rapid wear and frequent derangement to which it is liable, with the consequent difficulty of repairs. This defect constitutes an objection to the use of lift-pumps at all, where a continuous working is an essential condition. For this reason they are unsuitable for the work of a town water-supply, though they are frequently recommended for that use, and as frequently employed. The wear of the leather rings forming the packing of the bucket of a lift-pump is often extremely rapid, particularly when it is aided by the action of water charged with particles of sand or gravel, or contaminated by mineral solutions that impart a corrosive quality. And there is no certainty as to the time a bucket will last; for it may vary, according to circumstances, from two or three days to two or three months. The labour of changing is in all cases expensive, but it becomes extremely so for a great height. Hence, it must be concluded that lift-pumps are unsuitable for great heights and continuous working, and that consequently they are not to be recommended in cases where either of these conditions exists.

The other mode of applying force to a fluid by means of a pump is to bring the fluid beneath a piston working up and down inside a cylinder; the downward stroke of the piston then forces the fluid up through a pipe provided for the purpose, or in any other direction that may be required. This kind of pump, the details of which are given under the head of Drainage, Figs. 2529, 2530, possesses many advantages over the other. The plunger variety, which is by far the best, was invented by Sir Samuel Morland in 1675. A remarkable feature of this invention is the stuffing box, without which the steam-engine could hardly have come into existence. The hemp packing of this stuffing box is greatly preferable to the leathers of a piston, as giving less friction, being much cheaper, more durable, more secure, and, what is of immense importance in all cases, more easily seen and repaired when defective. The packing may be tightened without even stopping the engine, and it requires only a few minutes' interruption of work to replace it when worn out. In no case is it necessary to remove the plunger itself, while, with the lifting pump, the bucket must always be withdrawn entirely from the working barrel, thus causing considerable delay every time the leathering requires to be repaired or renewed. Another advantage of the plunger-pump, in the case of rods being employed, is that it requires less counterweight to be used. The height to which a liquid may be raised by a force-pump is theoretically limited only by the strength of the materials and the force available, as in the case of the lifting pump; but, unlike the latter, it is not restricted by other practical considerations. The force-pump thus possesses great advantages over the lift in most cases where a pump can be applied, but it is especially suitable in those where either of the conditions of a considerable height or a continuous working exists.

In the two kinds of pumps described above, the pistons have a reciprocating motion. But there are other kinds, partaking of the nature of both the lift and the force pump, which have either a revolving piston or a set of revolving blades that act upon the liquid in the same way as a fan acts upon air. The former are called *rotary*, the latter *centrifugal* pumps. Yet another kind of water-raising machine exists, known as the chain-pump, which might with more propriety be called a water-elevator, since it differs in no essential feature from a grain-elevator, and lacks every characteristic of a pump. We shall consider these several varieties under their proper heads.

Reciprocating Pumps.—The essential parts of a reciprocating pump are,—the cylinder or barrel, the valves, the piston, and the piston-rod; and on the design and construction of these the efficiency of the pump chiefly depends. In order to acquire a full understanding of the nature of these constituent parts, it will be necessary to investigate briefly the principles and the conditions to which their action is subject.

The Cylinder.—As the piston or bucket reciprocates in constant contact with the walls of the cylinder, the latter must be bored true in order that the piston may fit accurately and work with as little friction as possible. The tendency of the cylinder to become oxidized when iron is used as the material of construction often constitutes a serious difficulty, especially in cases where the water or other liquid to be raised is charged with substances capable of determining rapid oxidation. In pumps for draining mines, the cylinders and pistons, when of iron, are frequently destroyed in a short time, and, of course, in such circumstances a satisfactory degree of efficiency is not to be looked for. To remedy this defect, it is usual to line the cylinders with brass, and though the first cost is considerably enhanced thereby, the additional outlay is soon recovered in

the higher efficiency of the pump, while the greater durability of the cylinder renders such outlay a real source of economy. The diameter of the cylinder is generally greater than that of the suction or the discharge pipes, and is calculated in inches by the following formula; $D = \sqrt{\frac{G}{\cdot 034\, L\, N}}$, in which G represents the quantity in gallons to be delivered a minute, L the length of the stroke in feet, and N the number of single strokes a minute. To find the quantity in gallons that a given pump is capable of delivering a minute, $G = \cdot 034\, D^2\, L\, N$; and to find the quantity in gallons delivered at each stroke, $G = D^2\, S \times \cdot 00283$.

The Valves.—The valves are a very important part of reciprocating pumps, and deserve the most careful attention. A large percentage of the power lost in a pump, perhaps the largest percentage of that power, is due to the influence of the valves. Yet, while numberless improvements have been and are being almost daily effected in other parts which absorb power, few attempts have been made to reduce the loss of efficiency in this direction. The cause of this neglect seems to lie in the fact that the loss is supposed due to the form of the valve, and as several modified forms of which much was expected by their inventors, failed to bring about any appreciable result, the exertions of mechanical men have been diverted into other and more promising directions. That this supposition is an erroneous one we hope to show in the following remarks, and at the same time to point out what, in our opinion, should be the degree of perfection aimed at in the design and construction of a valve that is to be actuated by a liquid.

In the first place, it must be borne in mind that a valve has to fulfil two requirements of an opposite nature, and that therefore the fulfilment of one is incompatible with the fulfilment of the other. These requirements are to afford an unobstructed passage to the water in one direction, and to close the passage entirely in the contrary direction. The complete fulfilment of these requirements implies the satisfaction of antagonistic conditions. Those imposed by the former are, that the valve shall be of the same weight as the water it displaces, so that it may offer no resistance to the ascending column, that its presence shall not contract the area of the passage below that of the water-way covered by the valve when closed, or otherwise obstruct the flow of the water, that it shall move with the same velocity as the water. But even this set of conditions, apart from those implied in the second requirement, cannot be wholly complied with. Every variety of valve applicable to a pump belongs to one of two classes, known respectively as the *hinged* and the *spindle* valve. The former is hinged to its seat like a trap-door, and is so well known as to need no description; this kind is usually called the clack-valve. The latter rises perpendicularly from its seat, and the extent of its motion is limited by a spindle or rod fixed to its lower face, or by some similar arrangement. Now, it is evident that both these kinds may be made of any degree of lightness, and that therefore they fulfil equally the first condition. But the second condition can be satisfied only by the hinged valve; for this kind may open back out of the way of the passing current, while the spindle-valve, rising perpendicularly—that is, keeping its axis always coincident with the axis of the water-way—must necessarily obstruct the passage. The third condition is fulfilled only by the spindle-valve for if this kind be equal in weight to the water it displaces, it will offer no resistance to the latter, and will consequently move with the same velocity, but the hinged valve being constrained to move in a circle, the velocity of any point in the valve varies as its distance from the centre. The consequences of this motion are, that the entering current is forced away from the side of the hinge, and a whirling motion is communicated to the water above the valve. The loss of efficiency due to this cause is probably considerable, fully equal certainly to that occasioned by the diversion of the current resulting from the obstruction offered by the spindle-valve. Thus it will be seen that the first requirement, even when considered apart from the second, cannot be completely fulfilled. But when the second requirement is introduced into the question, an important modification of the former conditions ensues. For the latter demands that the tendency of the water to return shall close the valve, or at least be capable of closing it, that the valve shall be sufficiently strong to support the weight of the superincumbent water, and that it shall not allow any water to escape during the act of closing. The first of these conditions does not permit the clack to fulfil the second condition imposed by the first requirement by opening back out of the way of the passing current, for it is obvious that if this valve be open at an angle of 90°, a return current will not close it. The utmost limit that can be allowed is 70°. Hence the entering water will be thrown off the face of the valve at an angle of 20°, and against the wall of the cylinder at the same angle with the forward line of direction. The resistance occasioned by these circumstances may be taken as at least equal to that caused by a knee of 20°. The second and third of the above conditions require the valve to be heavier than the liquid, since the requisite strength can hardly be obtained without the employment of metal, and the valve must be capable of closing by its own weight. The excess of this weight above that of the liquid has of course to be supported by the entering current during the whole time of admission. Hence another source of resistance, due to the impossibility of fulfilling the first condition implied in the first requirement. The last of the above conditions is of the highest importance, and demands the greatest elucidation, since it refers to the chief source of loss, exerts the greatest modifying influence upon the first set of conditions, and seems to be the one least understood. The quantity of water lost through the valves, which quantity is usually termed the slip of the valve, is rarely equal in any two pumps of the same dimensions, and it varies from 4 to 20 per cent. of the stroke; the former percentage, however, is of very rare occurrence, though the latter is common. We believe that this serious loss, as well as the wide limits within which it is found to vary, arises from failing to appreciate the true nature of the slip. The fact that the loss is not reduced to some definite limits is a proof that nothing definite is known concerning the matter. The ignorance of makers is, in this case, excusable, since scientific writers, whose duty it is to be pioneers to the practical man, are silent on the subject, or at best utter but an uncertain sound. Thus we find it stated by one authority that the loss by slip is due rather to defects in construction than to faults in design, while another attributes it mainly to the

form of the valve. Neither of these views is, however, borne out by experience. Yet the question cannot be of a nature to defy investigation, nor can it be impossible to find a solution of a practical character. Indeed, it must be a simple and an easy matter to obtain approximate results sufficiently accurate to constitute a reliable and ready guide to practice. Such results we shall endeavour to obtain, leaving to mere theorists the labour of determining with rigid exactitude all the elements of the question. It may be well to state, however, that the conclusions to which our arguments lead have been fully confirmed by experiment.

It is manifest that if the piston pause at the top of its stroke, the column of water which then fills the cylinder will remain at rest; and if the pause be sufficiently long, the valves will close by their own weight. In this case the water displaced by the falling valve rises above the latter, and consequently none escapes through the valve aperture. The slip is therefore reduced to zero. But if, on the contrary, no such pause be made, the valve will be closed by hydraulic pressure, that is, by the force of the returning current, provided the velocity of the piston be not inferior to that of the valve, which is due to its own weight. And it must be remembered that this velocity in a submerged valve is not great. Now it is evident, in this case, that the water occupying the space passed through by the valve in closing must be expelled, since it cannot, as in the former case, rise above the valve as the latter descends. This case, therefore, represents the maximum slip, and it is this that we have to determine. Let us first take the case of the spindle-valve, Fig. 6399. This valve rises from its seating to a height h limited by its spindle or rod r. If the piston return instantly with a velocity equal to that of the falling valve, we shall have a case of the maximum slip. By equal velocities, it must be understood that we mean relatively equal velocities; for if the area of the plunger be twice that of the valve, it is obvious that to possess a relatively equal velocity the former must descend with only half the absolute velocity of the latter, since they then displace equal volumes in equal times. It is manifest that in this case the quantity of water expelled by the forcing down of the valve is the column having the upper face of the valve as its base, and as its height the distance h of this face from the seating. The amount of slip may therefore be expressed by $s \times h$, s being the area of the valve face. The same reasoning applies to the hinged valve, Fig. 6400, the only difference being that the height of the column is, in this case, the length of the arc a, or the path of the centre of the valve.

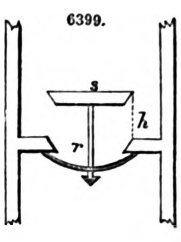

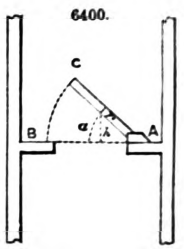

It follows from the foregoing that when no pause is made at the end of the stroke, the amount of slip increases as the lift of the valve. This conclusion is slightly modified in the case of the hinged valve by the speed of the piston, as we shall see later; but, generally, it may be said that the slip = the valve area × the mean lift. Here we see at once the cause of the serious loss of water that constantly takes place in pumps, as well as the absence of uniformity in the amount of the loss. Valves are made to open as widely as possible, in order to afford an unobstructed passage to the water. To render this proceeding justifiable, the loss of efficiency occasioned by the obstruction offered by the valve must be greater than that due to the slip. And it must be remembered that the water which flows back through the valves represents so much power lost, the same water having been previously lifted. Let us examine this question approximately by taking the angle made by the hinged valve with the forward line of direction as equivalent to a knee of the same angle, for we have already shown that the spindle-valve obstructs equally at all heights, and consequently all increase of lift beyond a certain height, which we shall presently determine, is obviously pure loss. It may be well to state here that the foregoing remarks apply equally to the forcing and the suction valves, as the column of water above the former, not being supported by the pressure of the atmosphere, acts in the same way as the plunger acts upon the latter. We have seen that the hinged valve, when opened to its utmost limit, forms a knee of 20°. Suppose now a valve 4 in. in diameter open to this angle of 70°. The resistance offered by the knee, expressed as head of water in feet necessary to overcome it, is $H = 0155\ V^2\ K$, V being the velocity in feet a second, and K a suitable coefficient. This coefficient is ·046 for an angle of 20°, and ·36 for an angle of 60°. Taking V = 4, we have H = ·0114 ft. = 137 in., and 12·56 × 137 = 1·62 cub. in. The slip S = 1·22 × 2 × 12·56 = 30·65 cub. in., total, 1·62 + 30·65 = 32·27 cub. in. If, now, we suppose this same valve open at an angle of 30° only, we shall have a knee of 60°, and the resistances, calculated as before, are H = 09 ft. = 1·08 in., and 12·56 × 1·08 = 13·56 cub. in., and S = ·52 × 2 × 12·56 = 13·06 cub. in.; total, 13·56 + 13·06 = 26·62 cub. in. Thus, by adopting the former angle of opening, we diminish the relative efficiency of the pump by an amount represented by 5·64 cub. in. of water, and the power of the pump by 17·59 cub. in. a stroke—the latter a serious loss. And the greater travel of the valve causes a greater disturbance in the water, whereby the efficiency is again diminished, and a more violent concussion, resulting in a speedy destruction of the valve. Hence the practice of giving a high lift to the valve for the purpose of affording an unobstructed passage to the water is unjustifiable.

It now becomes necessary to determine what is the most advantageous degree of lift to be given to a pump-valve. The foregoing arguments show that the gain increases as the lift is diminished. What is the limit in this direction? Evidently, if the valve be only slightly raised, the area of the passage afforded for the water between the lower edge of the valve and its seat will be less than that of its lower face, or the aperture which this face covers. Suppose, for example, a spindle-valve 4 in. in diameter; the area of the water-way closed by this valve is 12·56 sq. in. If the lift of the valve be limited to ¼ in., the passage afforded to the water will be 4 × 3·1416 × ·25 = 3·141 sq. in., or a diameter of 2 in. When the water reaches this passage, the vein will be contracted, and will reduce the size of the opening still more. Through the opening thus reduced the water must pass without any diminution of volume in a given time; hence its velocity must be increased. The

excess of force necessary to produce this excess of velocity, the direction of the motion remaining the same, will evidently be the effect of the contraction, and will represent the resistance which the contraction occasions. To find the mathematical expression of this resistance, put D = the diameter of the water-way, D' = the diameter of the contracted passage, and f = the coefficient of contraction corresponding thereto. The expression of the velocity will then be $V \frac{D^2}{f D'^2}$; the force requisite to produce this velocity, or the head of water in feet, will consequently be $\cdot 0155\, V^2 \frac{D^4}{f^2 D'^4}$, the head due to the velocity of the water before reaching the contracted passage being $\cdot 0155\, V^2$; the excess of head, or the resistance due to the contraction, will thus be

$$\cdot 0155\, V^2 \left(\frac{D^4}{f^2 D'^4} - 1\right) = \cdot 0155\, V^2 D^4 \left(\frac{1}{f^2 D'^4} - \frac{1}{D^4}\right).$$

Hence it follows that if a valve be not opened sufficiently to afford an uncontracted passage to the water, the resistances will be so increased as to outweigh the advantages resulting from the lowness of the lift; and the limit may be fixed at that point where contraction begins. The best degree of lift for pump-valves—in other words, the compromise between conflicting conditions that reduces the sum of their several disadvantages to a minimum—is thus expressed for both kinds of valves with sufficient accuracy for practical purposes by the simple formula, L = ·25 D, D being the diameter of the valve aperture, and L the height of that point in the valve which, when the latter rests upon its seat, coincides with the axis of that aperture.

The kind of valve most frequently used, especially in large pumps, is the clack. There are numerous modifications of this as well as the spindle variety, but as we intend to devote an article to the subject of valves generally, we shall not describe them here.

When the water possesses corrosive qualities, metal valves are unsuitable, and as the water of mines is usually of this character, wood and leather are almost exclusively used in mine pumps. Whenever metal valves are so employed, they are made to beat or fall, not upon seats of iron, brass, or other hard metal, but upon faced rings of hard wood let into the part which would otherwise form the seat of the valve. By this means the violent concussion to which they are subjected in closing at the return stroke of the plunger is lessened. Sometimes a soft metallic alloy of lead or tin is used instead of the facing of wood.

The Piston.—The efficiency of a pump depends in a great manner upon the state of the piston. If the latter is badly made or imperfectly leathered or packed, or if it has got out of order in consequence of wear and corrosion—and it is the part most subject to these influences—a large proportion of the motive force is absorbed by useless friction, or the pump partially fails to act by reason of the parts not being air-tight. We have already stated that the bucket, or lift-pump piston, is much more liable to derangement and wear than the plunger or forcing-pump piston. This is due to the different manner of packing them rather than to their different forms. The common form of lift-pump piston is shown in Fig. 6401. It consists of a hollow cylindrical piece of wood, usually elm boiled in oil, to which an iron stirrup is attached, and having a valve on its upper end. In small pumps iron or brass is used instead of elm wood. The advantage of employing metal for this purpose is that a less thickness being sufficient, a larger water-way may be obtained. To make the piston work air-tight in the cylinder, a piece of stout leather is applied to the outer surface in the manner shown in the figure, and held by a band or hoop. Around the lower end is a second hoop, and the hollow between these is filled up by winding on skeins of hemp dipped in melted tallow. As the hemp projects slightly beyond the hoops, it presses against the walls of the cylinder; and a sufficient quantity must be wound on to make the pressure great enough to prevent the passage of air, and no more than enough, as any excess of friction is a waste of power and a cause of unnecessary wear. The weight of the water above the piston presses the leather outwards against the walls of the cylinder, and so prevents a leakage between the latter and the piston. Numerous modifications of these arrangements may be and are made, but they do not differ essentially from the system we have described. Some of these modifications have for their object the enlarging of the water-way through the piston, and that this object is a desirable one will be acknowledged when it is borne in mind that considerable loss of power is occasioned by forcing a column of water through a contracted passage.

6401.

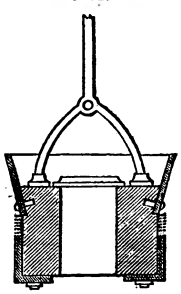

The plunger or solid piston of the forcing pump works through a stuffing box, and is therefore not subject to the wear and the liability to derangement which renders the bucket-piston objectionable. It should be accurately turned, so that there may be no unnecessary friction or wear of the packing. When of small dimensions the plunger may be wholly of brass, but when large it should be encased in brass, as iron is quite unsuitable in consequence of its liability to corrosion.

The weight upon the piston of a pump is always equal to that of a column of water whose base is the area of the piston, and whose height is the vertical distance from the surface of the pool to the point of discharge. Let H be this height in feet, and D the diameter of the piston, also in feet, and let us take the piston at any part of its stroke. Denoting the vertical distance from this point in the stroke to the point of discharge by h, and the height of this same point above the surface of the pool by h^1, we have $h + h^1 = H$. The piston will be pressed down by the weight of the atmosphere and by that of the column of water above it. Representing the height of the column of water requisite to hold the atmospheric pressure in equilibrium by t, and the ratio $\frac{3 \cdot 1416}{4}$ by π^1, the expression of this weight is $62 \cdot 4\, \pi^1 D^2 (t + h)$. The counter-pressure, or pressure beneath the

piston, is equal to the atmospheric column, less the column of water below the piston; that is, to $62{\cdot}4\ \pi^1\ D^2\ (t - h^1)$. The resultant of these two pressures, or the effective load upon the piston, is therefore $62{\cdot}4\ \pi^1\ D^2\ (t + h) - 62{\cdot}4\ \pi^1\ D^2\ (t - h^1) = 62{\cdot}4\ \pi^1\ D^2\ (h + h^1) = 62{\cdot}4\ \pi^1\ D^2\ H$, which it was required to prove. This pressure upon the piston is independent of the diameter and inclination of the pipes, and is evidently the same for the forcing as for the lift pump.

The stroke of a pump-piston should be made as long as practical considerations will admit. The quantity of water lost through the valves is the same for a long as for a short stroke, the diameter being the same. Hence the long possesses a considerable advantage over the short stroke in this respect. But a more important advantage consists in the less frequent change of direction. When it is considered that in large pumps the inertia of an enormous mass has to be overcome at every change of stroke, the reality of this advantage will be readily conceded. In mine pumps, the rods of which often exceed 100 tons in weight, the stroke is usually from 8 to 10 ft.

Experiments have shown that when the valves are of the clack variety, the slip, in some cases, decreases with the increase of speed in the piston. In some cases by doubling the velocity the amount of slip has been reduced by one-half. This is due to the fact that the valve is closed by hydraulic pressure. When the valve is heavy and the velocity of the water low, a small quantity escapes before the inertia of the valve and the friction of its hinge has been overcome by the returning stream and its own gravity. But when the piston moves with a high velocity, the whole pressure of the piston is directly and instantaneously communicated to the valve, which is then closed wholly, as we have already seen, by hydraulic pressure. If this explanation is the true one, the slip will decrease with the increase of velocity only within certain limits, and no experiments of which we are cognizant have proved the contrary.

The speed of the piston is limited by the velocity of flow in the suction-pipe. To find the extreme speed at which a piston may be driven, it will therefore be necessary to determine this velocity. Suppose the piston suddenly raised the whole length of its stroke, leaving a perfect vacuum below it, the time T requisite to bring the water to the top of this space, provided it be already up to the sleeping valve, is

$$T = \frac{2\ \pi^1\ D^2}{m\ s\ \sqrt{2\ g}}\ (\sqrt{t - L} - \sqrt{t - L - l}),$$

L being the height of the valve above the surface of the pool, l the length of the stroke, s the area of the valve aperture, and m a suitable coefficient of contraction, the other letters having the same signification as before. This formula does not take into account the friction of the water in the suction-pipe; but in this case it would be very little. Representing the mean velocity with which the water ascends in the cylinder by v, we have $v = \frac{l}{T}$. If the piston possessed a velocity V greater than v, the water would be unable to follow it. V must therefore be less than $\frac{l}{T}$; and it should not be greater than two-thirds of $\frac{l}{T}$. In practice t may be taken as equal to 32 ft., and m to include the friction of the water in the pipe, as equal to 0·60.

The expressions for v and T show that the velocity with which the water ascends in the cylinder, and consequently that which may be given to the piston, decreases as the length of the suction-pipe increases, and increases with its diameter. In large pumps the extreme limit is never attained on account of the great weight of the moving parts and the consequent strain which a high velocity would produce. Usually the speed of the piston in such cases varies from 6 in. to 15 in. a second.

Piston-rods.—When the pump and the motor are situate upon the same bed or near to each other, the piston is easily and efficiently worked through the medium of ordinary connecting rods. In such cases the pump-piston is connected with the steam-piston, when steam is the motor, either directly, by means of a rod common to both, or indirectly, by means of a crank. With a water-wheel the latter is the only method available. When, however, the pump is situate at a great distance from the motor, the transmission of the motive force to the piston is one of the most difficult problems relating to the subject of pumping. Numerous attempts have been made to solve this problem satisfactorily; but the success which has attended the efforts of inventors has, until recently at least, not been commensurate with the ingenuity displayed.

The most obvious means of transmitting the force in these cases, as in those where the motor and the pump are near together, is, of course, the connecting rod adequately extended; and this means has, for want of a better, been generally adopted; for it will be seen that, though a connecting rod is a very suitable medium so long as it is of small dimensions, it becomes most unsuitable when the dimensions assume excessive proportions. When, for example, the pump is at the bottom of a mine and the motor at surface, the weight of the intermediate rods often greatly exceeds that of the column of water to be raised, and consequently a large proportion of the motive force is absorbed by the friction of these rods and in overcoming the inertia of their enormous mass. This defect, as well as others of considerable importance, will be made more apparent by a description of the system at present in use.

The operations in a mine are carried on at several different levels. In metalliferous mines, in which the ore is found in lodes, these levels are usually at a depth of ten fathoms below each other; but in coal mines, in which the mineral exists in seams, the levels are in those seams. The water which collects in these several levels or stages is conveyed to a tank fixed in a recess cut in the side of the shaft. At the bottom level it flows into a pool or well called the sump. A lift-pump is fixed from the sump to the tank on the next level, and force-pumps are placed from tank to tank. Thus the water is raised by stages. To actuate the plungers of the force-pumps and the piston of

the lift, a rod is carried down the shaft. As the depth of the shaft in a mine that has been worked for any length of time is seldom less than 1000 ft., and as the quantity to be raised is frequently great, it is obvious that this rod must be very strong, and therefore must possess large dimensions. Usually it is composed of balks of Memel timber, perfectly sound and straight, and without knots or faults of any kind, such as are used for the masts of ships, and of as great a length as can be obtained. The lengths are put together by scarfed joints, and secured by stout wrought-iron plates bolted through the timber. To this main rod the pistons of the pumps at the several levels are firmly attached by means of a set-off and strong iron straps. These piston-rods work through guides to keep them in a straight line, and for the same purpose similar guides are placed at intervals down the shaft against the main rod. The rod where it passed through the guides is cased with hard wood, and kept well greased to lessen the friction. It will be seen from this description that the rods are of enormous weight. In deep mines, the main rod alone frequently weighs upwards of 70 tons. The mode of working the pumps is to make the motor raise the rods, and then to leave the weight of the latter to force up the water. As, however, the weight of the rods is usually greatly in excess of that required to raise the water, this excess is taken off by means of a loaded lever, called a balance-lever, or more commonly a balance-bob. Fig. 6402 shows one of these balance-bobs. It consists of a stout balk of timber *a*, often from 20 to 30 ft. in length, turning about an axis at *b*, and loaded at the end *d* by a box filled with stones or other heavy materials.

6402.

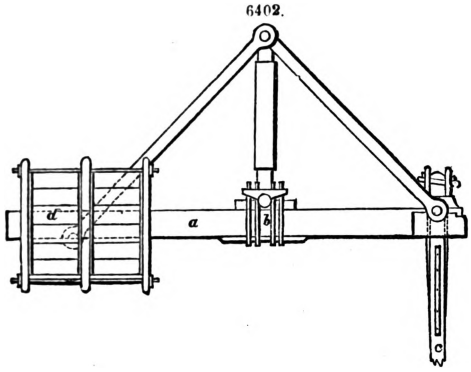

6403.

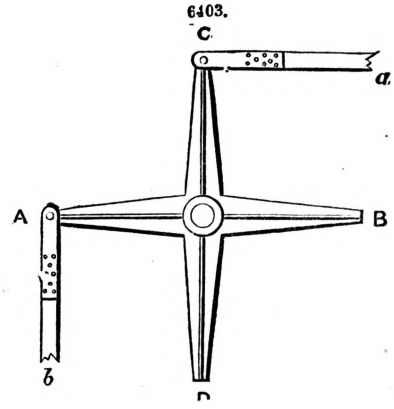

The two ends are supported by iron ties passing over an upright support upon the axis One of these bobs is placed at surface and others at intervals down the shaft, the unloaded end being fixed to the main rod *c*. When the shaft is inclined, which is frequently the case, the main rod is made to rest upon friction rollers; in other respects the arrangements are unchanged by this circumstance. A vertical rod is made to communicate motion to an inclined rod, or *vice versâ*, by means of a bent lever, called a V or angle bob. As the motor is often situate at a considerable distance from the shaft, especially when the pumps in two shafts are worked by the same motor, the rods are carried along the surface of the ground, and connected with the main rod in the shaft by one of these V-bobs. Fig. 6403 shows this arrangement. The horizontal, or, as they are usually termed, flat rods *a*, are attached by means of iron straps to the arm C of the lever, and the main rod in the shaft *b* is attached in the same way to the other arm A. When in this position, the V-bob is frequently double, as in the figure, the arms D and B serving as counterweights to A and C. Flat rods are carried upon friction rollers where the surface of the ground is level, and upon vibrating rods where the surface is depressed. One of these vibrating rods is shown in Fig. 6404; they are arranged to stand vertically when the pump-pistons are at the bottom of their stroke.

6404.

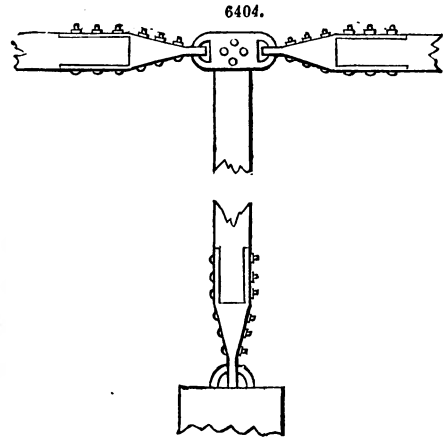

It is obvious that in the above system of rods a very large proportion of the motive force is absorbed by the friction of the various parts, and that consequently only a low efficiency can be obtained. The loss of power from this cause is immense, even when the pit-work—that is, the whole system of pumps and rods—is kept in a perfect condition. But this is an extremely difficult thing to do. Some of the parts are continually getting out of order. Frequent repairs and alterations are needed, and these often necessitate a temporary stoppage of work, entailing much inconvenience and expense. This, added to a heavy first cost, makes the system a very expensive one. When considering the question of cost, it must also be borne in mind that this system requires a large shaft on account of the great space occupied by the pit-work.

Such are the defects inherent in the system of transmitting the motive force by means of rods. As we have already stated, many attempts have been made to supersede this system. One of the most successful is to take the engine underground and to force the water up at one lift. This is

no doubt, a very great improvement, as the loss by friction is reduced to a minimum, and the first cost, as well as the cost of maintenance, is lessened in a very great degree. This system is, indeed, free from most of the defects which we have pointed out in the Cornish pump. It has, however, defects of its own. The engine cannot be used for other purposes at the same time; in the case of metalliferous mines the coal has to be taken underground, and utter failure may result at a most critical time, namely, when a great and sudden influx of water or an outbreak of gas has driven the men out of the workings. Besides this, it is of course open to the objection of being inapplicable in the case of water power. To obviate these difficulties, another plan, a modification of the preceding, has been proposed, and in some instances successfully carried out. This consists in placing the boiler at surface, and conveying the steam down to the pumping engines through felted pipes. Where this system is applicable, it no doubt possesses considerable advantages over the preceding. But it is unsuitable for great depths in consequence of the condensation which must inevitably take place in the pipe; and, like the preceding, it is applicable only in the case of steam power.

Another system, the invention of G. G. André, has lately been introduced as a substitute for the rods, and from experiments recently made seems likely to prove very successful. It consists in transmitting the force developed by the motor at surface to the pump at the bottom of the mine through columns of water. There is, of course, nothing new in the principle of this system. The perfect manner in which force may be transmitted through pipes filled with water has been demonstrated by the well-known hydraulic machinery which owes its origin chiefly to the inventive genius of Joseph Bramah. And we have illustrated on page 1946 of the present work a system in which the employment of columns of water constitutes an essential feature. But all previous systems of this nature, though they have been applied to deep mines with considerable success, have possessed serious defects which have rendered them objectionable. These defects are—a somewhat complicated arrangement of the pumps; violent shocks occasioned by a sudden change of direction; liability of the pressure-pipes to lose water, and so to produce a vacuum beneath the motor-pistons, resulting in violent concussions; and a liability, from the same cause, of the pump-pistons to get displaced, as well as a want of a ready means of restoring the pistons to their position when so displaced. None of these defects exist in Andre's pump.

Pipes.—The pipes constitute an important part of a pump, and frequently represent a large proportion of the first cost. It is therefore essential to economy that they possess no excess of dimensions. The diameter of the pipes composing the rising main or pump-tree, and the thickness of metal, are dependent upon the quantity of water to be raised a minute, and the height to which it has to be lifted, and these must be calculated accordingly. The friction of the water in the pipes, which is one of the sources of a loss of power in a pump, is dependent upon the diameter of the pipes and the velocity of the water. This velocity should never exceed 4 ft. a second. Hence, in determining the dimensions of a rising main, the question of friction must be taken into account. In our article on Pipes we have entered fully into the subject of their manufacture and strength, as well as that of the friction of water, and we must refer our readers to that article for information on these matters. We would remark here, however, that in cases where no air-vessel is used to equalize the flow, the diameter must be calculated for the *greatest* and not the *mean* discharge. For example, suppose a 10-in. pump, worked by a crank, the path of which is 1 ft. in diameter, and the velocity of which is twenty revolutions a minute. The quantity discharged a minute is $78{\cdot}54 \times 12 \times 20 = 18849$ cub. in. $= 67{\cdot}8$ gallons. But during one-half of the stroke, the delivery is nothing, and it is a maximum at the centre of the other half, because the piston has then the velocity of the crank-pin. The path of the crank being 3·1416 ft. in circumference, the discharge at this point is $78{\cdot}54 \times 37{\cdot}7 \times 20 = 59219$ cub. in. $= 213{\cdot}2$ gallons; and it is for this discharge that the pipe must be calculated.

The Air-chamber.—We have already described under Air-chamber the use and construction of this contrivance for equalizing the flow of the water. We shall therefore treat it very briefly here. An air-chamber, by maintaining a constant flow, increases the efficiency of a pump. A single-acting pump, for instance, loses power in consequence of the piston having to set the superincumbent column of water in motion at each stroke. A double-acting pump is in this respect similar to the single-acting; but in a three-throw pump the flow is continuous, and, for this purpose at least, an air-vessel would in this case be a superfluity. But a more important use of a reservoir of air is to relieve the pressure, and so to prevent shocks. In this respect they are a very valuable adjunct to a pump, and they ought to be applied wherever practicable when the pressure is great. By practicable we mean, when no better substitute can conveniently be applied. For we hold that when it can be conveniently adopted, an accumulator in the form of a loaded piston affords a much better means of equalizing the flow and relieving the pressure. The air-chamber possesses the serious defect of requiring, in some cases constant, in others frequent replenishing, in consequence of the absorption of the air by the water. This necessity renders the construction of the chamber more complicated, and consequently increases its liability to derangement. The rapidity with which the air is exhausted in the chamber depends on the pressure to which it is subjected. The temperature is an element in the question; but as the temperature of water at a considerable depth beneath the surface of the ground varies but slightly, it may in this case be neglected. Common air is composed of 21 parts of oxygen and 79 parts of nitrogen; and of these elements, when under the ordinary atmospheric pressure of 15 lbs. to the square inch, water absorbs ·046 of its own volume of the former, and ·025 of its own volume of the latter. Hence it will be seen that when greatly compressed, as it is in an air-chamber, it will be rapidly absorbed by the water. Suppose, for example, the air in the chamber to be compressed sufficiently to exert a mean pressure of 60 lbs. to the square inch upon the walls. The air in this case will be absorbed by the water in the proportions of $·025 \times 4 = ·100$ of its own volume, for the nitrogen, and $·046 \times 4 = ·184$ for the oxygen. Therefore, unless frequently replenished, the action of the chamber cannot be maintained. In consequence of this property of water to absorb air, an air-chamber cannot be applied at all when the

pressure is very great, as in the case of high lifts in mines. Under such circumstances the loaded piston might often be advantageously employed.

To Calculate the Efficiency of a Reciprocating Pump.—We have shown that the load upon the piston of a pump is equal to the weight of a column of water whose base is the area of the piston, and whose height is the vertical distance from the surface of the pool to the point of discharge. The lifting of this weight constitutes the effective work of the pump. To ascertain what proportion this work bears to the total work transmitted from the motor, it is necessary to determine the other resistances which the pump has to overcome, and which may be called *passive* resistances, since they merely absorb force without producing any useful effect. These are;—1, the friction of the piston against the walls of the cylinder or the packing of the stuffing box; 2, the friction of the water in the cylinder and pipes; 3, the contraction of the fluid vein at its entrance into the suction-pipe, and at its passage through the water-way of the valve; 4, the weight of the valve; and 5, the inertia of the mass of water to be set in motion.

Besides the above, there is the resistance due to the friction of the rods, when the latter are employed, and this resistance is frequently greater than the whole of the other passive resistances together. But as it is very variable, depending as it does very much upon the state in which the rods are kept; and as, moreover, it is not common to all reciprocating pumps, we shall leave it out of the question. In determining the passive resistances, it is not intended to give rigorously accurate results; an approximation is all that can be attained to, but the approximation is sufficiently near for practical purposes.

The friction of the piston depends upon the nature of the materials and the pressure of the water. When the leathering consists of a simple cup-leather, its upper edge being pressed against the walls of the cylinder by the column of water resting upon it, the pressure is proportional to the height H. Also in other cases, and in general, the packing has to be tightened as the pressure increases, so that the friction still remains proportional to H. This proportion has been found by careful experiment to be about ·06 of the weight of the superincumbent water when the piston is in a good condition.

The friction of the water in the rising main of a pump is very nearly the same as that of the water in an ordinary water-pipe, and may therefore be found with sufficient accuracy from the formula $H = \frac{G^2 \times L}{(3\,d)^5}$, in which H is the head of water in feet due to friction, G the discharge during the effective part of the stroke in gallons a minute, L the length of the pipe in feet, and d the diameter of the pipe in inches.

The height due to the velocity of flow through a contracted passage is given by the formula $H = \left(\frac{G}{d^2 \times 13}\right)^2$ in which the letters have the same signification as above. Hence the resistance due to the contracted passages will be represented by $\left(\frac{G}{d^2 \times 13}\right)^2 + \left[\left(\frac{G}{d'^2 \times 13}\right)^2 - \left(\frac{G}{d^2 \times 13}\right)^2\right]$ d^1 being the diameter of the second contraction.

At the beginning of the up-stroke of the piston, when the water presses against the lower face of the sleeping valve, it meets with a resistance due to the weight of the valve. To overcome this resistance a force at least equal to this weight must be exerted against the lower face of the valve. To determine the height of the column of water representing this force, let us take, for greater generality, the case of a clack. Let W be the weight of the valve in lbs., l the distance of its centre of gravity from the axis of rotation, s the area of the water-way, l^1 the distance of its centre from the same axis, and x the height sought, the measurements being in feet. W l will be the moment of the resistance due to the weight of the valve, and $62{\cdot}4\ s\ x\ l^1$ will be that of the opposing force. And since the two forces must be equal, we shall have $W\ l = 62{\cdot}4\ s\ x\ l^1$. Deducing from this equation the value of x and multiplying it by $62{\cdot}4\ \pi\ D^2$ to find the force to be exerted by the piston, we get $\frac{W\ \pi^1\ D^2\ l}{s\ l^1}$. If the valve when closed instead of being horizontal makes an angle θ with the horizon, this expression must be multiplied by cos. θ. With a spindle-valve covering a circular orifice of diameter d, we shall have simply $W\ \frac{D^2}{d^2}$; and this value will be sufficiently exact for all practical purposes for both kinds of valves. As the valve has to be held open during the whole of the stroke, this force may be considered to be exerted during the whole of the time the piston is ascending.

The inertia of the water, which we have given as one of the resistances to be overcome, seldom occasions a loss of power, because usually the motion of the piston is regulated in this respect by the machinery to which it is connected. For instance, if it is driven from the crank of a wheel possessing a uniform motion, it starts from a state of rest with the water which it drags after it; it rises at first with an accelerated motion, and the acceleration gradually decreases until at the middle of the stroke it becomes nothing. The velocity is then retarded until it becomes nothing at the top of the stroke. During the first half of the stroke, the motion has acquired an accelerating force diminishing progressively, and during the second half a retarding force increasing according to the same progression, and sufficient to entirely destroy the effect of the former. Thus, what it has been necessary to take from the motive force employed to overcome the inertia of the mass raised during the first portion of the stroke, will be given back by the inertia of this mass to the same force during the second half; and therefore the inertia will not have occasioned any loss of force.

We will now show the application of the above principles and formulæ by means of an example. Let it be required to determine the sum of the resistances in a single-acting sucking pump, making twenty effective strokes a minute, and having the following dimensions;—Diameter of barrel. D = ·75 ft.; length of barrel, L = 5 ft.; diameter of suction-pipe, d = ·5 ft.; length of

suction-pipe, $L^1 = 20$ ft.; when $L + L^1 = H = 25$ ft.; length of stroke, $l = 4$ ft.; weight of sleeping valve, $W = 2$ lbs.

In this case the discharge is 220 gallons a minute. But as the pump is discharging during one-half of the time only, namely, during the up-stroke, this quantity must be double in calculating the resistances.

Weight of the column of water to be lifted $= 62{\cdot}4\ \pi^1\ D^2\ H$	=	686·25 lbs.
Friction of the piston $= 686{\cdot}25 \times {\cdot}06$	=	41·17 „
Friction of the water in the pipes (neglecting the barrel) $= H = \frac{G^2 \times L}{(3\ d)^5}$	=	24·46 „
Resistance due to contraction and velocity in suction-pipe $= H = \left(\frac{G}{d^2 \times 13}\right)^2$	=	11·17 „
Resistance due to weight of valve $= W \frac{D^2}{d^2}$	=	4·45 „
Total resistance	=	767·50 lbs.

The loss of power is thus about 11½ per cent. In the above case the diameter of the valve orifice is the same as that of the suction-pipe; consequently there is but one contracted passage.

Centrifugal Pumps.—Centrifugal pumps, as we have already stated, are merely water-fans, and therefore the principles which apply to a blowing machine will, with slight modifications, be equally applicable to a centrifugal pump. Fig. 6405 shows the action of one of these pumps. Supposing the pump to contain water, and the revolving disc of blades to be set in motion in the direction of the inner arrows, the water in the channels between the blades, as well as that between the edges of the blades and the outer casing or box in which they revolve, will be driven in the directions shown by the middle and outer arrows, and will thus be constrained to pass out through the opening provided for that purpose. The force with which the water flows out will obviously be equal to the centrifugal force developed by the revolving disc, which force is dependent on the velocity of revolution. As the water flows away from the centre a partial vacuum tends to form there, and this brings up the water from below. The height of suction should be small; for if the discharge due to the velocity of the blades is greater than the supply through the suction, the pump of course gets out of water and ceases to work. Wherever possible, it is better to avoid suction altogether, by placing the pump beneath the level of the water to be raised.

6405.

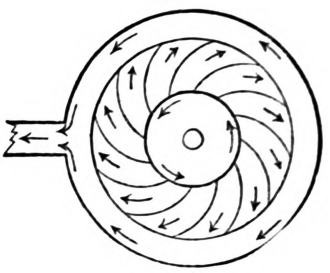

The form of the revolving blades or vanes has a great influence upon the efficiency of the pump. Originally they were made straight and affixed to the centre radially. But Appold, by the adoption of the curved form, more than doubled the efficiency. Other details of construction also materially affect the work of a centrifugal pump. As, however, these questions have been discussed, and some of the most approved models fully described under Hydraulic Machines, we must, to avoid repetition, refer the reader to that article for further information concerning the actual construction of this kind of pump.

As the height to which the water will ascend in the delivery-pipe is due to the centrifugal force developed by the revolving blades, it is evident that this height can never be great, and also that the velocity of revolution must in every case be considerable. Some cases have been recorded in which, by means of a very high velocity, a height of upwards of 50 ft. has been reached; but such heights are only the result of curious experiments. Practically, 20 ft. may be considered as the limit. The force with which the water ascends being equal to the centrifugal force, we have as the expression of the work done, $W = \frac{\omega^2 r^2}{2g} \times P = \frac{P v^2}{2g}$ P being the weight of the particle of fluid transferred by the centrifugal force from the axis of rotation to the extremity of the radius r, ω the angular velocity, and v the velocity of the extremity of the blades. Also, if we make P = the weight of water passing a second, and V the velocity at the end of the blades in feet a second, we have, neglecting the loss by friction and other causes, $W = \frac{P V^2}{2g}$. In the best pumps this loss is about 35 per cent.; multiplying the preceding expression by ·65, we have $\frac{{\cdot}65\ P V^2}{2g}$ = the effective work. Hence $H = \frac{1}{2g} \times {\cdot}65\ V^2 = {\cdot}0155 \times {\cdot}65\ V^2 = {\cdot}01 V^2$. If it be desirable to introduce the number of revolutions into the formula, we have, as already given, $V = \frac{2 \pi r n}{60}$; whence $H = {\cdot}0012\ r^2 n^2$

Appold gives the formula $V = 550 + 550 \sqrt{H}$.

The proper proportioning of the several parts of a centrifugal pump is a matter of great importance. J. Glynn gives the following as the most suitable dimensions;—Let r represent the external radius of the blades or radius of revolution; v the surface velocity of the blades, which must be proportioned to H the maximum dynamic head of water to be overcome, and which consists of h the height to which the water is to be delivered above the lower level, h' the height due to the velocity of delivery, and h'' the head due to friction and other resistances in the machine.

Then $\frac{v^2}{2} = \text{H} = h + \frac{\text{V}^2}{2g}\left(1 + \Sigma f\right)$, V being the velocity in the rising main Σf, the sum of the several resistances; and the surface velocity of the blades is $v = \sqrt{\left(2h + \frac{\text{V}^2}{2}\left(1 + \cdot 025\frac{h}{d}\right)\right)}$, d being the diameter of the pipe. When the pipe is not vertical its length l must be substituted for h. Taking the diameter of the rising main as unity, in proportioning the pump, let $r = \frac{7}{4}d$; the radius of the cars of the pump $= \frac{3}{4}d$; the breadth of the blades $= \frac{3}{4}d$ nearly; the diameter of each of the indraught passages $= d$, and the mean radius of the casing of the pump $= \frac{7}{4}d \times \frac{v}{\text{V}}$.

The power required to drive a centrifugal pump, and to raise a given weight of water W, a minute, is, taking the efficiency as 50 per cent., and only the best pumps exceed this,

$$2\,\text{W}\left(h + \frac{\text{V}^2}{2g}\left(1 + \cdot 025\frac{l}{d}\right)\right).$$

The diameter of the rising main and suction-pipe usually adopted is as follows for the sizes given;—

Number of gallons a minute ..	25	70	150	300	500	1400
Diameter of suction-pipe	2	4	5	6	7	8
Diameter of delivery-pipe	1½	3	4	5	6	7

One of Appold's centrifugal pumps 1 in. in diameter, and making about 6500 revolutions a minute, will discharge 10 gallons of water, while a 12-in. pump, having the same velocity at the circumference, that is, making $\frac{1}{12}$ the number of revolutions, will discharge 1440 gallons a minute, being according to the square of the diameter and not according to the cubic contents. Experiments have shown that the 12-in. pump will raise the water without discharging any, 1 ft. high with 159 revolutions, 4 ft. with 318, 16 ft. with 636, and 64 ft. with 1272 revolutions a minute.

The following Table giving the mean results of various experiments with Appold's 12-in. pump furnishes important information;—

Number of revolutions a minute of 6-in. drum and pump.	Number of gallons raised 5 ft. 6 in. high a minute.	Equivalent in lbs. raised 1 ft. high a minute.	Strain in lbs. on a drum of 4 ft. diameter driving one of 6 in. diameter, as measured by a dynamometer.	Equivalent strain on the steam-engine rated in lbs. raised 1 ft. high a minute.	Percentage of work done compared with power expended.
400	500	27,500	74	44,400	61·7
412	600	33,000	80	49,440	66·7
427	700	38,500	87	55,723	69·
440	800	44,000	94	62,010	70·9
453	900	49,500	100	67,950	72·8
474	1000	55,000	106	75,366	72·9
481	1100	60,500	113	81,479	74·2
495	1200	66,000	118	87,615	75·3
512	1300	71,500	121	94,017	76·
535	1400	77,000	126	101,115	76·1
563	1500	82,500	134	113,163	72·9
580	1600	88,000	138	120,060	73·3
595	1700	93,500	142	126,733	73 6
607	1800	99,000	150	136,575	72·5

The efficiency of this pump, as shown by the results tabulated above, is unusually high. The majority of centrifugal pumps do not give a higher percentage than 50.

The Chain-pump.—The chain-pump consists essentially of a rectangular case or pipe, through which an endless chain works, bearing at intervals a rectangular plate of wood of slightly smaller dimensions than the inside of the pipe, and arranged to stand horizontally as it passes up through the pipe. Fig. 6406 represents one of Murray's chain-pumps, the most commonly employed in this country. The chain passes under a roller at the foot, and over a small pitch-wheel A at the top, by which it is driven through the medium of suitable gearing. The lifts C feather in passing over the wheel to the descending side, and unfold when brought round to the foot of the pipe on the ascending side. Thus the pump is enabled to take off the water with the same dip as other pumps. As will be seen by the figure, the lifts carry up the water above them in the pipe and discharge it into a trough at the top. To avoid friction, these lifts are made to work freely in the pipe or barrel, a play of about ¼ in. being left between their edges and the barrel. Thus there is a certain amount of slip; but as the chain is driven at a considerable velocity, this amount is not great. Experiments made by Lovick for the London Metropolitan Board of Works showed the slip to be about 20 per cent. The ordinary speed at which the chain is

driven is from 200 to 300 ft. a minute. From 10 to 12 ft. apart has been found to be the best pitch for the lifts; putting them nearer needlessly increases the complexity of the pump. This pump, which is remarkable for its simplicity, is very effective up to a height of 50 or 60 ft.

6406.

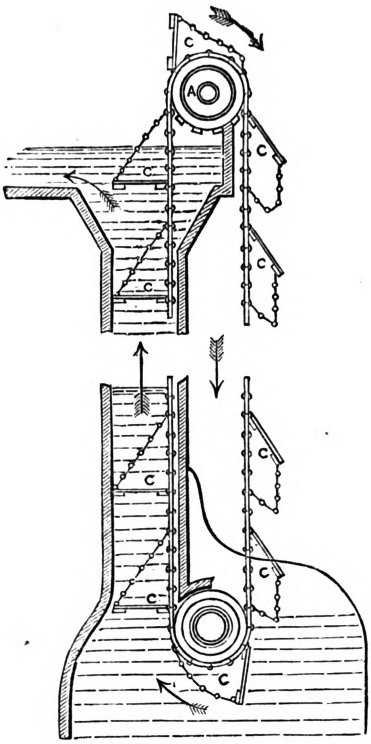

6407.

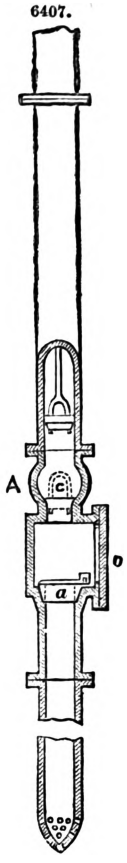

6408.

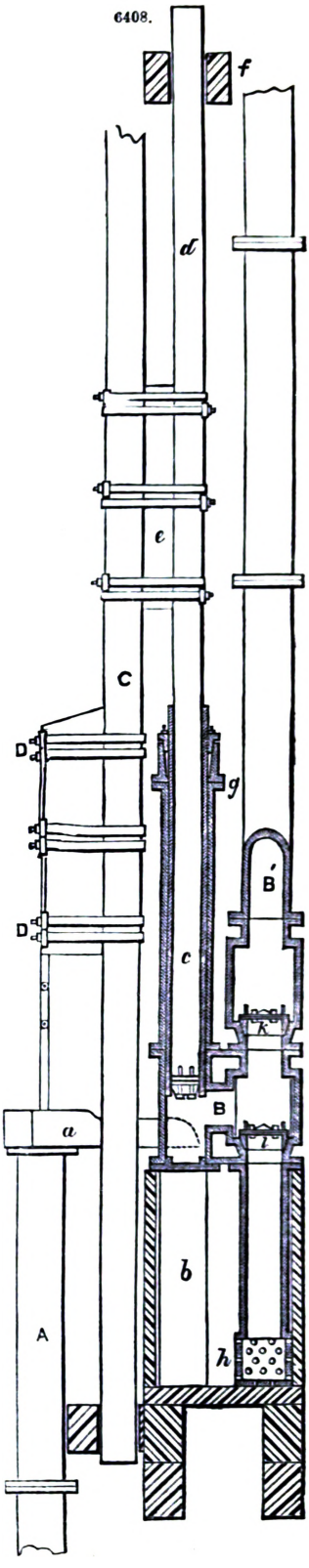

Lovick's experiments showed its efficiency to be about 63 per cent. of the indicated horse-power of the engine working it. One great advantage possessed by this kind of pump is its freedom from the liability of being choked.

Pumps for Draining Mines.—One of the most important uses to which a pump may be applied is the removal of water from the workings in mines. The carrying on of the whole of the underground operations is dependent on the several points of development being kept free from the water that is continually issuing from the water-bearing strata driven through, and the nature of these operations is such that pumps alone are available as the means of drainage. Hence it is essential that the pumps applied to this purpose should be capable of raising the maximum quantity of water entering in a given time, and be free from all liability to derangement. The circumstances, however, under which a pump so applied has to work is very unfavourable to the fulfilment of these conditions. The motor being situate at surface, and the pump at a great distance beneath it, the force developed by the former has to be transmitted to the latter through ponderous connecting rods of great length, as in the Cornish system of pit-work. Or where other systems are adopted, there yet remains a long length of water-pipes exposed to great pressure and frequent shocks, as well as to the strong corrosive action of water charged with various mineral substances. Thus the same degree of efficiency, with the same immunity from derangement, is not to be looked for in a mining pump as in one established in more favourable situations, and this fact must be borne in mind when estimating the merits and demerits of any system of mine-pumping.

The Cornish system was, until very recently, the only one applied to mining purposes. It consists, as we have already said, in having a pump at each level, and in working the whole of them simultaneously from one main rod. Figs. 6407 to 6409

show the details of this system. Fig. 6407 is the first or lowest lift, and is always of the lifting or common bucket kind. The reasons for the adoption of this kind for the bottom lift are—the facility with which it may be lowered as the shaft is sunk deeper, and the liability of the bottom lift to be drowned by a rise of water in the well, consequent on a stoppage of the pump for alterations or repairs. If a plunger-pump were used in this case, a rise of a few feet would cover the whole of its valves and working parts, and so render them inaccessible for repairs before the water was got under. But the bucket of a lifting pump can always be drawn up to the top of its rising main A, Fig. 6408, above which the water is not likely to rise before it is mastered. And as there is a contrivance for remedying, from the same level, any defect in the sleeping valve beneath the piston, the perfect working of the pump is secured until the water is lowered to its accustomed level. To enable the bucket to be drawn up readily. the rising main is about an inch larger in diameter than the working barrel, and the latter is made trumpet-mouthed at the top to facilitate the entrance of the bucket when lowered from above. The clack-valve *a* is accessible, when the level of the water permits, by a door *b*. When, however, the water rises above this door, and the valve *a* gets out of order, the contrivance alluded to above must be resorted to.

6409.

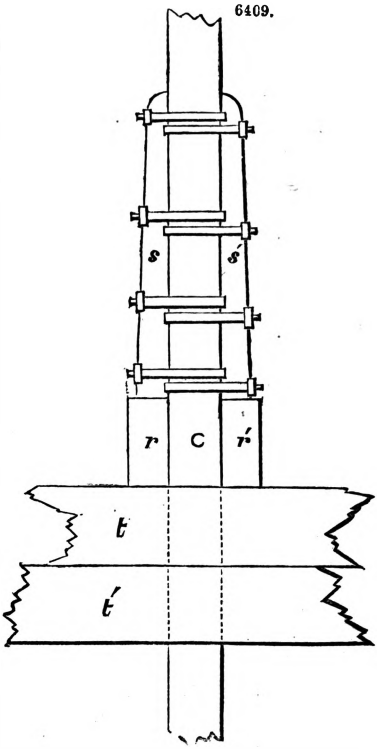

In the clack-piece below the barrel at A, the bore of the pipe is contracted at *c* to a size a little smaller than that of the working barrel, and thus made slightly conical. A drop-valve made to fit this bore may then be dropped down through the pipe and barrel to its seat, as shown in the figure in dotted lines. The action of the pump may be continued by means of this temporary valve until the water has been sufficiently lowered to render the fixed valve *a* accessible. The drop-valve is provided with a loop or handle, to enable it to be easily drawn up.

The bucket-rod passes up the rising pipe A, Fig. 6408, and is fixed to the main rod C by means of a set-off and iron straps D. In this lift, the water is raised by the up-stroke of the rods through the pipe A, whence it is discharged by the trough or collar-launder *a* into the cistern *b*.

The second lift is a plunger-pump, and it takes its water from the cistern *b*. As this cistern receives the water which drains into it from the level on which it is placed, the second pump must be of larger capacity than the first; and this is the case with each lift in succession. Fig. 6403 is a section of one of the plunger-pumps. The plunger *c* is driven upon the wooden rod *d*, or, as it is technically termed, pole, and made tight by wedging into the bottom end. This pole is fixed to the main rod C by means of a set-off *e*, and iron straps and nuts. A guide *f* keeps the pole in a true line with the axis of the barrel, or, as it is called in Cornwall, pole-case.

When the plunger ascends, the water is sucked in through the wind-bore *h* and valve *l* into the double pipe or H-piece B, whence it is expelled by the descent of the plunger through the delivery-valve *k*, and rising main B', which conducts it up to the cistern on the next level above. As all the other lifts are precisely similar to this one, they need no description. The height of each lift is usually from 30 to 40 fathoms. The main rod, as already described, works through guides fixed at intervals down the shaft, and that the friction of the rod against these guides may not be excessive, the former must be well made, firmly put together, and truly hung. At the top it is hung to the gudgeon of the outer end of the engine beam, or to the arm of a double V-bob, as shown in Fig. 6403. The excess of weight above what is required to raise the water is taken off by means of balance-bobs, as shown in Fig. 6402. At intervals down the shaft side pieces are strapped to the main rod, as S, S', Fig. 6409; these serve a double purpose. Their primary use is to prevent the rods from descending too far, and so causing injury to the pumps and to the engine. When the rods have descended sufficiently low, the side pieces come to rest upon the blocks *r*, *r'*, which are supported by the timbers *t*, *t'*, let into the sides of the shaft. But another important use is to prevent the rods from falling down the shaft in case of fracture; for should the main rod break at any point, the portion below the rupture would be supported upon the blocks, and thus incalculable mischief would be averted.

The joints of the pipes are always flange-joints. To render the joint water-tight, a ring of lead or wrought iron, which has been previously wrapped round with a piece of common woollen cloth, and afterwards dipped in tar, is inserted between the flanges. The joint thus formed is very sound and durable, and it admits of being taken apart with the greatest facility.

To preserve the pipes from the corroding action of the mineral water, it is usual to line them with a thin casing of wood. The mode of putting in the wood is to place it in the form of staves, like those of a cask, round the interior of the pipe, leaving a small space between the last and the first inserted. Two wedges are then driven into this space from the two ends of the pipe by simultaneous blows of a hammer. This simple operation is sufficient to keep the lining firmly in its position.

The system of pump which we have been describing is in some respects very suitable for the purpose to which it has been almost exclusively applied, namely, the draining of mines. It possesses no delicate parts, and it is of so simple a nature that any alterations or repairs may be effected by the most inexperienced hands. This is an important advantage in a mining pump.

Another advantage claimed for it is the ability to take the water from each of the levels or stages in a mine. This advantage, however, has its compensating defect in the additional number of pumps required, and the greatly increased friction resulting therefrom. Beyond this the system has little to recommend it; its first cost is great, and the cost of its maintenance is also great. The ponderous rods require constant attention and frequent repairs; they occupy a large portion of the space in the shaft; they must be counterweighted by balance-bobs, placed in cavities excavated horizontally in the sides of the shaft—a very expensive situation—and they are the source of great loss of power from friction. Also the mode of working the pumps by raising the rods and using their weight to force up the water is false in principle. It is lifting a heavy weight in order that by its fall it may bring up a less one. This may be the best mode of working the Cornish system of pumps; but it is working at a loss nevertheless. That there may be no hitch in the working in consequence of obstructions, the excess of weight to be lifted must be considerable. Thus the total amount of loss from friction, and other causes, constitutes a very large percentage of the motive force. And as in the case of steam power the loss of motive force is represented in the fuel consumed, this loss forms an important item in the cost of working. When water power is employed, one-half of the effective power of the wheel is lost altogether when, as is often the case, only one set of pumps are driven from the wheel. As the crank by which the main rod is raised works through only one-half of its revolution, the whole of the water expended during the other half of its revolution is sheer loss; and this loss is in addition to that from friction and the other causes alluded to above. Another disadvantage of the system is the difficulty of changing the direction of the motion. The multiplication of V-bobs is attended with great inconvenience and loss of power, and beyond a very slight degree is impracticable. This difficulty of changing the direction often necessitates the sinking of a shaft in a direction suitable for the pit-work rather than in that which is more favourable in other respects. These defects render the system of pumping by means of rods a very imperfect and expensive one; and the desirability of substituting for it a more efficient system has led to the introduction of several others to which we have already referred.

Underground pumping-engines are represented by the "Special pump" manufactured by Tangye Brothers, and the "Universal Pump," invented by E. Cope and J. R. Maxwell, of Ohio, and made by Hayward Tyler and Co. Both of these are of very simple construction and of great power. Fig. 6410 is a longitudinal section through Tangye's Special pump. A represents an ordinary steam-

6410.

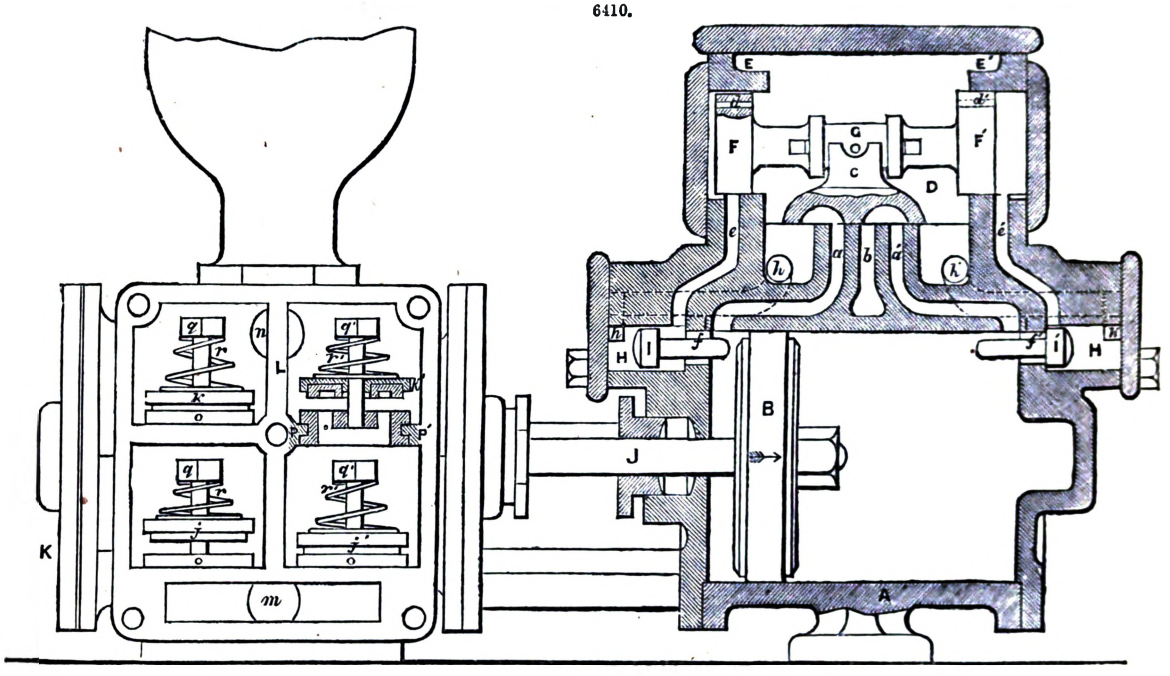

cylinder provided with a piston B. Steam is admitted to this cylinder through ports *a*, *a'*, and it exhausts through the port *b*; and these ports are opened and closed by the action of the slide-valve *c*, which is of the ordinary construction, and which may be so arranged as to admit steam under the valve, as in the figure, or which may be constructed in any other suitable manner. This slide-valve is seated on the bottom of the steam-chest D, the ends of which form small cylinders E, E', bored out to receive small pistons F, F', which are connected to each other by a rod G, and this rod is provided with two collars to straddle a standard *c* which rises from the back of the valve. Small channels *d*, *d'*, passing through the pistons F, F', form a communication between the interior of the steam-chest and the outer ends of the supplementary cylinders E, E', so that the small pistons are exposed to a uniform pressure of steam from all sides. The supplementary cylinders E, E', communicate through channels *e*, *e'*, with chambers H. H', in the cylinder-heads, and communicate with the interior of the main cylinder A by means of openings *f*, *f'*; these chambers are bored out to receive piston-valves I, I', the stems of which project through the openings *f*, *f'*, into the main cylinder A, and they communicate by means of channels *h*, *h'*, with the interior of the steam-chest D;

the channels being so situate that the outer ends or heads of the piston-valves I, I', are continually exposed to the pressure of the steam which fills the valve-chest. By this pressure the piston-valves are forced towards the inner ends of the chambers H, H', whenever the inner ends of these chambers communicate with the exhaust end of the cylinder, and in this position the piston-valves close the channels *e*, *e'*, leading to the supplementary cylinders F, F', as shown in the figure, where the valve I' is represented in position to close the channel *e'*, the main cylinder being represented to take steam through the port *a*, and to exhaust through ports *a'*, *b*. As the piston reaches the end of its stroke it comes in contact with the end of the stem of the valve I', which it pushes out into the chamber H', the channel *e'* is thrown open, and the outer end of the supplementary cylinder E' is brought in communication with the exhaust-port *b*. By these means the equilibrium of the small pistons F, F', is disturbed, and the steam acting on the outer head of piston F, causes these pistons, together with the valve, to change their position. The motion of the main piston is reversed, and as soon as that end of the main cylinder containing the piston-valve I is brought in communication with the exhaust-port *b*, the live steam pressing on the outer head of that piston-valve causes the same to fly in and close the channel *e*. In the meantime, the steam passing through the small channels *d*, *d'*, in the supplementary pistons F, F', restores the equilibrium of the small pistons until the main piston, by coming in contact with the stem of the valve I, produces the subsequent change.

The steam-piston B connects by a rod J with the pump-piston which works in the cylinder K. By placing the mechanism for changing the steam-valve in the interior of the steam-cylinder, the piston-rod J can be made very short, and the two cylinders A and K can be brought close together. The pump-cylinder K is provided with a valve-chamber L containing four valves *j*, *j'*, *k*, *k'*, and communicating with the ends of the cylinder through channels, with the suction-pipe through an aperture *m*, and with the delivery-pipe through an aperture *n*. All these channels and openings are exposed by removing the bonnet, so that they can be readily kept clean, and the correct operation of the pump ensured with little trouble.

The valves *j*, *j'*, *k*, *k'*, are constructed of discs, which are provided with annular recesses to receive a packing of india-rubber or other elastic material; this packing projects beyond the face of the valve, as shown in the figure, and if the valve comes down on its seat the packing forms a tight joint, and the valve is prevented from coming in metallic contact with its seat on account of the incompressibility of the rubber or other packing confined in its recess. The seats *o* are cast of brass or other suitable material independent of the pump, and they are faced off and then cast into the lining, so that they require no further attention when the pump casting is received from the foundry. In order to retain the seats firmly in their places, they are provided with grooves P, P', in their peripheries. The cast iron which composes the pump runs into these grooves and retains the seats. The valves *j*, *j'*, *k*, *k'*, are held in the proper position in relation to their seats by pins *q*, *q'*, which screw into the centres of the seats; and, if desired, springs *r* may be applied to hold the valves down upon their seats.

The play of the pump is very simple, and will be readily understood. When the steam-piston moves in the direction of the arrow, the valve *j* opens to admit water from the suction-pipe, and the water in front of the pump-piston is forced out through the valve *k'* and through the delivery-pipe. When the steam-piston moves in the contrary direction, the valves *j'* and *k* open and the valves *j* and *k'* close. The pump constructed for the Adelaide Collieries at Bishop Auckland, has a steam-cylinder 26 in. diameter, and the pump, which is double-acting, is 6½ in. diameter, with a 6-ft. stroke. The engine-room is situate at a depth of 1040 ft. beneath the surface. It is an arched chamber, 100 ft. long by 20 ft. broad, and 10 ft. high at the centre. The boiler, which is double-flued, 27 ft. long and 7 ft. in diameter, is erected at the far end of this chamber, and the pump is placed between the boiler and the shaft. Thus the height to which the water has to be raised is 1040 ft., and this is done in one lift at the rate of 130 gallons a minute.

The Universal pump may be taken as the representative of the system of working the engine underground by steam conveyed through felted pipes from the generator at surface. Of course, this is not an essential feature in the Universal pump. If it will work with steam conveyed from surface, it will work with steam generated in an engine-room under ground, as in the case of the Special pump. But it has been largely applied in this system, and is widely known in connection with it. Fig. 6411 is an elevation of one of these pumps. It is remarkable for the extreme simplicity of its parts. As in the Special, the only portion of the mechanism exposed to view is a few inches of the piston-rod between the steam and pump cylinders, and this portion is protected from blows by a half-cylindrical casing. Another remarkable feature is its compactness. A pump with a 15-in. steam-cylinder and a 12-ft. pump-cylinder, capable of raising 28,000 gallons an hour, occupies a space of only 8 ft. 4 in. by 3 ft. 1 in., the weight of such a pump being only two tons. This is a great advantage in all cases, but especially in mining operations, and as they are self-contained, they require but little foundation. These qualities render them peculiarly suitable for placing in the workings, as they occupy little space, and may be easily moved forward as the heading advances.

The essential feature of the Universal pumping engine consists in having a cylinder and piston so suited to each other that the piston will perform the functions of a valve in opening and closing the ports of the inlet and exhaust passages. This is accomplished by making the piston as much longer than the stroke as is required to cover the steam-ports at each end and exhaust-apertures in the centre of the cylinder lengthwise alternately at the same time when in operation. Besides this, there is an arrangement of steam-passages to the interior of the piston, in which a piston-valve is so arranged with its steam-passages and cavities as to properly communicate with the passages in the piston to change and direct the flow of steam alternately to each end of the cylinder for the purpose of producing the reciprocating movement of the piston without external valve-gear. The nature and construction of the various parts will be better understood by reference to the accompanying figures.

Fig. 6412 is a longitudinal sectional view through the steam-cylinder and pump; Fig. 6413 is a plan showing the steam-cylinder and piston in section, and the pump with air-vessel

6411.

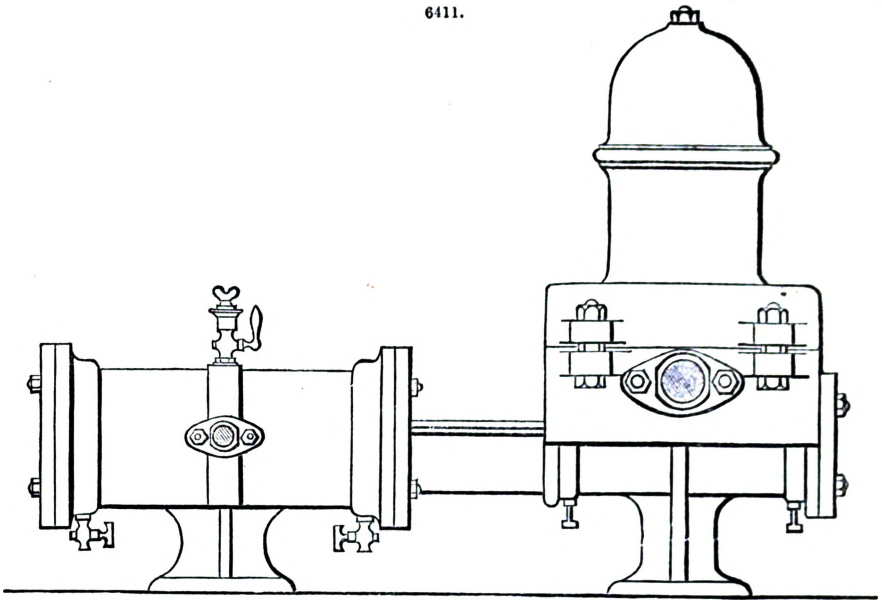

6412.

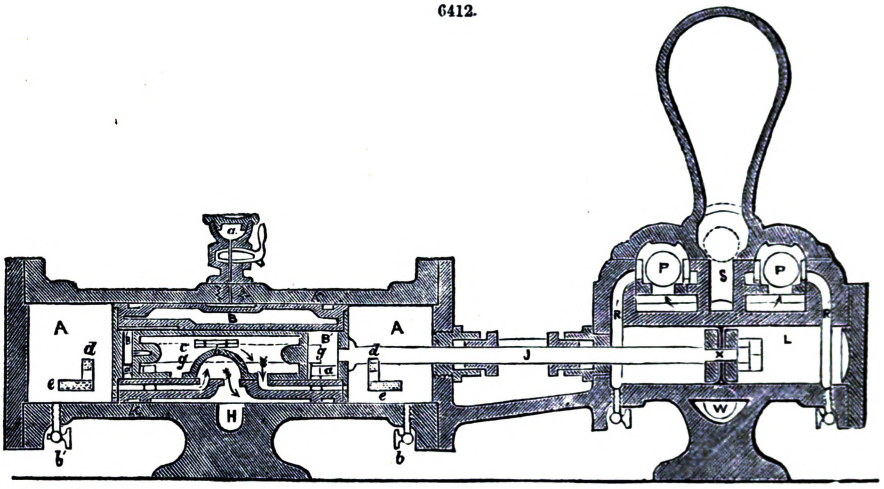

6413.

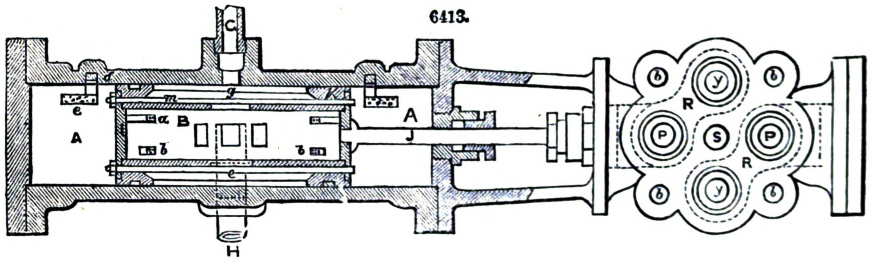

removed; Fig. 6414 is a transverse section of the steam-cylinder, piston and valve. A A is the steam-cylinder, B the piston, and C the piston-valve within it. G is the steam inlet pipe, and H the exhaust-pipe; *m*, *m*, are rods connecting the covers I, I, of the piston; *k*, *k*, springs surrounding the ends of the piston; *a'* is a lubricating cock, and *b'*, *b'*, are drain-cocks; *o* and *n* are guide-pins for preventing rotary motion in the piston-valve and piston. The action of the steam in the cylinder and the working of the piston is as follows:—Steam enters through the inlet-pipe G, Fig. 6414, and has constant access to the interior of the piston through the aperture *d* and the elongated slot *g* in the side of the piston. It also enters the interior of the piston-valve through the rectangular

opening A, which is in constant communication with the inlet-pipe. It should be remarked that this aperture is made above the centre of the piston-valve in order that the steam may exert a pressure downwards greater than in any other direction, and thereby cause the bottom surface of the piston-valve to slide steam-tight. The steam passes down the ports and passages, as shown by the arrow, and thereby has access to one end of the piston, causing it to make a stroke. On or near the termination of the stroke, the piston causes the elongated slot *g* in its side to pass over the opening *d* in the side of the cylinder, communicating by a passage with the opening *e*, over which passes, simultaneously with the latter, an orifice and passage *a* in the piston leading directly to the inner chamber wherein the piston-valve works. Hence the steam gets access to the back of the piston-valve, and forces it to the opposite end of its traverse; the steam on the opposite side having at the same time free access to the exhaust-pipe through the passage *b b* in the piston, similar to the passage *a* before mentioned, which passage *b b* passes over a corresponding aperture *c'* in the centre of the length of the cylinder. Thus the piston-valve, on the principle of the D-slide, changes the direction of the steam, at the same time opening the exhaust communication, and causing the piston to make a return stroke, the steam escaping, as shown by the arrows, down through the aperture and the exit-pipe H. A certain amount of lead is given to allow the steam to exhaust before steam enters on the other side. This is accomplished by permitting the passage *c'* to communicate with each exhaust-passage leading to the back of the piston-valve a little before the slot *g* covers the aperture *d*.

6414.

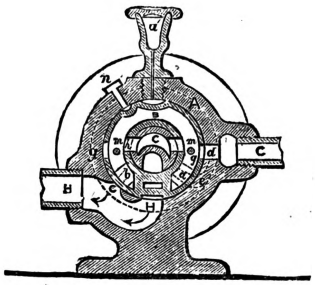

6415.

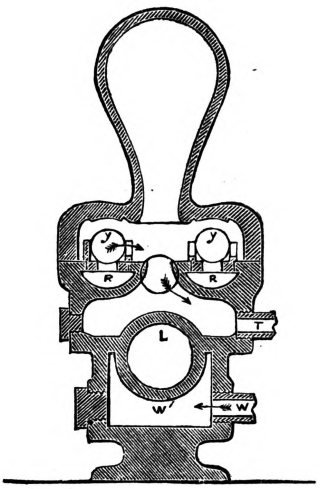

Fig. 6415 is a transverse section of the pump, a longitudinal section of which is shown in Fig. 6412. A suction-pipe W is affixed either side of the chamber W', as may be necessary, a portion of which chamber is below the barrel of the pump, and communicates by passages outside and surrounding both sides of the barrel with the suction-valves P, P, from where it has access to either end of the pump. The water is thence forced up the passage R' and through the passage R, the latter of which has a diagonal and horizontal direction leading to the delivery-valves *y*, *y*, whence it enters the chamber S. To this chamber a discharge-pipe T is affixed, capable of being used on either side to suit convenience. This arrangement of the water-passages and valves, so that the suction and delivery pipes can be attached to either side of the pump, allows the valves to be got at for repairs or other purposes without breaking and renewing pipe-joints.

This pump works with remarkable ease, on account of there always being a cushion of steam at the instant of reversal, both in the case of the valve and the main piston. It is readily erected and as readily removed; it occupies but little space, does not easily get out of order, and altogether may be taken as a good example of the system of underground pumping engine at present existing. The defects inherent in this system we have pointed out already when considering transmission of motion.

André's system of mine pumping machinery, manufactured by Sara, of Penrhyn, Cornwall, is shown in Figs. 6416 to 6418. Fig. 6416 is a side elevation, and Fig. 6417 is a plan, of the pump as fixed in the mine.

Two columns of water of equal height, and therefore balancing each other, communicate through the pipes C and D, called the pressure-pipes, with the interior of the cylinders E and F. These columns press by their weight upon the rams G and G' working through stuffing boxes in the cylinders E and F, and as the rams are connected outside by the rods R, R, they are held in equilibrio by that pressure. The continuation of these rams is of larger diameter, as shown at H', and works through stuffing boxes in the pump-cylinders or working barrels I, J. These barrels are provided with suction and delivery valves in the usual way. It is evident that if pressure be applied alternately to the columns C and D, a reciprocating motion will be communicated to the rams G and G', and thence to the plungers, which are merely continuations of the rams. Suppose, for example, pressure applied to the column D. The ram G' in cylinder F is forced back and the plunger H' expels the water contained in the working barrel I through the delivery-valve and up the rising main P. At the same time, the ram in cylinder E is drawn in by the rods R, R, and the plunger G sucks the water into the barrel J, the pressure-column C rising with the return of the ram. When the stroke is completed, the pressure is transferred to the other column C, and the same effects are produced in the contrary direction. Thus the pump is double-acting.

One mode of applying pressure to the columns is shown in Fig. 6418. Two cylinders, A and A', of the same diameter as the ram-cylinders E, F, are connected with the upper ends of the pipes C and D by a trumpet mouthed connection of the form of the contracted vein. These cylinders, called motor-cylinders, are placed vertically in the figure, in order to show the arrangement more clearly, but in practice the horizontal would in most cases be a more convenient position. Two plungers, B and B', work through stuffing boxes in these cylinders from a two-throw crank R and R'.

Thus it will be seen that the whole of this machinery is of a very simple character. The great difficulty, however, with a pump of this nature is to keep the pressure-pipes quite full of water,

and also to preserve an equal quantity in each of the pressure-cylinders E and F. For if the pipes are not always full, violent shocks will be occasioned by the plungers B and B′ not meeting with water at the beginning of their stroke; and if from leakage one pipe has less water in it than the other, the rams in the cylinders E and F will be displaced in the direction of that pipe, and so endanger the machinery. This difficulty has been the chief cause of the failure of all previous attempts in this direction. In the system we are describing, this difficulty has been overcome in several ways. One of these is shown in Fig. 6418. The motor-cylinders are in constant communication with a reservoir-cylinder N, through the pipes *u* and *u′*. These pipes are provided with valves or cocks *v*, *v′*, worked by hand; for the purpose of cutting off the communication when necessary. A ram-piston Q works in the reservoir-cylinder through a stuffing box, and is loaded to the proper pressure to the square inch, which has been found requisite to work the pump, the weight W being suspended from the cross-head *c* by the rods *t*, *t′*. As the water in the motor-cylinders is in constant communication with that in the reservoir N, any leakage that may occur in the pressure-pipes or the pumps is instantly replaced. Consequently the pipes must be always full, and as no inequalities can possibly occur, the rams in the cylinders E and F cannot be displaced. As an additional safeguard, however, in view of a displacement occurring from other causes, such as an accident to any part of the machinery, a contrivance has been provided for signalling the derangement and restoring the equality. Upon one of the connecting rods R, Fig. 6417, are two levers or hammers *h* and *h′*, held up by springs against stops on the rod R. If the rams get out of their normal position, the hammer *h* or the hammer *h′* will strike the bell *k* at each stroke until the derangement has been remedied. This is effected by means of the valves *v*, *v′*, Fig. 6418, and a discharge-cock on each of the motor-cylinders. These discharge-cocks are not shown in the drawing. Suppose the pump-rams to be displaced in the direction of the pressure-pipe C in consequence

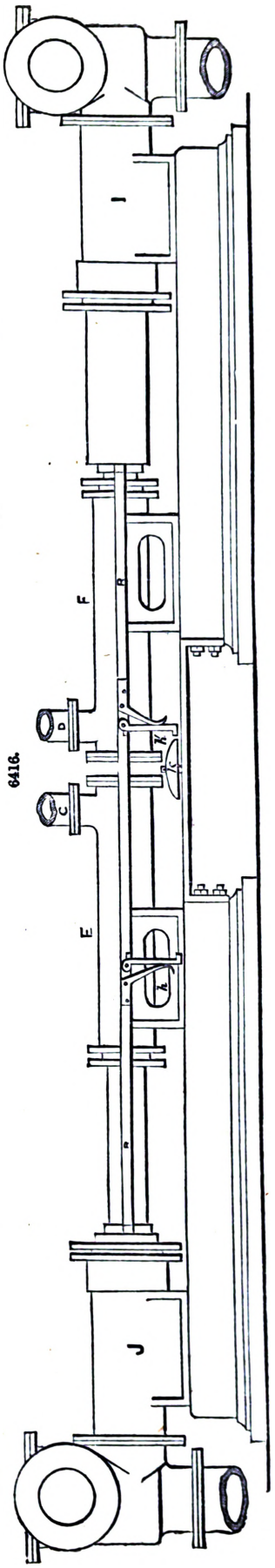

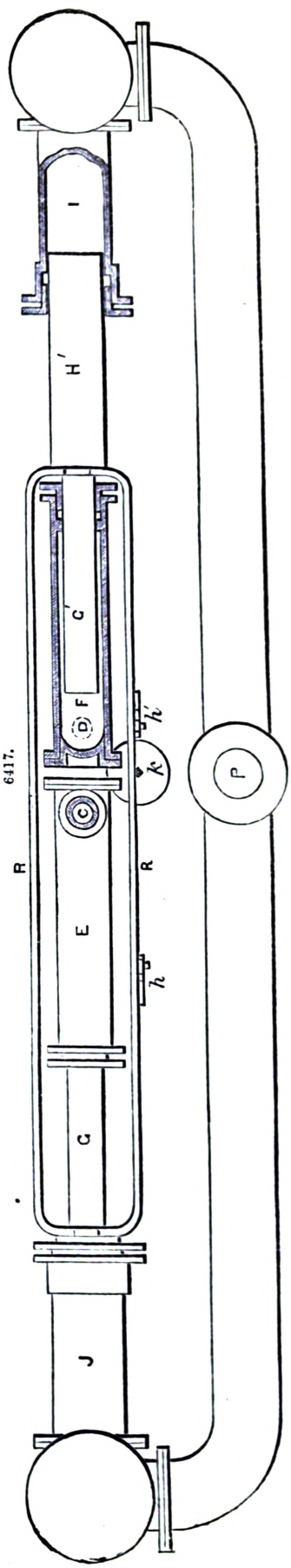

of a loss of water in that pipe. Cut off the communication between the motor-cylinder A, by closing the valve V', and open the discharge-cock on that cylinder. The pressure in the reservoir-

6418.

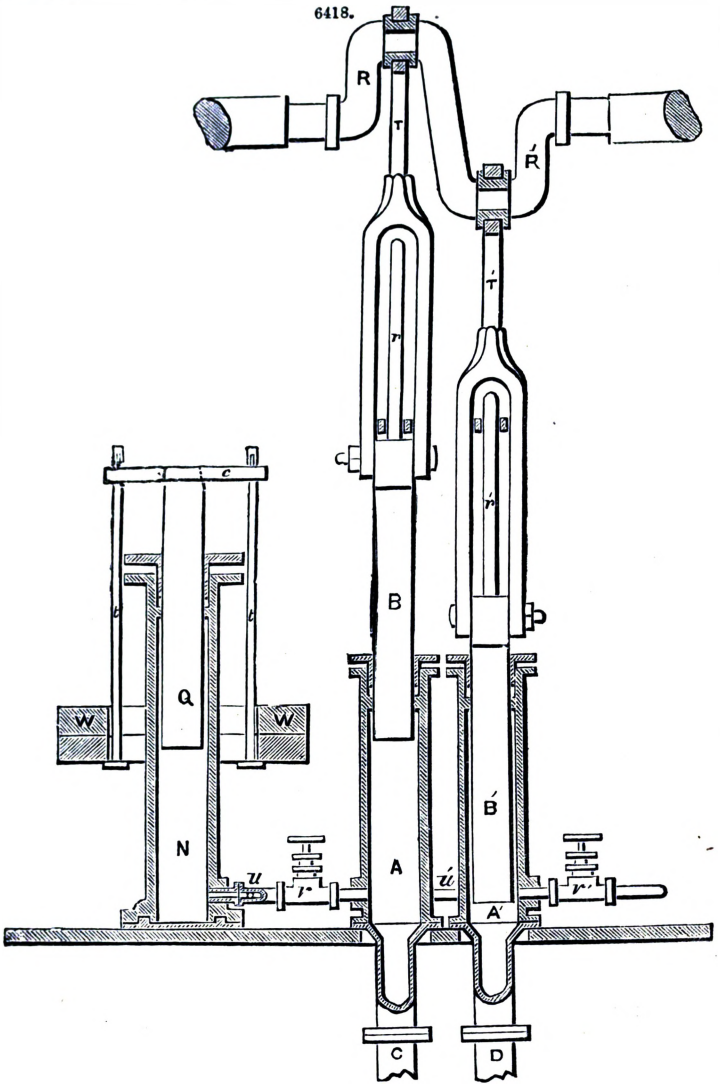

cylinder will then force the rams back to their normal position. Another mode of signalling or preventing displacement of the pump-plungers is to place a kind of spring buffer upon the connecting rods. Should a displacement occur, the buffer comes in contact with a standard or stout stud projecting from the bed-plate, and as further motion in that direction is stopped, the accumulator N takes the motive pressure; the consequent rise of the loaded piston indicating that the pumps are not making their full stroke.

Besides the purposes we have described, the reservoir-cylinder with its loaded piston serves the very important one of preventing a shock at each change of stroke. Also in the case of a hitch occurring in the pumps, the reservoir would take the pressure from the motor-cylinder, and so prevent a rupture. A small force-pump, worked by an eccentric from the same crank-shaft as the driving rams, supplies water to the reservoir.

6419.

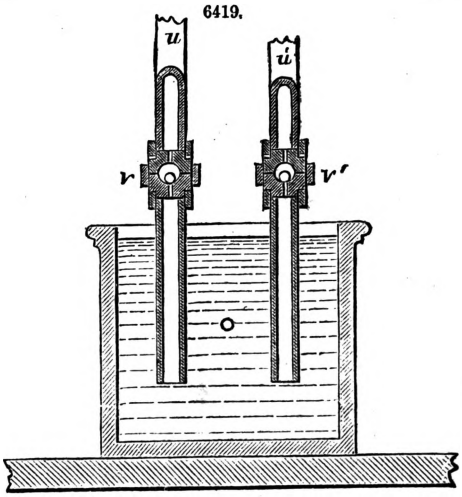

Another contrivance for keeping the pressure-pipes full of water is shown in Fig. 6419. The part of the motor-cylinder just beneath the stuffing box is connected by a pipe u and u' to a cistern O. These pipes are each fitted with a ball-valve v and v'. A leakage in either of the pressure-

pipes would create a partial vacuum in that part of its motor cylinder; but then the atmosphere pressing on the surface of the water in the cistern would at once open the valve and admit as much water from the cistern as required to restore the necessary equilibrium. Other appliances for signalling a defect and instantly remedying it have been provided; but we shall not describe them here.

By this system, the force developed by the motor may be transmitted to the pump without any other loss than that due to the friction of the water, which for a depth of a thousand feet will usually be less than 2 per cent. of the total force required to raise the water. It is applicable to water as well as to steam power, and the pumps being double-acting, no portion of the power of the water-wheel is lost. The pressure-pipes are fixed parallel to each other against the sides of the shaft, or upon the floor of a level, so that the space occupied by them is practically nothing. When used in the place of flat rods, that is, when carried horizontally from the engine-house or water-wheel to the shaft, they may be laid underground so as not to obstruct surface operations. One great advantage possessed by this system is the facility it affords for changing the direction. Provided sharp angles are avoided, the pressure-pipes may be carried along in all manner of directions, as occasion and locality may require, without any appreciable loss of power.

Pumps for Surface-draining.—The requirements of surface-draining, and the conditions under which a pump applied to that purpose has to work, are altogether different from those which we have been considering. In mines a comparatively small quantity of water has to be lifted to a great height, and the motor is, in most cases, necessarily situate a long distance from the pump. For surface work, such, for example, as draining a marsh, a large quantity of water is required to be lifted to a small height, and the motor may be placed close to the machinery to be driven. Generally the motor will be steam; for it is rarely possible to obtain water-power in a convenient situation. In Holland wind is frequently employed for this purpose, but the variable character of this motor renders it unsuitable for pumping operations. It may, however, often be used as an auxiliary with great advantage. The kind of pump best suited for surface drainage is, in general, the centrifugal pump. The nature of this pump renders it peculiarly well adapted for this kind of work. It is exceedingly simple in construction, is easily erected, and requires no massive foundations. The absence of valves is a great advantage, as small pieces of wood, weeds, and other small floating substances, may be passed without choking the pump. An experiment was made some time ago with one of Appold's 12-in. pumps by throwing in all at once about half a gallon of nut-galls when working at full speed. They all passed through without one being broken. Also when the height of lift is small, a very large quantity of water may be raised a minute by a centrifugal pump, a condition usually imposed by the nature of the work, and which this pump is therefore capable of fulfilling. We have described and illustrated some of the best models under Hydraulic Machines, and hence it will be unnecessary to do more than refer to them here. In many cases, Murray's chain-pump may be applied to the purpose of surface drainage with advantage, especially when the area to be drained is small. It will be for the engineer to determine which of these kinds is the more suitable to the requirements of the case under his consideration.

Pumps for Water-supply.—The requirements of this case are—a large quantity of water to be raised to a considerable height, and a steady, continuous supply, requirements which neither the centrifugal nor the chain pump is capable of satisfactorily fulfilling. Reciprocating pumps are exclusively used for this purpose. Whether, however, the lifting or the forcing variety is the more suitable seems still to be an open question, judging from the want of uniformity in the practice of engineers. We have shown that whenever a considerable height of lift and a continuous working are conditions to be fulfilled, the force-pump possesses great advantages over the lift; and it is satisfactory to see that the former variety is gradually coming into favour. No particular construction can be recommended for this case, as a great deal must depend on local circumstances. For a small supply an arrangement of Hayward Tyler and Co.'s Universal pump has been found to work very satisfactorily. It has been used at the Slough Water-works, and also, as an auxiliary, at the Tottenham Water-works.

Pumps for Raising particular Liquids.—We have spoken of the corrosive properties of mine water, and the necessity of lining the working barrel and other working parts with brass, to enable them to withstand the corrosive action. This precaution is, however, insufficient in many cases where liquids of a particular nature have to be raised. Thus in chemical works pumps are required to raise strong acids and various other substances which would speedily destroy the working parts if constructed of ordinary materials. In paper-mills they are needed to raise the paper-pulp and bleachers; in breweries, for raising the hot wort; in gasworks, for pumping ammoniacal liquor and tar; in tan-yards, for pumping tan liquor; and also in town drainage works, for raising the sewage. The only kind of pumps suitable for these operations are the reciprocating kind, and of these the forcing variety is the best adapted for sewage, and, generally, the lifting variety for the other purposes mentioned. The fittings of pumps to be applied to any of these purposes should be of gun-metal. Cast-iron clacks are frequently used for pumping ammonia water; but generally gun-metal should be adopted. In chemical works it is often necessary to employ india-rubber instead of metal for the valves. In Fig. 6420 we illustrate a pump specially designed for these purposes, having india-rubber valves and a glass cylinder. The design and construction of this pump, which is known as Perreaux's, are excellent. The working barrel A is made from the best plate glass bored out by machinery and polished. The bucket-valve B and the foot-valve C, shown in section in Figs. 6421, 6422, are of india-rubber, and the elasticity of the material is relied upon to close them. We are not aware of any experiments made to ascertain the amount of slip through these valves, but the principles we laid down in the former part of this article would lead us to expect very little. The mode of fixing these valves is so clearly shown in the figures that description is unnecessary; we cannot, however, refrain from expressing our admiration of the very excellent nature of this mode, which is alike creditable to the designer and the constructor. The glass barrels are mounted in cast-iron suction-pipe and rising-main, with wrought-iron stretcher-

rods and nuts, as shown in Fig. 6420. The valves may be mounted in brass, lead, or gun-metal, as required.

6420.

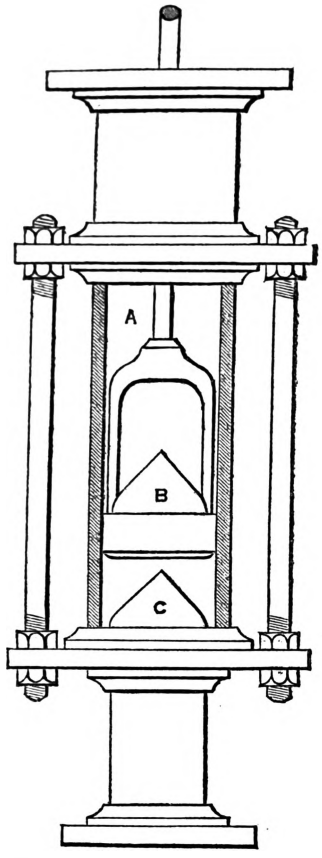

6421.

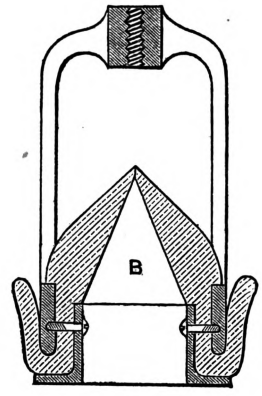

6422.

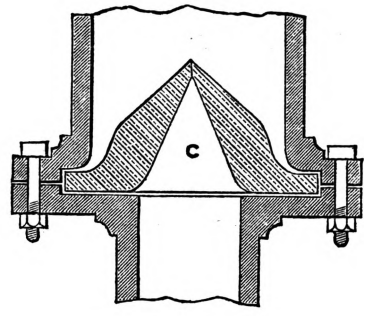

In raising hot liquids, such as the wort in breweries, suction cannot be employed by reason of the impossibility of creating a vacuum in consequence of the evolution of steam from the heated liquid. In such cases, therefore, the pump must be placed on a sufficiently low level to allow the liquid to enter by the force of its own gravity. When it is required to raise liquids of such a consistency as to be incapable of a rapid flow, as tar, for example, the motion of the pump should be slow, and the height of the suction should be reduced as much as possible. In such cases, the pipes and working barrel should never be of small diameter, and the valves should have a higher lift than is requisite for water. Also all contractions of the passages and changes of direction should be avoided, as they greatly impede the flow of thick liquids. These remarks apply, though in a less degree, to town sewage.

Pumps for Emptying Docks.—The requirements of this case are similar to those of surface drainage, and therefore the same pumps may be applied to this purpose. It should be remarked, however, that the nature of the chain-pump renders it peculiarly suitable to the work of emptying a dock.

Contractors' Pumps.—The chief purposes to which a contractor's pump is applied, are the removal of water from cuttings and other excavations, and the emptying of coffer-dams. The nature of the work, and the conditions under which it has to be executed, are such that a pump which is to be applied to these purposes must be simple in construction, capable of bearing rough usage, easily repaired when out of order, of such a nature that it may be readily erected in any locality, and as readily removed when circumstances require it, capable of raising a considerable quantity of water to a small height, and need but little attention. The whole of these requirements are fulfilled by the chain-pump, and accordingly we find this pump generally adopted. Of reciprocating pumps, Hayward Tyler and Co.'s Universal pump fulfils the above requirements, with the exception, perhaps, of that one which requires it to be capable of easy repair. This pump has been used on several engineering works recently, and appears to have given entire satisfaction. One advantage possessed by this pump is, that it may take its steam from a portable engine that is employed for other purposes, such, for instance, as sawing.

Bilge-pumps.—Bilge-pumps are the pumps used on board ships to remove the bilge-water, that is, the water which lies upon the bilge or bottom of the vessel. In their simplest form they consist of a pump having a staff or rod 7 or 8 ft. long, with a bar of wood to which the leather is nailed, and which serves instead of a box. This staff is worked by men who pull it up and down with a rope fastened to the middle of it. Bilge-pumps as now used in all but the smallest vessels, have all the improvements that of late years have been effected in this kind of machinery. Usually they are

force-pumps, and in steam-ships they are worked by the engine. In such cases they are capable of raising a large quantity of water at a stroke. As they differ in no essential particular from the pumps we have already described, it will not be necessary to describe them here. Among the best designed and constructed of this class of pumps are those manufactured by Watt and Co. Centrifugal pumps have been successfully applied to this purpose.

Pumps for Supplying Hydraulic Machinery.—The purpose of this class of pumps is to force water into a receiver against the pressure exerted by a heavy weight, or by the elasticity of the opposing substance. The former case is that of Armstrong's accumulator, into which the water is forced by the engine against the pressure—often equal to 1500 ft. of water—exerted by the loaded ram, the latter that of Brahma's press, into which the water is forced against the pressure due to the elasticity of the substance compressed. The only kind of pump applicable to this case is the reciprocating, and of these only the forcing variety. There is nothing particular to note in pumps applied to these purposes, beyond the necessity of adapting their details to the work they have to perform. The chief requirement is that their several parts shall possess sufficient strength to withstand the pressure to which they will be subjected.

Feed-pumps.—These belong to the same class of pumps as the preceding. They are required to force water into a boiler against the pressure of the steam, and hence are subject to the same conditions as those for supplying hydraulic machinery. A certain degree of modification in the case of feed-pumps is due to the fact that they usually work against a lower pressure than the latter; but essentially the conditions are identical. The same kind and variety of pumps will therefore be requisite in this case. Feed-pumps have been fully treated of under Details of Engines, and we must refer the reader to that article for complete information on this subject.

Air-pumps.—Air-pumps are employed either to exhaust the air contained in a given space, or to compress the air contained in that space. The latter are of the nature of the forcing pumps employed for liquids; the former resemble the lifting pump. We have described and illustrated both kinds under Air-pump, Diving, and Details of Engines; in the latter of these articles the air-pump, as applied to steam-engines, being fully discussed. Recently, however, the compressing air pump has been applied to the setting of large iron columns in deep water, by expelling the water and mud from the bottom by means of compressed air instead of pumping it out of the top. The engineer of the new graving dock at Hog Island, Bombay Harbour, conceived the idea of setting the large columns, 6 ft. in diameter and 70 ft. in length, required for this work, in this way. To do this, however, an air-pump of great power and large volume was requisite. Such a pump was designed and supplied by Barnett and Foster, of London, and its use was attended with remarkable success. Fig. 6423 is a side elevation, and Fig. 6424 a section through one of the

6423.

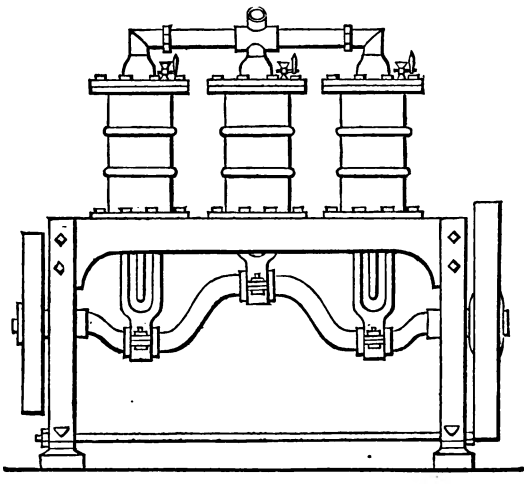

6424.

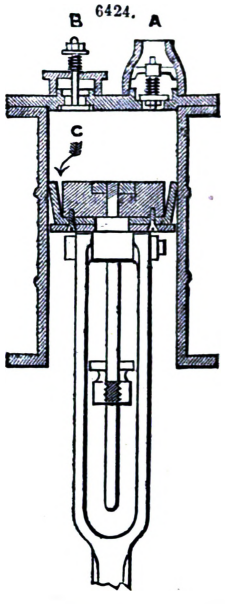

cylinders of this large treble pump. These cylinders are 9 in. in diameter and 18 in. in length, the throw of the crank being 9 in., and the diameter of the latter 5 in. The leathering of the piston is on the principle adopted in hydraulic pumps, that is, it is so arranged that the pressure from within helps to tighten it. This arrangement is shown at C, Fig. 6424. The diameter of the inlet-valve B is 1½ in., and that of the outlet-valve A 2 in. There is a copper cooling cistern around the outside of the pumps. This cistern is a cylinder of larger diameter than the pump-cylinder, the annular space between the two being filled with water to prevent the latter from becoming heated, and so to preserve the air within the pump from being rarefied. The three pump-cylinders are connected at the top, as shown in Fig. 6423, and hence the stream of air is continuous. On the top of each cylinder there is a lubricating cup.

The mode of applying this pump to the setting of the columns was as follows;—The several pieces were bolted together above water in a massive framework, and lowered to receive a fresh one till the first touched the bottom. The hood was then fitted into the top, and the interior of the

column put into communication with the air-pump. The water contained in the column was thus forced down and out at the bottom, the time required to clear out the whole of the contents being less than half an hour. Such was the force of the pressure developed, that the whole column would frequently lift fully 18 in., letting the mud out at the bottom. When cleared, the columns were entered, and filled up to a height of 5 or 6 ft. with hard cement, thus converting them into a solid mass at bottom. When it is added that the power requisite to work the air-pump was only 6-horse, the superiority of this mode of emptying columns over that usually adopted of pumping the water out of the top will be readily acknowledged.

PUPPET. Fr., *Poupée;* Ger., *Docke;* Ital., *Toppo;* Span., *Soporte de mandril.*

The upright support of a mandrel in a lathe is termed the puppet or poppet. See Hand-Tools. Machine Tools.

PYROMETER. Fr., *Pyromètre;* Ger., *Pyrometer;* Ital., *Pirometro;* Span., *Pirómetro.*

A pyrometer is any instrument used for measuring degrees of heat above those indicated by the mercurial thermometer, and constructed usually on the principle of registering or measuring, by means of multiplying levers and a scale, the change in length of some expansible substance, as a metallic rod, when exposed to the heat, to be measured.

QUARRYING. Fr., *Exploitation des carrières, Détacher le roc, les pierres;* Ger., *Gestein abtreiben;* Ital., *Cavare;* Span., *Canteria.*

An excavation made for the purpose of obtaining stone is called a quarry. When the object sought is a metal or coal, the excavation is called a mine. A quarry is usually worked open to surface, and is never carried to a great depth; a mine, on the contrary, is rarely worked to surface, and the depth to which it is sunk is in all cases considerable. Quarrying differs little from mining in principle beyond what follows, through the latter being essentially an underground operation.

Quarries are of two kinds, determined by the use to which the excavated material is to be applied; and the mode of carrying out the work of excavation differs in detail in each of these kinds. When the stone is required for building purposes, it is requisite to extract it in that form from which the designs of the builder can be most readily obtained, and at the same time to avoid waste by breaking the stone in an undesirable manner. This necessitates a certain mode of operating, and some care and skill in conducting the operations. But when the shape and size of the pieces of stone extracted are immaterial, as, for instance, in the cases of chalk for lime, stone for road construction and maintenance, or in cuttings through rock for a line of railway. The expeditious removal of the stone is the main object to be kept in view.

In quarrying for any of the above purposes, as, indeed, in all operations, a great object is to produce the greatest results with the available means. And to effect this object, it is necessary to study closely the formation of the rocks in which the excavation is to be made, so as to be able to take advantage of the natural divisions, and by that means to greatly lessen the labour of the quarryman. It must be borne in mind that all rocks belong to one or other of two great classes, namely, the stratified and the unstratified. The former are sedimentary rocks, occurring in parallel beds or strata, and include a large class of most valuable building materials, such as the magnesian lime, sand, and free stone, millstone grit, Yorkshire landings, and other well-known stone. Unstratified or igneous rocks, which include greenstone or whinstone, granite, and porphyry, have no distinct bedding, that is, they do not lie in separate layers. Roofing slate is a stratified rock, but it splits into thinner laminæ in the direction of its cleavage than in that of its bedding, the former being often at right angles to the latter. Some igneous rocks, as granite, have also a natural cleavage, though not stratified. Advantage must be taken of all these peculiarities in order to carry out quarrying operations in an efficient and economical manner.

When the excavation is in stratified rock and the stone is required for building purposes, hand labour is generally preferred to blasting, especially when large blocks for columns, obelisks, tombstones, and similar objects are required. Such blocks are obtained from the more valuable parts of sandstone deposits, technically known as liver-rock; these are the thicker and more consolidated strata. Pieces of limited thickness, as flagstones, are obtained from the thinner beds termed bed-rocks. In quarrying by these means from stratified rocks, a sufficient surface of the rock is first laid bare parallel to the bed of deposit. This portion has then to be disconnected from the general mass by cutting through the stratum or layer, so that it may be removed by sliding upon its bed. To effect the operation, the quarryman, having previously marked out on the exposed surface the size and shape of the stone required, makes a number of small holes with a pick along the line drawn. The distance of these holes apart will depend upon the facility with which the rock can be cleaved. Wrought-iron steel-tipped wedges are then inserted in the holes and struck in succession with heavy hammers until the openings made by them extend from one to the other and also down through the stratum. The block is then free to slide upon its bed, and is removed from its original position by means of iron bars and levers. When the stratum is too thick to be divided in this way, and the stone is of a nature to yield readily to the cutting tool, which is usually a pointed hammer called a pick-hammer, the holes above referred to are sunk deeper, in the form of the letter V, and the wedges inserted in the bottom. Another mode, when the rocks are easily cleaved, is to insert another row of wedges parallel to the natural cleavage. By striking these simultaneously with the others a block is procured of less thickness than the stratum.

When the blocks have been removed from their natural position, they have still to be quarried into shape according to the purpose for which each piece is best suited. Thus, in a building-stone quarry, after the stones of unusual size and quality have been selected for the purposes mentioned above, the larger pieces are roughly formed into ashlar, window-sills, lintels, rybats, corners, steps, and the like, by means of picks, hammers of various kinds, and wedges. The small irregular-shaped pieces are called rubble, and are used for the commonest kind of building. Slates are split up into the requisite thickness by means of a broad chisel and mallet.

The methods we have described apply chiefly to quarries opened for the sole purpose of procuring building stone. But it behoves the engineer who has to execute an excavation in stratified rocks to

consider whether the material removed may not be advantageously employed in the construction of his works, and if such be the case, whether he may not profitably adopt these methods in preference to others which, though more expeditious, spoil a large proportion of the stone.

When the rock is unstratified, or when the stratum is too thick to be disrupted by the wedge without great labour, recourse is had to the action of explosive agents. The explosives most frequently used for this purpose are gun-cotton, dynamite, and gunpowder. Dynamite is now often employed, and always with considerable success. The dangerous character of gun-cotton has hitherto prevented its adoption for ordinary operations, while the comparatively safe character and convenient form of gunpowder have commended it to the confidence of workmen, and hence, for quarrying operations, this explosive is generally employed. We shall therefore, in treating of blasting for stone, consider these operations as carried out by the aid of gunpowder alone.

The system of blasting employed in quarrying is that known as the small-shot system, which consists in boring holes from 1 to 3 in. diameter in the rock to be disrupted to receive the charge. The position of these holes is a matter of the highest importance, from the point of view of producing the greatest effects with the available means, and to determine them properly requires a complete knowledge of the nature of the forces developed by an explosive agent. This knowledge is rarely possessed by quarrymen. Indeed, such is the ignorance of this subject displayed by quarrymen generally, that when the proportioning and placing the charges are left to their judgment, a large expenditure of labour and material will produce very inadequate results. In all cases it is far more economical to entrust these duties to one who thoroughly understands the subject. The following principles should govern all operations of this nature;—

The explosion of gunpowder, by the expansion of the gases suddenly evolved, develops an enormous force, and this force, due to the pressure of a fluid, is exerted equally in all directions. Consequently, the surrounding mass subjected to this force will yield, if it yield at all, in its weakest part, that is, in the part which offers least resistance. The line along which the mass yields, or line of rupture, is called the line of least resistance, and is the distance traversed by the gases before reaching the surface. When the surrounding mass is uniformly resisting, the line of least resistance will be a straight line, and will be the shortest distance from the centre of the charge to the surface. Such, however, is rarely the case, and the line of rupture will therefore in most instances be an irregular line, and often much longer than that from the centre direct to the surface. Hence in all blasting operations there will be two things to determine, the line of least resistance and the quantity of powder requisite to overcome the resistance along that line. For it is obvious that all excess of powder is waste; and, moreover, as the force developed by this excess must be expended upon something, it will probably be employed in doing mischief by shattering stones which it would be desirable to preserve whole. Charges of powder of uniform strength produce effects varying with their weight, that is, a double charge will move a double mass. And as homogeneous masses vary as the cube of any similar line within them, the general rule is established that charges of powder to produce similar results are to each other as the cubes of the lines of least resistance. Hence when the charge requisite to produce a given effect in a particular substance has been determined by experiment, that necessary to produce a like effect in a given mass of the same substance may be readily determined. As the substances to be acted upon are various and differ in tenacity in different localities, and as, moreover, the quality of powder varies greatly, it will be necessary, in undertaking quarrying operations, to make experiments in order to determine the constant which should be employed in calculating the charges of powder. In practice, the line of least resistance is taken as the shortest distance from the centre of the charge to the surface of the rock, unless the existence of natural divisions shows it to lie in some other direction; and, generally, the charge requisite to overcome the resistance will vary from $\frac{1}{15}$ to $\frac{1}{35}$ of the cube of the line, the latter being taken in feet and the former in pounds. Thus, suppose the material to be blasted is chalk and the line of least resistance 4 ft. The cube of 4 is 64, and taking the proportion for chalk as $\frac{1}{30}$, we have $\frac{64}{30} = 2\frac{2}{15}$ lbs. as the charge necessary to produce disruption.

In commencing quarrying operations, the first thing is to find an exposed surface behind which the charge may be placed so as to force it outwards. A vertical surface presents fewer difficulties than any other, both because the resistance in such a case is usually less, and because the proper placing of the charge may be more readily effected. When the blasting is in stratified rock, the position of the charge will frequently be determined by the natural divisions and fissures; for if these are not duly taken into consideration, the quarryman will have the mortification of finding, after his shot has been fired, that the elastic gases have found an easier vent through one of these flaws, and that consequently no useful effect has been produced. The line of least resistance, in this case, will generally be perpendicular to the beds of the strata, so that the hole for the charge may be driven parallel to the strata and in such a position as not to touch the planes which separate them. This hole should never be driven in the direction of the line of least resistance, and when practicable should be at right angles to it.

The instruments employed in boring the holes for the shot are iron rods having a wedge-shaped piece of steel welded to their lower ends and brought to an edge so as to cut into the rock. These are worked either by striking them on the head with a hammer, or by jumping them up and down and allowing them to penetrate by their own weight. When used in the former manner they are called borers or drills; in the latter case they are termed jumpers. Recently power jumpers worked by compressed air, and drills actuated in the same manner, have been very successfully employed. Holes may be made by these instruments in almost any direction; but when hand labour only is available, the vertical can be most advantageously worked.

The speed with which holes may be sunk varies of course with the hardness of the rock and the diameter of the hole. At Holyhead the average work done by three men in hard quartz rock with 1½-in. drills was 14 in. an hour; one man holding the drill, and two striking. In granite of good quality, it has been ascertained by experience that three men are able to sink with a 3-in.

jumper 4 ft. in a day; with a 2½-in. jumper, 5 ft.; with a 2¼-in., 6 ft.; with a 2-in., 8 ft.; and with a 1¾-in., 12 ft. A strong man with a 1-in. jumper will bore 8 ft. in a day. The weight of the hammers used with drills is a matter deserving attention; for if too heavy they fatigue the men, and consequently fewer blows are given and the effect produced lessened; while, on the other hand, if too light, the strength of the workman is not fully employed. The usual weight is from 5 to 7 lbs.

As the labour of boring a shot-hole in a given kind of rock is dependent on the diameter, it is obviously desirable to make the hole as small as possible, due regard being had to the size of the charge; for it must be borne in mind in determining the diameter of the boring that the charge should not occupy a great length in it. Various expedients have been resorted to for the purpose of enlarging the hole at the bottom so as to form a chamber for the powder. If this could be easily effected, such a mode of placing the charge would be highly advantageous, as a very small bore-hole would be sufficient, and the difficulties of tamping much lessened. One of these expedients is to place a small charge at the bottom of the bore and to fire it after being properly tamped. The charge being insufficient to cause fracture, the parts in immediate contact with it are compressed and crushed to dust, and the cavity is thereby enlarged. The proper charge may then be inserted in the chamber thus formed by boring through the tamping. Another method, applicable chiefly to calcareous rock, has been tried with satisfactory results at Marseilles. When the bore-hole has been sunk to the required depth, a copper pipe, Fig. 6425, of a diameter to fit the bore loosely, is introduced, the end A reaching to the bottom of the hole, which is closed up tight at B with clay so that no air may escape. The pipe is provided with a bent neck C. A small leaden pipe about ½ in. in diameter, with a funnel *f* at the top, is introduced into the copper pipe at D and passed down to within about an inch of the bottom. The annular space between the leaden and copper pipes at *g* is filled with a packing of hemp. Dilute nitric acid is then poured through the funnel and leaden pipe. The acid dissolves the calcareous rock at the bottom, causing an effervescence, and a substance containing the dissolved lime is forced out of the orifice C. This process is continued until from the quantity of acid consumed it is judged that the chamber is sufficiently enlarged. Other acids, such as muriatic or sulphuric, will produce the same effects, but the result of the chemical solution will of course depend upon the nature of the stone.

6425.

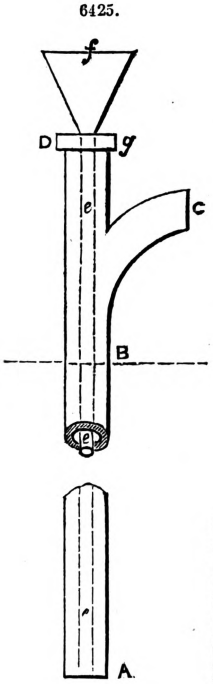

6426.

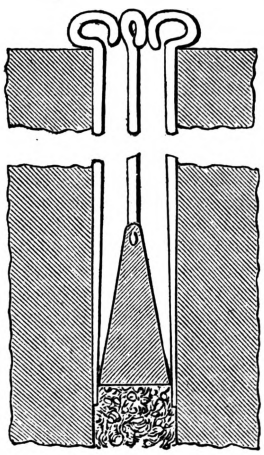

6427.

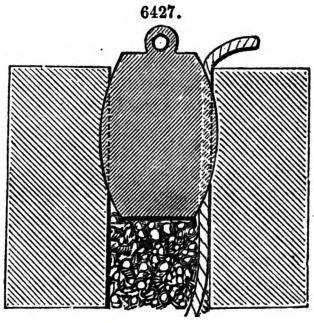

After the shot-hole has been bored, it is cleaned out and dried with a wisp of hay, and the powder poured down; or, when the hole is not vertical, pushed in with a wooden rammer. The quantity of powder should always be determined by weight. One pound, when loosely poured out, will occupy about 30 cub. in., and 1 cub. ft. weighs 57 lbs. A hole 1 in. in diameter will therefore contain ·414 oz. for every inch of depth. Hence to find the weight of powder to an inch of depth in any given hole, we have only to multiply ·414 oz. by the square of the diameter of the hole in inches, and we are enabled to determine either the length of hole for a given charge, or the charge in a given space. It is important to use strong powder in blasting operations, because, as a smaller quantity will be sufficient, it will occupy less space, and thereby save labour in boring.

When the line of least resistance has been decided upon, care must be taken that it remains the line of least resistance; for if the space in the bore-hole is not properly filled, the elastic gases may find an easier vent in that direction than in any other. The materials employed to fill this space are, when so applied, called tamping, and they consist of the chips and dust of the quarry, sand, well-dried clay, or broken brick or stones. Various opinions are held concerning the relative value of these materials as tamping. Sand offers very great resistance from the friction of the particles amongst themselves and against the sides of the bore-hole; it may be easily applied by pouring it in, and is always readily obtainable. Clay, if thoroughly baked, offers a somewhat greater resistance than sand, and, where readily procurable, may be advantageously employed. Broken stone is much inferior to either of these substances in resisting power. The favour in which it is held by quarrymen, and the frequent use they make of it as tamping, must be attributed to the fact of its being always ready to hand, rather than to any excellent results obtained from its use.

To lessen the danger of the tamping being blown out, plugs or cones of metal of different shapes are sometimes inserted in the hole. The best forms of plug are shown in Figs. 6426, 6427; Fig. 6426 is a metal cone wedged in on the tamping with arrows, and Fig. 6427 is a barrel-shaped plug. These mechanical contrivances are employed only in particular circumstances, such as blasting in a shaft; but their efficacy may well be doubted.

In determining the most economic method of obtaining a given quantity of stone from a quarry of any particular description of rock, it is necessary to ascertain, first, the speed with which the bore-holes may be sunk; second, the effects of certain agents, such as small charges or acids, in enlarging the chamber at the bottom; third, the constant from which the charge is to be calculated; and, fourth, the height of face that can be obtained in the quarry. The latter is a very important question economically, for it is obvious, since the charge is placed behind the face, that the higher that face is, the larger will be the mass of rock dislodged. When the face is low, the charge has the same mass to act upon as when the face is high; but in the latter case, a much larger mass is dislodged by its own weight. After these data have been determined, the size of the block required must be considered, and a large charge, or a succession of small charges, applied accordingly. In some quarries large charges are always preferred on account of the less frequent necessity of clearing the quarry of the workmen. To fire the charge a Bickford's fuze is generally employed; this fuze is inexpensive, very certain in its effects, not easily injured by tamping, and is unaffected by damp.

In excavating rock for a railway cutting, a gullet or small cutting is first carried throughout the work, and it is of the highest importance that this gullet should be carried down to the full depth of the cutting. The gullet is then widened by blasting down the faces. The economy of these operations depends in a very high degree upon the skill with which the charges are applied. There is a case on record in which a railway cutting through hard rock was carried down by blasting to a depth of 2 or 3 ft. less than was required of the contractor. To remove these 2 or 3 ft. by hand labour, cost about a guinea a cubic yard, whereas the rest of the cutting averaged only 3*s.* 6*d.* Had the gullet been taken out to the required depth in the first instance, and the charges placed lower, the same quantity of powder would have been sufficient to complete the work.

In quarrying, as in mining, much of the cost is incurred for the removal of water from the workings. A set of pumps and a steam-engine, or a water-wheel where water-power is available, are indispensable for every quarry of any extent. The clearing away of sand, gravel, and other loose débris from the upper bed of the rock also entails considerable expense. This débris, which geologists call drift, and quarrymen tirring, often becomes suddenly very deep, especially when the beds dip at a high angle, and it constitutes an obstacle by which many quarries of stratified rock are soon arrested.

See Boring and Blasting. Tunnelling.

RACK. Fr., *Crémaillère;* Ger., *Zahustange;* Ital., *Dentiera;* Span., *Cremallera.*

A rack is a straight bar with teeth on its edge arranged so as to gear with those of a wheel or pinion which is to drive or follow it. See Mechanical Movements.

RAIL. Fr., *Rail;* Ger., *Schiene;* Ital., *Rotaia;* Span., *Barra-carril.*

See Materials of Construction, *Strength of.* Permanent Way. Railway Engineering.

RAILWAY ENGINEERING. Fr., *Construction des chemins de fer;* Ger., *Eisen-bahn Bauten;* Ital., *Costruzione delle strade ferrate;* Span., *Direccion facultativa de ferro-carriles.*

The subject of railway engineering includes all the duties which devolve upon an engineer in the laying out and constructing a line of railway, from the preliminary surveys and levels necessary to the selection of the most eligible route, to the final laying of the permanent way. Some of the more important works of construction inseparable from a line of locomotive traffic, are described under their respective heads, as well as many minor details also connected with the present subject. In England and in Continental countries, certain formalities in relation to the Legislature and the preliminary surveys, must be complied with, previous to obtaining permission from the Government to construct the proposed railway. This is known in England as Parliamentary work, and is nothing more than the observation of certain regulations with regard to the preliminary surveys, laid down by the Government. In every instance it is indispensable to conduct these surveys, and therefore we shall describe the best method of carrying them out in a general point of view, leaving the legal part of the subject out of consideration. All information on this point, so far as Great Britain is concerned, can be obtained from the Standing Orders of the Lords and Commons.

Preliminary Survey or Reconnaissance.—The first step necessary towards the construction of any description of route of communication between two places, whether railway, road, or canal, consists in a preliminary survey or reconnaissance, to use an expressive term frequently employed by military engineers. This reconnaissance requires that the proposed route be either ridden or walked over, and a careful examination made of the principal physical contours and natural features of the district. The amount of care demanded and the difficulties attending the operation will altogether depend upon the character of the country and the condition of civilization to which it has attained. The absence of any map, no matter how incomplete and erroneous it might be, is a serious inconvenience. Engineers who have made only preliminary Parliamentary surveys at home, with the Ordnance maps in their hands, know little of the trouble, delay, and disadvantages attending the absence of all such guides. In the former case they have the bearings marked down for them with all the accuracy requisite for their purpose, in the latter they must obtain them by observations along the journey. It is for this reason that the spirit-levels used by engineers in England are rarely or ever provided with compasses, as the existence of excellent maps renders them unnecessary, whereas they are always attached to the instruments intended for foreign service, when it may be necessary to determine one's whereabouts at any moment.

The immediate object of the preliminary survey is to select one or more trial lines, from which the final route may be ultimately determined. When there are no maps, or when those which can be procured are not sufficiently in detail, points to the right and left of the imaginary line of road must be ascertained by bearings and connected by triangulation with the theodolite. The details may be filled in with the plane table and compass, so as to afford an accurate survey of the portion of the country, more or less wide, through some part of which the proposed route must pass. Many engineers prefer the prismatic compass or the box sextant for filling in details. Sometimes a separate survey must be made of each trial line by a traverse, and villages and other important

points laid down by taking cross-bearings with the compass. When the several trial lines are all plotted to the same scale, a good map can be prepared from which the exact line of road can be selected. In making a reconnaissance there are several points which, if carefully attended to, will very considerably lessen the labour and time otherwise required. Lines which would run along the immediate bank of a large stream, must of necessity intersect all the tributaries confluent on that bank, thereby demanding a corresponding number of bridges. Those again which are situated along the slopes of hills are more liable, in rainy weather, to suffer from washing away of the earthwork and sliding of the embankments, than others which are placed in valleys or elevated plateaux. When a line of railway crosses the ridges dividing the principal water-courses, the ascents and descents are greater, and the cost of working the finished line will be proportionably increased.

The position of summit levels, important features to be determined in selecting a line of railway, road, or canal, may be ascertained by observing the direction and size of the existing water-courses. The diagram in Fig. 6428 shows that the water falls from C to D, and also transversely from A A A and B B in the direction of D. In Fig. 6429 the ridge is broken along the line A A, from which the water flows in both directions towards C and D. In order to join the points A and D in

6428.

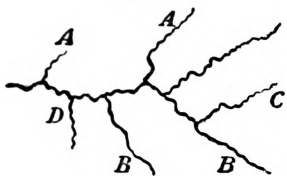

6429.

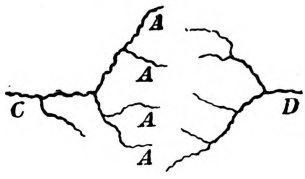

6430.

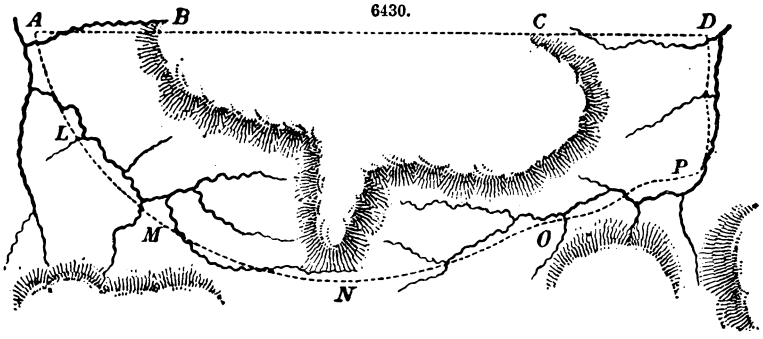

6431.

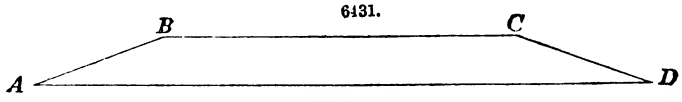

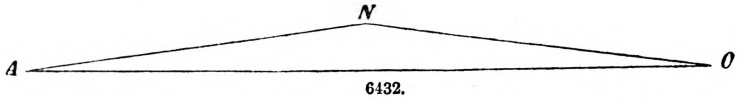

6432.

6433.

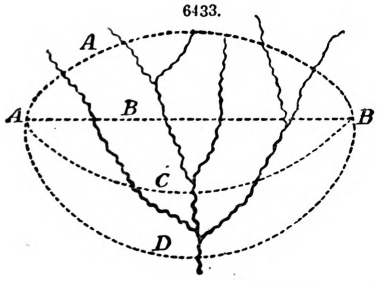

6434.

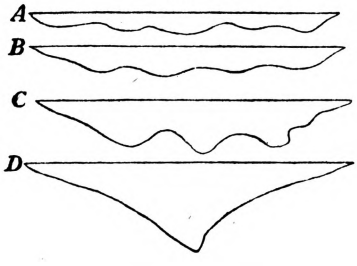

Fig. 6430 the line may run at once through B and C, or it may pass by way of the streams L M and O P. By the latter route the line would rise along the whole distance from A through L and M to the summit at N, and fall from N through O and P to D If the district between B and C consists of an elevated plateau, the longitudinal sections of the two lines will be represented in Figs. 6431, 6432, by A B C D and A N D. If the line passes from A to B in Fig. 6433 by the several routes A, B, C, D, the corresponding sections will be as shown in Fig. 6434. The conclusion to be drawn from these diagrams is that the difference of elevation to be overcome will be a minimum when the line crosses at the head of the streams.

Trial Lines by Compass.—When the line of railway has been approximately found by the recon-

naissance, a trial line may be run by compass through those parts of the district which present the most favourable features. It may be roughly staked out, and the leading topographical details right and left of it sketched in. If the trial line should follow the bed of a stream, it will have a contour A M C, as shown in Fig. 6435. The lowest line of the valley, although moderately inclined at first, rises more and more rapidly in the direction of the source of the stream as represented by the closer approach of the contour lines on the plan in Fig. 6436. If it be required that the line should rise uniformly from A to the summit level, the horizontal distances between the contour lines must be all equal throughout the whole ascent. This equality may be ensured by causing the line to cut the contours at right angles during the first part of the ascent, and obliquely as the summit level is approached. By these means the contour lines become nearer to one another, and we obtain the section A M M A on the plan in Fig. 6436. The contour line is level. The line cutting the contour line at right angles is the steepest line the ground allows of, and the inclination can be varied at pleasure between those limits. A very good idea of the result, so far as the section is concerned, of cutting the contour lines in different distances is shown in Figs. 6437, 6438. If the points A and B be connected upon the plan in Fig. 6437 by the straight line A B, we obtain the section

6435.

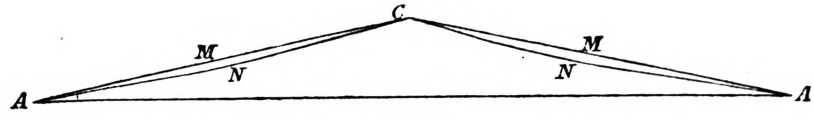

6436.

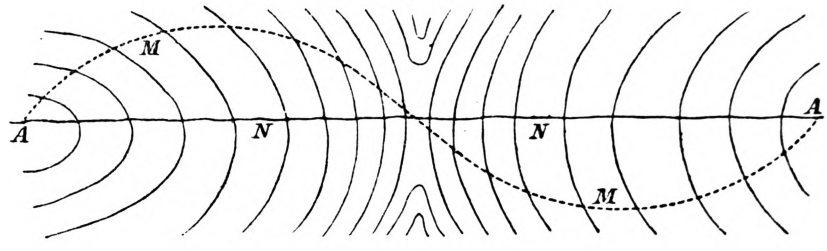

6437.

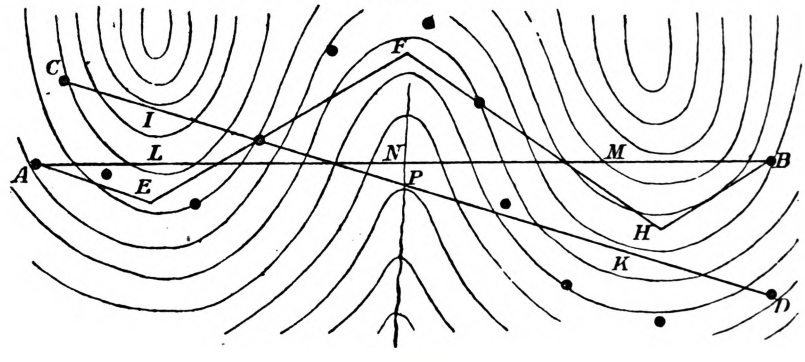

6438.

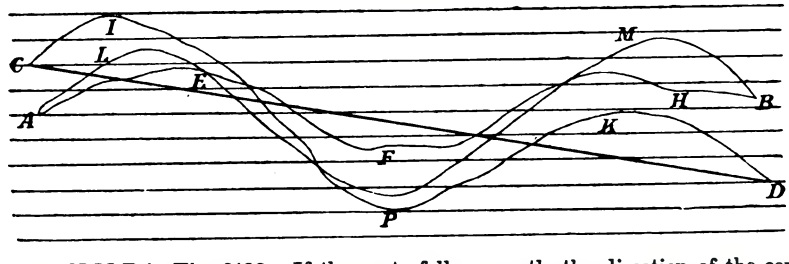

shown by A L N M B in Fig. 6438. If the route follow exactly the direction of the contour line from A to B, all the points are on the same level; and the section will be represented by the horizontal line A B in Fig. 6438. If the route run midway between the straight line A B and the contour line A E F H B, the corresponding section will be given in Fig. 6438 by A E F H B. If the points C and D, which are at different elevations, be connected by the straight line C D in Fig. 6437, the section will be represented by C I P K D in Fig. 6438. To descend at a uniform rate of inclination from C to D, the rate must be known, and the vertical distance between the contour lines. The corresponding horizontal distances between the contour lines are then known, which, applied as by the dots in Fig. 6436, give the required descent. The corresponding section is shown in Fig. 6438 by the straight line C D. The line A E F H B on the plan is longer than the

straight line A B, and the contour line is longer still. This increased length is not represented in the section in Fig. 6438, as the object is merely to show the general relation between the plan and section, and the use of correctly-drawn contour lines in adjusting any route to the ground.

Trial Lines by the Aid of a Map.—When the map of a district is procurable, the task of laying down one or two trial lines from which to select the final route, becomes more or less difficult in proportion to the scale of detail to which the map is drawn. Supposing that a really good map is obtainable, something approaching English Ordnance maps, the operation is as follows;—Map in hand, the engineer walks over the ground, marking on the plan certain points through which the trial lines are to pass. The points are connected together by straight lines and curves of given radii, and the line or lines are then ready to be levelled over, in order to ascertain which of them presents the best section or profile, as it is sometimes called. In instances in which the proposed route will probably run for a portion of its length along one or other of the banks of a stream, trial lines must be made on both banks, not only in order to determine the best longitudinal section, but also to discover the number of tributaries or feeders which belong to each side, since every one of these necessitates a bridge, or at least a diversion of the stream.

Trial or Flying Levels.—When once the trial lines have been marked on the map, the levelling is done by an ordinary instrument in the same manner as for the final route, which will be described in its proper place. But in countries of which there is no map, and in which the natural features are extremely rugged, the levels along a proposed route cannot be taken by the spirit-level. A less precise, but more portable, and more easily manipulated instrument must be employed. It must be borne in mind that in new countries in which there are no buildings, no private demesnes, and no vested interests to interfere with, the selection of a line of railway depends altogether upon the longitudinal section. For this reason the exact route is of little consequence, and the preliminary survey is limited, in the first case, to determining the relative altitudes of certain points through which, or in the vicinity of which, the line must pass. If we suppose for a moment that the altitudes of ten obligatory points have been ascertained, it is a simple question of winding the line between them, or, in other words, lengthening it until the maximum gradient which can be worked, is obtained. Flying levels are taken with great convenience and sufficient accuracy for the purpose by means of an excellent little instrument called the aneroid barometer. This instrument consists of a flat cylindrical metallic box, exhausted of air, the top of which is made very thin, and corrugated in concentric circles, in order to render it more elastic. When the atmospheric pressure increases, this corrugated top is forced inwards or downwards. When, on the other hand, the atmospheric pressure decreases, the elasticity of the metal, aided by a spring or a counterweight, tends to move it in the opposite direction. This movement of the top of the box is conveyed by a series of multiplying levers to an index moving over a circular scale, graduated to correspond with the structural barometer. The several parts of this instrument are shown in Fig. 6439. A A is the metallic box, with corrugated top, exhausted of air, and fixed to the bottom

6439.

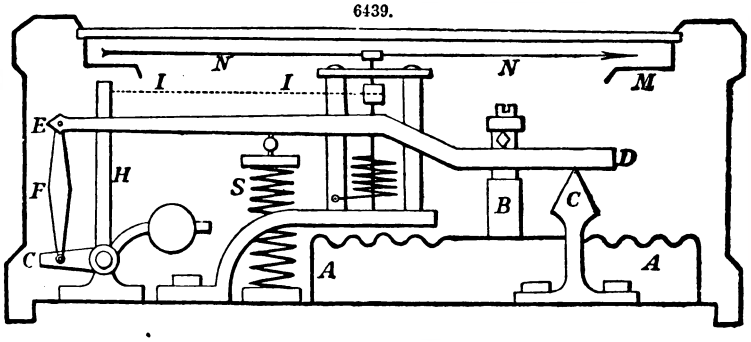

of a brass case enclosing the mechanism of the whole instrument. B is a small column connecting the top of the box with the principal lever E D, the latter moving upon the fulcrum C. The movement of the small end of the lever is carried by the rod F to the short end of the bent lever G H, to the upper end of which is attached the watch-chain I I. This chain passes round a small drum upon the arbor carrying the needle N N at its upper end.

A small hair-spring upon the arbor regulates the motion of the needle. S is a spiral spring, which, by its tension, raises the principal lever E D, when the pressure on the top of the box is in any way lessened. The circular scale, seen in section at M, is graduated by comparing its indications under different pressures with those of a standard mercurial barometer.

With a good aneroid a difference of 10 ft. in elevation may be detected. The mercurial column in the cistern barometer falls, in round numbers, 1 in. for each 1000 ft. of ascent. The amount of motion of the aneroid needle corresponding to 1 in. of the mercurial column depends upon the size and proportions of the instrument. With the outer case 5 in. in diameter, the needle is 3 in. long, and the diameter of the graduated circle the same. 1 in. on the mercurial column is represented upon such a circle by an inch and a half. This inch and a half is called an inch, and is divided into ten parts; and each of these again is subdivided into five parts; and as these smaller divisions are easily halved by the eye, the $\frac{1}{100}$ of an inch, which corresponds to a difference in elevation of only 10 ft., is readily determined.

To use the aneroid, the following rule has been prepared;—As the sum of the readings at the different stations is to their difference, so is 55,000 to the elevation required. Thus, if the reading at the foot of a hill is 30·05, and at the top 29·44, the sum is 59·49, and the difference 0·61; whence the proportion 59·49 to 0·61, as 55,000 to 564 ft. At the back of the aneroid is placed a

small screw, by means of which the needle may be set in either direction, so as to correspond with a standard barometer. In measuring an elevation, or in running lines of levels, the aneroid should be compared with a standard barometer or with another aneroid at the commencement and at the termination of the work, and at frequent intervals between, in order to detect any irregularity in the instrument. The aneroid is chiefly useful in working from one known elevation to another, to determine the approximate heights of intermediate points. For long-continued observations, unchecked, or for long profiles, the barometer is of little or no use.

The instrument should be carefully handled, and when used held in a horizontal position, in order that the counterweight may act properly. For nice work, an allowance should be made for variations in the temperature, both of the air and of the instrument.

This has not been commonly done in using the aneroid, though the results would certainly be more reliable if this point was regarded.

Flying levels may be taken by the plane-table by adjusting it carefully to the horizontal position, measuring the tangent of the angle of altitude or depression and multiplying it by the distance.

When the barometer is employed for taking preliminary or flying levels, the following formulæ may be used for calculating the difference of level at the different points where the observations are made. Let H and H_1 represent the height of the mercurial column in the barometer at the lower and higher stations respectively. Put T and T_1 for the corresponding temperatures at the two stations of the mercury in degrees of Fahrenheit, as shown by the attached thermometer, and T_2 and T_3 for the temperatures of the air in degrees of Fahrenheit, as shown by the same thermometer. Then, putting H_2 for the height of the higher station above the lower, we have

$$H_2 = 60360 \{ \log. H - \log. H_1 - 0{\cdot}000044 (T - T_1) \} \left(1 + \frac{T_2 + T_3 - 64}{986}\right).$$

When rapidity of calculation is more desirable than great accuracy, the value of H_2 sufficiently exact for all practical purposes is given by the equation

$$H_2 = 56300 (\log. H - \log. H_1) \left(1 + \frac{T_2 + T_3}{900}\right).$$

If tables of logarithms are not at hand, and when the height does not exceed 3000 ft. the barometric reading at the higher station may be corrected by making $B = H_1 \left(1 + \frac{T - T_1}{10000}\right)$, from which $H_2 = 52428 \frac{H - B}{H + B} \left(1 + \frac{T_2 + T_3 - 64}{986}\right)$.

These formulæ are applicable also to the aneroid barometer, with the exception of the correction depending on the temperature by the attached thermometer. The aneroid barometer may be constructed in such a manner as will enable all corrections for the effect of its own temperature on its indications to be dispensed with. If it be required to correct the difference of level for variations in the force of gravity, the value already found for H_2 must be multiplied by

$$1 + 0{\cdot}00284 \cos. 2\lambda + \frac{H_3}{104{\cdot}50000}.$$

In the equation λ is the mean altitude of the two stations or points of observation, and H_3 the mean of their heights in feet above the level of the sea.

Flying or preliminary levels may be also taken by determining the boiling point of pure water by a sensitive thermometer. The boiling point falls very nearly at the rate of one degree of Fahrenheit, for every 543 ft. of ascent. The exact rate may be thus determined; Let F = height in feet, then $F = 517 (212° - T) + (212° - T)^2$, in which T is the boiling point in Fahrenheit's scale and F the height of the station where the experiment is made, above a station where the boiling point is 212°. To compare the levels of two stations the boiling point of pure water is to be observed at each, and the quantity F calculated by the formulæ for each of the boiling points. The approximate difference in level will be the difference of the values of F corrected for the temperature of the air.

The use of flying levels, besides affording general information with regard to the proposed route, is to determine the elevation of detached points of great importance respecting the cost and feasibility of the line. It is frequently at these spots where constructive works of great magnitude are required, and unless a tolerably approximate idea of their relative level can be previously ascertained, it is impossible to make an estimate of the expense of the whole undertaking. In an old country the levels are frequently made subservient to the plan, that is, that there are so many objects to be avoided in order to prevent incurring heavy compensation and other serious expenses, that the direction of the line is often of more importance than the levels and gradients. The reverse is the case in new countries and colonies. The direction of the line, so far as the land is concerned, is of no consequence. It is the question of the levels which virtually decides whether the line is actually practicable, and determines the route which it must follow.

Selection of Route.—In deciding on a project for a railway, the engineer will have to form an opinion as to whether the expenditure will be repaid, and to select the route which secures the greatest traffic, and at the same time involves the least expenditure. He has to decide whether the amount of traffic to be expected will warrant the construction of a first-class railway, or whether a railway of a lighter description will suffice, cheaper to construct, but of correspondingly less carrying power. Such problems involve statistical, political, and commercial considerations, as well as engineering ones.

There are certain items in the construction and maintenance of railways which are independent

of the route selected, but there are others which, on the contrary, are altogether dependent upon it. The various items which regulate the rate at which goods can be conveyed upon railways are as follows;—

1st. The interest on the capital expended during the construction of the line. As this charge, for a given line, is a fixed sum, its influence on the cost of transport will be in the inverse ratio of the quantity of traffic.

2nd. Of the cost of repair and maintenance of the railway, including the earthworks, the permanent way, the buildings, the rolling stock, and the apparatus employed in working.

3rd. Of the cost of police.

4th. Of the cost of traction, which is proportional to the traffic.

5th. Of the expenses of management and working, proportional in part to the traffic, and partly independent of the quantity of traffic.

On English railways only about 50 per cent. of the capital expended before the opening of the railway has been spent on the actual works of construction. Of the remainder about 20 per cent. on the average has been laid out in the purchase of land, about 10 per cent. in the purchase of carrying stock, and the remainder in law expenses, discounts, and other preliminary charges.

Of the gross receipts, taking one year as a sample, 7 per cent. was absorbed in maintenance of permanent way, 18 per cent. in locomotive and wagon expenses, 12 per cent. in traffic charges, and 10 per cent. in police rates and other expenses, amounting to 47 per cent. altogether, and leaving 53 per cent. for payment of dividends.

It is important to notice the relative proportions of these items, because they indicate the order of precedence of the questions to be considered in the selection of a line of railway. It is easy to show from these figures that the augmentation of the traffic holds the first rank amongst the considerations determining the choice of route, and that economy of construction takes precedence of questions depending on the expenditure of locomotive power.

For a colonial line the cost of construction bears of course a larger proportion to the gross preliminary expenditure; the cost of land may be reduced, and other preliminary items, unavoidable in an old country, vanish. In the construction of the Mauritius Railway the land cost 17 per cent. of the preliminary expenditure, and nearly the whole of the remainder was due to cost of construction and rolling stock. Obviously, in such a case, economy of construction is relatively of greater importance.

If all the traffic is between two terminal points, then the best direction for the road is the straight line joining them, because, other things being equal, the straight road being the shortest will be the cheapest to work, and the least expensive to construct. For through traffic the only reason for departing from the straight direction is the necessity of avoiding heavy works of construction; and the question whether a straight line involving difficult works, or a more circuitous but easier route is to be preferred, resolves itself into the question whether the annual saving of cost of carriage and maintenance, due to the less length of the more direct route, is greater or less than the interest of the excess of outlay due to its adoption. And since the annual saving of transport on the shorter distance will be proportional to the quantity of traffic, it is obvious that the greater the amount of the traffic, the more the outlay which may be incurred to secure the shortest road.

In the earlier railways in England, constructed at a time when the power of the locomotive was very limited, all other considerations were sacrificed with a view to the attainment of the most direct and most perfect line. Indeed, directness was held only second to the necessity of easy gradients. No expense in heavy works of construction was spared, either in shortening the line or reducing its gradients. Locke was the first to break through this rule, and his system, known at the time as the undulating system, was to follow as far as possible the undulations of the ground, and to diminish to the utmost the cost of construction, by avoiding heavy works. To that end he not only permitted his lines to deviate from the direct route, but he introduced gradients of 1 in 70 to 1 in 80, or five times as steep as the ruling gradient on the London and Birmingham, twelve times as steep as the ruling gradient of the Liverpool and Manchester, and nearly twenty times as steep as that of the Great Western.

All the tendency of railway engineering since Locke's time has been to follow the direction indicated by him; instead of ranking flatness of gradient first, directness second, and economy of construction third, in considering the route to be adopted, that order might almost be said to be inverted in all but exceptional instances of large and assured traffic.

Independently of quantity of traffic as affecting the outlay on a railway, the necessity of economy of construction becomes of paramount importance in new countries. In America it is often necessary to push forward a railway into new districts long before the traffic has assumed defined directions, or its future amount can be estimated with any certainty, and when capital for construction of an expensive line cannot be found. In such cases the railway has to be constructed as cheaply as possible, almost without regard to the effect of the sacrifices to secure that end on the ultimate cost of transport. The establishment of such a line is, in America, immediately followed by the settlement of population in the adjacent country, the introduction of industry, and the development of natural resources; and by the time the cheap structure is worn out the profits have usually been sufficient to replace it by a more durable and perfect one. Such a course, however, is not to be justified in a country where the population is tolerably fixed and the traffic can be estimated with some degree of certainty. In that case, the question between the cheaper and the more expensive route is, simply, in what way will the total cost of transport, inclusive of interest charged on outlay, be made a minimum?

When it becomes a question how far the railway shall deviate from the straight line, not only to reduce the cost of works of construction, but to secure increased traffic, the question is a still more complex one. If a railroad is very short, the larger proportion of its traffic is through traffic;

but the longer it is, the larger the proportion which the local bears to the through traffic. The majority of passengers do not travel more than 25 miles, and the same rule holds with freight. A straight and direct line serves best the through traffic between the terminal points, but it serves very badly the intermediate district. In England, in France, in America, and in India, the importance of the local traffic has proved much greater than was at first expected, and is now so much more generally recognized than it used to be, that it is impolitic and prejudicial to sacrifice the intermediate districts to the terminal ones. In India the local traffic pays much more than the through traffic, and it has in some instances been found worth while to make a considerable detour in order to pick it up, instead of leaving it to find its way to the main line, or attempting to serve it by branches. The real question in such a case is, how far will the reduction of the cost of carriage, due to the augmentation in quantity of the traffic, compensate for the increased expenditure in traction and maintenance of the longer line?

Gauge.—The gauge of a line depends upon several conditions, such as the gauge of lines already existing, which must be placed in communication with the proposed railway, the amount of traffic likely to be developed, the pecuniary condition of the country, and the local features of the route. The gauges at present of lines worked by locomotives vary from 1 ft. 11½ in. to 7 ft. ¾ in., the former being that of the Festiniog Railway, and the latter that of the Great Western. The latter may, however, be regarded as exceptional and obsolete, as it is rapidly giving place to the standard gauge of 4 ft. 8½ in. In the article Permanent Way, some particulars are given of the various gauges adopted in English colonies and elsewhere. A break of gauge, or the construction of some lines in the same country of a different gauge to others, is very undesirable, although this has taken place in India. The means by which to guard against this error, is not to construct the first lines in the country of a gauge in excess of the requirements of the traffic. It is easy in countries in which the land is not of any great value to lay down an additional line of rails, which will enable more trains to be run, when necessary, without necessitating an increase in the size of the locomotives and rolling stock generally. A broad gauge means a corresponding increase in the size of all the standing works of the line, and consequently an increased expenditure in their construction. Instead of adhering to any particular standard, the gauge of a line in a new country should be selected, as that which will be sufficient for the demands likely to be made upon it for many years by the traffic of passengers and goods. In Japan, for instance, a gauge of 3 ft. 6 in. has been adopted. The manner in which the gauge affects the standing works of the line, and the transverse area, will be apparent from an inspection of Fig. 6440 and Table I., in which all dimensions are in feet and inches.

6440.

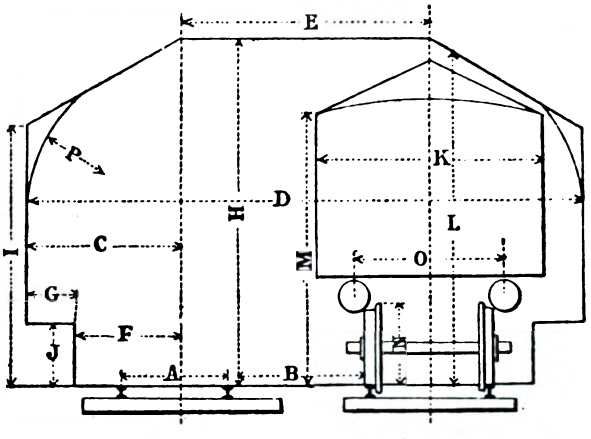

TABLE I.

Gauge.	A.	B.	C.	D.	E.	F.	G.	H.	I.	J.	K.	L.	M.	N.	O.	P.
Broad ..	7·0¾	6·0	7·0	27·5	13·5	5·7½	1·4¾	16·0	14·0	2·9	9·6	14·3	11·7	3·1	5·10	6·0
Standard	4·8½	6·0	6·7	24·3¾	11·1¼	4·7	2·0	14·6	11·0	2·0	8·4	13·6	11·7	3·4	5·8	2·0
Irish ..	5·3	6·0	8·2	28·0	11·8	4·9	1·7½	14·6	10·6	2·9	10·0	13·3	11·6	3·5	6·2	8·0
Indian ..	5·6	6·0	6·11½	24·10	11·11	5·2½	1·9	14·6	11·6	3·0	10·6	13·6	11·6	3·6	6·5	3·0
Prussian	4·8½	6·2¼	6·7	24·6	11·4	5·5	1·2	15·9	15·9	2·6	8·7	13·6	12·0	3·5	5·9	6·7

Although the wider the gauge, the wider the rolling stock, as a rule, yet the breadth of the carriages does not depend altogether upon that of the gauge, because the overhang, or the projection of the sides over the metals, may be varied to a certain extent, according to the opinion of the engineer. It is evident that with a gauge of very limited dimensions, if the overhang is considerably out of proportion, the carriages will rock very much, and dangerously so at high speeds. As the gauge diminishes, and the overhang increases, the whole system becomes approximated to a single rail with the rolling stock balanced upon it. The rocking or lurching of carriages becomes sometimes very serious, especially when the six-foot or ordinary distance between any pair of rails is reduced, as occurs at stations and at those spots at which junctions and sidings take place. Accidents have happened at these points by reason of the sides of the carriages coming in contact. In all cases the gauge is measured from the inside of the head of the rails. Wheels which are designed for one particular gauge will run over others in which the difference does not amount to more than an inch one way or the other.

Gradients and Curves.—The considerations which governed the adoption of gradients on ordinary roads were for a long time supposed to apply to the locomotive, and to fix the proper ruling gradient on railways at about 1 in 250. There has been much discussion as to the gradients which a locomotive was capable of ascending, and as to whether the power expended on the ascending gradients

was or was not recuperated on the descending ones. It was at no very distant period predicted by a leading engineer that the working expenses of gradients of 1 in 40 would amount to such a sum as to more than swallow up any possible receipts. And on the earlier lines, in several instances, where steep gradients could not be avoided, stationary engines were erected to draw up the trains by rope traction. Now the case of the locomotive is in many respects very different from that of a horse on a metalled road. The tractive power of the engine for a given effective steam-pressure is constant, and nearly independent of the velocity, and the adhesion is constant. Hence a reserve of tractive force for surmounting difficult parts of the line can only be obtained by working the engine over the other parts of the line at less than the full power of which it is capable, and therefore uneconomically.

But, on the other hand, the resistance on railways is not, like the resistance on roads, independent of the velocity. Hence an engine will take up a gradient, at a slow speed, the load which it is capable of drawing at a much higher speed on the level; and since, generally, some variation of speed may be permitted without objection, a compensation is thus afforded to the otherwise prejudicial influence of the gradient. Again, if the gradient is only a short one, then the locomotive may, so to speak, take the gradient at a run, and, by gradually expending in the ascent, part of the work accumulated in approaching it, may also take up a heavier load than would otherwise be possible. Both these considerations help to explain why the influence of gradients on the cost of traction on railways has been much less than the earlier engineers supposed would be the case. The most important consideration, however, is that the locomotive expenses form only about one-third of the whole expenditure on transport; and since the power expended on the gradient affects only this item of the expenditure of working the line, it may easily be seen that there may in other ways be compensation to such an extent as to quite hide the influence of the gradients. The Lancashire and Yorkshire is a line with very heavy gradients and with very heavy traffic; but neither the expenditure on maintenance of way, nor the expenses of traction a train mile, nor the proportion of the expenditure to receipts, differ much from that on other lines on which the gradients are much more favourable.

But when the inclines are long and the traffic heavy there is no doubt that steep inclines have a very great influence on that part of the total cost of transport comprehended under the head of locomotive expenses; and if a judgment is to be formed as to the desirability or not of permitting a heavy gradient, it must be by comparing the excess of cost of working due to the gradient with the saving in cost of construction, or in other ways which its adoption permits. Desgranges has shown, in the Bulletin of the French Society of Civil Engineers, how great is the influence of the Soemmering incline on the cost of working the railway on which it occurs; and similar results have been published in regard to the Giovi and Poretta inclines.

Let us suppose an engine of the maximum ordinary weight, say 48 tons. If all the wheels were coupled, and the coefficient of adhesion were taken at $\frac{1}{5}$, the adhesion would be in round numbers 1200 lbs. That the tractive force might be equivalent to this adhesion, supposing the cylinders 18 in. diameter, 24-in. stroke, and the driving wheels 4 ft. diameter, the mean effective steam-pressure would require to be 50 lbs. on the square inch.

Taking the resistance of a train at 10 miles an hour at 7 lbs. a ton, that of the engine at 13·5 lbs., with 1 lb. extra for friction, this engine would draw on the level a train load of 1600 tons. On an incline of 1 in 100 the train load would have to be reduced to 375 tons; on an incline of 1 in 40 it would have to be reduced to 137 tons, and on an incline of 1 in 27 it would only take up a load of 81 tons. Lastly, on an incline of 1 in 10 nearly, the engine would only be able to take up its own weight.

Now, practically speaking, the cost of the engine power would be the same to the mile whether the engine were dragging behind 1600 tons on the level, or only taking its own weight up in 1 in 10. It is obvious, therefore, that on railways the ruling gradient has a great influence on the locomotive expenses.

In the above instances the work of the engine was limited simply by the adhesion. Let us suppose, next, that in place of carrying a maximum load the engine is required to work at a maximum speed. In this case the work of the engine will be chiefly limited by the evaporative power of the boiler, but the gradients will have an equally striking influence. Suppose the same engine modified so as to have a single pair of driving wheels, the weight on which is 15 tons and the adhesion 3750 lbs., and let the engine be capable of developing 400 horse-power and work at a minimum speed on the gradients of 40 miles an hour. The tractive force of the engine will be $\frac{400 \times 33000 \times 60}{5280 \times 40} = 3750$ lbs. If the resistance of the train be taken at 20 lbs. and that of the engine at 20 lbs. also, then on the level $(48 \times 20) + (P \times 20) = \text{or} < 3750$, $\therefore P = \text{or} < 140$ tons.

On an incline of 1 in 100 $(48 \times 20) + (P \times 20) + (P + 48)\frac{2240}{100} = \text{or} < 3750$, $\therefore P = 40$ tons;

and on inclines greater than 1 in 37 the engine would be unable to maintain the speed with no train at all.

At the present moment the problem with engineers is not so much how to construct lines with easy gradients as how locomotives can be constructed to work gradients of maximum steepness. The Accrington incline of 1 in 37, the Oldham incline of 1 in 27, the Soemmering incline of 1 in 40, the Indian Ghât incline of 1 in 37, the Giovi incline of 1 in 36 and 1 in 27, have now been worked for years with ordinary locomotives. The navigation incline of the Taff Vale Railway, originally constructed for rope traction, is now worked by locomotives, the maximum gradient being 1 in 17·8, and the average 1 in 20 for half a mile. The engines which work this incline weigh, in working order, 36 tons, and they have six coupled 4-ft. wheels, 16-in. cylinders, 24-in. stroke, and work with a boiler pressure of 130 lbs. The maximum load they will take up the incline is 45 tons, and the regulation load 25 tons. The Mauritius Railway has gradients varying from 1 in 60 to 1

in 27, there being 2¼ miles altogether of the latter gradient, and 6163 ft. in a continuous length. The railway rises in all 1817 ft. in 16 miles, and descends an equal distance in 19 miles on the other side of the ridge. This railway is worked by tank engines weighing 48 tons with eight coupled wheels 4 ft. in diameter, the cylinders being 18 in. diameter, 24-in. stroke, and the steam-pressure 120 lbs. These engines take ordinarily five passenger carriages and a brake van, weighing altogether 42 tons, and on some occasions have taken 56 tons. The running speed of the passenger trains is 16 miles an hour, or, including stoppages, 12 miles; the ordinary load of goods trains in descending is 100 tons, though 120 tons have been taken. The ordinary running speed for goods trains is 12 miles, or, including stoppages, 9 miles an hour.

On the Soemmering incline of 1 in 40, engines of the same dimensions take up passenger trains weighing 130 tons, and goods trains of 175 to 200 tons. Engines of 43 tons weight take trains of 190 tons up the Glyn Neath incline of 1 in 47 for 5 miles; at 7 or 8 miles an hour a 56-ton engine has taken 300 tons at 6½ miles up the same incline. On the Copiapo Railway in Chili, which has been worked by locomotive power for six years, there are inclines of as much as 1 in 20, and in the direction of the heaviest traffic of as much as 1 in 23. This railway rises 2276 ft. in 14¼ miles and then descends 1990 ft. in 9½ miles. The engines are outside cylinder engines with six coupled 4-ft. wheels and a 4-wheeled bogie in front. The weight of the engine in working order is 32 tons, and the adhesion weight 24 tons; the ordinary load is 50 tons, exclusive of the engine and tender, and a load of 77 tons was on one occasion taken over the inclines of 1 in 23. It appears that in Chili an adhesion of one quarter the weight on the driving wheels has been attained, and that one-fifth is utilized with the ordinary load. But the climate of Chili is peculiarly favourable, there being little rain.

During the construction of the Baltimore and Ohio Railway temporary lines with maximum gradients of 1 in 10 were constructed over the tunnel ridges for the conveyance of materials. Engines weighing 27 tons took one car weighing 14 tons over these inclines. And over a similar temporary line with gradients of 1 in 16 and 1 in 20, the same engine took regularly, for six months, three cars, weighing 15 tons each.

In the face of these facts the opinion of engineers has undergone a complete revolution on the question of steep gradients, and perhaps the tendency at the present moment is to adopt gradients even steeper than is desirable. As the power of the locomotive has increased, the possibility of surmounting steep gradients has increased in the same ratio, and the question of ruling gradient is much less exclusively dependent on the available power, and much more dependent on the natural configuration of the country.

No one would adopt steep gradients from choice. Still, cases will arise where a certain liberty of choice of gradient is afforded, and this may arise in two ways. The engineer may have choice between a longer line with a flatter gradient, and a shorter with a steep gradient; or he may have choice between lines nearly equal in length, one of which is a surface line with heavy gradients, the other a line in which ease of gradient is secured by tunnelling or heavy works of construction. In either of these cases the primary question is, to decide which alternative renders the sum of the expenses of traction and interest on outlay a ton of load carried, a minimum, and in ascertaining that the cost to the train mile may be assumed as approximately constant.

The following approximate formula will be found convenient for estimating the train load which a given engine will carry, supposing all the wheels coupled. $P^1 = P^2$, then

$$P = \left(\frac{f}{\cdot 0000026\ V^2 + i + \cdot 0036} - 1 \right) P^1.$$

For large and heavy traffic at high speeds it is worth while to incur almost any expenditure to obtain the best gradient possible. If the traffic is lighter, or chiefly passenger traffic, but the speed still required to be great, a somewhat steeper gradient may be adopted, say 1 in 100 to 1 in 150. If the traffic can be worked at slow speeds the gradient may be greater still; 1 in 40 is the limit prescribed in the economical railway system in Norway. If the climate is such that a large coefficient of adhesion can be depended on, then the experience in Chili shows that inclines of 1 in 20 to 1 in 25 may be worked by ordinary locomotives. Finally, if we change the structure of the locomotive, as Fell has done, we may surmount gradients of 1 in 12. The less the individual weight of trains to be transported the steeper the gradient which may be permitted.

There is, however, one aspect of steep gradients which requires notice, and that is, the increased danger attending the working. A train, the resistance of which is 7 lbs. a ton, will descend an incline of 1 in 320 by its own weight, and on greater inclines its motion will be accelerated. The same happens to ordinary goods engines with coupled wheels on inclines of 1 in 100, and to passenger engines on inclines of 1 in 150 to 1 in 200. If the incline is a long one the acceleration in descending, due to gravity, may become dangerous, and the train may require to be controlled by the brakes, which involves a waste of power in friction and increased destruction of the permanent way. Now it appears that in fine, dry weather the retarding power of brakes is from 400 to 470 lbs. a ton of the weight on the wheels to which the brakes are applied; but that in misty weather the average retarding force is only 120 lbs. a ton, or $\frac{1}{15}$ of the weight. Hence, in misty weather, on inclines of more than 1 in 18 a carriage would descend by gravity alone even though its wheels were skidded, and in dry weather the same would happen on inclines of more than 1 in 5.

The distance in which a train could be stopped by the brakes in descending an incline of 1 in $1 \div i$, supposing them to be applied when the train is travelling at a velocity of V miles an hour, would be in feet $V^2 \div 30\ (f^1 - i)$, where f^1 is the proportion of the resistance caused by the brakes to the weight of the train. In wet weather, on inclines like those on the Mauritius Railway of 1 in 27, supposing the velocity attained before the application of the brakes to be 20 miles an hour, and with the brakes applied to all the wheels of engine and train, the distance required to bring the train to rest would be $20^2 \div 30\left(\frac{1}{18} - \frac{1}{27}\right) = 720$ ft.

It is not, however, usual to brake the engine wheels except in emergencies, because the action of the brakes has been found to heat and loosen the wheel tires. Now, for goods trains with a 48-ton engine and 80 tons train, the coefficient of resistance would be reduced to $\frac{1}{18} \times \frac{80}{128} = \frac{1}{25}$. In that case, with all the train wheels braked, the distance required to arrest the train on an incline of 1 in 27 would be increased to $20^2 \div 30\left(\frac{1}{25} - \frac{1}{27}\right) = 4500$ ft. During less than two years' working, trains have got beyond control on the Mauritius Railway five times, attaining once an average speed over four miles of 45 miles an hour, but in other instances terrible accidents have occurred from this cause.

Resistance of Curves.—Curves increase the resistance also in a degree not very well known. Rankine found the additional resistance due to curves, for light passenger-carriages, with truly cylindrical wheels to be in lbs. a ton, 1·4 ÷ radius of curve in miles. But he points out that if the wheels are not truly cylindrical, but somewhat coned, as is more common, the resistance on the level line will be increased, and that on the curves diminished, so that the difference between the resistance on the level and on curves will be less felt.

Experiments in America by Latrobe give for the resistance on curves in lbs. a ton, 0·578 ÷ radius in miles.

MM. Vuillemin, Guebhard, and Dieudonné found no sensible increase of resistance with passenger trains at low speeds on curves of more than 75 chains radius. At 35 miles on a curve of 75 chains the resistance of a passenger train was increased by 5 per cent., or the resistance due to the curve was 0·8 ÷ radius in miles. For goods trains, the additional resistance at 16 miles on curves of 50 and 40 chains was about 1·5 ÷ radius in miles. The passenger trains consisted of twelve carriages, and the goods trains of forty wagons. The increase of length of train appears to increase the frictional resistance on curves by rendering the line of traction oblique.

Assuming, as sufficiently accurate for the purpose, that the resistance from curvature is inversely as the radius, it follows that there is the same resistance experienced in running 1 mile of a curve of 2 degrees as in running 2 miles of a curve of 1 degree. In both cases the number of degrees of deflection is the same. The total resistance is proportional to the whole number of degrees traversed, and is independent of the radius or length of the curve theoretically considered.

The average of numerous experiments would seem to show that the resistance upon a 10-degree curve, or a curve of 574 ft. radius, at a speed of 20 miles an hour, is double that upon a straight line.

In traversing therefore a 10-degree curve, a mile long, we should consume an amount of power sufficient to haul a train 2 miles upon a straight line. The length of a 10-degree curve is, however, only 574 × 2 × 3·1416, or 3606 ft.; and this, being a whole circle, contains 360°. The proportionate number of degrees in a mile, or 5280 ft., is 527; which is thus the number of degrees, whatever the radius, consuming an amount of power which would haul a train 1 mile on a straight and level road at 20 miles an hour; and this is therefore the equating number for comparing the curvature upon different lines, just as 24 ft. was the equating number for the comparison of gradients at the same speed. But, as in the case of grades, a double expenditure of power does not involve a double cost. We, however, increase the cost of operation more in doubling the resistance by curvature than we do in doubling it by gradients, since the effect of curvature upon the wear and tear of the engines, cars, and track, is greater than that of gradients. Taking the operation of the 1500 miles of railway in Massachusetts as a basis, and adding, for a double expenditure of power, demanded by curves, 25 per cent. to the cost of repairs of the roadway, engines, and cars, and 100 per cent. to the cost of fuel, we shall increase the whole expense of operating and maintaining the road by about 25 per cent. If therefore a mile of road containing 527 degrees of curvature demands the exertion of double the power required upon an equal length of straight line, and if the exertion of a double power involves 25 per cent. more expense, the number of degrees consuming an amount of money sufficient to operate and maintain 1 mile of road will be $\frac{100}{25}$ of 527, or 2108 degrees; which is thus the equating number for curvature at a speed of 20 miles an hour. This number, however, being based upon a double resistance, will vary according to the actual resistance upon a straight line, and thus according to the speed, as shown in the following Table, where column 3 gives the radius of the curve upon which the resistance is double that upon a straight line, these radii being made inversely to the resistances in column 2. The number of degrees of deflection in column 4 is found by the proportion, rad. (col. 3) × 3·1416 × 2 to 5280 as 360° to No. in col. 4; and the numbers in column 5 are $\frac{100}{25}$ of those in column 4, and may be used as the equating numbers for curvature.

TABLE II.

Speed in miles an hour.	Resistance in lbs. a ton.	Radius of Curve of Double Resistance.	Corresponding No. of Degrees in a Mile.	Equating No. in Degrees.
15	9·3	636	476	1904
20	10·3	574	527	2108
25	11·7	506	598	2392
30	13·3	444	682	2728
40	17·4	340	890	3560
50	22·6	261	1159	4636

Inasmuch as the expense of operation is more increased by sharp than by easy curvature, just as it is more increased by steep than by light gradients, we should vary the equating number, in any comparison of surveyed lines, as we varied the equating number for gradients in the example upon a preceding page. It is, however, impossible to say, with any exactness, what this variation should be, since we have no means of knowing what effect the sharpening of the curvature has upon the working expenses. The general effect is, of course, to make the equating number smaller for sharp curves, and larger for curves of large radius. Suppose we have surveyed two lines, the first being 100 miles long, and having 4216 degrees of curvature, and the second being 98 miles long, and having 8432 degrees of curvature. At a speed of 20 miles an hour, the equating number is 2108 degrees, and the equating distances $100 + \frac{4216}{2108}$, or 102 miles; and $98 + \frac{8432}{2108}$, or 102 miles. If we assume the cost of operation to be as the equated length, we may compare any number of routes, by adding in each case the cost of construction to the operating expense of the equated length, capitalized. From what has been said, it may be seen how important it is to guard against the introduction of gradients and curves without carefully considering their cost. We have regarded gradients and curves only as demanding a greater locomotive power, and as causing an increased wear and tear of track and machinery.

When, however, a road is liable to be worked up to its full capacity by gradients or curves it becomes a much more serious matter. The capacity of a road being limited by the number and weight of trains that can be run over it, if by increasing the resistance by gradients or curves, the trains are reduced in weight one-half, the capacity of the road is reduced by the same amount, and the cost of transportation is doubled.

In estimating the amount to be spent in reducing gradients or curves, we are of course to regard the effect of these elements upon the cost of operation in the same manner as above stated in the case of simple distance; but the interest upon the cost of construction which applies to distance, does not apply to gradients or curves. Thus, while a certain number of feet of ascent, or of degrees of curvature, may be regarded as equivalent to a mile of distance, in the matter of operation, they are less objectionable by the amount of interest upon the cost of building a mile of road.

Cost of Transport over any given Line.—Having decided upon the line of railway to be adopted, it will be useful to make a tolerably accurate estimate of the cost of the carriage over it, after having ascertained the necessary data. The cost will be nearly constant to the train mile, and its amount a ton of paying load will depend, first, on the gross load which the engine will draw, and, secondly, on the ratio between the paying and the non-paying load. Put W for the gross weight of the train in tons, exclusive of engine and tender, which the engine will draw. Let R = the resistance of the train in lbs. a ton, W_1 = the weight in tons of the engine and tender, R_1 = the resistance of the engine and tender as vehicles in lbs. a ton, V = the velocity of the train in miles an hour, N = the number of effective horse-power which the engine can develop exclusive of the friction of the machinery, W_2 = the adhesion weight of the engine in tons, and F = the coefficient of adhesion. The effort in running will be $W \times R + W_1 \times R_1$ in lbs. The work a second expended by the engine is $1{\cdot}47\ (W R + W_1 R_1)\ V$ in *foot lbs.* In order that the engine may move the train, the power must not be less than the latter quantity, and the adhesion not less than the former, so that to fulfil these conditions we have $1{\cdot}47\ (W R + W_1 R_1)\ V = \text{or} < N \times 550$, and also $W R + W_1 R_1 = \text{or} < 2240 \times F \times W_2$. If the line, instead of being level has a ruling gradient equal to G, then the above equations become $1{\cdot}47\ \{ W R + W_1 R_1 \pm 2240\ (W + W_1)\ G \} = \text{or} < 550\ N$ and $(W R + W_1 R_1) \pm 2240\ (W + W_1)\ G = \text{or} < 2240\ F\ W_2$. In finding the value of R an approximate value for the gross weight of the train must be assumed, the weight of the train must then be calculated, and if the latter result does not agree with the former, the new weight must be used in finding R, and a second approximation obtained.

Experiments have proved that for very low speeds the resistance of a train of carriages or wagons is simply proportional to its weight under given conditions, but that at higher speeds it increases rapidly. For slow speeds the value of R is about 7 lbs. a ton. Making W as before the gross weight of the train in tons, R the resistance in pounds a ton, and V the velocity in miles an hour, we have the following values for R according to the conditions of each particular case.

1st. For goods trains at 8 to 20 miles an hour,

$$R = 3{\cdot}64 + {\cdot}177\ V \text{ (for axles lubricated with oil)},$$
$$R = 5{\cdot}08 + {\cdot}177\ V \text{ (for axles greased)}.$$

2nd. For passenger and mixed trains, at speeds of 20 to 30 miles an hour,

$$R = 4 + {\cdot}283\ V + \frac{{\cdot}283\ V^2}{W}.$$

3rd. For passenger trains at 30 to 40 miles an hour,

$$R = 4 + {\cdot}283\ V + \frac{{\cdot}187\ V^2}{W}.$$

4th. For express trains at 40 to 50 miles an hour,

$$R = 4 + {\cdot}495\ V + \frac{{\cdot}126\ V^2}{W}.$$

The resistance of the engines and their tenders, considered as vehicles, is greater than that of the train. The experiments on the friction of engines when drawn along the line by another engine, are less complete than those on the friction of carriages and wagons, but it appears that the resistance of goods engines and tenders is about 2½ times as much a ton as that of the train; and

the resistance of engines with one pair of driving wheels is about $1\frac{1}{4}$ times that of the train, a speeds not exceeding 30 miles an hour.

Within this limit the following formulæ give the resistance of engines, considered as carriages, that is, independently of the friction of the working parts when under steam.

Goods engine $R_1 = 9{\cdot}1 + {\cdot}442\,V$,
Mixed engine $R_1 = 5{\cdot}5 + {\cdot}265\,V$,
Express engine $R_1 = 4{\cdot}55 + {\cdot}221\,V$.

At higher speeds the resistance of the engines, considered as vehicles, probably becomes sensibly equal to that of the train. If, instead of being drawn by another engine, as a vehicle, the engine has itself to draw the train, then the friction of its working parts increases, and a further addition is made to the resistance. Vuillemin, Guebhard, and Dieudonné have found, by calculating the actual engine power in one instance, that about 15 per cent. of the whole power of the engine was expended in the transport and friction of the engine itself, so that the tractive force on the draw-bar was 0·85 only of that calculated from the steam pressure. A common allowance for the extra friction of the working parts of the engine, when running with the load on, is 1 lb. a ton of the engine weight.

Thus far the resistance on the level has been considered; if, instead of being level, the line has a gradient, then the action of gravity increases the resistance, if the train is ascending, and diminishes it if descending. If the gradient is 1 in $\frac{1}{\theta}$ so that θ is the sine of the angle of inclination, and R is the resistance on the level, then the resistance to ascending the gradient is in lbs. a ton $R + 2240\,\theta$, and in descending $R - 2240\,\theta$.

An approximate formula by Clarke for train resistances is convenient for calculation. If R_1 = the resistance of engine, tender, and train in lbs. a ton of gross weight, then

$$R_1 = \frac{V^2 + 1368}{171} = 8 + \frac{V^2}{171}.$$

Similarly, if R_2 = the resistance of the train alone in lbs. a ton,

$$R_2 = \frac{V^2 + 1440}{240} = \frac{V^2}{240} + 6.$$

These formulæ do not take into account the friction of the machinery. The resistance due to the friction of the working parts of the engine with the load, together with that of the engine and tender considered as vehicles, is given by Clarke as in lbs. a ton weight of engine and tender. Calling this resistance R_3, we have the equation

$$R_3 = \left(\frac{V^2}{240} + 6\right) + \left(\frac{V^2}{600} + 2\right)\frac{W + W_1}{W}.$$

In this equation the first quantity $\left(\frac{V^2}{240} + 6\right)$ is the resistance of the engine and tender as vehicles, while the second quantity $\left(\frac{V^2}{600} + 2\right)\frac{W + W_1}{W}$ represents the resistance due to the friction of the machinery.

Estimate.—As the object is to reduce the cost of the line to a minimum, the gradients should be laid out so as to balance the respective quantities in the cuttings and embankments. Moreover, in laying down the gradients, attention must be paid to all details which may affect the cost of the work, such as the heights of floods, and the sections of the roads which have to be crossed either by an under or over bridge. At points where it is proposed to place stations, the gradients for a length of 7 or 800 ft. must be flat, if it is not possible to introduce a horizontal piece of that length. In determining when tunnels are to be made, regard must be had to the means of running out the material supposing an open cutting were to be substituted. The simplest case is that in which a tunnel is made instead of a cutting which would be run to spoil, and the height at which it becomes cheaper to substitute the tunnel may be thus found.

Let H = the height in feet, B the base of the cutting, R the ratio of the slopes, P the price of the cutting a cube yard, and P^1 the price of the tunnel a yard run. The price of the cutting a yard run will be given by the equation $P(BH + RH^2)$, which by the question must be equal to P^1, so we have $H(B + RH) = \frac{9 \times P^1}{P}$. Solving the quadratic we finally obtain $H = \sqrt{\frac{9 \times P^1}{P \times R} + \frac{B^2}{4R^2}} - \frac{B}{2R}$. Instead of the cutting being run to spoil, if it should be wanted to make up an embankment, the cost of the side cutting thus required must be charged against the tunnel in the estimate of its cost. The principal items in the estimate of a line of railway, not including the locomotives and rolling stock, are as follows;—Excavation, soiling and sowing slopes, fencing, road metalling and pitching, ballast, boxing, public and farm road level crossings, bridges, tunnels, diversion of streams and roads, culverts and drainage, laying the permanent way, maintenance of way. It will generally be found cheaper to divert roads and streams instead of building bridges either under or over them. In the latter case the interests of mill-owners and riparian manufacturers must be taken into consideration.

Staking and Setting Out the Line and Works.—The chain used is generally either the 66-ft. or 100-ft. chain. The latter possesses many advantages over the former, especially in the convenience

it affords in calculations of estimates and gradients. The only disadvantage the 100-ft. chain labours under is, that it lacks whatever convenience is supposed to appertain to the fact of 10 square statute chains being equal to an acre; but in reality this is of no account. The first thing to be done in the field is, to mark out the centre line of railway, putting in a stake at every distance of 100 ft., or whatever may be the length of the chain used. The centre line of railway, no matter how curved, may be considered as a series of intersecting straight lines joined by curves, and the process of staking is based on this view. For ranging straight lines, or setting out curves, the transit theodolite is the proper instrument to employ. A line is transferred from the map to the ground by putting up five or six poles, or more, according to its length, at well-defined points on it, such as the crossing of a fence at a measured distance from another fence. When these are erected with flags on them, two are selected to represent the line, and the rest taken down.

In placing stakes for any structure, they should be so far outside the work that they will remain undisturbed during future operations. The stakes for excavations for foundations should be placed at the angles, and the working points must be so placed that lines stretched from one to the other will define the permanent superstructure. Two stakes placed at a moderate distance apart upon the land will determine any line on water, and two sets of stakes, upon different lines on land will by their intersection determine any point upon water with all the accuracy necessary for practical purposes. A permanent bench mark or B.M., should be established and accurately checked at the beginning and ending of all cuttings and embankments, and intermediate ones put in at intervals of about 5 or 600 ft. These B.Ms. should also be fixed at a short distance from every bridge, viaduct, or other permanent structure on the line, so that the requisite levels can be given to the workmen with precision and facility. All bench marks should be registered for future reference at any time.

The ranging the straight portions of a line is so simple an affair, that with ordinary care and attention an error is scarcely possible; it is in the curves that errors are liable to be made, which are often not perceived until half the curve is laid out, and even sometimes are only discovered by the curve not coming in at its proper springing point, thus necessitating a repetition of the process of putting in the curve. Of the numerous methods at present known, some have been furnished by scientific persons laying no claims to professional practice, and consequently are of a purely theoretical nature; while others, though practically available, are only calculated to meet the requirements of such very exceptional cases that their utility is exceedingly questionable. Excluding these as for obvious reasons unsuitable to the present subject, the remainder may be classed under two heads;—1st, the methods by offsets which dispense with the use of an angular instrument; and 2nd, the methods which require the use of such instruments, or the methods by angles, as they have been called. In laying out curves by the former methods the necessary instruments are chain, ranging rods, offset-staff, or tape, where the offsets exceed 10 ft. in length. In the latter the offset-staff is replaced by a theodolite, plain or transit; or a portable altitude and azimuth instrument might be used if a theodolite could not be obtained, though the preference should always be given to the theodolite as the proper instrument for laying out curves by the methods of angles. In the following investigation we shall take Rankine's method as the best example of putting in curves by means of angles, partly because this elegant and generally useful method is becoming more and more adopted every day; and partly because the other examples of a similar kind are based upon the assumption that the springings, that is the commencement and termination of the curve, or each springing, and the intersecting point of their tangents, are visible from one another—a condition which rarely occurs in practice. In the diagram, Fig. 6441, let S S_1 be the terminations of two straight portions of a railway which are to be connected by the curve S P S_1; S S_1 will thus be the two springings of the curve, P a point in the middle of the curve, commonly but erroneously called the secant point, and I the intersecting point of the tangents to the curve, or straight portions of the line.

6441.

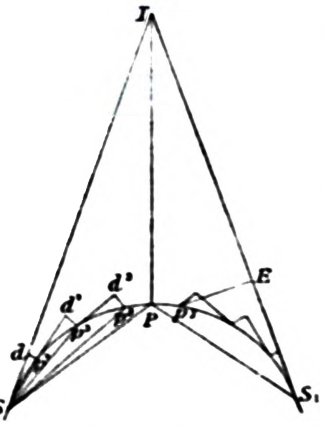

It may be observed that in all the methods included under the first head, where no angular instrument is employed, the springings cannot be obtained with any great pretensions to accuracy, for they must of necessity be taken from the plan. We shall suppose the staking out of the line to have been proceeded with as far as S, which will be the commencement of the curve or first springing, and that the stakes are driven at regular intervals of 100 ft. apart, both in the straight and curved portions of the line; we shall also assume, for simplicity's sake, the point S to be at one of these stakes, although it is right to mention that when the springings are obtained by the use of a theodolite,—that is, generally, by observing the angle of intersection S I S_1, Fig. 6441, calculating the length of the tangent I S, and chaining to the point S,—the chances are that it will never coincide with one of the 100-ft. stakes; on the contrary, by the methods by offsets where S is assumed, it would be sufficiently accurate in the majority of cases, and far more convenient, to take one of the regular stakes as the springing, and thus save the calculation of an additional offset.

In Fig. 6441 let p_1, p_2, p_3 be points in the curve 100 ft. apart; and let us now examine the manner in which their positions are determined, confining our attention, for the moment, to the left-hand half of the figure, which will serve to demonstrate the principles of Rankine's method and the common method by offsets. In the latter method the measured distances S d, p_1 d_1, p_2 d_2, and in the former S p_1, p_1 p_2, p_2 p_3, are assumed equal to the arcs, S p_1, p_1 p_2, p_2 p_3. This is practically correct within certain well-known limits, and when necessary the error can be reduced, either by

calculation, or by driving the stakes closer to one another, say 50 instead of 100 ft.; this, however, is not required except in very sharp curves. By the method of offsets the point p_1 is obtained by chaining the distance S d = 100 ft., and laying off at right angles the calculated offset d p_1; similarly the point p_2 is obtained by chaining p_1 d_1, and setting off d_1, p_2, and so on. By the other method, suppose the theodolite planted at S, the angle I S p_1 is laid off = angle for one chain, and the chain stretched from the point S; where it intersects the line of direction given by the instrument will be the required point p_1; the point p_2 is obtained by setting off the angle I S p_2 = twice the former angle, and intersecting the line of direction by the chain, one end being firmly held at the last obtained point p_1; and so on until the nature of the ground renders it necessary to remove the instrument to one of the stakes whose position has been previously determined, when the same process is resumed and continued to the end of the curve.

It is evident that by the former method the position of any point in the curve depends absolutely and entirely on the position of the preceding ones; this, however, is not the case when the theodolite is used; for, take the point p_2 for instance, the line of direction of this point is given by the angle I S p_2 and is totally independent of the position of the point p_1; and it should be observed that the lines of direction are obtained with a precision which the most practised and dexterous manipulation of the chain and offset-staff can never attain.

It is true, notwithstanding this, that any error in the chaining would certainly produce an error in the position of the point p_2; but, in our present comparison, it is equally just to assume the errors incidental to chaining as common to both methods, or, what amounts to the same, to consider the chaining accurately performed. We then have the accuracy of laying off the offsets balanced against the accuracy of the theodolite. The difficulty of performing the former correctly increases with the length of the offsets employed; or supposing the measured distances constant, inversely as the radius; the reverse happens with the theodolite, for, as the angles to be laid off are thus increased, the lines of direction are all the more likely to be accurate. Progressive errors are common to both these methods, but the points P and S_1 act as certain and reliable checks in the latter, respecting both distance and direction; these checks are wanting in the former method, and in fact all that can be done is to lay out the curve as accurately as possible, and take the chance of it coming in at the point S_1, which chance, especially if the curve be a long one, is very small indeed, as may be imagined, when the inventor admits that in many cases "the curve has to be frequently retraced several times before it can be got right."

There are certain exceptional cases, however, in which this method, on account of its requiring so few preliminary calculations and lines on the ground, is valuable; as, for instance, where any intermediate stakes in a curve have been lost or destroyed, as frequently occurs during the progress of the works of a line. By simply producing the chords joining any two stakes, and laying off the correct distances and offsets, the missing stakes can be restored with ease and facility; also in road approaches, road diversions, and all similar instances where the curve is short and great accuracy not required, this common method will be found very useful. In order to obviate the progressive errors arising from using such short distances as one chain, greater lengths may be taken and the proper offsets measured from them; but, as the regular stakes would have to be put in afterwards, this modification of the preceding method, besides being liable to the same errors, involves the absolute necessity of putting in the curve twice at least.

The right-hand portion of Fig. 6441 serves to show the demonstration of this; the errors due to progression being reduced by calculating the distance S_1 E, so that the measured offset E p_3 may serve as a check on the point p_3, one of the regular stakes to be afterwards filled in. It may be urged as an objection to the method by angles, that a great deal of inconvenience and delay is incurred in chaining the tangents I S and I S_1, Fig. 6441, in order to obtain the accurate position of the springings of the curve S and S_1; these points, however, may be accurately found in another manner whenever the middle point P in the curve is previously determined; for let the instrument be set up over P, and the angles I P S and I P S_1 laid off, each being equal to 90° plus half the angle in the whole curve, which give us the lines of direction P S and P S_1, and all that remains is to produce them until they intersect the two straight portions of the line in S and S_1; the nature of the ground will be the best guide respecting which of these means should be employed for the above purpose.

Another example of the methods by offsets is shown in the diagram, Fig. 6442, in which S P S_1 is the curve, and the remainder of the figure is self-explanatory. Taking the left-hand portion of the diagram first, it will be seen that the distances are measured along the tangent line S_1, and the offsets measured perpendicularly, which, it is manifest, in long curves of small radius, would assume such lengthened proportions as to render it impossible to lay them off accurately. As a rule, to ensure the proper degree of accuracy in the points of the curve in the example in Fig. 6442, the length of the curve should not exceed one-fourth of its radius, so that this method becomes inapplicable to curves possessing radii of lengths greater than from one-eighth to one-quarter of a mile, which last is even a very short curve. This example has an advantage over the first described, Fig. 6441, inasmuch as the progressive errors cannot go beyond half the curve, for the offsets for the remaining half are obtained from an independent datum, namely, the other tangent line S_1 I; the liability to error is also further lessened in consequence of the direction of the lines along which the distances are measured remaining constant instead of requiring to be changed for every offset, as in the example given before. This advantage is partially lost in long and sharp curves, when, in order to keep the lengths of the offsets within proper limits, it becomes necessary to run two or more tangent lines as base lines to measure the offsets from, as shown on the right-hand portion of Fig. 6442; in fact, it amounts to this, that in order to reduce the chances of error in one direction we are compelled to incur the chances of making them in another. In the place of measuring the offsets perpendicularly to the tangents, they may be set off in the radial direction whenever the centre of the curve is visible from the necessary portions of its circumference; but this is a case which very rarely occurs in practice. When the curve is short and the radius large, these two methods approximate very closely

to one another, for the difference between the offsets measured perpendicularly and those measured radially to the tangents becomes very small.

6442.

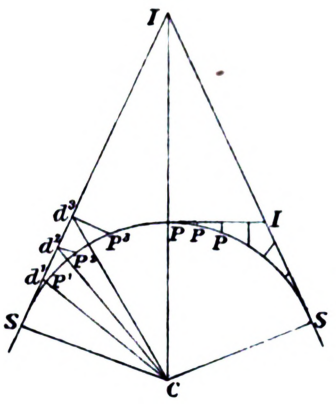

6443.

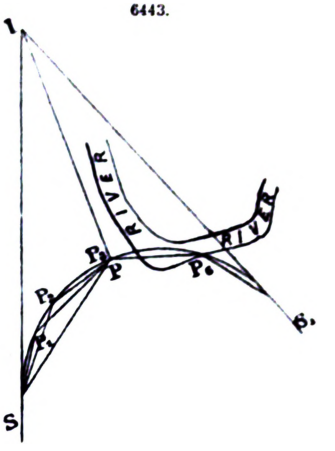

There is another example of laying out curves by the method of angles which is worthy of notice, though, in reality, a modification of the method mentioned above; the same principles and preliminary calculations are available, but the position of the points is determined by the intersection of two lines of direction given by two theodolites working at the same time, the intermediate chaining being dispensed with. The diagram, Fig. 6443, will serve to render this clear. Let S P S_1 be the curve, and we will take a case in which, as often happens, the springings, though not visible to one another, can be seen from P, the middle point of the curve. Suppose it is required to put in the stake p_2; let one theodolite be set up at S, and the other at P; by the former let the angle I S p_2 be laid off, and the line of direction S p_2 obtained. The line P p_2 is similarly obtained by the latter instrument, and the point of their intersection is the position of the stake p_2. This method has the advantage of all others in being perfectly independent of the irregularities of the ground, but is very seldom used as it requires the services of two engineers, and one is generally considered sufficient for the staking out of each allotted portion of a line of railway; moreover, unless a skilful assistant were employed capable of comprehending the method, in lieu of an ordinary chain-man, too much time would be wasted in shifting about, before the point of intersection of the lines of direction of the two instruments could be determined. It is clear, however, that in certain cases where it was required to obtain the position of a stake which could not be chained to, in the ordinary manner, it might be well worth the time of the engineer to first range the line of direction by laying off the proper angle for that stake, and then shift his instrument to some other previously determined point in the curve, and lay off another line of direction, their intersection giving the required point. For instance, let it be necessary to put in the stake p_6 in the right-hand portion of Fig. 6443, which comes on the bank of a river through a part of which the line goes; suppose the instrument set up at P and the line of direction P p_6 ranged, then removed to the point S_1 and S_1 p_6 obtained, and the position of p_6 is determined.

Most of the formulæ and calculations required for the different methods described are to be found in text-books on the subject; but the following general formula for the method of angles will be found useful from its great simplicity and facility of calculation. Let a = any length of arc, r the radius of the curve, and θ the required angle for that length of arc; then $\theta = \frac{a \times 28{\cdot}648}{r}$, θ being the angle between the chord and tangent of the arc, and thus obtained in degrees and decimals. Putting $a = 100$ ft., we have in round numbers $\theta = \frac{2865}{\text{radius of curve}}$. In order to apply this formula to a practical example, the following proof is adduced;—

In Fig. 6444, let the arc A B C be portion of a railway curve which it is required to lay off by Rankine's method; that is, by means of the angle contained between its chord and tangent. Let A I = the tangent we use in this case, and A C = chord of arc; a = length of arc A B C, R = radius of curve, and θ = angle required. We have the following proportion; $\theta° : 45° :: a : \frac{\pi R}{2}$, π = ratio of circle to diameter = 3·1416, from which we obtain

$$\theta = \frac{90\,a}{\pi R} = \frac{a}{R} \times 28{\cdot}648.$$

6444.

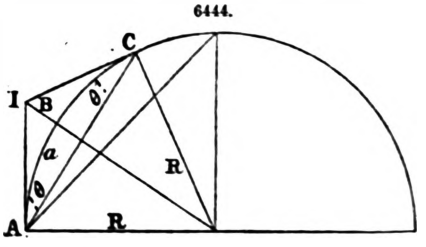

This equation gives the value of θ in degrees and decimals for any length of arc, thus being of service in the finding of the angle for what is known as the odd distances.

Supposing θ to be known, as it always is for the whole curve, by transposing the equation we find the following value for the length of the arc; $a = \frac{\theta \times R}{28{\cdot}648}$, bearing in mind that in both these

equations a and R must be in the same terms. By means of these two equations we obtain very important data for laying out curves by this method, without requiring the use of tables of logarithms or natural sines, very valuable, but, to say the least, very troublesome aids to calculation in the field. If in the formula we put $a = 1$ chain, and multiply the right-hand side of the equation by 60, we obtain for θ the following value in minutes and decimals; $\theta = \frac{1719}{R}$. This will be found a very convenient and useful formula to use in the field, when text-books and tables of logarithms are not always at hand.

Setting Out the Side Widths.—An ordinary method of setting out the side widths on the ground is by a tentative process of combined levelling and calculation, which is nothing better than a mere rule of thumb. A table should be made out from the cross-sections of the line, which are taken as often as the character of the ground requires, and the distances set out at right angles to the centre lines. When the land is level, the side widths are readily obtained by adding to the height of the cutting or embankment, multiplied by the ratio of the slopes, a constant, which depends on the width of the formation level and the description of fence put up. When the land is sloping transversely to the direction of the line, the side widths must be taken from the cross-sections, and measured horizontally on each side of the centre. The side widths are always laid off at every stake along the line, and where the ground is very rough, at intermediate distances also.

Setting Out Culverts.—The length of a culvert which passes under an embankment is less than the distance between the bottom of the opposite side slopes, and may be thus found. Put L for the length of the culvert in feet, H for its height in feet, H_1 for the height of the embankment, B for the breadth of the embankment at top, and R for the ratio of the slopes; then $L = (B + 2RH_1) - 2RH$. When the natural surface of the ground is horizontal, the length of any structure passing under an embankment will lie half on each side of the centre line. When the natural surface is inclined, the ends of the structure will be at different distances from the centre line, according to the slopes of the ground. This is seen in Figs. 6445, 6446, the first of which represents the section, and the second the plan, of an embankment. The lines S S and O O, representing the ends of a culvert passing beneath the embankment, are seen to be at different distances from the centre line. The position of the points S and O may be found by first getting from the tables of side widths the points A and D, and measuring in from these points the distances A S and D O, depending upon the slopes A B and A D. In the case of the upper end, the distance of S S from A will be less than if the natural surface was level; at the lower end, the distance from D to O will be greater. Having found the distances of S S and O O from the centre line, we get the position and length of the wing walls of the culvert by drawing a line from S to any desired angle to intersect the slope A A; and upon the lower side of the embankment we get, in the same manner, the lines O D, O D, the latter being, of course, longer than the wings upon the upper side A S, A S.

6445.

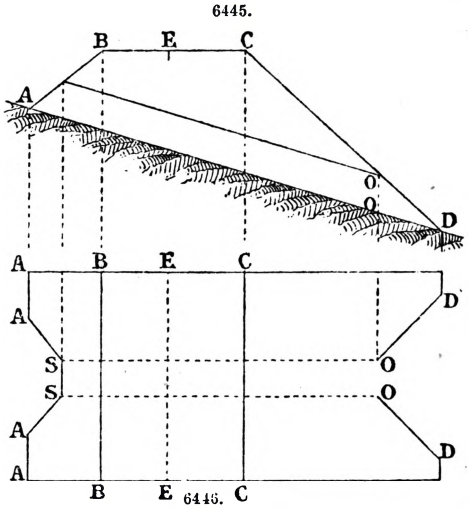

6445.

Setting Out Bridge-work.—In laying out the abutments for bridges, there are numerous cases to be considered; as, whether the bridge is on the square or on the skew, upon a level or a gradient, upon a curve or a straight line, and whether the natural surface is horizontal or inclined. The position and form of abutments and wing walls depend so much upon the various conditions affecting each particular case, that any attempt to lay down general rules for such work would be of little use.

In a curving viaduct consisting of a series of arches which exert a thrust upon the masonry, the piers should be made radial to the centre line of the curve, and the springing lines should be made parallel to the axes of the arches.

Calculation of Acreage.—The acreages to be calculated are always small, seldom exceeding a couple of acres, excepting in the case of considerable demolition of property. It will be found that the calculations can be made in feet as readily as if the divisions on the scale represented links. But should it be preferred to calculate in links, the operation can be effected by having a corresponding scale made to measure with. Thus, if the plan is plotted to a scale of 200 ft. to 1 in., a scale divided with 30·303 divisions to the inch will enable the measurements in links to be taken off. When all the measurements are made in feet, the advantages of the 100-ft. chain are so evident as to completely outweigh any slight convenience which may result from having the plan plotted to links. The acreage is usually taken out in statute measure, and is so marked on the plan and sometimes in plantation measure also.

Setting Out Tunnels.—The maintaining of a correct centre line for a tunnel is a very important operation, and one requiring the greatest care. The fixing of the line at the bottom of shafts demands every precaution, owing to the short distance between the only points that can be transferred from the surface to the bottom. The centre line of the road is first run over the ground to be tunnelled, fixing exactly the position of the shafts. To transfer this line from the surface to the bottom when the shafts are completed, let two posts be sunk into the ground a few feet apart, one being on each side of the centre line, at a short distance from the opening, so as to be undisturbed by the progress of the work. Upon the opposite side of the shaft let two more posts be fixed in the same manner. Place a stout cross-bar in a horizontal position upon each pair of posts, and upon the

side of each bar fasten a stiff piece of metal, which shall have a V-shaped notch cut in it. The two notches being so adjusted that the bottoms of the V's shall be exactly upon the centre line of the tunnel, pass a steel wire through them, and stretch it tight by weights hung from the ends. Next, suspend within the shaft, as far apart along the line of the road as the opening will allow, two heavy plumbs, carefully turned, and attached to strong wires long enough to reach to the bottom, the upper ends being so arranged that the plumb-lines may be moved into exact contact with the horizontal wire stretched between the notches.

At the bottom of the shaft place two stiff and well-seasoned bars of wood across the tunnel, at a distance apart of 50 or 60 ft., and 3 or 4 ft. above the ground, adjusted at the ends into metal fixtures let into the side walls, so that the bars may be removed and accurately replaced at pleasure.

Let a metal slide with a V-shaped notch be attached to each of the bars, with a clamp for fixing it to the same when in the proper position. Stretch a fine wire across these two lower notches, and move the slides until they come correctly into the direction of the plumb-lines, and fasten them. The two lower notches will then be upon the centre line of the road, which may be produced in either direction by means of a transit and illuminated rods, such as mining engineers use.

When the line has been fixed, the cross-bars may be removed for safe keeping until again required. Another method of adjusting the upper ends of the plumb-lines is shown in Fig. 6447, where A A is one of the cross-sills at the edge of the shaft, B B an iron plate fastened to the sill, and C a thin piece of metal may be moved sideways, in order to bring a V notch in its upper edge into the centre line. The notch being correctly fixed, the plumb-line E may be passed through it, and the direction at the foot of the shaft obtained as before. The plumbs should be suspended in a vessel of water, in order to check the vibrations; and every care should be taken to keep the wires from being jarred during the operation. When the tunnel is upon a curve the line may be laid off from a tangent established as above. Levels may be transferred from the top to the bottom of the shaft by a series of wires, fastened together like a surveyor's chain, the links being 8 or 10 ft. long, the whole length having been correctly ascertained.

6447.

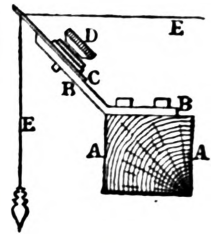

Surveying and Levelling the Line.—The surveys and levels required for preparing the contract plans for a line of railway, do not differ in any material point from those necessary for other purposes. The method of executing them is described in Surveying and Levelling. The peculiarity of the survey for a railway is with the length. If the survey be made after the staking out of the line, the surveyor has the advantage of possessing an accurately-measured base line, and his operations are confined to connecting his triangles, which are seldom of any magnitude, with this base line. A distance of about 400 ft. on each side of the centre line will be found sufficient for the lateral extent of the survey. Particular attention should be paid to all boundaries, both public and private, and to those points at which the railway crosses under or over a road, river, or another line.

Cuttings and Embankments.—The earthworks of a railway comprise the cuttings from which earth has been excavated, and the embankments which have been formed by raising material on the natural surface. So far as is possible the engineer endeavours to place his cuttings and embankments so that the soil excavated from the one shall be used up, and shall be sufficient for the other; in which case the labour expended on the earthworks is applied in redistributing the material along the line. If the volume of the embankment is in excess, it becomes necessary to seek materials in side cuttings, or, if the cuttings are in excess, to form spoil banks, both of which being useless for purposes of the railway, involve a waste of labour, and sometimes of land. The cuttings and embankments must also, as far as possible, be so alternated that the earth from the former can be deposited in the latter without necessitating its transport to excessive distances. Yet again, in effecting the distribution of the earth derived from the cuttings to the embankments, the engineer must endeavour to render the labour of transport a minimum, both by depositing the earth from the cutting on the nearest accessible portion of embankment, and by avoiding the crossing of the routes by which the earth is led to the bank.

To secure the permanent stability of the superstructure, the earthworks must be carefully considered with reference to materials, form, and drainage. They should be of stable material, of liberal width, of easy slopes, and ample drainage.

The width required for a railway consists of the width of gauge, the widths of the rail-heads, and the side spaces. For a double line of way, also the middle space, or 6 ft.

The width outside the rails, or width of side spaces, is usually 4 to 5 ft., and that of the middle space between two lines of way, 5 ft. 6 in. to 6 ft. 6 in.

Hence for the whole width necessary for a railway, we get;—

Single Line of Way.	European Narrow-gauge.		Indian.
	From	To	
	ft. in.	ft. in.	ft. in.
Gauge	4 $8\frac{1}{2}$	4 $8\frac{1}{2}$	5 6
Two rail-heads ..	0 5	0 5	0 5
Two side spaces ..	7 $1\frac{1}{2}$	9 $10\frac{1}{2}$	8 0
Width of ballast ..	12 3	15 0	13 11

Double Line of Way.	European Narrow-gauge.		Indian.
	From	To	
	ft. in.	ft. in.	ft. in.
Two widths of gauge ..	9 5	9 5	11 0
Four rail-heads	0 10	0 10	0 10
Middle space	5 6	6 6	6 0
Two side spaces	7 3	10 3	8 0
Width of ballast ..	23 0	27 0	25 10

In addition to the width necessary for ballast, there is ordinarily left on each side of the ballast a horizontal bench, which increases the total width required on earthworks by 2 or 3 ft. in cuttings, and 4 or 5 ft. on embankments. In cuttings, a further width is required for side drains, which may be 1 ft. or 18 in. wide at bottom, with slope of 1 to 1.

6448.

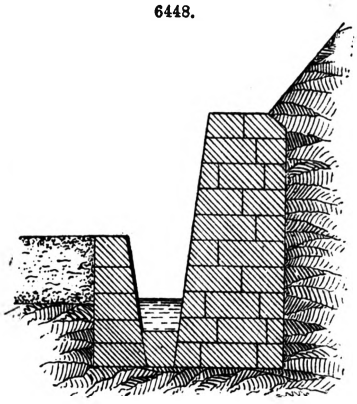

It is advisable to form a small bench between the drain and the face of the cutting, to catch falling débris and prevent its clogging the ditch. But, on the other hand, if the cutting is a deep one and it is desirable to economize labour in cutting or land, the width at formation level may be reduced by building a dwarf wall as in Fig. 6448, which supports the ballast on one side and the toe of the slope on the other.

Cross-section of the Line.—Composed as earthworks generally are, of comparatively impermeable materials, their surface is altogether unsuitable for the direct support of the permanent way. To bed the sleepers properly there must be provided a material of great frictional stability, of considerable hardness and compressive strength, easily permeable by water, and capable of resisting disintegration, either by water or frost. For this purpose a layer of broken stone, or gravel, is most suitable, or, if nothing better is obtainable, a layer of clean sand or burnt brick clay. The form given to this layer of ballast varies in different circumstances. Generally, in England and France, it is simply laid on the surface of the earthworks, which have been dressed to a convex surface to throw off the water, and a bench is left on each side, Fig. 6449. Sometimes, on German lines, the ballast covers the entire width of embankments at formation level, Fig. 6450. More generally, on Swiss and German lines, the ballast is economized by being laid in a trench, Fig. 6451. As ballast is often an expensive item in the cost of construction of a line, the economy in this respect is important. This last method of laying the line also permits some reduction of the total width of the line at formation level. But, on the other hand, the cross-drains require to be numerous, say about 9 to 12 ft. apart, and it is doubtful whether even in that case the drainage is quite as effectual as on the English system.

6449.

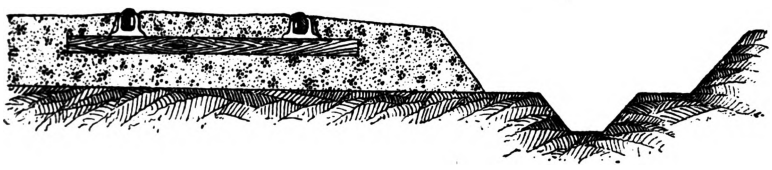

6450.

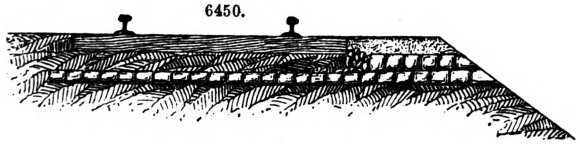

6451.

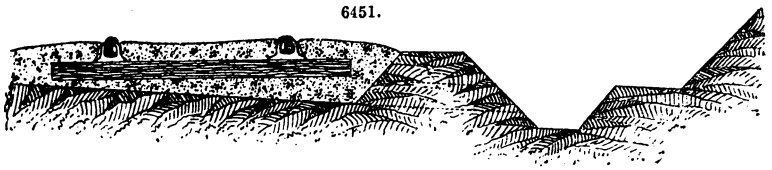

The ballast is laid in two layers; the lower layer, on which the stability of the superstructure depends, should have a thickness of 9 to 12 in. for broken stone or gravel, if on a tolerably permeable substratum, and of 12 to 18 in. if the substratum is humid. If the ballast is sand, a depth of 18 in. to 24 in. will be required for the lower layer. The upper layer of the ballast, or boxing, used for packing round the sleepers should have a thickness of 6 to 9 in., and its quality is not of quite so great importance as that of the lower layer.

The cross-section in Fig. 6451 is used in Russia with sand ballast, and in Switzerland with broken stone ballast. The quantity of ballast required, after deducting space occupied by sleepers, is about 65 cub. ft. a yard for the cross-section, Fig. 6449, and 41 cub. ft. a yard for that shown in Fig. 6451.

The older method of prosecuting cuttings was to work forwards on the whole face of the cutting, which was profiled to the required slopes as it proceeded. This method is, however, too slow for extensive railway cuttings, and the plan generally adopted is to run a gullet, or vertical-sided trench, through the cutting by working at the face, and then to work sideways from the gullet, widening the trench in successive benches. The benches are about 8 ft. apart vertically.

Embankments are executed in two ways, either by spreading over the whole area of the embankment successive horizontal layers, or by raising the embankment at once to the required height at one end, and carrying it forwards by tipping material over the advancing extremity. When constructed in thin horizontal layers the material is consolidated as the work proceeds,

by the passage of the barrows or carts, and also by atmospheric agencies. A much more complete consolidation of the material is secured than by the other method, and hence, this mode of construction is invariably adopted for reservoir embankments. This method, however, is too slow and too costly to be generally used on railways, except for filling in behind retaining walls and abutments.

When an embankment is carried forward from one end, the earth may be tipped directly over the end so as to fall in a series of thin layers all inclined at the angle of repose; or a bridge of discharge may be formed at the end of the embankment from which the earth wagons deposit the soil, and which is carried forward from time to time as the successive layers reach the height of the embankment. By this latter method greater solidity in the bank is secured, and the ultimate settlement is less. But it is only economically applicable to very large embankments, and is less often used than the simpler method. Occasionally embankments have been raised to only half their full height at first, and when this portion has settled, a second portion has been carried forwards over the first, completing the bank.

On sidelong ground, the seat of an embankment requires to be carefully cut in steps, or benches, that the soil of the bank may be bonded into that on which it rests, and that water may not percolate between the old surface and the earthwork raised on it, Fig. 6452. The destruction of

6452.

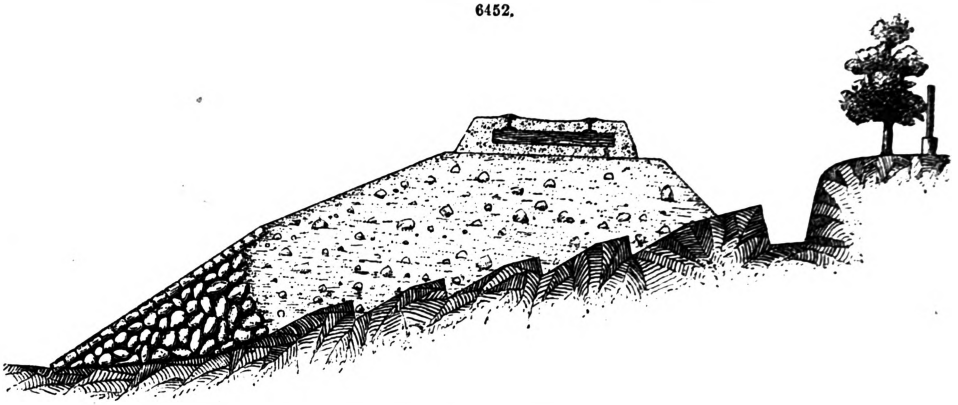

several embankments has been due to neglect of this precaution. For the same reason, the turf and vegetable débris should be carefully removed from the seat of the embankment, before its construction is commenced.

During the construction of the bank the settlement should be carefully studied, and in order to prevent the serious evil of having to patch the slopes, the height and width of the bank should be made rather greater than will ultimately be required, so that the surfaces may be trimmed down to their proper dimensions, after a great part of the settlement has already been accomplished. The amount of settlement varies in different cases, from $\frac{1}{12}$ to $\frac{1}{6}$ of the total height. The ultimate settlement of embankments of gravel or chalk does not require more than two or three years, but clay embankments may, in some cases, continue to shrink for ten years.

It has already been pointed out that when the seat of a bank is compressible, or of feeble stability, the bank constructed upon it will not stand at its natural angle of slope, however good the materials of which it is composed. When an engineer has to carry an embankment over marshy ground his first object must be to consolidate the foundation of his bank, as much as possible, by drainage. For that purpose large open drains, parallel to the axis of the line, may be first excavated. Sometimes he may be able to remove the compressible foundation and replace it by better materials. At others, he may consolidate it by fascines, or by piles. Sometimes he may use for his embankment very light materials, as, for instance, was done at Chat Moss, where, after first covering the yielding surface with hurdles, the bank was formed of dry peat. Again, large open pits may be formed and filled with compact clay.

Fig. 6453 shows one of many embankments on marshy ground on the 3 ft. 6 in. gauge railways

6453.

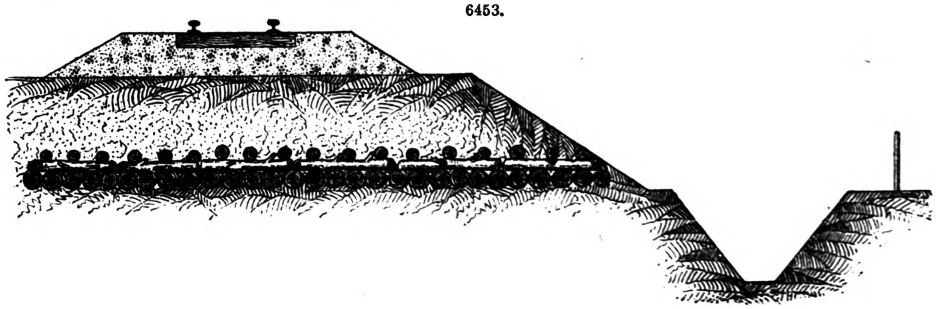

of Norway. In this case the subsoil has first been dried by large side drains; then on the seat of the bank fir-tree trunks have been spread lengthwise and crosswise, and over them the smaller

branches of the fir trees. Finally, the embankment has been carried forward over the consolidated foundation thus prepared.

Near important works of construction the earthworks should be made with great care, and of the best and most permeable materials. The backs of arches should be well punned with earth, before earth is tipped over them.

When a cutting exceeds 40 ft. in depth, it is advisable to form a bench 6 ft. in width at about two-thirds the height. This receives the surface water from the higher lands, which may be conveyed to the side drains at the bottom of the slopes by earthen pipes, wooden trunks, or stone drains, Fig. 6458.

To permit the flow of surface water the formation level should be dressed in slopes of 1 in 35, from the centre line towards the sides. If this is not done the top of the bank is apt to become concave, and to retain the rainfall in the ballast.

Fig. 6452 shows an embankment on sidelong ground, constructed of earth, of doubtful stability, the toe of which is formed of loose broken stone as a security against slipping.

Cuttings are sometimes 100 ft. deep, and embankments rise occasionally to an almost equal elevation. The Tring cutting of the London and Birmingham Railway averages 40, and is at parts 60 ft. deep. The New Cross cutting of the South-Eastern Railway is, at parts, 75 and 80 ft. deep; the Wynchborough cutting on the Edinburgh and Glasgow, though solid rock, varies from 25 to 60 ft. in depth, and is 4 miles in length. It is succeeded by an embankment 1½ mile long and 60 ft. high. The Olive Mount cutting of the Liverpool and Manchester Railway is 2 miles long and at parts 100 ft. deep; and on the Newcastle and Carlisle there is a cutting 110 ft. in depth; but when the depth exceeds 60 ft. it is generally more economical to tunnel.

Drainage of Cuttings.—In all cases it is desirable to establish at the top of the slope of a cutting, on the side towards which the surface waters flow, a drain with an alternate rise and fall of about 1 in 100, communicating at its lowest points, by means of open drains, or earthen pipes, with the side drains at the bottom of the cutting, Fig. 6454; and care must be taken to prevent, by puddling or otherwise, the infiltration of the water from the drain at the top of the slope, into the soil forming the side of the cutting.

6454.

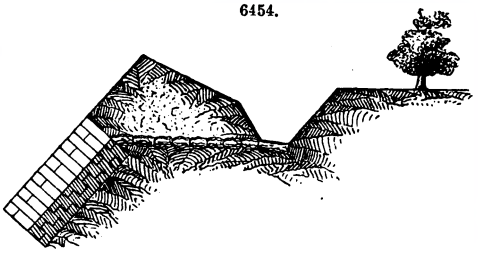

Figs. 6455, 6456, show another method of

6455.

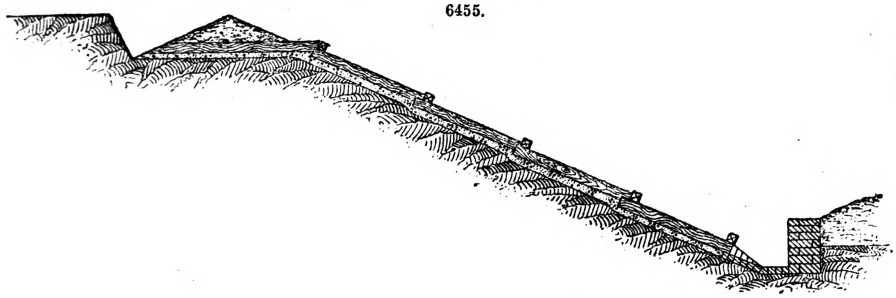

effecting the protection of the slopes from the flow of surface water. A water-course is formed at the top of the slopes, and from this open drains, formed of planks bedded in hydraulic mortar, conduct the surface waters to the side drains at the foot of the slopes. The wooden trunks are simply nailed together in 6-ft. lengths, and the bed of mortar is about 3 in. thick. The ditch at the bottom of the slope is roughly pitched with dry stone.

6456.

When a cutting is opened through clay or other soil liable to become slippery when wet, it is especially necessary to protect the surface of the slopes from cracking under the drying influence of the sun and wind, and then receiving through the sun-cracks surface water, which destroys their stability. For this purpose they must be covered with a coating more permeable and more stable than themselves, and suitable for vegetation. This coating may be 10 or 12 in. thick, and in order that it may be bonded into the slopes, they should be cut in benches of about 6 in. deep, with an inclination longitudinally of about 1 in 7. The coating should be spread in layers and well rammed, Figs. 6457, 6458.

The foot of the slope wetted by the waters of the side drains should, in this case, be protected by dry stone pitching, or with a brick drain, Fig. 6459.

The worst cases with which the engineer has to deal are those in which the cutting intersects strata alternately permeable and impermeable; where, for instance, a permeable layer is found between strata of clay; and the danger in this case is increased if on either side the strata dip towards the cutting. In such a case there may be at times a considerable flow of water from the permeable stratum, which if not drained off may destroy the stability of the mass. Or there may be land springs at various points, which if undetected when the cutting is in course of construction, can only be discovered with great difficulty afterwards, and remain a permanent but hidden source

of danger. The engineer must therefore watch carefully during the excavation for evidences of permeable or water-bearing strata or springs; it will be of service to take note of the appearance of

6157.

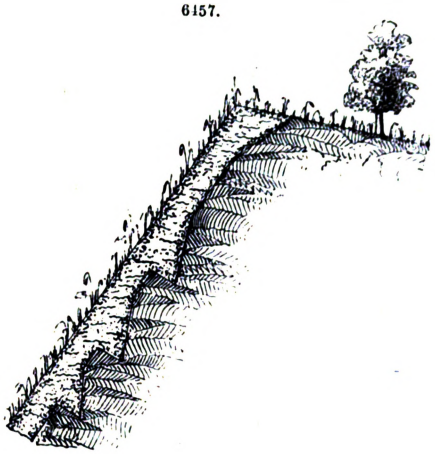

6158.

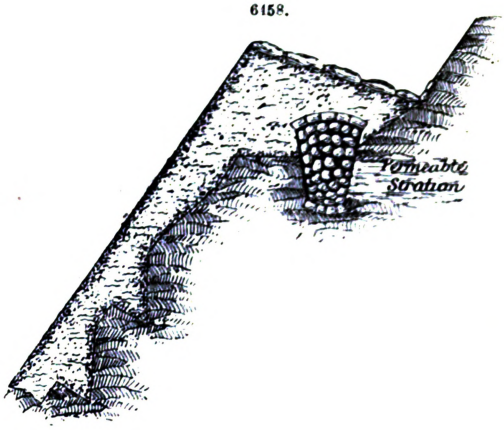

6459.

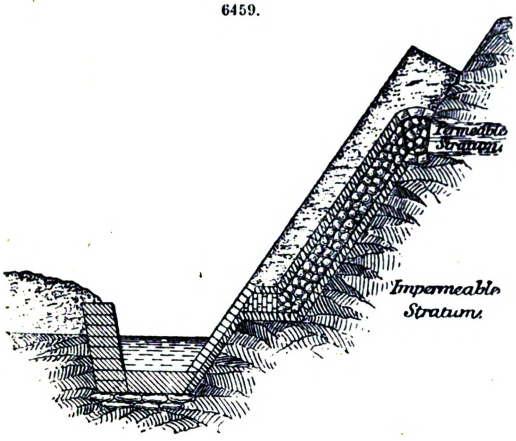

6459.*

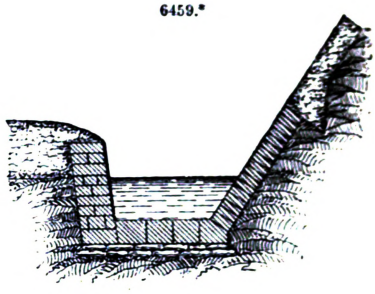

the soil at sunrise, or even to sprinkle dry sand over strata suspected of containing springs, the more readily to detect the humidity. Further, when once springs have been detected in any well-marked stratum, it may be concluded that similar springs may, in wet seasons, be found wherever that stratum is found. In those cases the object to be attained is to drain off as rapidly as possible the waters of the permeable stratum, and prevent their flowing over the surface of the slopes or filtering into the less permeable and more slippery strata. When such a stratum has been discovered a longitudinal drain must be formed, Fig. 6458, along its line of outcrop, with rise and fall alternately of 1 in 100. The bottom of the drain may be formed of bricks or stones set in cement, the drain may then be filled with broken stone or clean gravel, and covered with reversed turf, flags, or tiles, to prevent the penetration of soil. A foot in width at the bottom of the drain will generally suffice, the sides rising with a batter of 1 in 7. The low points of this longitudinal drain must be connected by transverse drains, Fig. 6459, with the side drains at the foot of the slopes. The slope may then be protected by a coating of permeable soil, as already described. Sometimes it is desirable to drain the whole surface of a slippery slope with small drain-pipes carried horizontally at distances of about 15 ft. apart, with alternate rise and fall, and connected at their low points with pipes running down the slope to the side drains.

The drain-pipes should be buried to a moderate depth, and the open cuttings in which they are laid may be filled with broken stone and covered with earth.

Drainage of Embankments.—To secure the permanent stability of embankments similar precautions must be taken to prevent the percolation of water, as in the case of cuttings. At the foot of the slope on the higher side towards which the surface waters flow, a water-course or drain should be constructed, to convey the water away from the seat of the bank, Figs. 6460, 6461. In the construction of embankments the engineer will reject, if necessary, soil of bad quality obtained from cuttings, and supply its place by more stable material obtained by side cutting. Sometimes, in spite of precautions, the embankments slip during or after construction. Such slips may arise either from the deficient stability of the foundation on which the embankment is placed, or from the use of defective material in the construction of the bank, or from the flow of water over the *talus*. The precautions to be taken on marshy unstable ground have already been mentioned. If, in spite of precautions, an embankment slips during construction, the whole of the slipped earth must be

removed, and the bank again filled up with the same or better materials, carefully rammed in horizontal layers.

6460.

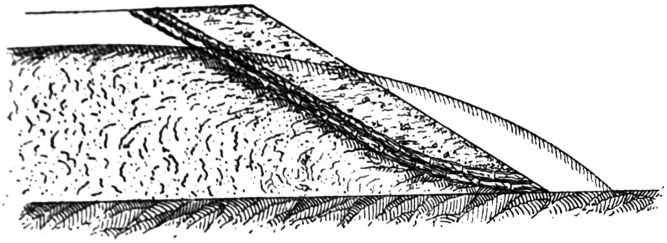

6461.

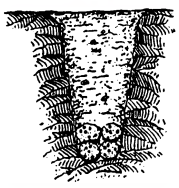

Fig. 6462 is a section of part of the embankment of Pourtieres repaired after a slip. The materials of the slip were first removed and then relaid in horizontal layers. But in doing so drains were formed of fascines filled with gravel, to dry the materials of the bank. Similar drains were formed in the part of the bank which had not given way, to prevent a repetition of the disaster. At the embankment of Morcerf it was found necessary to construct a longitudinal filter, or drain, of broken stone, surrounded by matting, to prevent the penetration of earth. In some parts of the embankment two of these drains were formed, communicating with each other. The slipped part of the bank was attached by successive cuttings, carried at right angles to the line as far as the position of the original foot of the slope; then a trench was opened parallel to the line of way, in which drain-pipes were placed, covered by a filter of broken stone, enclosed in matting. Finally, there was constructed at the foot of the slope a cavalier of good soil, built up in horizontal layers, well rammed, Fig. 6461. When it is impossible to remove the slipped portion of a bank which has given way, a new bank must be formed over the slipped portion of sand or gravel, and especial care must be taken that its drainage is complete, and maintained in working order. If the drains should be injured by subsequent settlement, new drains should be at once formed.

6462.

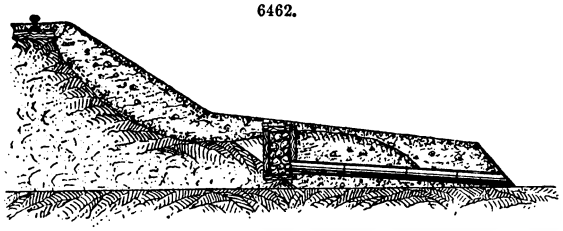

If embankments are liable to be washed by inundation waters or otherwise, it will be of the utmost importance to construct them of materials the stability of which is little changed by humidity. Further, they should be carefully turfed, and for some distance above and below the level which the waters are likely to attain they should be protected from erosion by a pitching of stone. Usually the best protection from atmospheric degradation of the slopes of cuttings and embankments, is afforded by covering them with a layer of vegetable earth, to a depth of 6 or 8 in., and sowing them with grass, clover, or lucerne. When the slope is wanting in stability, couch-grass has sometimes been employed, the advantage being that its roots penetrate to a depth of 2 or 3 ft. On friable soils of chalk or sand, and especially on steep declivities, neither the sowing of herbaceous plants nor turfing succeeds, because of the surface. Then recourse must be had to the sowing or planting out of ligneous plants, the roots of which penetrate more deeply, such plants being chosen as are found to thrive on mountains. Of these, those principally employed on the Continent are the juniper, berberry, sea buckthorn, saintfoin and lucerne, acacia, ash, willow, birch, and maple. The conifers are prejudicial, from the blowing of their leaves upon the rails, causing slipping of the wheels of the locomotives.

Calculating Contents of Cuttings and Embankments.—Under the article Embankments will be found several methods for effecting these calculations. There are numerous tables for facilitating them, by Bidder, Macneil, Bashforth, Barlow, and other engineers. Putting H and H_1 for the two heights of the cutting, R for the ratio of the slopes, and L for the length, we have by the prismoidal formula for C the contents in cubic feet, $C = L\left\{\frac{B(H+H_1)}{2} + \frac{R}{3}(H^2 + H_1^2 + H H_1)\right\}$. As C is usually required in cubic yards, and L in feet, we have

$$C = L\left\{\frac{B(H+H_1)}{54} + \frac{R}{81}(H^2 + H_1^2 + H H_1)\right\}.$$

There are two approximate methods of ascertaining the contents of a prismoidal block. The first is the method of mean heights, by taking it as if the section in the middle were the average section; and the second, or method of mean areas, by taking half the sum of the end areas to be the average section. The errors belonging to each of these methods are seen at once, by comparing the content as given by it with the true quantity. The method of mean heights gives a content of $L\left\{B\frac{H+H'}{2} + \left\{\frac{H+H'}{2}\right\}^2 R\right\}$, and an error of $\left(-\frac{(H-H')^2}{12}\right)L$. The method of mean areas gives a content of $L\left\{B\frac{H+H'}{2} + \frac{(H^2+H'_2)}{2}R\right\}$ and an error of $\left(+\frac{(H-H')^2}{6}\right)L$. So that one method gives an error in excess, the other an error on the other side, and one error is double the amount of the other.

There is another way of expressing the true content, it is;—to the sum of the end areas add four times the middle area, and multiply the sum by one-sixth of the length. In cuttings it will constantly occur that the contents are not all rock or all clay, but will be partly rock and partly clay. In this case the rock can be taken out as above, and the clay taken out in blocks the same way as before, with this exception, that each block will have a different base. The base of each block of clay cutting must be taken as a mean of the bases at each end, or, what is the same thing, a mean of the widths of the top of the rock cutting at those points. This method of getting the quantity of the clay is not strictly accurate; the true content of a block of this kind is given by this formula, $Q = L\left(\frac{B\,(2\,H + H') + B'\,(2\,H' + H)}{6} + \frac{R}{3}(H'^2 + H\,H')\right)$, where B is the base of the clay at the end at which H is the height, and B′ the base, and H′ the height at the other.

The error introduced by the approximative method is $+\frac{(B - B')\,(H - H')}{12}\,L$. It is to be remarked that this error is to some extent compensating, sometimes being in excess and sometimes the other way. The approximative method gives too much, if at the same time $B > B'$ and $H > H'$, and too little if $B > B'$ and $H < H'$.

Cases will occur when none of the rules above given apply, namely, when the ground is so uneven as to require cross-sections. The best thing to be done in this case is to take the mean of the two areas of the two cross-sections and multiply it by the length between them, and reduce to yards.

In those instances in which heavy cuttings occur without any corresponding embankments in which to dispose of the material, it will be found economical to employ dwarf walls. There will be a particular height of cutting at which the cost of the walls is equivalent to the cost of the excavation avoided, which may be thus found. Let H be the height of the cutting, B the base of the cutting, R the ratio of the slopes, H_1 the height of the walls, B_1 the width between the walls, P the price a cube yard of excavation, and P_1 the price a yard run of the dwarf wall. Then we have $(H - H_1)\,2\,R\,H_1 + R\,H_1^2 + H\,(B - B_1) = \frac{18\,P_1}{P}$; from which we deduce $H = \frac{18\,P_1 + R\,H_1^2\,P}{P\,(2\,R\,H_1 + B - B_1)}$. When the height of the excavation exceeds H, it is more economical to introduce dwarf walls. These are usually built plumb on the back and face. When they are about a certain height, they are battered on the face, and then become retaining walls in the strict sense of the term. On the above calculation the walls are supposed to be perpendicular on the face, and if they should be battered, the difference with respect to the excavation is too trifling to deserve notice. Whenever the material of the cutting is clay, and has to be run to spoil, the walls should always be substituted so soon as the limiting height of excavation is reached.

Borings, and Soiling Slopes.—At certain distances along the line borings should always be made to ascertain what amount of rock may be fairly expected, and the section should show a line of demarcation between the earth and the rock. Borings require to be made very carefully, as the ground is exceedingly deceptive, and any subsequent rectification is a fruitful source of dispute between companies and contractors.

It frequently happens during the progress of the works of a line of railway in which the cuttings and embankments are of considerable magnitude, that due precaution is not taken to reserve in their vicinity a sufficient amount of material for soiling or top-dressing the slopes, and the consequence is, that either they are not covered with the proper quantity, or the contractor is obliged to bring the soil from some distance along the line, or procure it elsewhere at more than the ordinary expense. The quantity requisite for the different cuttings and embankments depends principally on the depths and heights, and varies also as the ground is more or less sidelong. The simplest case which can occur is when the height is constant for a given length of the longitudinal section of the line, and when the cross-sections also for that distance are level. This is shown in Fig. 6463, which represents one of the slopes of either a cutting or embankment, the other being supposed to be precisely similar. As the soil is always of a uniform depth, its quantity is taken out in superficial yards. In Fig. 6463 let A B or C D = L = the length on the longitudinal section, let h = the height constant for the length L, and let S be the number of superficial yards of soil required for both slopes, all other dimensions being in feet; then $S = \frac{2 \text{ area of } A\,B\,C\,D}{9}$; but, from the figure, area of A B C D = A C × L, and $S = \frac{2\,A\,C \times L}{9}$. A C is the length of the slope, and is unknown, but supposing b to be constant, as it always is in practice, A C depends on h. Now by construction $A\,C^2 = h^2 + b^2$, and substituting for b its value R × h, R being ratio of slope,

6463.

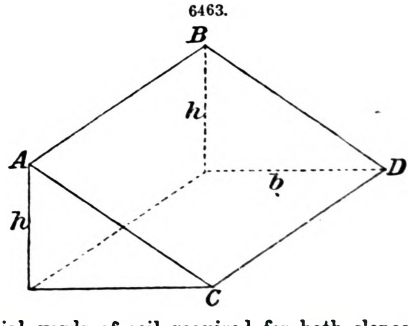

$$A\,C^2 = h^2 + R^2\,h^2 = h^2\,(1 + R^2) \text{ and } A\,C = h\sqrt{(1 + R^2)}.$$

Putting this value of A C in the equation for S, we obtain $S = \frac{2\,h\sqrt{(1 + R^2)} \times L}{9}$. R is almost universally = $\frac{3}{2}$ and $\sqrt{(1 + R^2)} = \frac{\sqrt{13}}{2}$, which gives us by substitution in the above equation

$S = \frac{2h \times L}{9} \times \frac{\sqrt{13}}{2}$. Multiplying out and reducing we obtain $S = h \times L \times 0{\cdot}4$, which is a general formula applicable to any height and distance. If we make L = 1 chain = 100 ft., the formula becomes very simple, for $S = 40h$; if L = the statute chain = 66 ft., $S = 26{\cdot}4\ h$.

Another case which is more frequently met with, and the solution of which is of greater practical utility, is when the heights at the two ends of the given length of the longitudinal section are unequal, as is represented in Fig. 6464; h and h' are the two heights, and the remainder of the notation is the same as that employed above.

6464.

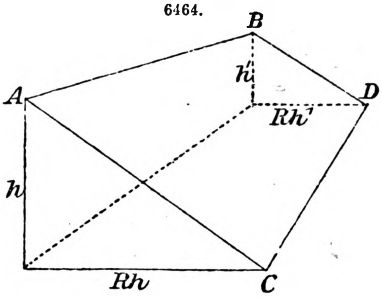

As before $S = \frac{2 \text{ area of A B C D}}{9}$; area of A B C D = $L \times \left(\frac{A C + B D}{2}\right)$. From above $A C = h\sqrt{(1 + R^2)}$, and by similar reasoning $B D = h'\sqrt{(1 + R^2)}$; therefore area of $A B C D = \frac{L}{2} \times \{h\sqrt{(1 + R^2)} + h'\sqrt{(1 - R^2)}\}$, which gives us $S = \frac{L}{9}\{(h + h')\sqrt{(1 + R^2)}\}$. Substituting for the expression $\sqrt{(1 + R^2)}$ its equivalent $\frac{\sqrt{13}}{2}$ and reducing, we obtain finally $S = L(h + h') \times 0{\cdot}2$; if L = 100 ft., then $S = (h + h') \times 20$; if L = 66 ft., then $S = (h + h')\ 13{\cdot}2$.

It is evident that by making $h = h'$, the first three equations became identical with the last three, but a separate proof and demonstration is given, not only to preserve uniformity in the different examples under investigation, but because it may serve to render the subject clearer to many persons, especially those perusing it for the first time. These equations will be found particularly useful to those engaged in making the estimates for contract work of a line of railway, as the ground may generally be considered level between any two ordinates on the longitudinal section, which are at the distance of one chain from one another; unless it is exceedingly rough and irregular, and even then any deficiency or excess in so inexpensive an item as trimming and soiling slopes is not of much consequence.

All the foregoing formulæ have been calculated on the supposition that the cross-sections of the ground are level, or, in other words, that the quantity of soil required for one slope is the same as that which is required for the other.

It is manifest that, in sidelong ground, this would not be the case, and in some instances, where the difference of the heights on the two sides is great, it might be necessary to allow for it in taking out the quantity. This might be accomplished in two ways, either by applying any of the above equations, which suit the particular case in question, to each respective side of the cutting or embankment, and dividing the result by 2; or by making use of the following formula. Let H, H', h, h', be the four different heights, then from Fig. 6464 and the equations the number of superficial yards of one slope = $L(h + h') \times 0{\cdot}1$, and of the other = $L(H + H')0{\cdot}1$, and total number $S = L(H + H' + h + h')0{\cdot}1$, which can be simplified in a corresponding manner for the different values of L = 100 or 66 ft.

In any instance in which the sidelong ground continued to slope uniformly in the same direction across the line for a considerable distance, it might be found quite as advantageous, if not more so, to take out each side of the line separately, and to employ the former instead of the latter method.

In the preliminary estimates of a line of railway for parliamentary purposes, trimming and soiling slopes is so insignificant an item that it is hardly ever taken into account; but in a case where the cuttings and embankments were excessive both in number and magnitude, and where a close and vigorous opposition would render an equally close and accurate estimate requisite, it would be prudent to ascertain its amount either by direct calculation, or allow a sum for it, suggested by experience. In such calculations, it would be convenient to take out a whole cutting or embankment at one operation; and quite sufficiently accurate to consider the cross-sections of the ground level, and consequently the area of the two slopes equal to one another.

The following formula is general for any length L and number of heights $h, h_1\ h_2\ h_3 \ldots h_n$, which for simplicity's sake may be taken at equal distances; let x = number of heights taken, then $S = \frac{L}{x - 1}(h + 2h_1 + 2h_2 + 2h_3 + \ldots + h_n)0{\cdot}2$. If L be taken an even number of hundred feet, as it may be in such examples, and let N = number of 100-ft. lengths, and allowing one penny a superficial yard, we obtain, by putting M for the amount in pounds,

$$M = \frac{N}{12(x - 1)}(h + 2h_1 + 2h_2 + 2h_3 + \ldots + h_n).$$

It will be at once seen, that when the length admits of it, this substitution can be applied to all the other formulæ, and the price therefore obtained at once from the values of the lengths and heights or depths.

Masonry, Brickwork, and Ironwork.—In those lines in which timber is not employed as a constructive material, the permanent structures are built of one of the three enumerated, or of a combination of them. Where stone can be procured in the neighbourhood of a good quality, suitable for the purpose, its use is only limited by the considerations of time, and the possibility of employing the

arch form instead of the horizontal in bridges and viaducts. Having once determined the description of material to be used in the building of the permanent works on the line, the next step is to consider the structures themselves.

Bridges.—Every information on these structures will be found in article Bridges, and we shall therefore confine ourselves to noticing a few points in them most intimately connected with our subject. Bridges are divided into two principal classes—bridges on the square, and bridges on the skew. See OBLIQUE ARCH. Bridges on the skew are rarely built now of masonry or brickwork. The time consumed in cutting the stones to the proper twist and other considerations have virtually put an end to the construction of stone skew bridges, even when the material is at hand. Skew bridges are sometimes built with stone abutments and the arch turned in brick; when neatly done the structure looks very well. Unless the span is of very considerable dimensions the building of a bridge on the square is a very simple matter, provided the foundations are good and proper supervision exercised over the materials and workmanship. The consideration of headway generally leads to the adoption of iron bridges, even where stone is plentiful. In the case of over-bridges the reduction of the heights may be of great importance as reducing the quantity of the embankment, or shortening the length of the approach. In under-bridges it may be of still greater importance, allowing a reduction in the height of an embankment, which should perhaps have to be made from side cutting. Iron bridges may also be adopted for another reason, on account of any insecurity in the foundations that would render some slight settlement in the abutments probable. An arch might be seriously damaged by a settlement that would in no way affect an iron superstructure.

In designing a bridge all the parts of the drawing must be carried on together; neither plan nor elevation can be finished by themselves without having the sections drawn, or as vividly impressed on the mind as if they were drawn.

The footings in over-bridges should be at least 1 ft. below formation level, to enable the water-tables or side drains of the railway to be carried continuously through the bridge. The projection of a footing depends on the material employed; every front stone in a footing course should be at least as much imbedded in the work as it is exposed, else the footings lose their value, which is to spread the pressure; hence the projection mentioned above may be increased, or must be diminished, according to circumstances. If a greater width of foundation is thought necessary, it must be gained by increasing the number of the footings, and not their width.

The height of abutment, span, and rise of arch are known quantities. The radius of the circle of which the arch is a segment is given by the equation $R = \frac{r^2 + s^2}{2r}$, where R = radius, r the rise, and s the semi-span of the arch. In segmental arches of moderate span, the extrados is struck from the same centre as the intrados. The thicknesses of the arch and of the abutments are subjects of theoretical investigations, but practically depend on previous examples. It is possible to determine the width of an abutment that will just keep the arch in equilibrium, but this has to be modified by a coefficient of safety, in itself very variable, so that the value of the theoretical rule is practically lost. The haunching is usually carried up at the back in a plumb-line with the abutment, terminating at a point 1 ft. or more, below the soffit of the crown of the arch, and raked from that in a line tangent to the extrados, to allow water to run freely off. Steps are sometimes introduced to lighten the haunching.

The counterforts are built at the back of the abutments, and are usually plumb at the back. Sometimes they are raked off in a line with the haunching, and sometimes are stopped lower down. Their object is to help the abutment to withstand the thrust of the arch. There is no use in founding counterforts as low as the abutments when the bridge is in cutting, they should go down to a good foundation for themselves. They may or may not have footings. The puddle is usually shown 6 in. deep, and should extend over the counterforts. Asphalte is often used instead of clay puddle.

Iron bridges are either of cast or of wrought iron, the former being now confined to the cases of carrying roads over railways, where it is an object to save the height of the approaches, or for other reasons.

Wrought-iron bridges to carry the railway over roads are of two kinds, one where the railway is supported by under-girders, one under each rail, or by side and cross girders. The latter, if for double line, are of two kinds, firstly, with two side girders, with at least 25 ft. 6 in. clear space between them and carrying both roads, or a set of three girders, with a single road between each pair.

These girders, in ordinary cases, are either lattice or plate girders, and may be in each case either single or box girders. The names explain their nature. For rules for finding the strength of each different part of a lattice or plate girder, see article Materials of Construction, Strength of.

On the plan of every bridge should be shown at least three views, one of the superstructure complete, one of the bridge, or part of it, with the parapets, string-course, coping of wings, and newel-caps removed, and a third of the foundations. In designing iron bridges the various parts should as much as possible be duplicates of each other, so as to diminish to a minimum the number of templets required. It must be kept in view that all structures consist of two items, materials and workmanship, and it is quite possible to make the latter so expensive as to double the cost. All bending, cranking, forging, and welding of iron should be avoided, especially when the pieces are of large dimensions. It adds little or nothing to the contract price to bend a piece of angle iron 4 or 5 ft. in length, but when that length is increased to 15 or 16 ft. the contractor will at once require an extra price for workmanship. As an example may be quoted the case of an ordinary lattice bridge, in which the flanges are horizontal and all the bars in the web of the same length, and a bowstring girder in which the upper flange is bent, and all the bars in the web of a different size. The difference in the contract price of these two examples of bridge girders will reach to 30*s.* more a ton. It is not to be argued from this that bowstring girders are not to be used, but that they

are to be used only when the circumstances of the case justify the additional expenditure. In large spans the bowstring girder is an economical type of railway bridge.

Tunnelling.—The greatest intensity of pressure in a buried archway occurs usually in its sides, at the ends of the shorter diameter of the oval intrados; and that intensity is given approximately by the following equation.

Let x_1 be the depth of the shorter diameter below the surface of the ground, b' the half-span of the archway, a' its rise, t the thickness of its side, w the weight of a cubic foot of the earth; then the greatest pressure, in lbs. on the square foot, is $q = \frac{w\{x_1(b'+t) - 0{\cdot}8\,a'\,b'\}}{t}$; and this should not exceed the resistance of the material to crushing, divided by a proper factor of safety.

It appears that in the brickwork of various existing tunnels the factor of safety is as low as four. This is sufficient because of the steadiness of the load, but in buried archways exposed to shocks, like those of culverts under high embankments, the factor of safety should be greater, say from eight to ten.

How small soever the load may be, there is a certain minimum thickness for an underground archway, for determining which the following empirical rule, exactly similar to that for finding the depth of the keystone of an arch, has been deduced from practical examples. The rise and half-span being denoted as before by a' and b', compute approximately the longest radius of curvature of the intrados by the formula $r = \frac{a'^2}{b'}$; then least thickness t in feet $= \sqrt{0{\cdot}12\,r}$.

This is applicable where the ground is of the finest and safest kind. In soft and slippery materials the thickness ranges from one and a half to double that given by the equation; that is to say, from $\sqrt{0{\cdot}27\,r}$ to $\sqrt{0{\cdot}48\,r}$. The thickness of an underground arch at the crown may be made less than at the sides in the ratio $b'\,a'$; but the more common practice is to make it uniform.

Tunnels are driven through hills and spurs of mountains to avoid very deep cutting. At the best they are sources of large expenditure, and should, if possible, be avoided. When tunnels are cut through rock of a solid and durable character the roof supports itself; but when in loose or easily decomposed rock, or in earth, an artificial arched lining becomes necessary. Such lining is generally made of brick, especially the arched part, on account of the greater ease of handling and laying brick than stone in so confined a situation. Among the difficulties attendant upon the construction of tunnels are the want of light, air, and drainage. As tunnels generally occur upon summits, or on the approach to them, the latter requirement may be met by the introduction of a light gradient. The lower end upon the gradient will drain itself; the upper end will require pumps; an occasional well being sunk as low as the contemplated road-bed, or a little lower, to collect the water. Short tunnels may be built by working from the ends only; but as a very limited number of hands can be employed on so small a working face as the heading affords, when the length becomes considerable, shafts are sunk from the surface to formation, and from the bottom of these, headings are run in both directions. This operation involves a large expenditure, as all draining, ventilating, and removal of materials must be effected through the shaft.

In cutting a tunnel in rock, a small heading, 6 or 8 ft. square, is first taken out by one gang of men, while a larger gang follows in the rear, enlarging the work to the full size, and putting in the masonry where such is required. The rapidity with which the small opening can be worked is the measure of the progress of the whole; as the enlarging and lining allows the employment of more hands than the limited dimensions of the heading can accommodate. After a tunnel has been driven about 500 ft. artificial ventilation becomes necessary. This is accomplished by the ordinary mining expedients, drawing off the bad air by the draught of a chimney with a fire at the bottom, or forcing fresh air in. If the shaft is made in the bottom of a depression, in order to reduce its length, it may be necessary to provide for the surface drainage in such a locality; regard should be paid, in laying out the work, to this requirement. The general practice in England has been to multiply the number of shafts; and in some cases, tunnels have been cut entirely through from the shaft headings, before the approaches were taken out. In tunnels made through loose material, it has frequently been the practice to commence by running forward two small headings, in which the side walls are built, before the remainder of the section is excavated. In other cases, the upper part of the tunnel has been opened first, and the arch built; the space for the side walls being next excavated, and the arch propped by timbers until the walls are built up to connect with it. When the gradient descends from a shaft, or at the end of a tunnel where the gradient descends into the work, and the water follows the operations in a troublesome manner, the heading may be commenced at the bottom of the intended section, and run along, on a slight ascent, until it reaches the top, when a pit may be sunk to the level of the floor, and the heading may be started again, and the ascent commenced anew. The size and proportions of tunnels may be illustrated best by reference to examples. The Box Tunnel, Fig. 6465, is between Chippenham and Bath, upon the Great Western Railway, in England. It is 3200 yds. in length, 30 ft. wide at the widest, and 24½ ft.

6465.

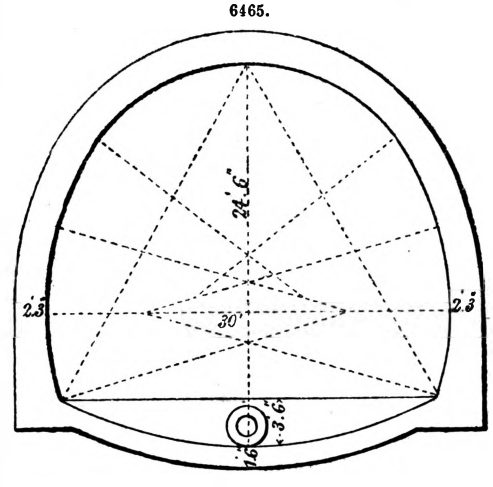

high above the roadway. Nearly half of it passes through the Bath oolite limestone, and the other half through clay. It is straight, and rises from one end to the other upon a gradient of 1 in 100, or 52·8 ft. a mile. For about three-fourths of a mile it has no lining; the remainder is finished with side walls of the oolite and an arch of brick. There are seven shafts, having an internal diameter of 25 ft., widened to 30 ft. where they intersect the tunnel. The deepest shaft is about 300 ft. They are lined with brick.

The Brislington Tunnel, upon the same railway, 1100 yds. long, has nearly the same section as the Box, and is made in a very hard rock. This short tunnel has nine shafts; in order to hasten the work, a driftway, 7 ft. wide and 8 ft. high, made in eight months, was run the whole length before the enlarging was commenced. The whole work was done from the inside, on account of the heavy cuts at the ends. The enlarging of the heading was carried on at all of the nine shafts; but the materials were raised up by only three, which were about 110 ft. deep and 15 ft. internal diameter.

The Woodhead Tunnel, upon the Manchester, Sheffield, and Lincolnshire Railway, near Manchester, is 3 miles 26 ft. long, 14 ft. 4 in. wide at the level of the rails, and 18 ft. 3 in. high, from the rails to the under side of the arch. The sides are vertical, and there is no invert. The road is provided with a small drain, next the wall upon each side. A second tunnel, of precisely the same dimensions, was afterwards built parallel with it, separated by a longitudinal pier, 21 ft. thick, through which are twenty-one arched openings, about 12 ft. wide, connecting the two. The first tunnel was made with shafts, about 10 ft. in diameter, upon one side of the centre line, which now descends into the middle of the connecting arches. In making the second tunnel the shafts were not used; but the side walls were first cut through, and openings made horizontally into the line of the new tunnel, all of the material being brought by cross roads to the finished line, and run out in cars.

The Kilsby Tunnel, upon the London and Birmingham Railway (London and North-Western), is about 2400 yds. long, with a section of 27 × 23½ ft. It is cut through clay and sand, and occupied about four years in its construction. It was intended to make the brick lining 18 in. thick, but this was increased, for the most part, to 27 in. The whole was laid in Roman cement. During the construction of this work an immense quicksand was encountered, out of which water was pumped for eight months, night and day, at the rate of 1800 gallons a minute. The large shaft, 60 ft. in diameter and 132 ft. deep, was completed in a year; its walls are perpendicular and 3 ft. thick; the bricks being laid in Roman cement. This immense shaft, as well as the second, which was 30 ft. less in depth, was built from the top downwards, by excavating for small portions of the wall at a time, from 6 to 12 ft. long and 10 ft. deep. The whole number of bricks used in this tunnel was 36,000,000. The cost, which was estimated at 90,000*l*., reached the sum of 350,000*l*.

The Netherton Tunnel, upon a branch of the Birmingham Canal, was completed in 1858. It is 3036 yds. in length, 27 ft. wide, and 24 ft. 4 in. high. The brickwork for the lining was generally 1 ft. 10½ in. thick in the side walls and arch, and 1 ft. 1½ in. in the invert; the thickness being increased where the shafts join the arch, and also in some places where the ground was bad. At several points the invert was pressed up from beneath, in some cases as much as 5 in., the bricks remaining unbroken. In one place, where the bottom was forced up 8 in. at the centre, and the bricks were crushed, the invert was cut out for a length of 130 ft., and rebuilt 1 ft. 10 in. thick. This was done in short pieces—about 6 ft.—at a time, the side walls being carefully strutted. In rebuilding a portion of this invert, 49 ft. in length, the versed sine was increased to 2 ft. 6 in.

There were seventeen shafts, 9 ft. in diameter, seven of which were left permanently open, and lined with brickwork 9 in. thick. This brickwork was built upon an oak curb 9 × 3 in., from beneath which the earth was excavated, the curb being temporarily propped until underpinned by the brickwork brought up from the second curb below. The greatest depth of the shafts was 344 ft., and the least 66 ft. The average rate of progress a day of twenty-four hours, from the commencement to the completion of each shaft, was 2 ft.; but counting only the days upon which work was actually done, 3 ft. 4 in. The material was chiefly blue marl. The size of the heading was 5 × 3 ft., the bottom being level with the top of the invert.

The Almondsbury Tunnel, near Bristol, upon the Bristol and South Wales Junction Railway, Fig. 6466, is 1221 yds. long, 18 ft. 6 in. wide at the widest part, 17 ft. wide at the road-bed, and 19 ft. high. It was built for a single track; the whole work being done by means of the shafts, of which there were five; the deepest being 144, and the least 67 ft.

6466.

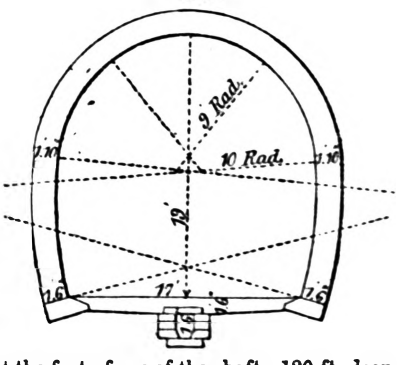

The Sydenham Tunnel, on the London, Chatham, and Dover Railway, is 2100 yds. long, and is made through the London clay. It had seven shafts, varying from 50 to 186 ft. in depth, and 9 ft. internal diameter. Two only of these shafts were intended to be left open permanently. The clay in which this work was executed, through yielding freely to the pick, afterwards swelled and crushed the masonry. The shafts were made 9 ft. in diameter, but were afterwards pressed in, so as to be hardly more than 6. The headings were 4 × 6 ft., and were run forward at the top, and not the bottom, of the excavation. The original section is shown in Fig. 6467. But the swelling of the clay so forced in the masonry that 6780 cub. yds. of the side wall and 2065 yds. of the invert had to be rebuilt. At the foot of one of the shafts, 120 ft. deep, which was the worst place, the tunnel was at first lined with eight rings of bricks, making a thickness of 36 in. This was cut out and replaced, first by ten, and again by twelve rings of brickwork, or 4 ft. 6 in. of thickness; and even some of the last had to be replaced.

The shafts had at first a lining of brick 9 in. thick; but this was so pressed in, and the diameter

so reduced, as to require a new lining 18 in. in thickness. This action of the clay begins very soon after the excavation is made; if it is not noticed within two months, it is no longer feared. The action at the top of the arch is slight, the principal effect being on the invert, which rises first at the centre and afterwards at the sides. The dotted line in the figure shows the altered shape of the original section. The form was afterwards changed; the first step being to lower the invert, which showed such a tendency to rise, and the next to lower the arch and flatten it at the top, until finally the section of the tunnel was almost a circle, the thickness of the lining above the road-bed being 4 ft. 6 in., and that of the invert 3 ft. Preference was given in this work to lime-mortar over cement, as it hardens more slowly, and receives the first pressure gradually, by which the bricks do not break so readily.

6467.

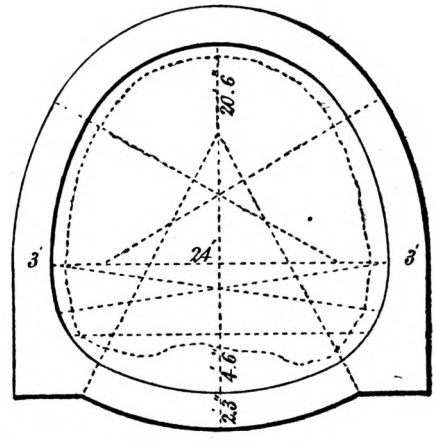

The Bletchingly and Saltwood tunnels are between London and Dover, upon the South-Eastern Railway. The Bletchingly is 24 ft. wide, and 21 ft. from the top of the rail to the under side of the crown of the arch; the versed sine of the invert being 3 ft., and the form as in Fig. 6468. The length is 3972 ft.; the tunnel being inclined at the rate of 3 ft. in a mile. The material through which it is cut is blue

6468.

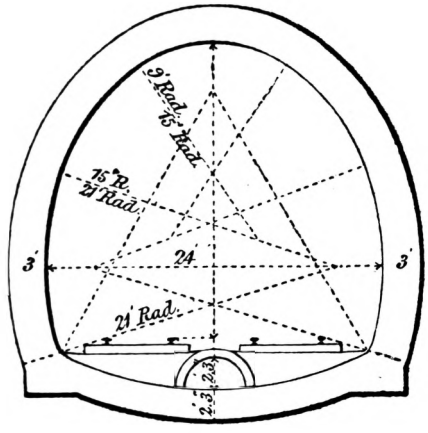

6469.

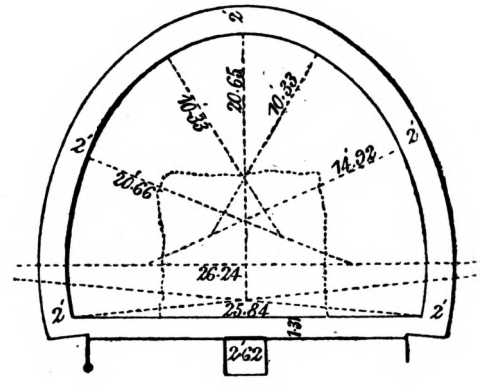

clay. The thickness of the lining varies from 1 ft. 10½ in. to 3 ft., according to the ground. The time occupied in the construction was 626 days.

The Hauenstein Tunnel, between Basle and Olten, upon the Central Swiss Railroad, is 2729 yds. long, of which 1970 yds. were cut from one end. This work passes through limestone, sandstone, and shale. It is made for a double track, being 26 ft. wide, 20 ft. high above the rails, and of the form shown in Fig. 6469. In some places it has an invert and at others none. The line is straight and the gradient uniform, rising 1 in 38, or 139 ft. in a mile. The masonry is limestone, no bricks being used. The heading was about 10 ft. square, and run forwards at the bottom; but on account of the water that followed the descending gradient, it was not kept parallel with the intended road-bed, but was run from the bottom up towards the roof, within the limits of the section. From the heading enlargements were made at different places, to get additional working faces.

6470.

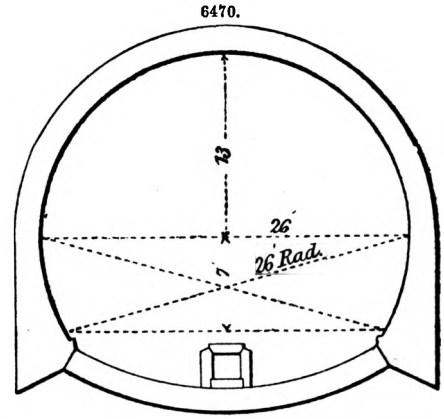

The Mont Cenis Tunnel, which was completed in the summer of 1871, is, without doubt, the largest work of this kind ever undertaken. It is 7 miles 1044 yds. long, and of the section Fig. 6470. The grade rises at the rate of 117·22 ft. a mile, or 444·90 ft. in all, from the French end to the centre; and falls, for the purpose of drainage, at the rate of 2·64 ft. a mile, or 10·04 ft. in all, from the centre to the Italian end; thus making the southern portal 435 ft. higher than the northern. The tunnel is lined with masonry throughout, but with no invert, a covered drain being made in the centre. The side walls are of stone, laid in regular courses, and the arch upon the Italian side in brick. Recesses, large enough for several men, are made at frequent intervals, and at every 550 yds. a tool chamber, 10 or 12 ft. square, is provided. The side and arch masonry is about 2 ft. thick, though varying at different points. The tunnel has no shafts, being at the

deepest more than a mile beneath the summit. The drilling at this great work was done by machinery, the tools being arranged upon a carriage, and driven by a most ingenious application of compressed air, which, after furnishing the required power, escaped, and served to ventilate the heading. The progress of the tunnel was such as to give a total advance of 30,068 ft. in twelve years, or 2506 ft. in a year, or 209 ft. a month, or 104·5 ft. a month at each working face.

Fig. 6471, which is a section of the Spruce Creek Tunnel, on the Pennsylvania Railroad, shows how little room there is to spare when two trains occupy the metals; the width in this case is 23 ft. at the widest part, the gauge 4 ft. 9 in., and the width between rails 6 ft. The Alleghany, or Gallitzin Tunnel, upon the same road, has a width of 24 ft.

6471.

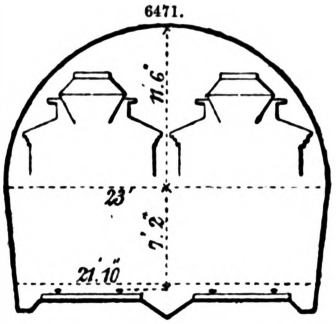

6473.

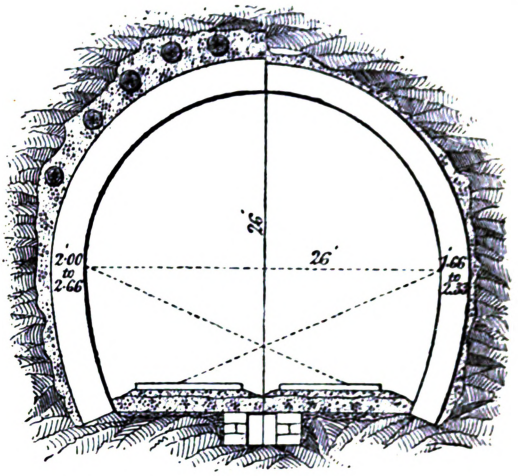

6472.

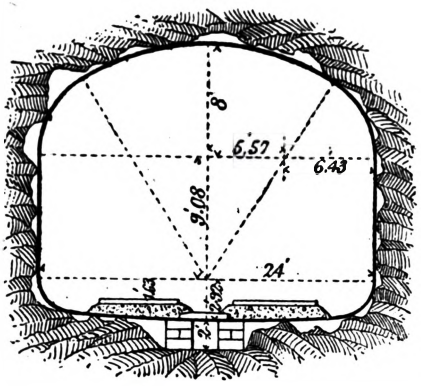

6474.

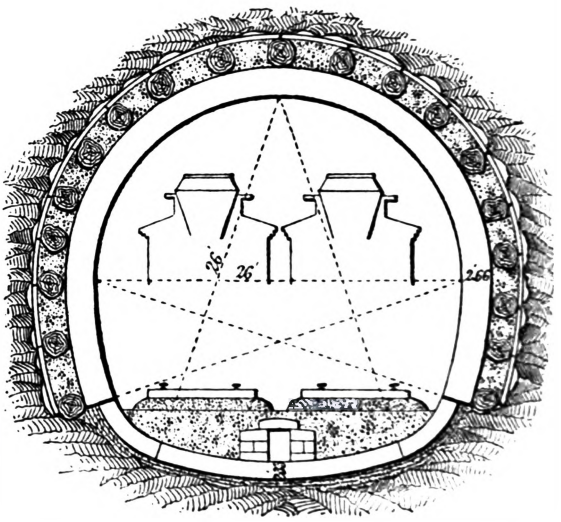

The Hoosac Tunnel in process of construction (1873) beneath the mountain of the same name in Western Massachusetts, is 25,031 ft., or $4\frac{3}{4}$ miles long. It is to be of the form and dimensions shown in Figs. 6472 to 6474, Fig. 6472 representing the section in the solid rock where a lining is not required. The right-hand half of Fig. 6473 shows a half section of the tunnel arched: the left-hand half of the same figure shows a half section with the lining and with a preliminary timber support to the roof, to protect the workmen until the brick arch is completed. Fig. 6474 is a section of the lining where an invert is required. The gradient rises at the rate of $26\frac{40}{100}$ ft. a mile from each end to the centre. Shaft No. 1 is 1498 ft. from the western end, and has a section of 6 × 6, and a depth of 215 ft. Shaft No. 2 is 2183 ft. from the western end, and has a section of 13 × 6, and a depth of 277 ft. These shafts were sunk for the purpose of drainage, before the heading had been driven through from the west end. The west shaft, 2447 ft. from the western end, is 14 × 8 ft., and 318 ft. deep, and is the working shaft where the material excavated eastward was hoisted. The central shaft, about midway between the ends of the tunnel, is elliptical in section, 27 ft. in diameter along the line of the road, 15 ft. in diameter across the road, and 1030 ft. deep. The Hoosac Mountain, on the line of the tunnel, rises to a height of 2500 ft. above the sea, and about 1800 ft. above the road. There is a double summit, and the central shaft is placed in the intermediate depression.

The general character of the rock at the eastern end and at the central shaft is mica slate with quartz; and at the west shaft a hard quartzite. The first 2000 ft. at the western end, being through a rapidly decomposing material, required to be arched with brick. The headings have been driven, and much of the enlarging done, by the machine known as the Burleigh Rock Drill. These drills are in each heading mounted upon two carriages, standing side by side, with a space of about 6 ft.

between them. Each carriage supports five drills; but seldom more than four, eight in all, are in motion at one time. They make from 180 to 260 strokes a minute, with a pressure of 60 lbs. an inch.

When a blast is to be fired, these carriages are run back out of the way. The power for working the drills, compressed air, is the same as that used at the Mont Cenis Tunnel.

At the eastern end of the work a dam across the Deerfield River gives a head of 21 ft., which works four turbine-wheels, each wheel working four air-cylinders. The air, compressed to a tension of about 65 lbs. an inch, is conveyed into the tunnel through two 8-in. cast-iron pipes; and experience shows that it loses little or nothing of its force in the transit.

When the gauge at the compressors shows 65 lbs., that at the heading shows 63 lbs. At the eastern end the excavation of the heading is effected by ordinary cannon powder, and the enlarging by nitro-glycerine. At the western end, where the rock is very much harder, nitro-glycerine is almost wholly used; and the central shaft has been sunk altogether with the same material. About 6000 lbs. of this new explosive, and 250 kegs, of 25 lbs. each, of powder, are used every month. The explosion is effected wholly by electricity, every charge in a blast, sometimes as many as thirty, being discharged simultaneously.

The underground work is carried on in three shifts daily, eight hours being a day's work; thus the tunnelling goes on unceasingly through the twenty-four hours, Sunday only excepted.

The preceding sections are all drawn to the same scale, and thus show the correct relative size of the various tunnels referred to.

The most modern system of tunnelling is that employed on the London Metropolitan Underground Railways. Fig. 6475 is a cross-section of the general type of tunnel adopted. The dimensions vary a little in some parts, but, as a rule, are as follows. The span in the clear of the arch is 28 ft. 6 in. The thickness of the arch, 2 ft. 5 in., or equal to six rings, and backed by concrete spandrils. The height from the level of the rails to the crown of the arch is usually 16 ft. 6 in., but on some parts of the line it is increased to 18 ft. 9 in. Every portion of the length of the tunnel is provided with a drain, which is carried underground in the centre between the two lines of rails; and every area and pocket and basin, or funnel-shaped collector of land and surface water at the back of the walls or over the asphalte covering of the tunnel, has its down-pipe, and its connection carefully made.

6475.

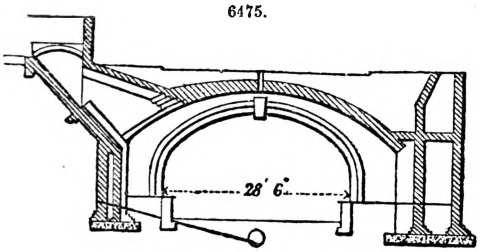

6476.

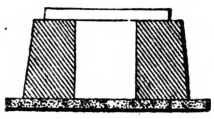

Culverts.—The simplest form for a culvert carrying a small stream beneath an embankment is shown Fig. 6476. It consists of two side walls and a covering of flags, and forms a very economical structure, when flat stones can be readily procured. Care should be taken that the water-way of all culverts is in excess of their actual requirements, and no water should ever be allowed to find its way behind or underneath the masonry. The following dimensions given in Table III. will serve as good approximate guides for general use. Under high embankments the depth of the flag may be increased at the centre of the length of the culvert, when the weight is a maximum. A face wall may be built to a culvert when appearance is an object, as in Fig. 6477, and for larger streams wing walls, Fig. 6478, are usually built. A cross-section would have the appearance represented in

6477.

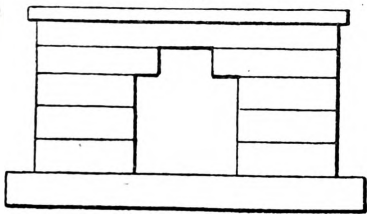

6478.

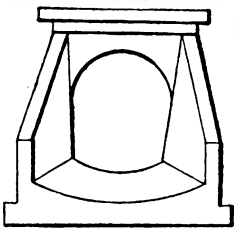

6479.

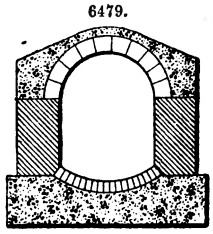

Fig. 6479. Culverts are classed according to their different spans, and when small in size are usually called drains. A common practice with the English Drainage Commissioners is to place the invert of the culvert about 5 ft. below the natural surface of the ground. On this assumption, the depth of filling over any culvert in an embankment may be thus obtained. Let D = the required depth, H the height of the culvert between the invert and the top, and H_1 the height of the embankment. Then we have $D = H_1 - (H - 5)$. The length of the culvert, putting R for the ratio of the slopes, B for width of formation level, and L for the length, will be $L = (H_1 - H + 5)\,2\,R + B$. If the width of the formation level be that of an ordinary single line, equal to 18 ft., and the ratio of slopes $1\frac{1}{2}$ to 1, the length in yards of the culvert will be given by the equation

$$L = 2R(H^1 - H + 5) + B + C.$$

TABLE III.

Area.	Opening.	Side Wall.	Depth of Flag.	Length of Flag.
4	2 × 2	2 × 2	12	5
9	3 × 3	3 × 2½	16	6
16	4 × 4	4 × 3	20	7
25	5 × 5	5 × 3½	22	8
36	6 × 6	6 × 4	24	9

Fencing.—In some countries the line is not fenced at all, but in all those in which the property on either side is held by private landowners, fencing of some sort is indispensable. The readiest made description of fence, when labour is cheap, is that commonly used in Ireland, and consists of a ditch and mound as shown in Fig. 6480. The material excavated from the ditch is thrown into the mound, and a quickset hedge planted along the top. After the lapse of some time this makes a good fence, but it requires in the interim a considerable amount of repair. It is also very liable to be trodden down by cattle, and people walking on the top of it. The common timber post and rail fence is well known, and there are besides an almost infinite variety of iron fencing. When the line passes through a private demesne, iron fencing of an ornamental description is frequently employed. Perhaps the best fence that can be put up along a line is the dry stone wall. If well built, and the stones well bonded together, with a rough coping set in mortar, edgeways, it forms an excellent protection against the trespass of both man and beast.

6480.

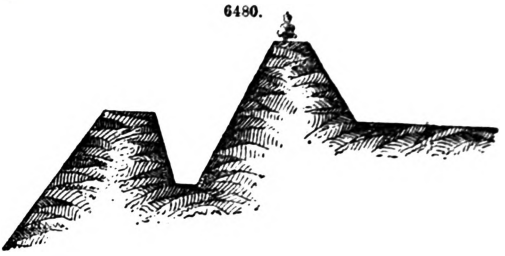

Metalling and Pitching.—See ROADS.

Ballasting and Boxing.—The material most commonly used for ballast is gravel, or broken stone; and when these cannot be obtained, burnt clay, cinders, slag, broken brick, shells, and even small coal have been made use of. Whatever material is employed, it should be hard and clean, and capable of binding into a solid mass, to prevent it being washed away from under the rails and sleepers. The common width for ballast on the standard gauge is 14 ft. for a single and 26 ft. for a double line of way. The depth is about 1 ft. 9 in. to 2 ft. Boxing is the upper 6 in. or so of the ballast, and must not be quite so coarse as the lower stratum. The quantity of ballast to the mile required for different depths and widths is given in Table IV.

TABLE IV.

Depth in inches.	Cubic Yards of Ballast a Mile. Slopes 1 to 1. Width on top for					
	Single Line.			Double Line.		
	10 feet.	11 feet.	12 feet.	21 feet.	22 feet.	23 feet.
16	2955	3216	3477	5823	6084	6344
18	3375	3667	3960	6600	6894	7187
20	3802	4128	4454	7387	7713	8039
22	4242	4600	4959	8186	8544	8903
24	4693	5084	5475	8996	9387	9775

Laying Permanent Way.—The laying of the permanent way is but too often left almost entirely to the platelayers. This is a serious mistake. Proper centre stakes should be put in, especially in the curved portions of the line, and particular care paid to the super-elevation or cant of the outer rail. The tendency for a carriage to leave the metal when running round a curve results from three causes. 1st. The centrifugal force; 2nd. The parallelism of the axles; and 3rd. The slip of the wheels. Put V for the velocity of a train in feet a second, R for the radius of the curve, F for the centrifugal force, and W for its weight. Then the following proportion prevails $F : W :: \frac{V^2}{32 \cdot 2\,R} : 1$. This is the ratio which the cant or elevation of the outer above the inner rail of the curved line of rails must bear to the gauge or transverse distance between the rails. Let V be the speed in miles an hour, G the gauge, and C the cant for the centrifugal force, then $C = G \times \frac{V^2}{15\,R}$ nearly. One half the cant should be given by raising the outer rail above the level of the centre line, and the other half by depressing the inner rail. It is obvious the cant cannot be adjusted for all speeds, and the safest plan is to adopt it nearly to the maximum speed. If an average speed of 40 miles an hour be assumed as the datum, the cant for different gauges and different curves will be found in Table V. The tendency to leave the line, which arises from the axles being parallel instead of radiating from the centre of the curve, cannot well be distinguished from that due to the slipping of the wheels, which is thus caused;—The outer rail of any curve is

longer than the inner rail in the proportion of the radius added to the gauge radius. While the inner wheel rolls over a given arc of the inner rail, the outer wheel, if it be of the same diameter with the inner wheels, has to slip over a distance equal to the difference of the lengths of the rails. This causes an additional resistance to the advance of the outer wheel of each pair of wheels, tending to make the front end of the carriage swerve outwards. The taper or coning of the wheels was designed to prevent this tendency, by causing the outer wheel to run on a portion of its tire of larger diameter than that on which the inner wheel runs at the same time. The coning of the wheels has the disadvantage of increasing the oscillation or sideward lurching of the trains when running on a straight line. This tendency to swerve may be corrected in cylindrical wheels by means of an additional cant, which throws the larger proportion of the weight on the inner rail. The additional cant required for that purpose was determined experimentally by D. Rankine and W. J. M. Rankine, for carriages moving on a narrow-gauge line at speeds of from 3 to 12 miles an hour, and found to be independent of the velocity and inversely proportional to the radius of the curve. Putting C for the additional cant in inches, we have $C = \frac{7200}{R}$, in which R is the radius of the curve in feet. The use of bogeys or axle-boxes sliding in curved guides renders this additional cant unnecessary.

TABLE V.

Gauge.	Cant for Centrifugal Force in inches.
4 ft. 8½ in.	6000 ÷ radius in feet.
5 „ 3 „	6680 ÷ „ „
6 „ 0 „	7680 ÷ „ „
7 „ 0 „	8960 ÷ „ „

Expansion of Rails.—The ends of rails if laid at a low temperature must not be placed in contact, since wrought iron expands 0·0000068 of its length for each degree Fahr. A change of temperature of 130° will cause the following elongation in rails of different length. A rail 15 ft. in length will become 15·0133 ft.; if 18 ft., it will be 18·0159 ft.; and if 20 ft., 20·0177 ft. If we assume the maximum temperature at which rails may be placed in contact to be 100°, then the distances to be left between the joints at different temperatures are given in Table VI. Rails which have been laid in contact in cold weather, have been thrown out of line and out of level more than a foot by the powerful force of expansion, which may be said to be irresistible. In fishing all joints, the holes in the chairs must be longer than those in the rails, in order to allow of the proper expansive motion. Serious accidents have happened through the neglect of this simple precaution, even on lines upon which the rails weighed over 80 lbs. a yard, and were well secured by fish-joints.

TABLE VI.

Temperature.	Distances in inches.	Temperature.	Distances in inches.	Temperature.	Distances in inches.
°		°		°	
90	0·016	40	0·114	0	..
80	0·049	30	0·131	10	0·179
70	0·065	20	0·147	20	0·196
60	0·082	10	0·163	30	0·212
50	0·098				

Specification.—A specification or detailed description of the various works to be carried out is always attached to a contract. It would require considerable detail to treat this subject fully, but we may briefly mention a few prominent points in connection with it. The description of the commencement and end of the work should be very accurately and minutely stated. The clauses also should be very distinct which relate to the time allowed, the mode of payment, the testing and delivery of materials, and the penalties provided in each separate instance. Attention to these points not only materially contributes to the rapid and efficient execution of a contract, but avoids all future arbitration and litigation. A good specification should be the joint production of both engineering and legal ability, neither unduly sacrificing the one feature to the other. While proper tests should always be stipulated for, yet if they are carried to an extreme degree, as frequently happens, they defeat their own object. When it becomes impossible to carry out certain unreasonable demands, the alternative is to evade them as much as possible; and it must always be borne in mind that the more stringent the demand, the greater the difficulty in enforcing it.

See ARCH. BALLAST. BRIDGES. CONSTRUCTION. PERMANENT WAY. SIGNALS.

RATCHET-WHEEL. FR., *Roue à rochet;* GER., *Sperrrad;* ITAL., *Ruota a nottolino;* SPAN., *Rueda de trinquete.*

A circular wheel having angular teeth, by which it may be moved forward, as by a lever and catch, or pawl, and into which the pawl may drop to prevent the wheel from running back. See MECHANICAL MOVEMENTS.

REACTION. FR., *Réaction;* GER., *Reaction;* ITAL., *Reazione;* SPAN., *Reaccion.*

In mechanics, reaction is the force which a body subjected to the action of a force from another body exerts upon that body in the opposite direction.

REACTION-WHEEL. FR., *Roue à réaction;* GER., *Reactionsrad;* ITAL., *Ruota a reazione;* SPAN., *Rueda de reaccion.*

See BARKER'S MILL.

REAMER. Fr., *Alésoir;* Ger., *Reibahle;* Ital., *Allargatore;* Span., *Avellanador.*

Reamer or Rimer is a tool used to enlarge a hole in a bevelled form.

RECORDING PRESSURE-GAUGE. Fr., *Manomètre enregistrant;* Ger., *Manometer zum Anzeigen von Dampfdruck;* Ital., *Piezografo;* Span., *Manómetro automator.*

The objects of a recording steam-pressure gauge are to secure a true record of all pressures and variations of the same for reference, either in the interest of science or in investigations before coroners' and other juries, and for inspection by insurers, proprietors of manufactories, steamers, stationary engines, and locomotives, to ascertain at any time the past as well as the present strain or pressure sustained; also whether the employés are attentive to their duties and uniform in feeding the fuel and water, or whether they are careless, irregular, or incompetent, and therefore untrustworthy in the discharge of such important duties as surround the generation and use of steam, whether at high or low pressure. These objects are well attained in M. B. Edson's recording gauge, Figs. 6481 to 6483.

6481.

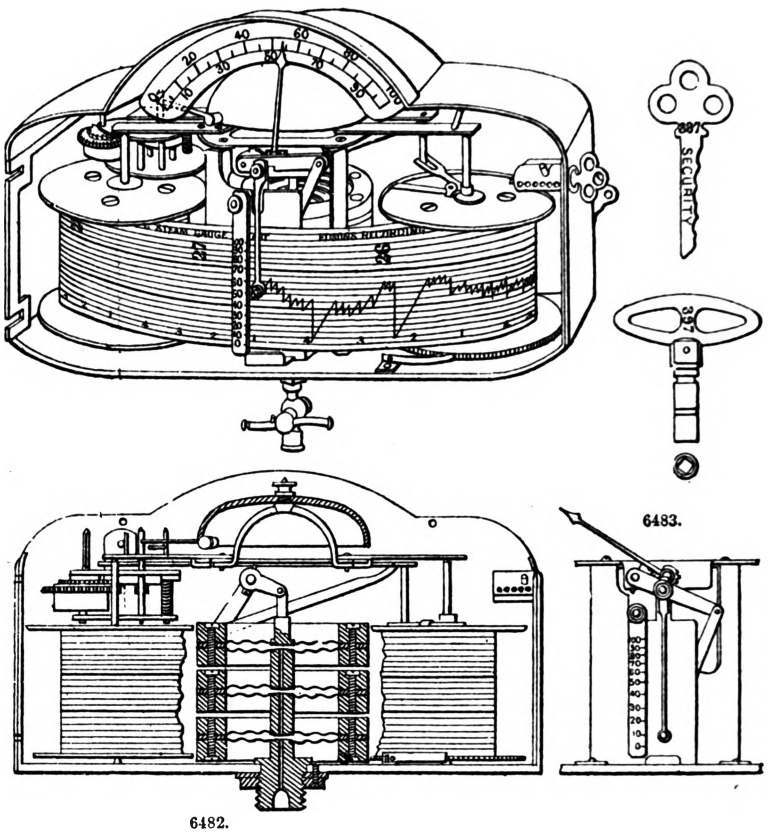

6483.

6482.

The springs consist of a series of circular elastic chambers; they are composed of thin circular steel discs, with corrugations, each pair forming a chamber by means of a flat brass or composition ring interposed between their outer edges, and having two compressing rings, one above and one under the discs, the whole being secured firmly together by screws, so as to be steam and air tight. A thin flat packing of foil or of sheet rubber is interposed for packing between the discs and the rings, and the discs, the rings, the couplings, and other parts are electro-plated with nickel to prevent oxidation, and thus preserve their accuracy for a long time. These chambers are connected together by hollow connections or couplings secured to the centres of the discs around an opening, and they are provided with alternate male and female screw threads, so as to be joined together in a series, the joints being steam and air tight. The lowest chamber is secured to the bed-plate, and is provided with a coupling, by which connection is made through a suitable pipe with a boiler or other vessel in which the fluid under pressure is generated. The upper chamber has on the top plate or spring a short, fixed, slotted vertical stud. These chambers are surrounded by a suitable casing, which supports the bearing whereon the oscillating rack and other parts are fitted. This casing is secured to the bed-plate to prevent any variation in the working parts. Upon a bearing is a segmental rack oscillating vertically upon points, and having on its outer segmental periphery teeth which gear into a pinion fast upon the horizontal shaft, on the front end of which is fixed a large spur-wheel for operating the vertical rack that carries the spring pencil-holder. On the opposite end of the horizontal shaft a smaller spur-wheel is fixed to gear into and to operate a horizontal sliding rack which passes through slots in the frame at each end. Upon the side of this segmental rack is fixed an open rectangular frame or shoulder, within which is placed the sliding adjustable link, and which is made to slide towards or from the centre of oscillation of the segmental rack by means of the two adjusting screws at the opposite ends. A connecting rod is at its upper

end pivoted upon a pin fast in the link, and at its lower end is fastened by a pin to a stud. The use of the sliding link is to increase or diminish the extent of the oscillation of the segmental rack. A reservoir drum, upon which the paper chart is wound, has its bearings upon conical points at the centre of the drum heads, the lower being fixed in the bed-plate and the upper bearings being the ends of adjustable screws, which pass through the horizontal brackets. Upon the opposite side of the cylindrical casing is the receiving drum, which has its bearing at the bottom, similarly to the reservoir drum. These drums have each a narrow slot, behind which is fitted an eccentrically-flattened rod to clip and hold the paper chart. Around the edge of the top of the receiving drum is a raised rim making a hollow circular space, in which is placed a universal or constant pawl, which is centred upon the drum head, but moving horizontally upon the said bearing. The short arm of the pawl is so arranged that when the long arm is pushed from the centre it will slip around within the rim loosely, so as not to turn the drum; but the instant the long arm is drawn towards the rack, the short arm will impinge upon the rim, and thus cause the drum to rotate. The pawl-lever is operated by a fixed pin in the end of the horizontal rack. The paper for the charts is wound around the first drum, and is passed in front of the bearing upon the casing, and between the said bearing and the pencil-holder, passing thence to and around the receiving drum. The paper chart is ruled with horizontal lines, and figured on the drum from zero to 90 lbs. pressure. The chart may also have zigzag tracings, indicating fluctuations in pressure. In front of the cylindrical frame the vertically-sliding rack rests in frictionless bearings upon the frame; the teeth of the rack mesh closely into those of the spur-wheel, by which the rack is operated, and is made to carry the pencil-holder up or down as the pressure is increased or diminished.

REFRIGERATOR. Fr., *Réfrigérant;* Ger., *Kühlfass;* Ital., *Refrigerante;* Span., *Refrigerante.*

See Ice Machine.

RESERVOIR. Fr., *Réservoir;* Ger., *Behälter;* Ital., *Serbatoio;* Span., *Estanques; algibes.*

See Water-works.

RETAINING WALL. Fr., *Mur de soutènement;* Ger., *Stützmauer;* Ital., *Muro di sostegno;* Span., *Muros de contencion.*

Retaining Walls are masonry structures designed to impound or support fluid, semifluid, or granular materials, and are employed under various forms in the construction of fortifications, reservoirs, docks, wharves, sea defences, and lines of inland communication. In these constructions they appear as revetments, dams, and weirs, dock and sea walls, piers, breast walls, and wing walls. A retaining wall is said to be surcharged when the bank it retains slopes backwards to a higher level than the top of the wall. The slope of the bank may be either equal to or less, but cannot be greater, than the angle of repose of the earth of the bank.

In determining the proportions of retaining walls, engineers have been guided by principles deduced from the practical data furnished to mathematicians by the experiments and constructions of successful builders, so that theory and practice have gone hand in hand in establishing the laws and rules which lead to economical and skilful design. The same mechanical laws apply to retaining walls equally with all masses of masonry pressed by oblique forces, and it is therefore convenient to treat the subject of their equilibrium under the distinct heads of—the stability of the wall; and the pressure or thrust of the material retained—the combination of the results leading to the determination of the proper dimensions of the profile of the wall. It is usual in investigations connected with these subjects to confine the calculations to some unit of length of wall; the unit, therefore, which will be adopted for uniform walls, that is, walls of constant cross-section, in this article, unless otherwise expressly stated, will be 1 ft., taken at right angles to the plane of the profile or cross-section of the wall.

Stability of the Wall.—A mass of masonry pressed by an oblique thrust may fail through heeling over in the direction in which the thrust acts, or it may slide bodily forward, either on its base or on some plane in its substance. It will hereafter be seen that the contingency of sliding may, under ordinary circumstances, be dismissed from the consideration; but the effect of the heeling tendency must be carefully investigated in all cases.

A wall, in most text-books on the stability of structures, is treated as if it were a homogeneous adamantine mass which could actually turn over round the outer angle of its base, as on a knife edge; but this, except in very small structures, is an impracticable, not to say impossible, assumption, for there can be no doubt that in large walls the masonry of the face would crush, and the mass disintegrate near the point of rupture, long before the wall could actually tilt.

The resultant of an oblique thrust in a mass resting on a horizontal base may be resolved into two components—the vertical, causing a vertical stress or pressure on the base; the horizontal, tending to push forward the mass. The resistance which the wall opposes to the effects of the former is called its statical stability; to the latter, its frictional stability.

In retaining walls, the vertical stress is made up of the weight of the wall; and the vertical component, if any, of the thrust of the material retained by the wall; while the horizontal force is simply the horizontal component of the same thrust.

Dealing first with the statical as distinguished from the frictional stability of the wall, we find that when the resultant of all the forces acting on the mass passes through the centre of figure of its base, the vertical pressure is considered to be a stress distributed uniformly over the base; its amount at all points is equal and of a mean intensity, found by dividing the total vertical pressure by the area of the base. When, however, the resultant does not pass through the middle of the base, the centre of resistance, which is the point of application of the resultant in the base, will not coincide with the centre of figure of the base, and therefore the stress will increase in intensity on that side towards which the resultant deviates, according to a law which is, that the intensity is at any point proportional to the horizontal distance of the point along an axis in the direction of the thrust. This is the law of an uniformly varying stress. It is this increase of pressure on the edges of the base which tends to crush the materials of the wall, and cause failure long before the

resultant or centre of resistance can have reached the face of the structure. When the resultant passes outside the face, the pressure being unbalanced, the wall must heel. We will confine ourselves to the stability of walls independently of their foundations, although it is easily seen that the same principles may be applied to the resistance of the materials composing the foundations as well as to that of those of the wall. We shall therefore suppose our walls placed on secure foundations. Failure of foundations through excess of stress nevertheless must be guarded against as likely to occur in retaining walls—a notable instance of such failure being the Puentes dam in Spain, already referred to, Fig. 2248, in article Damming.

The diagram in Fig. 6484 represents the distribution both of an uniform and an uniformly varying stress. The rectangle A B C D represents the former; one of the other figures, contained by dotted lines, as C′A′, B D, the latter. Let A B be a plane forming the base of a wall, and let the resultant pass through the centre *o*. Erect a perpendicular $\overline{o\,o'}$, equal to the mean intensity of the vertical stress; and since the stress is uniformly distributed its amount at every point is equal, and the total stress is represented by the ideal rectangle A B C D.

6484.

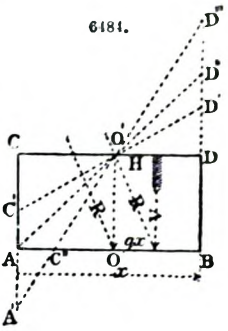

But when the resultant does not pass through the centre *o*, since the total amount of the vertical stress cannot vary, its mean intensity must remain constant and equal to $\overline{o\,o'}$, and therefore, as it varies uniformly, lines drawn through *o′* will form ideal figures representing the total stress, the ordinates of which will represent the stress at any point.

The ordinate at the point B will give the maximum stress or pressure at the face of the wall.

It appears, therefore, that the mean stress increases towards B as the ordinates of a triangle such as O′ D D′, and decreases towards A as those of an equal and similar triangle D′ C C′.

When the deviation of the resultant from the centre of the base is one-sixth of the breadth of base, the ideal figure is a triangle, as A B D′, in which B D′, representing the maximum pressure, is double O O′, representing the mean pressure. When the deviation exceeds one-sixth the breadth of base, a portion of the stress, represented by the triangle A A′ C, becomes negative, and denotes a tension; but a tensile force being practically an element too uncertain to deal with in masonry may be neglected, thus constituting an element of safety, while it simplifies the investigation.

The conditions of the problem, it will be seen, however, entail the use of alternate formulæ for the maximum pressure; one when the deviation of the resultant from the middle of the base is less than, or equals one-sixth the breadth of base, the other when it is greater. Let p be the mean intensity of the pressure on the unit of surface of the base $= \frac{\text{vertical forces}}{\text{area of base}}$; p' the maximum intensity of the stress on the unit of surface; q the ratio of the deviation of the centre of resistance, from the middle of the base, to the breadth of base; x the breadth of base; then so long as the deviation is not greater than one-sixth, the relation of p' to p is

$$p' = p\,(1 + 6\,q), \qquad [1]$$

and when the deviation exceeds one-sixth,

$$p' = p\left(\frac{2}{3\,(\frac{1}{2} - q)}\right). \qquad [1A]$$

These formulæ are identical with those already given in the article Damming, the notation being adapted to that here given by making $\frac{l}{2} - v = q$.

The following Table of examples gives the ratios of p' to p for several values of q, calculated by the preceding formulæ;—

TABLE A.

For Values of q *less* than, or *equal* $\frac{1}{6}$th.								
$q =$	$\frac{1}{12}$,	$\frac{1}{11}$,	$\frac{1}{10}$,	$\frac{1}{9}$,	$\frac{1}{8}$,	$\frac{2}{15}$,	$\frac{1}{7}$,	$\frac{2}{13}$,	$\frac{1}{6}$.
$\frac{p'}{p} =$	$\frac{3}{2}$,	$\frac{17}{11}$,	$\frac{8}{5}$,	$\frac{5}{3}$,	$\frac{7}{4}$,	$\frac{9}{5}$,	$\frac{13}{7}$,	$\frac{25}{13}$,	2.

For Values of q *greater* than $\frac{1}{6}$th.								
$q =$	$\frac{2}{11}$,	$\frac{1}{5}$,	$\frac{2}{9}$,	$\frac{1}{4}$,	$\frac{1}{3}$,	$\frac{3}{8}$,	$\frac{7}{16}$,	$\frac{1}{2}$.
$\frac{p'}{p} =$	$\frac{15}{7}$,	$\frac{20}{9}$,	$\frac{12}{5}$,	$\frac{8}{3}$,	4,	$\frac{16}{3}$,	$\frac{32}{3}$,	∞.

We see from what has gone before that it is requisite for the safety of a wall that the deviation from the middle of the base of the centre of resistance—the point where the resultant cuts the base—must be limited.

If it should exceed one-half the breadth of base, the wall would overset; and if it should equal the half-breadth, the maximum pressure being infinitely great would require an infinite resistance to crushing in the materials of the wall. The limit therefore clearly is that the deviation shall not be such a fraction of the base as will cause the maximum pressure to exceed the safe resistance to crushing of any of the materials of the wall; or, if f' be the safe resistance of the materials, that p' shall not be greater than f'.

To determine the thickness of the wall so that this condition shall be fulfilled, we must seek values of p and q, on which p' depends, in terms of x.

We know that $p = \frac{\text{weight of wall} + \text{vertical component of the thrust at back}}{\text{area of base of wall}}$; therefore if W_1

be the whole weight of the wall ; w_1 the weight of a cubic foot of its substance ; h the height of the wall ; $\frac{1}{n}$ the fractional part which the area of its profile bears to the area of a rectangle of equal height and breadth ; x the breadth of the base of the wall ; H the horizontal ; and V the vertical components of the thrust at the back of the wall ; we have

$$p = \frac{W_1 + V}{x} = \frac{w_1 h}{n} + \frac{V}{x}. \qquad [2]$$

If $q\,x$ and $q'\,x$ be the horizontal deviations of the centre of resistance of the base, and of the centre of gravity of the profile from the middle of the base, we have in Fig. 6485 $q\,x = OE$, $q'\,x = OK$, and $KE = q\,x \pm q'\,x$, the upper or lower sign being used according as the points K and E lie on the opposite or the same side of the middle of the base O ; O′K being the height of the centre of pressure equals $\frac{h}{3}$, therefore O′K : KE :: V : H,

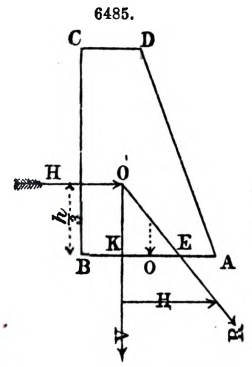

thus $\frac{h}{3} : (q \pm q')\,x :: V : H$, and hence we obtain

$$q = \frac{H\,h}{3\,V\,x} \mp q'. \qquad [3]$$

The following values of $\frac{1}{n}$ and q' are found for certain sections ;—

	$\frac{1}{n}$,	q',
Form		
Rectangles and parallelograms ..	1 ,	$\frac{r\,h}{2\,x}$,
Triangles	$\frac{1}{2}$,	$\frac{r\,h}{3\,x} - \frac{1}{6}$,
Trapezoids	$\frac{x+t}{2\,x}$,	$\left(\frac{r\,h}{3} + \frac{t-x}{6}\right)\frac{x+2\,t}{x+t}$,

where $r\,h$ is the batter of the face of the wall, t the thickness of the wall at top.

By substituting in equations [1] and [1A] values for p and q obtained by the above formulæ, and using for p' its limiting value f', the breadth of the wall may be calculated, as already shown in the article Damming, where the subject has been treated in detail by French writers.

The method of obtaining the profile of a wall or dam on the foregoing principles, as adopted by the French writers, is exceedingly complex ; but W. J. M. Rankine has, in connection with the design of a large reservoir-dam in Bombay, see article on Damming, recorded a more practical way of dealing with the subject, and his process or rules may of course be applied to any retaining wall. He writes ;—

"With respect to the profile of the wall, its figure is in the main to be determined by principles nearly the same with those laid down by the French engineers, and put in practice in the dams of the rivers Furens and Ban ; that is to say, the intensity of the vertical pressure at the inner face of the wall should at no point exceed a certain limit when the reservoir is empty, and the intensity of the vertical pressure at the outer face of the wall should at no point exceed a certain limit when the reservoir is full.

"In the theoretical investigations of Delocre and the practical examples given by Graeff, the same limit is assigned to the intensity of the vertical pressure at both faces of the wall. But it appears to me that there are the following reasons for adopting a lower limit at the outer than at the inner face. The direction in which the pressure is exerted amongst the particles close to either face of the masonry is necessarily that of a tangent to that face ; and, unless the face is vertical, the vertical pressure found by means of the ordinary formulæ is not the whole pressure, but only its vertical component ; and the whole pressure exceeds the vertical pressure in a ratio which becomes the greater, the greater the batter or deviation of the face from the vertical. The outer face of the wall has a much greater batter than the inner face ; therefore, in order that the masonry of the outer face may not be more severely strained when the reservoir is full than that of the inner face when the reservoir is empty, a lower limit must be taken for the intensity of the vertical pressure at the outer face than at the inner face.

"In choosing limits for the intensity of the vertical pressure at the inner and outer faces of the wall represented by the accompanying profile, Fig. 6486, I have not attempted to deduce the ratio which those quantities ought to bear to each other from the theory of the distribution of stress in a solid body ; for the data on which any such theoretical determination would have to be based are too uncertain. The limits which I have chosen are as follows ;—

"Limits of vertical pressure at	inner face.	outer face.
In feet of masonry of 125 lbs. a cubic foot ..	160	125
Pounds on the square foot, nearly	20,000	15,625
Tons	8·93	6·97
Kilogrammes on the square centimètre, nearly	9·8	7·6
Feet of water	320	250
Pounds on the square inch	140	108

"In choosing these two limits I have been guided by the consideration of the following facts. As regards the inner face, where the deviation of the stress from the vertical is unimportant, it is

certain, from practical experience, that rubble masonry, laid in strong hydraulic mortar and good rock foundations, will safely bear vertical pressure equivalent to the weight of a column of masonry 160 ft. high, if not higher. As regards the outer face, the practical data given by Graeff show that masonry of the same quality, in the sloping face of a dam, will safely bear a pressure whose vertical component, as found by ordinary rules, is equivalent to the weight of a column 125 ft. high.

"The same reasons which show that the intensity of the vertical components of the pressure ought to be less for a battening than for a vertical face, show also that this intensity ought gradually to diminish at the lower part of the outer face, when the batter gradually increases. In the

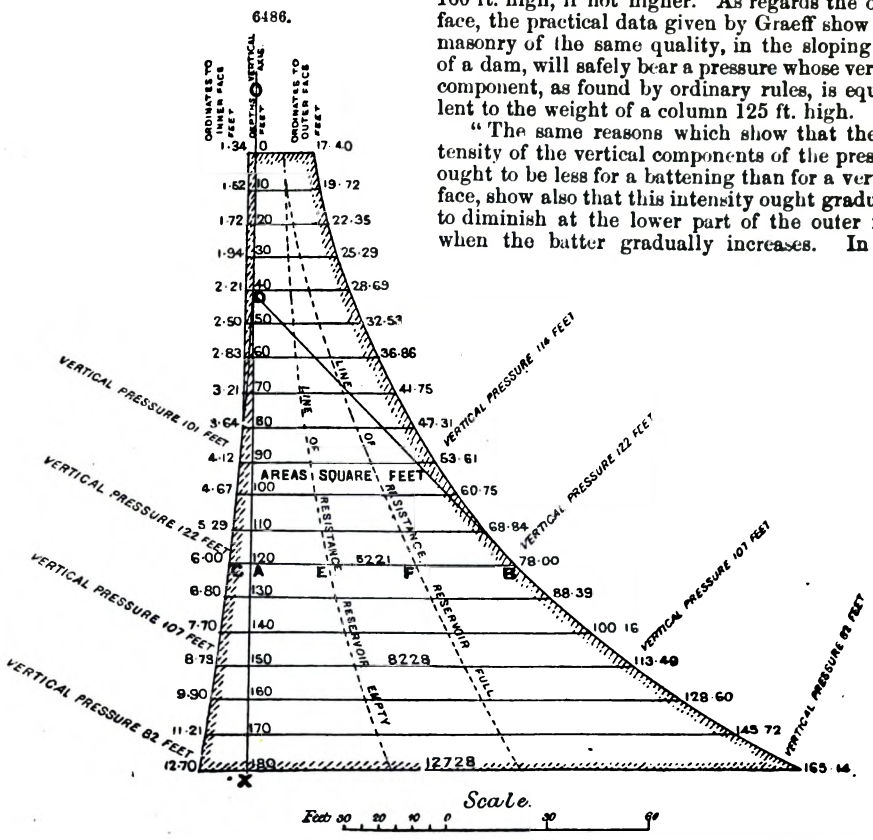

present state of our knowledge we should not be warranted in framing any definite theory as to the law which this diminution ought to follow; and therefore, in preparing the accompanying design I have thought it best to be guided in this, as in the previous case, by practical examples, and to consider it sufficient to make the law of diminution such that at the depth of 150 ft. below the surface the intensity of the vertical component of the pressure at the outer face becomes nearly equal to what it is at the same depth in the outer face of the dam across the Furens, namely, 107 ft. of masonry, or about 6½ kilogrammes on the square centimètre.

"I have kept in view another principle not referred to by the French authors, namely, that there ought to be no practically appreciable tension at any point of the masonry, whether at the outer face when the reservoir is empty, or at the inner face when the reservoir is full.

"Experience has shown that in structures of brickwork and masonry that are exposed to the overturning action of forces, which fluctuate in amount and direction, the tendency to give way first shows itself at that point at which the tension is greatest.

"In order that this principle may be fulfilled, the line of resistance should not deviate from the middle thickness of the wall to an extent materially exceeding one-sixth of the thickness. In other words, the lines of resistance when the reservoir is empty and full respectively, should both lie within, or but a small distance beyond, the middle third of the thickness of the wall.

"The conditions which have been observed in designing accompanying the profile, Fig. 6486, may be summed up as follows;—

"A the vertical pressure at the inner face, not to exceed 160 ft. of masonry, or 20,000 lbs. a square foot.

"B the vertical pressure at the outer face, 125 ft. of masonry, or 15,625 lbs. a square foot, at the point where it is most intense, and to diminish in going down from that point.

"C, the lines of resistance when the reservoir is full and empty respectively, to lie within, or near to, the middle third of the thickness of the wall.

"Those are the limiting conditions, and do not prescribe exactly any definite form.

"In choosing a form in order to fulfil them without any practically important excess in the expenditure of material beyond what is necessary, I have been guided by the consideration that a form whose dimensions, sectional area, and centre of gravity, under different circumstances, are found by short and simple calculations, is to be preferred to one of a more complex kind, when their merits in other respects are equal; and I have chosen logarithmic curves for both the inner and outer faces.

"The constant subtangent common to both curves, marked A D in Fig. 6486, is 80 ft.

"The thickness C B at 120 ft. below the top is 84 ft., and of this one-fourteenth, A C = 6 ft., lies inside the vertical axis O X, and thirteen-fourteenths, A B = 78 ft., outside that axis.

"The formula for the thickness t at any depth x below the top, is as follows;—

$$t = t_1 e^{\frac{x - x_1}{a}}, \qquad [1]$$

or in common logarithms,

$$\log. t \doteq \log. t_1 + 0{\cdot}4343 \frac{x - x_1}{a},$$

in which a denotes the subtangent, 80 ft., and t_1 the given thickness, 84 ft., at the given depth, 120 ft., below the top. The thickness at the top is 18·74 ft.

"In the profile, horizontal ordinates are drawn at every 10 ft. of depth from the top down to 180 ft., and their lengths from the vertical axis O X to the inner faces respectively, are marked in feet and decimals.

"In each case those ordinates are respectively $\frac{1}{14}$ and $\frac{13}{14}$ of the thickness. Intermediate ordinates at intervals of 5 ft. can easily be calculated, if required, by taking mean proportionals between the adjacent pairs of ordinates at the intervals of 10 ft.

"The sectional area of the wall from the top down to any given depth is found by multiplying the constant subtangent $a = 80$ ft., by the difference, $t - t_0$, between the thickness at the top and at the given depth, that is to say,

$$\int_0^x t\, dx = a(t - t_0). \qquad [2]$$

"The vertical line through the centre of gravity of the part of the wall above a given horizontal plane stands midway between the middle of the thickness at the given horizontal plane and the middle of the thickness at the top of the wall; and thus have been found points in the curve marked line of resistance, reservoir empty.

"Supposing the reservoir filled to the level of the top of the wall, the moment of the pressure exerted horizontally by the water against each unit of length of wall from the top down to a given depth x, is found by multiplying the weight of a cubic unit of water by one-sixth of the cube of the depth; and if we take, for convenience, the weight of a cubic unit of masonry as the unit of weight, and suppose the masonry to have twice the heaviness of water, this gives us, for the moment of horizontal pressure,

$$\mathrm{M} = \frac{x^3}{12}. \qquad [3]$$

"The moment of horizontal pressure, expressed as above stated, being divided by the area of cross-section above the given depth, gives the horizontal distance at the given depth between the lines of resistance with the reservoir empty and full respectively; that is to say,

$$\frac{\mathrm{M}}{\int t\, dx} = \frac{x^3}{12\, a\,(t - t_0)}, \qquad [4]$$

and thus have been found points in the curve marked line of resistance, reservoir full.

"In the preceding formulæ the pressure of the water against the inner face of the wall is treated as if it were wholly horizontal, as in the investigations of Graeff and Delocre. In fact, however, that pressure, being normal to the inner face of the wall, has a small inclination downwards; and therefore contains a small vertical component, which adds to the stability of the wall. The neglect of that vertical component is an error on the safe side.

"To find the mean intensity of the vertical pressure on a given horizontal plane in the masonry, expressed in feet of masonry, divide the sectional area by the thickness at the given plane; that is to say,

$$\int \frac{t\, dx}{t} = \left(1 - \frac{t_0}{t}\right). \qquad [5]$$

"To find the greatest intensity of that vertical pressure, according to the ordinary assumption that it is an uniformly varying stress, in other words, that it increases at an uniform rate from the face farthest from the line of resistance to the face nearest to that line, the mean intensity is to be increased by a fraction of itself expressed by the ratio which the deviation of the line of resistance from the middle of the thickness bears to one-sixth of the thickness; that is to say, let p denote that greatest intensity, expressed in feet of masonry, and r the deviation of the line of resistance from the middle of the thickness; then

$$p = a\left(1 - \frac{t_0}{t}\right)\left(1 + \frac{6\, r}{t}\right).$$

When that deviation is appreciably greater than one-sixth of the thickness, the preceding rule is no longer applicable, but this case, as already explained, ought not to occur in a reservoir wall.

"The assumption on which the rule is based, of an uniform rate of variation of that component of the pressure which is normal to the pressed surface, is known to be sensibly correct in the case of beams, and is probably very near the truth in walls of uniform or nearly uniform thickness. Whether, or to what extent, it deviates from exactness in walls of varying thickness is uncertain in the present state of our experimental knowledge.

"The range of different depths to which the same profile is applicable without any waste of

material extends from the greatest depth shown on the drawing, 180 ft., up to 110 ft., or thereabouts. For depths between 110 ft. and 80 or 90 ft. or thereabouts, the waste of material is unimportant. For depths to any considerable extent less than 90 ft., the use of a part of the same profile gives a surplus of stability. For example, if the depth be 50 ft., the quantity of material is greater than that which is necessary in the ratio of 1·4 to 1, nearly. For the shallow parts, however, at the ends of a dam that is deep in the centre, I think it preferable to use the same profile as in the deep parts, notwithstanding this expenditure of material, in order that the full advantage of the abutment against the sides of the ravine may be obtained. In the case of a dam that is less deep in the centre than 110 ft., the following rule may be employed;—construct a profile similar to that suited to a depth of 110 ft., with all the thicknesses and ordinates diminished in the same proportion with the depth. The intensity of the vertical pressure at each point will be diminished in the same proportion also; but this does not imply waste of material; the whole weight of the material being required in order that there may be no appreciable tension in any part of the wall."

Although the intricate foregoing methods are imperative in structures of unusual magnitude, in order to ensure economic and safe design, yet in ordinary structures the following more simple yet sufficiently exact process may be adopted.

Returning to the principles stated at starting, we see that if we insert in equations [1] and [1A] the limiting value of $p' = f'$, and for p its value in terms of the height of the wall, we obtain an expression for h, which may be here termed the limiting height, depending on q and w_1. Using a notation as before, we have $p' = f'$, and neglecting V in equation [2], we get $p = \frac{w_1 h}{n}$; then, by equation [1],

$$h = \frac{n f'}{w_1 (1 + 6 q)}, \text{ when } q \leqq \tfrac{1}{6}; \qquad [4]$$

and by equation [1A],

$$h = \frac{3 n f' (\frac{1}{2} - q)}{2 w_1}, \text{ when } q > \tfrac{1}{6}. \qquad [4A]$$

Applying the above formulæ to the example of rectangular profiles, and taking ordinary values for f' and w_1, corresponding to ashlar and rubble, we find for the values of q, already selected in Table A, the following limiting heights;—

In the case selected the value of n is 1; but for other forms of profile the heights will increase in the ratio of n to unity; for instance, for triangular profiles, the heights will be double, and for trapezoidal profiles, $\frac{2x}{x+t}$ times those of the Table.

TABLE B.

Values of q	0	$\frac{1}{12}$	$\frac{1}{11}$	$\frac{1}{10}$	$\frac{1}{9}$	$\frac{1}{8}$	$\frac{2}{15}$	$\frac{1}{7}$	$\frac{2}{13}$	$\frac{1}{6}$	$\frac{2}{11}$	$\frac{1}{5}$	$\frac{2}{9}$	$\frac{1}{4}$	$\frac{1}{3}$	$\frac{3}{8}$	$\frac{7}{16}$	$\frac{1}{2}$
In feet, for $\frac{f'}{w_1} = \frac{20{,}000}{140}$, or rubble walls.																		
Limiting heights ..	160	106	103	100	96	91	89	86	83	80	75	72	68	60	40	30	15	0
In feet, for $\frac{f'}{w_1} = \frac{72{,}000}{170}$, or ashlar walls.																		
Limiting heights ..	424	283	274	265	254	242	235	228	220	212	198	191	177	159	106	79	40	0

An examination of the above Table shows that for walls of ordinary heights, so long as q is kept within certain limits, there will be no danger of the maximum pressure exceeding the safe limits of the resistance of the materials of the wall, and therefore, keeping in view this principle, the true proportions of a wall may be obtained from the ordinary equations for the moment of stability of structures round the assumed limiting position of the centre of resistance.

The following is the general expression for the moment of statical stability of a structure acted upon by a force tending to overturn it, and is applicable to walls;—

Let M_1 be the moment of stability relatively to the limiting position of the centre of resistance in the base; W_1 the total weight of the structure; j the angle the plane of the base makes with the horizon; $q x$, as before, the deviation of the centre of resistance from the middle of the base; $q' x$ the horizontal deviation of the vertical through the centre of gravity of the structure from the middle of the base; $(q \pm q') x$ will therefore be the leverage by which the weight of the structure resists overthrow. Then

$$M_1 = W_1 \cos. j \, (q \pm q') x; \qquad [5]$$

or, since in uniform walls $W_1 = \frac{w_1 h x}{n}$, the equation becomes

$$M_1 = \frac{w_1 h x^2}{n} (q \pm q') x. \qquad [6]$$

The above moment being equated with the moment of the overturning thrust, leads to ordinary quadratic equations, from which the breadth of base of walls of assured stability may be readily obtained, as employed further on. In determining the value of the fraction q to be adopted, we are

guided by the circumstances of the case. We find that in retaining walls actually constructed French engineers have on the average adopted $\frac{3}{8}$ and English engineers $\frac{1}{4}$. Also, we have seen that, to avoid the existence of any tension in the masonry, we must make $q = \frac{1}{3}$; while instances may occur where, through weakness of foundations, or from other causes, it is desirable that the pressure on the base shall be equally distributed over its surface, in which case q must be equal to o. The values of the other factors of the expression will depend on the form of the profile selected, and on the physical character of the materials used in the construction of the wall.

With respect to the *frictional* stability, we know that a wall resists sliding on a horizontal plane by an effect equal to its weight, plus the vertical component of the thrust at its back, multiplied by the coefficient of friction between its material and that of the plane on which it rests; that is, if f_0 = the coefficient of friction,

$$\text{the resistance of the wall to sliding} = (W_1 + V) f_0 ; \qquad [7]$$

and if H be the horizontal thrust = P cos. ϕ,

$$\therefore \quad H \leqq (W_1 + V) f_0, \qquad [8]$$

from which equation may be determined the thickness of a wall necessary to fulfil the condition of frictional stability.

If we neglect V in the above equation, and substitute values already obtained for W and H, we have

$$x \geqq \frac{n H}{w_1 h f_0}. \qquad [9]$$

The coefficient of friction f_0 varies; for masonry on rock or other courses of masonry, from ·70 to ·75, and for masonry on earth foundations, from ·30 to ·35. The above formula takes no account of the cohesion of the mortar joints, which may amount to between 2000 and 3000 lbs. on the square foot. Taking cohesion into account, if c = the cohesion a unit of base, and allowing a factor of safety of 10, we have

$$x \geqq \frac{n H}{w_1 h f_0 + \frac{c}{10} n}. \qquad [10]$$

If, however, we omit cohesion from the consideration, it may be expressed that a wall will not slip on a horizontal plane, provided that f_0 is greater than $\frac{H}{W_1 + V}$; and this condition is found to be fulfilled in every wall, which otherwise satisfies the conditions of stable equilibrium.

The proposition that $\frac{H}{W_1 + V}$ be not greater than f_0 is also expressed by the condition that the tangent of the angle which the resultant R makes with the vertical shall be less than f_0; and this will be the case, for green masonry, when the angle made by the resultant is not greater than 36°; and in any given profile, the less the value of q, the less will be the angle made by the resultant.

Before the design for a wall can be considered complete, the test of the above principle must be applied to it; but if there should exist any doubt as to its frictional stability, it is easy to provide greater resistance by a constructive design, in which the plane of foundations and the bed-joints of the masonry have an inclination, or slope, downwards from front to rear of the wall; or otherwise, by increasing the connection between the foundations and the courses of the masonry.

Thrust of the Material retained may for the purposes of this article be confined to fluid and earth pressure.

Fluid Pressure is exerted in all directions, equally and normal, to the planes retaining the fluid. It can arise only from the weight of the particles of the fluid over the point pressed, and is therefore proportional to the number of molecules of fluid superimposed, and consequently to the depth of the point below the surface.

If A B in Fig. 6487 represent a plane retaining a fluid, the pressure at any point is shown by a line B C, perpendicular to A B, and of a length proportional to the height multiplied by the weight of the unit of volume of the fluid; and if the triangle A B C be completed, its area represents the total pressure against the plane; and its ordinates $b\,c$, $b'\,c'$ the pressure at the various points in it.

6487.

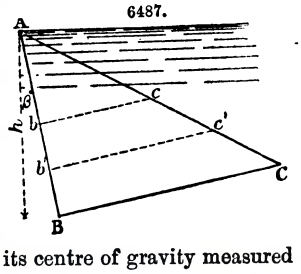

Hence the rule for fluid pressure is;—Multiply the immersed area of the plane by the depth of its centre of gravity below the surface and by the weight of the unit of volume of the fluid. This is expressed algebraically by

$$P = w A d, \qquad [11]$$

in which P is the normal pressure; w the weight of the unit of volume of the fluid; A the wetted area of the plane pressed; d the depth of its centre of gravity measured from the surface.

For water, w is equal to 62·4, therefore $P = 62{\cdot}4\ A\ d$.

And if β be the inclination of the plane to the vertical, $A = \frac{h}{\cos.\ \beta}$; therefore the general formula for water pressure in the unit of length is

$$P = \frac{62{\cdot}4\ h\ d}{\cos.\ \beta}. \qquad [12]$$

Two cases only of water pressure need be considered here.

1. When the retaining plane reaches the surface of the water, as in the case of reservoir walls, Fig. 6488. Here $d = \frac{h}{2}$, and therefore

$$P = \frac{31{\cdot}2\ h^2}{\text{cos. } \beta}. \qquad [13]$$

And if H be the horizontal and V the vertical component of P, then

$$H = P \text{ cos. } \beta = 31{\cdot}2\ h^2. \qquad [14]$$

And

$$V = P \text{ sin. } \beta = 31{\cdot}2\ h^2 \text{ tan. } \beta. \qquad [15]$$

Or, simply the weight of the triangle of water vertically over the back of the wall.

2. When the plane is submerged, as in the case of weirs, Fig. 6489.

6488.

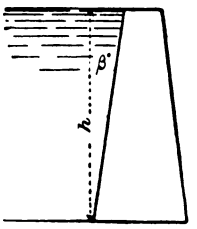

6489.

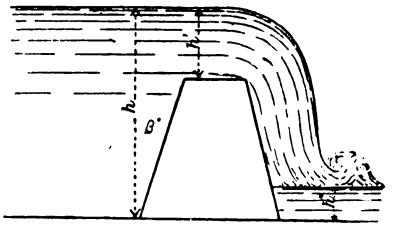

6490.

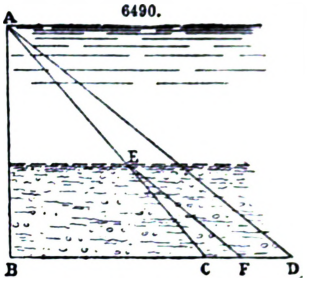

Here, $d = h' + \frac{h - h'}{2} = \frac{h + h'}{2}$; and $A = \frac{h - h'}{\text{cos. } \beta}$; therefore

$$P' = 15{\cdot}6\ \frac{h^2 - h'^2}{\text{cos. } \beta}. \qquad [16]$$

And

$$H' = 31{\cdot}2\ (h^2 - h'^2). \qquad [17]$$

$$V' = 31{\cdot}2\ (h^2 - h'^2) \text{ tan. } \beta. \qquad [18]$$

If we take a *backwater*, of the height h'', its effect, $H'' = 31{\cdot}2\ h''^2$, tends to stability.

The pressure of a fluid against the unit of surface of a plane, at any point, is $w\,h$; and the whole pressure is represented by a triangle formed by a perpendicular of this value and the height of the plane; therefore if in Fig. 6490 we let B C have the value $w\,h$ for water, and B D that for mud, the triangles A B C, A B D, will respectively represent the pressure against the plane A B in distribution and amount for these substances. For a mixed pressure of semifluid mud and water, the level of the mud being at E, draw the line E F parallel to A D, and the pressure of the mixed substances will be represented in amount and distribution by the area A B E F.

TABLE C.—WATER PRESSURE AGAINST ONE FOOT IN LENGTH OF VERTICAL WALLS.

(The Horizontal Force in lbs. = H = 31·2 h^2.)

Height of wall in feet.	Horizontal pressure in lbs.	Height of wall in feet.	Horizontal pressure in lbs.	Height of wall in feet.	Horizontal pressure in lbs.	Height of wall in feet.	Horizontal pressure in lbs.	Height of wall in feet.	Horizontal pressure in lbs.
1	31·2	31	29983·2	61	116095·2	91	258367·2	121	456799·2
2	124·8	32	31948·8	62	119932·8	92	264076·8	122	464380·3
3	280·8	33	33976·8	63	123832·8	93	269848·8	123	472024·8
4	499·2	34	36067·2	64	127795·2	94	275683·2	124	479731·2
5	780·0	35	38220·0	65	131820·0	95	281580·0	125	487500·0
6	1123·2	36	40435·2	66	135907·2	96	287539·2	126	495331·2
7	1528·8	37	42712·8	67	140056·8	97	293560·8	127	503224·8
8	1996·8	38	45052·8	68	144268·8	98	299644·8	128	511180·8
9	2527·2	39	47455·2	69	148543·2	99	305791·2	129	519199·2
10	3120·0	41	52447·2	71	157279·2	101	318271·8	131	535423·2
11	3775·2	42	55036·8	72	161740·8	102	324604·8	132	543628·8
12	4492·8	43	57688·8	73	166264·8	103	331000·8	133	551896·8
13	5272·8	44	60403·2	74	170851·2	104	337459·2	134	560227·2
14	6115·2	45	63180·0	75	175500·0	105	343980·0	135	568620·0
15	7020·0	46	66019·2	76	180211·2	106	350563·2	136	577075·2
16	7987·2	47	68920·8	77	184984·8	107	357208·8	137	585592·8
17	9016·8	48	71884·8	78	189820·8	108	363916·8	138	594272·8
18	10108·8	49	74911·2	79	194719·2	109	370687·2	139	602815·2
19	11263·2	51	81151·2	81	204703·2	111	384415·2	142	629116·8
21	13759·2	52	84364·8	82	209788·8	112	391372·8	144	646963·2
22	15100·8	53	87640·8	83	214936·8	113	398392·8	146	665059·2
23	16504·8	54	90979·2	84	220147·2	114	405475·2	148	683404·8
24	17971·2	55	94380·0	85	225420·0	115	412620·0	149	692671·2
25	19500·0	56	97843·2	86	230755·2	116	419827·2	150	702000·0
26	21091·2	57	101368·8	87	236152·8	117	427096·8		
27	22744·8	58	104956·8	88	241612·8	118	434428·8		
28	24460·8	59	108607·2	89	247135·2	119	441823·2		
29	26239·2								

Rule and Example.—To find the horizontal pressure of water against 1 ft. in length of a *vertical* wall 10 ft. high? By Table, H = 3120 lbs. If the wall *slopes* $\beta°$ at back, for the vertical element V, multiply the tabular number by the tangent of angle of slope β, and for the normal pressure N, multiply the tabular number by the secant of the angle of slope β. *Example.*—If back of above wall sloped forward 10° ∴ V = 3120 × tan. 10° = 3120 × ·176 = 549·1 lbs., and N = 1320 × sec. 10° = 3120 × 1·015 = 3166·8 lbs. To find horizontal pressure against a wall 10·6 ft. high, take that in the Table for 106 ft., and point off two decimal places, thus, pressure for 106 ft. = 350563·2 lbs., pressure for 10·6 ft. = 3505·632 lbs., for 1·06 ft. = 35·05632 lbs.

The pressure of sea-water, or mud in a semifluid state, may be obtained from equations [13] to [18], or from the Table, p. 2735, by multiplying the result for water by the specific gravity of the heavier material. The specific gravity of sea-water is about 1·026, and that of mud varies with its consistency and constitution.

The Pressure of Earth.—The accurate determination of the pressure of earth against a fixed plane is as yet involved in obscurity; but the following theory based on the investigations of Prony and Coulomb, is that which accords most closely with experience, and offers the most philosophical treatment of the subject. It agrees nearly in results with the more complicated treatment of the question by Rankine; the equations for the special cases of vertical walls being identical.

This theory is based on the principle of the inclined plane, and received laws of friction; while the assumptions made all tend to exaggerate the pressure to be provided for, and thus introduce an element of safety. The results of the deductions regarding the thickness of walls to resist the pressure found by our formula also fairly agree with the results of experience.

It is assumed that the earth is loose, and of uniform density; that the effect of cohesion is neglected; that there is no friction between the earth and the resisting plane. It is observed that where loose earth is filled in behind a fixed plane, the resistance of the plane retains the mass, but that when the plane is removed the particles of the earth slip or roll amongst each other, till the vertical through the centre of gravity of each particle makes with the perpendicular to a certain plane in the mass, an angle equal to the angle of repose, or limiting angle of friction. This angle is that which the plane called the natural slope makes with the horizontal, and its tangent is equal to the coefficient of friction.

Let A B, Fig. 6491, be a plane retaining a bank of earth. When it is removed a mass A B C will slip down. B C is the natural slope, and θ the angle of repose.

6491.

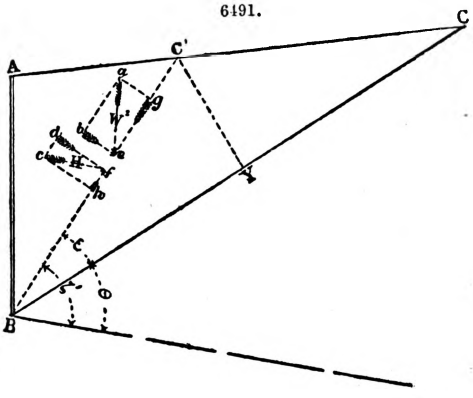

If we conceive the whole mass solidified there would be no pressure, as the component of gravity down the plane is in equilibrium with the friction between the mass and the plane B C. We must therefore consider the pressure to be produced by some smaller mass, such as A B C′ slipping down some other plane, making a greater angle, $\theta + E = i$ with the horizontal.

The horizontal pressure of any mass resting on a plane making an angle i, is obtained by resolving the forces produced by the weight of the mass A B C′ = W, and the horizontal resistance = H, in directions parallel and perpendicular to the plane B C′.

Resolving W and H in directions along, and perpendicular to, the plane, and observing that they act in opposite directions, we have $\overline{g\,e}$ representing the force down the plane = W sin. i, and $\overline{h\,f}$ representing the force up the plane = H cos. i.

The motion *down* the plane is opposed by the force (W cos. i + H sin. i) tan. θ, which is the amount of the friction developed by the normal components of H and W.

Whence, as there is supposed equilibrium, W sin. i = H cos. i + (W cos. i + H sin. i) tan. θ, multiplying by cos. θ and arranging, H (cos. i cos. θ + sin. i sin. θ) = W (sin. i cos. θ − cos. i sin. θ), therefore as $(i - \theta) = e$ we obtain

$$H = W \tan. e, \qquad [19]$$

or if w be the weight of the unit of mass (1 cub. ft.) of the earth, and A the area of the triangle A B C′, the horizontal thrust is

$$H = w\,A \tan. e. \qquad [20]$$

It can be shown by the principles of Maxima and Minima, that A tan. e will be a maximum, when the plane B C′ has such a position that the area of the triangle A B C′ formed between it and the plan A B, and that of a triangle B C′ Y, formed by it and a perpendicular C′ Y, let fall from C′ on the plane of natural slope B C, are equal; or in symbols, when $A = \frac{\overline{B\,Y} \times \overline{C'\,Y}}{2}$ and because $\overline{B\,Y} = \frac{\overline{C'\,Y}}{\tan. e}$, therefore $A = \frac{\overline{C'\,Y^2}}{2 \tan. e}$. Substituting this value for A in equation [20] we have

$$H = \frac{w\,\overline{C\,Y^2}}{2}, \qquad [21]$$

another general expression for the horizontal thrust.

The following geometrical construction, by Neville, see Fig. 6492, determines the position of the plane B C′, when A tan. e is a maximum. Let A B be the face of a bank, D C its surface,

B C the plane of natural slope. Draw B E parallel to A C, and O P at right angles to B C. Cutting A B produced if necessary. On O P describe a semicircle O H P, and from P as centre and with P H as radius describe an arc cutting O P in I, and through I draw B C' which is the plane of maximum pressure as required, making the triangles A B C' and B C' Y, Fig. 6491, equal.

The value of tan. e is

$$\text{tan. } e = \sqrt{\text{tan.}^2(\theta \mp \gamma) + \text{tan. } (\phi + e)\ \text{tan. } (\phi \mp \gamma)} - \text{tan. } (\theta \mp \gamma), \quad [22]$$

or, in a form more suitable for logarithms,

$$\text{tan. } e = \text{tan. } (\theta \mp \gamma)\left(1 - \sqrt{\frac{\text{sin. } (\phi + e + \delta)}{\text{sin. } \delta \cos. (\phi + e)}}\right). \quad [22A]$$

The sign — or + being used according as the surface A C is over or under the horizontal.

6492.

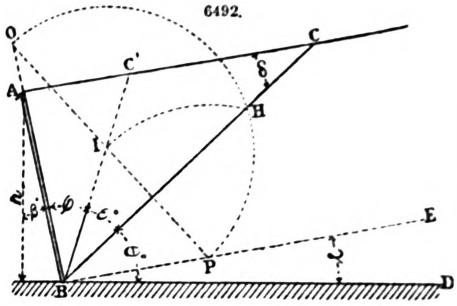

The value of $\overline{C\,Y}$ may readily be obtained by the construction, or from its trigonometric equivalent,

$$\overline{C\,Y} = \overline{A\,B}\,\frac{\text{sin. } (\phi + e + \delta)\ \text{sin. } e}{\text{sin. } (2\,\phi + e + \delta)}. \quad [23]$$

The value of A is

$$\frac{A\,B^2\ \text{sin. } \phi\ \text{sin. } (\phi + e + \delta)}{2\ \text{sin. } (2\,\phi + e + \delta)}, \quad [24]$$

and substituting these values of A and $\overline{C\,Y}$, we get a general equation for the pressure of a bank of loose earth of any face batter or surface slope, in terms of e.

$$H = w\,A\ \text{tan. } e = \frac{w\,\overline{A\,B}^2}{2} \cdot \frac{\text{sin. } \phi\ \text{sin. } (\phi + e + \delta)}{\text{sin. } (2\,\phi + e + \delta)}\ \text{tan. } e = \frac{w\,\overline{C\,Y}^2}{2} = \frac{w\,A\,B^2}{2}\,\frac{\text{sin.}^2(\phi + e + \delta)\,.\,\text{sin.}^2 e}{\text{sin.}^2(2\,\phi + e + \delta)} \quad [25]$$

The two following cases are of most frequent occurrence;—

I. When the surface of the bank *slopes up at the angle of repose*, that is to say, when the wall is indefinitely surcharged, Fig. 6493. Here $\overline{C\,Y} = \overline{A\,B}$ sin. ϕ, therefore

$$H = w\,\frac{\overline{A\,B}^2}{2}\,\text{sin.}^2\,\phi. \quad [26]$$

When the back is vertical, $\overline{A\,B} = h$, therefore

$$H = \frac{w\,h^2\,\text{cos.}^2\,\theta}{2}. \quad [27]$$

6493.

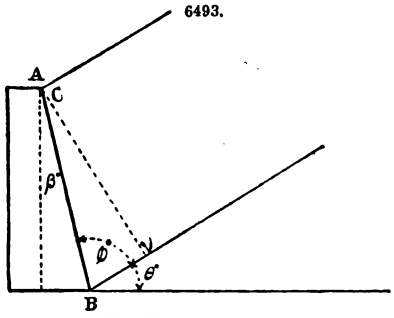

6494.

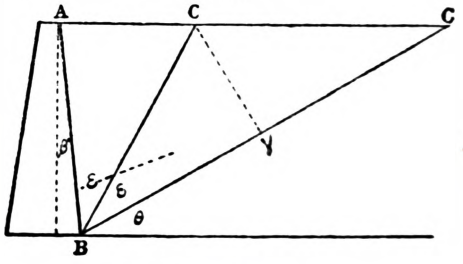

II. When the surface of the bank is *horizontal*, Fig. 6494, $\overline{C\,Y} = \overline{A\,B}\,\frac{\text{cos. } \beta\ \text{sin. } e}{\text{sin. } (\theta + e)}$, therefore

$$H = \frac{w\,\overline{A\,B}^2}{2} \cdot \frac{\text{cos.}^2\,\beta\ \text{sin.}^2\,e}{\text{sin.}^2\,(\theta + e)}. \quad [28]$$

When the back is vertical, $\overline{A\,B} = h$, and $\overline{C\,Y} = \overline{A\,C} = h$ tan. e, and $e = \phi$, therefore

$$H = \frac{w\,h^2}{2}\,.\,\text{tan.}^2\,\frac{90 - \theta}{2}. \quad [29]$$

The following Table of coefficients of $w\,h^2$ will shorten the calculation of the horizontal thrust of earthen banks against walls, in the two cases given above, for some of the usual batters, and for natural slopes of from 27° to 48°. It also shows at a glance how the pressure varies with the batter and angle of repose, and also with the slope of the surface.

Rules and Examples.—To find the horizontal pressure, acting at one-third the height, against 1 ft. in length of a retaining wall. Multiply the weight of a cubic foot of the earth by the square of the height of the wall and by the tabular coefficient for the proper inclination of the surface, angle of repose of the earth, and batter of back of wall.

Example 1.—Horizontal pressure of a bank of earth with *horizontal surface* against a wall 10 ft. high; weight of cubic foot earth = 100 lbs.; angle of repose 40°.

TABLE E.—COEFFICIENTS FOR EARTH PRESSURE AGAINST ONE FOOT IN LENGTH OF SLOPING AND VERTICAL BACKED WALLS, OBTAINED FROM FORMULÆ 28 AND 29.

Angle (θ°) of Repose.	1. Surface of Bank Horizontal.							2. Surface of Bank Sloping up at Angle of Repose.						
	Slope of Back of Wall.							Slope of Back of Wall.						
	Overhanging forwards.			Plumb.	Reclining.			Overhanging forwards.			Plumb.	Reclining.		
	14° or 1 in 4.	10° or 1 in 6.	5° or 1 in 12.	0°	5° or 1 in 12.	10° or 1 in 6.	14° or 1 in 4.	14° or 1 in 4.	10° or 1 in 6.	5° or 1 in 12.	0°	5° or 1 in 12.	10° or 1 in 6.	14° or 1 in 4.
27	·289	·252	·218	·188	·166	·141	·125	·504	·471	·433	·397	·362	·329	·302
28	·280	·244	·212	·180	·157	·133	·120	·499	·466	·427	·389	·355	·320	·293
29	·270	·236	·204	·173	·150	·129	·114	·495	·461	·421	·383	·341	·311	·284
30	·261	·228	·194	·167	·145	·124	·108	·490	·455	·414	·375	·339	·303	·275
31	·252	·220	·190	·160	·138	·117	·103	·485	·449	·407	·367	·330	·294	·265
32	·243	·213	·183	·153	·132	·111	·097	·480	·443	·400	·359	·321	·285	·256
33	·230	·204	·176	·147	·126	·106	·092	·474	·437	·393	·351	·313	·276	·247
34	·226	·197	·169	·141	·122	·101	·087	·468	·430	·386	·343	·304	·267	·240
35	·218	·190	·161	·135	·116	·095	·082	·462	·423	·378	·335	·296	·253	·228
36	·210	·183	·156	·130	·110	·090	·078	·456	·416	·370	·327	·287	·249	·219
37	·203	·174	·149	·124	·105	·087	·073	·449	·409	·362	·319	·278	·240	·210
38	·196	·170	·144	·119	·101	·083	·069	·438	·402	·355	·310	·270	·231	·201
39	·189	·164	·139	·114	·095	·077	·065	·436	·394	·341	·302	·261	·222	·192
40	·182	·157	·132	·108	·091	·074	·061	·428	·387	·339	·293	·252	·213	·183
41	·176	·151	·127	·104	·086	·069	·058	·421	·379	·333	·284	·243	·205	·174
42	·169	·146	·123	·099	·082	·066	·054	·413	·371	·321	·276	·234	·195	·166
43	·163	·139	·117	·094	·078	·062	·051	·405	·363	·313	·267	·226	·187	·157
44	·156	·135	·110	·090	·073	·057	·047	·398	·354	·304	·259	·217	·178	·152
45	·150	·129	·107	·085	·069	·054	·044	·390	·346	·296	·250	·208	·170	·141
46	·145	·124	·103	·081	·066	·051	·041	·381	·337	·287	·241	·200	·162	·130
48	·134	·113	·092	·073	·059	·045	·036	·364	·320	·270	·224	·183	·145	·117

a. When back is *vertical*, $P = w h^2 \times$ coefficient $= 100 \times \cdot 108 = 1080$ lbs.

b. When back *overhangs* 10°, that is to say, batters out towards the face 1 in 6; $P = w h^2 \times$ coefficient $= 10,000 \times \cdot 157 = 1570$ lbs.

c. When back *reclines* 10°, that is to say, batters in towards the earth 1 in 6; $P = w h^2 \times$ coefficient $= 10,000 \times \cdot 074 = 740$.

Example 2.—Horizontal pressure of a bank of earth, *surface sloping up* at angle of repose. Bank of wall *overhanging* 10°.

$w = 100$, $h = 10$, $\theta^\circ = 40^\circ$, $\beta^\circ = 10^\circ$ $\therefore P = w h^2 \times$ coefficient $= 100 \times 10^2 \times \cdot 387 = 2870$ lbs.

The Moment of the Pressure of Water or Earth tending to overturn walls is the horizontal component of the thrust multiplied by the vertical height of the point of application of its resultant over the centre of resistance of the base, and this is diminished by the vertical component multiplied by the horizontal distance of the same point from the limiting position of the centre of resistance. The point of application of the resultant of the thrust against a plane is called the *centre of pressure*, and is situated where the normal through the centre of gravity of the ideal figure, representing the pressure against the plane, cuts the plane.

Let h be the total depth of the base below the surface; h_1 the depth of the top of a submerged plane, such as a weir; the vertical height of the centre of pressure over the base is,

For planes reaching the surface,

$$z = \frac{h}{3}; \qquad [30]$$

For planes submerged,

$$z = h - \frac{2}{3}\frac{h^3 - h_1^3}{h^2 - h_1^2}. \qquad [31]$$

The horizontal distance of the centre of pressure from the centre of resistance of the base is $y = x\,(\tfrac{1}{2} + q) - \frac{r_1 h}{3}$, where $r_1 h$ is the batter of the back of the wall, and x and q as before.

If then, P be the total thrust against the wall at back, and ϕ the angle which its direction makes with the horizontal, the expression for the resulting moment is

$$M = P\,(z \cos.\,\phi - y \sin.\,\phi); \qquad [32]$$

or, if H and V be the horizontal and vertical components of P,

$$M = H z - V y. \qquad [33]$$

The Shock of a Current is an overturning thrust that may sometimes, as in weirs, have to be taken into account, in addition to the hydrostatic pressure. The pressure of a current against a plane at right angles to its direction is proportional to the area of the plane, and the height due to the velocity of the stream.

Let w be the density of the fluid; a, the area of the plane (for the unit of length a becomes h); g the force of gravity in feet, seconds; v the velocity of the current in feet, seconds. Then the theoretic force is $\frac{w\,a\,v^2}{29} = \frac{w\,a\,v^2}{64{\cdot}4}$. For water this becomes for a unit of length,

$$\cdot 969\,h\,v^2. \qquad [34]$$

According to Duchemin's experiments, the actual force against thin planes, which may be taken as weirs, in pounds a square foot, is

$$F = 1{\cdot}8\,h\,v^2. \qquad [35]$$

As it acts at the centre of gravity of the plane, therefore, $z = \frac{h}{2}$. The *moment* of this force, which must be added to the moment of the hydrostatic pressure, is therefore

$$M_0 = \frac{F\,h}{2} = 1{\cdot}9\,h^2\,v^2. \qquad [36]$$

Examples of the force of a current against 1 ft. in length of vertical planes, calculated by the above formula—[35]—are as follows;—

TABLE F.

Height of Wall.	Velocities of Current in feet a second.							
	1	2	3	4	5	6	7	8
feet.	Force (F) in lbs. to the Unit of Surface.							
1	1·8	7·2	10·8	28·8	45·0	64·8	88·2	115·2
10	18	72	108	288	450	648	882	1152
20	36	144	216	576	900	1296	1764	2304
30	54	216	324	864	1350	1944	2646	3456
40	72	288	432	1152	1800	2592	3528	4608
50	90	360	540	1440	2250	3140	4410	5760

The Thickness of Wall is found for any point by equating the moment of stability of the wall over the point, as given in equations [5] and [6], with the moment of the overturning thrust, as obtained from equations [11] to [33]; that is to say, we make $M' = M$. Thus, for uniform walls under ordinary earth or water pressure, we have

$$W_1 \cos.\, j\,(q \pm q')\,x = H\,z - V\,y. \qquad [37]$$

This expression is simplified by confining the investigation to walls on horizontal bases, and neglecting the vertical component of the thrust V, which introduces an element of safety; also assuming that the profile of the wall remains uniform, in which case $W_1 = \frac{w_1\,h\,x}{n}$, the equation between the statical resistance and the moment of the horizontal thrust becomes

$$\frac{w_1\,h\,x^2}{n}(q \pm q') = H\,z, \qquad [38]$$

whence, for retaining walls and dams, in which $z = \frac{h}{3}$, we have the general equation for the breadth of base as follows;—

$$x = \sqrt{\frac{n\,H}{3\,w_1\,(q \pm q')}}. \qquad [39]$$

For other descriptions of thrust and values of z, the same principle of equating the moments is to be adopted, and will lead to equations of a similar character; but the investigations cannot be here carried out for want of space.

The following are some of the applications of formula [39], which may be useful in practice;—

1. Vertical rectangular sections, Fig. 6495, $n = 1$; $q' = 0$;

$$\therefore\ x = \sqrt{\frac{H}{3\,w_1\,q}}. \qquad [40]$$

6495.

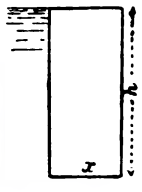

6496.

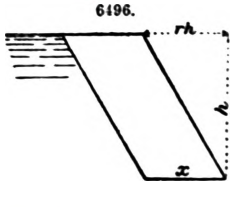

2. Reclining rhomboidal sections of uniform breadth, Fig. 6496. Let $r\,h$ be the face batter, $n = 1$, $q' = \frac{r\,h}{2\,x}$;

$$\therefore\ x = \sqrt{\frac{H}{3\,w_1\,q} + \left(\frac{r\,h}{4\,q}\right)^2} - \frac{r\,h}{4\,q}. \qquad [40A]$$

3. Reclining curved sections of uniform breadth, Fig. 6497. Approximately $n = 1$, and $q' = \frac{2\,r\,h}{3\,x}$;

$$\therefore\ x = \sqrt{\frac{H}{3\,w_1\,q} + \left(\frac{r\,h}{3\,q}\right)^2} - \frac{r\,h}{3\,q}. \qquad [40B]$$

In these two last cases, when the centre of gravity of the section is over the inner angle of the base, $q' = \frac{1}{2}$;

$$\therefore \quad x = \sqrt{\frac{H}{3 w_1 (q + \frac{1}{2})}}. \qquad [40C]$$

4. Trapezoidal sections, with a determinate *face* batter, Fig. 6498. Let t be the top breadth,

$$n = \frac{x + t}{2 x}, \quad q' = \left(\frac{r h}{3} + \frac{t - x}{6}\right) \frac{x + 2 t}{x (x + t)};$$

$$\therefore \quad x = \sqrt{\frac{2 H}{3 w_1 (q - \frac{1}{6})} - \frac{2 r h t + t^2}{3 (q - \frac{1}{6})} + \left(\frac{r h}{6 q - 1} + \frac{t}{2}\right)^2} - \left(\frac{r h}{6 q - 1} + \frac{t}{2}\right). \qquad [40D]$$

When a wall of this section is plumb *faced*, $r h = 0$;

$$\therefore \quad x = \sqrt{\frac{2 H - w_1 t^2}{2 w_1 (q - \frac{1}{6})} + \left(\frac{t}{2}\right)^2} - \frac{t}{2}. \qquad [40E]$$

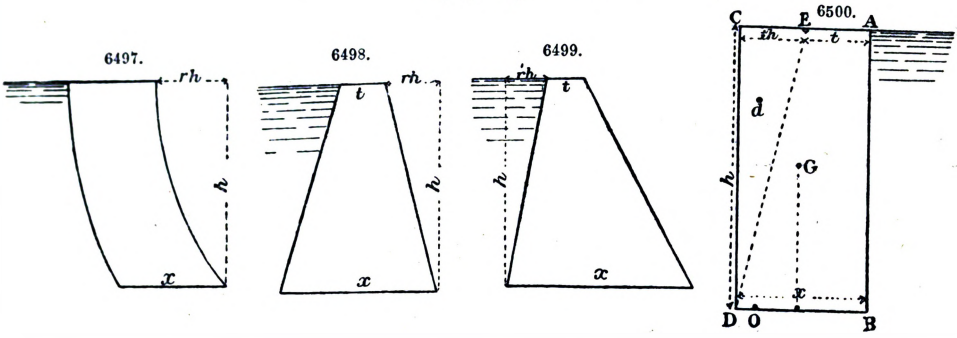

5. Trapezoidal sections, with a determinate *back* batter, Fig. 6499. Let $r' h$ be the back batter,

$$n = \frac{x + t}{2 x}, \quad q' = \left(\frac{x - t}{6} - \frac{r' h}{3}\right) \frac{x + 2 t}{x (x + t)};$$

$$\therefore \quad x = \sqrt{\frac{2 H}{3 w_1 (q + \frac{1}{6})} + \frac{2 r' h + t^2}{3 (q + \frac{1}{6})} + \left(\frac{t}{2} - \frac{r h}{6 q + 1}\right)^2} - \left(\frac{t}{2} - \frac{r h}{6 q + 1}\right). \qquad [40F]$$

When a wall of this section is plumb *backed*, $r' h = 0$;

$$\therefore \quad x = \sqrt{\frac{2 H + w_1 t^2}{3 w_1 (q + \frac{1}{6})} + \frac{t^2}{2}} - \frac{t}{2}. \qquad [40G]$$

Transformation of Profiles.—Rankine points out that a portion of the outer face of a rectangular wall may be removed without in any way influencing the statical stability of the wall, provided that the vertical let fall from the centre of gravity of the part taken away does not pass behind the centre of resistance of the wall base. This produces a trapezoidal section, and therefore economy of design.

In Fig. 6500, suppose the triangular portion C D E of a rectangular profile A B C D to be removed; then, if its centre of gravity g be vertically over O, the centre of resistance of the base, the weight of the mass C D E can have no influence on the stability of the wall, and we have a trapezoidal section A B D E of equal moment of stability, as regards the point O, with that of the rectangular section A B C D, and also of the same breadth of base.

Let $\overline{EA} = t$; $\overline{CE} = r h$; $\overline{DB} = x$; then

$$t = x - 3 x (\tfrac{1}{2} - q) = (3 q - \tfrac{1}{2}) x, \qquad [41]$$

$$r h = 3 x (\tfrac{1}{2} - q) = x - t. \qquad [42]$$

Therefore for

$q =$	$\frac{1}{6}$,	$\frac{2}{11}$,	$\frac{1}{5}$,	$\frac{2}{9}$,	$\frac{1}{4}$,	$\frac{1}{3}$,	$\frac{3}{8}$,	$\frac{7}{16}$,	$\frac{1}{2}$.
$t =$	0,	$\frac{x}{22}$,	$\frac{x}{10}$,	$\frac{x}{6}$,	$\frac{x}{4}$,	$\frac{x}{2}$,	$\frac{5}{8}x$,	$\frac{21}{16}x$,	x.
$r h =$	x,	$\frac{21}{22}x$,	$\frac{9}{10}x$,	$\frac{5}{6}x$,	$\frac{3}{4}x$,	$\frac{x}{2}$,	$\frac{3}{8}x$,	$\frac{5}{16}x$,	0.

When q is less than $\frac{1}{6}$ the rule is not applicable.

Vauban's rule for the transformation of profiles is, that a rectangular profile may be converted into one of equal stability, but with a face batter, by making the face line of the rectangle revolve on a horizontal axis at $\frac{1}{9}$ the height of the wall. This rule holds good with an error less than $\frac{1}{120}$ part, while the batter is not greater than $\frac{1}{6}$ the height and $\frac{1}{76}$ part when the batter is greater.

The Table for the thickness of retaining walls of various batters, given in Molesworth's Pocket-Book of Engineering Formulæ, is based on the above rule, combined with equations [29] and [40] of this article.

Calculations should be based on correct data, obtained in each individual case by experiment, on the materials to be retained and used in the construction; but in case of preliminary calculations or provisional design the following Tables of data, taken from various authorities, may prove useful.

TABLE G.

Materials of Construction.	Specific Gravity.	Weight of a Cubic Foot.
		lbs.
Basalts and traps	3 to 2·4	187 to 155
Bricks, red	2·16	135
„ common	1·76	110
„ stock (London)	1·84	115
Brickwork, in cement	1·92	120
„ in new mortar	1·87	117
„ old	1·52	95
„ ordinary	1·61	100
Cement, new	1·61	100
Flint masonry	2·34	148
Granites	3·05 to 2·25	190 to 141
Granite masonry	2·75	172
Limestones	2·54 to 1·86	159 to 116
Mortars, new	1·9	119
„ old	1·42	89
Sandstones	2·67 to 1·38	168 to 88
Slates	2·9 to 2·5	180 to 157

Weight of a cubic foot of ashlar masonry is about $\frac{7}{8}$ths weight of a cubic foot of the stone + $\frac{1}{8}$th weight of a cubic foot of the mortar. Weight of a cubic foot of rubble masonry is from $\frac{3}{4}$ths to $\frac{2}{3}$rds weight of a cubic foot of the stone + $\frac{1}{4}$th to $\frac{1}{3}$rd weight of a cubic foot of mortar.

TABLE H.

Materials retained by Walls.	Specific Gravity.	Weight of a Cubic Foot.	Angles of Repose.
		lbs.	°
Clay, dry	1·95	120	30 to 40
„ wet	2·17	135	15 „ 20
Earth, common dry	1·64	102	46
„ dense compact	..	..	55
Earthy clay and sand	1·5 to 1·7	97 to 106	54
Gravel	1·54 „ 1·95	96 „ 120	37
Mould, garden	1·4	70 „ 90	35 to 45
Sand, dry fine	1·37 to 1·55	84 „ 97	34 „ 40
„ damp	1·9	118	..
Shingle, loose	2·2	139	39
Water, fresh	1·0	62·4	0
„ salt	1·027	64·18	0

TABLE I.—WORKING LOADS, OR SAFE UNITS OF PRESSURE ADOPTED IN EXISTING STRUCTURES.

	Tons on the Square Foot.	Pounds on the Square Inch.
Soft rock foundations	9	140
Concrete „	3	46
Earth „	1¼	20
Ashlar masonry, limestone, Britannia Bridge	16	249
„ „ granite, Saltash Bridge	10	156
„ backed with rubble, Peniston Viaduct	6	93
Rubble masonry, sandstone in Aberthaw lime, Pont-y-Pridd	20⅔	321
„ limestone in chalk lime, Barentine Viaduct	3½	54
„ in hydraulic lime, Almanza Dam	12·8	199
„ „ Ban „	7·3	115
„ „ Furens „	6	93
„ „ Toolsee „	8·9 to 6·9	140 to 108
Brickwork, London pavior's in cement, Charing Cross Bridge	12	187
„ Staffordshire blue brick in cement, Clifton Suspension Bridge	10	156
„ red Birmingham in lias lime, Railway Viaduct	7	109
Cement mortar	20 to 32	300 to 500
Lime „	2½ „ 5¼	40 „ 80

Practical Design and Construction.—The foundations of retaining walls should be particularly secure, and especially so in walls with battering backs; because, as our theory points out, the vertical component of the pressure of the material retained adds to the pressure of the structure on its base.

In order to distribute the weight over a greater area, and also to bring the centre of the base more nearly to coincide with the centre of resistance, the masonry in the foundations is usually arranged as steps; the width increasing by a series of offsets. In all cases where the ground is soft or treacherous, care must be taken that the greatest intensity of the pressure shall not exceed the power of the strata to resist compression or displacement. In such situations the maximum of statical stability will be gained by using light materials, such as brickwork; or by adopting a form of hollow walls, as used by Rennie at Sheerness, and by making q, in the formula, as small as possible. The centre of resistance of a wall under water-pressure may be made to coincide with the centre of figure of the base by making the profile that of an isosceles triangle whose base angles are $35\frac{1}{2}°$, the breadth of base of such wall will be 1·414 times the height of wall. Unless the coefficient of friction exceeds 0·25, the weight of a cube foot of the masonry of a dam of this section must exceed 145 lbs., otherwise the wall may slide forward.

When the frictional stability is doubtful, the foundation bed must be excavated so as to incline from front to rear of the wall, thus placing the structure as it were on an inclined plane, up which it must be forced by the pressure from behind. At the same time every possible expedient should be adopted to drain and thus render solid the strata both in front and rear of the masonry; while, when the ground is obviously insecure, piling must be resorted to, the piles being driven with a rake or batter, so as to be perpendicular to the plane of the bed of the foundations; or, redan-shaped excavations may be formed in the bed so that the masonry may key itself therein.

The wall on the Birmingham, Bristol, and Thames Junction Railway, 150 ft. of which moved bodily forward 10 ft., the wall still standing, is an instance of failure from insufficient frictional stability; Vignoles considered the exciting cause to be an unexpected accumulation of water at the rear of the wall. Huntsbank wall on the river Irwell, which was forced into the water, is another instance. This wall was built of ashlar, and was 20 ft. high, $3\frac{1}{2}$ ft. thick at top, and 5 ft. thick at bottom, with counterforts.

Form of Profile.—Walls are built of numerous forms of profile or cross section, varying from the rectangular to the triangular. A triangle is that figure which is theoretically the most economical; and the nearer that practical conditions will allow of its being conformed to the better.

All other things being equal, the greater the face batter, the greater will be the stability of the wall; but considerations connected with the functions of the wall limit the full application of this condition, and walls are usually constructed with only a moderate batter on the face, the diminution towards the top being obtained by a back batter worked out in a series of offsets or steps in the masonry.

Weirs generally batter very little on the face, in order that the water may spill clear of the masonry, out of the joints of which it would be likely to wash the mortar. A very large face batter promotes the action of frost on the pointing, and also facilitates the growth of vegetation in the joints, which is often highly injurious. The filling at the back rests on the steps forming the back batter, thus adding to the stability of the wall; and if dry rubble be hand-packed over these offsets, the stability will be very nearly as great as if the wall were built up plumb at back of solid masonry. In brick walls these offsets are usually reckoned in half bricks.

A common practical rule for the form of wing wall of bridges at the back is to carry up the base thickness for one-third the height, and thence diminish off to the top breadth by offsets.

Curved forms of profile are often adopted in brick walls, and especially in walls for dock and harbour work, where practically the curved batter suits the shape of vessels lying alongside the wharfs, and it is considered to have a superiority in throwing back the crests of waves striking sea-walls. The effect of a curved profile, as in Fig. 6509, is to increase the statical stability of the wall by throwing back its centre of gravity, and this increase over a rhomboidal section with rectilineal batters is in the ratio of 4 to 3. A curved wall may possibly offer a slightly greater resistance to bulging in its lower parts; but, as Arthur Jacob has pointed out, it cannot act as an arch, having only *one* abutment; and it has little in it to counterbalance the disadvantage of being a much more expensive form to construct. The radius usually adopted for the curved face of a wall is three times the height of the wall. It will be found that if with this radius the centre of the curve be taken in the horizontal through the top of the wall, the batter of the chord of the arc will be very nearly one-sixth of the height. This good practical relation is probably the origin of the rule for the length of the radius.

The Masonry of Walls.—Where the foundations are reliable, the weightier the walls can be made the more stable they will be, so that for the masonry of well-founded walls, heavy stones, such as granite, basalt, and limestone will be preferable to brick, or the lighter stones. The action of destructive agencies, and the intensity of the pressure being greater towards the face of the wall, has led to the use of a superior class of masonry in this part, the ashlar, or block-in-course facing being backed with rubble, brick, or concrete, for the sake of economy; but such combinations must be introduced with the greatest caution and skill, so that no unequal settlement, and consequent separation of the facing and backing, shall be likely to occur. Long headers should be plentifully introduced, and the work should not be run up too rapidly. The superior class of masonry used in the facing should reach back into the wall to a sufficient distance, so that the intensity of the pressure on the masonry at the junction of the facing and backing may be well within the safe limit of resistance of the weaker materials.

The use of concrete for the interior of walls under water-pressure is common because of the greater thickness of such walls, and because of the greater density and impermeability of well-made concrete. Care should be taken in settling the proportions of the materials of the concrete that the lime shall fully occupy all the interstices of the shingle, sand, or metal used, and that it shall

possess superior hydraulic properties if it is not actually a cement. The materials for the concrete should not be too large, and it is believed that sand or a very fine gravel would produce a more dense and reliable concrete than larger stuff. It is, however, very doubtful whether good uncoursed rubble masonry, in which the stones are properly selected and fitted and carefully laid flush in mortar by skilled workmen, would not be superior to concrete on the grounds of both solidity and compactness, and such masonry has been adopted in the largest masonry dams yet constructed, and with the greatest success. The masonry in the backs of weirs and dams for a few feet above and below the range of the water-line should be of superior character, and the same may be said of the faces of wharf walls, as such parts may be exposed to the shock of waves or floating bodies.

The copings of all retaining walls should be of good heavy and large stones laid as headers, which may for wharf walls be cramped, keyed, or dowelled together. In weirs, beside the above precaution, the joints should be very close, and the crest stones should be set with a counter-slope to the direction of the current, the inner edge being rounded off to a semicircular form, which will facilitate the discharge of the water over the crest, and render the stones less liable to displacement. In brick walling the use of English bond is recommended, and half-bricks may be used as every alternate header, so as to increase the bond in the interior of the wall. In brick walls the pointing should be very carefully attended to, so as to resist the action of frost, and especially so in walls with a batter on the face.

Dams and Weirs.—These structures require special care in founding equally with other retaining walls. Water must be effectually excluded from their bases, so as to prevent waste of water, and preclude all danger of their being blown up and forced forward. The foundations of dams are sometimes connected with the rock on which they rest by large stones let, as dowels, into the rock and projecting up into the wall, or by redan-shaped hollows, excavated in the rock into which the masonry of the wall is, as it were, rooted and keyed. Through courses of masonry in dams are to be avoided as forming planes along which leaks are liable to establish themselves; and for this reason the large French dams have been built of uncoursed rubble, the finest stones being reserved for the facing. Dams and walls of reservoirs are often deprived of the water pressure at their backs, and it is therefore necessary to examine their stability under the influence of their weight alone, so that the maximum intensity of the pressure at the inner edge shall not exceed safe limits.

Fig. 6501 gives the profile of a large dam across a river near Poona, in the Bombay Presidency. It is designed by Fife to impound the river-water for irrigation and water-supply purposes.

The masonry, which is rubble stone set in mortar, made from a lime which is somewhat hydraulic, weighs about 150 lbs. a cubic foot. The stone is blue basalt, of a specific gravity of about 2·8 or 2·9. Part of this dam is used as a weir. The value of q for this structure is a little greater than one-fourth.

6501.

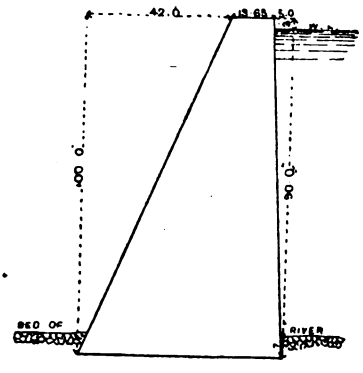

6502.

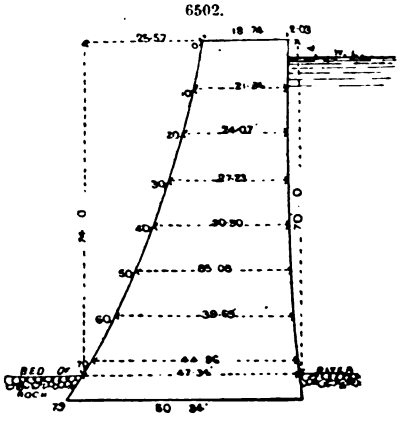

Fig. 6502 is the section of a dam at Toolsee, forming a lake for the water-supply of Bombay.

It is designed by W. J. M. Rankine, and is built of heavy basalt rubble masonry, the lower portions of the wall being set in a mortar of mixed lime and Portland cement, the rest in a mortar from the ordinary Kunker lime of Salsette. For other sections of dams, see Figs. 2247 to 2255.

Harbour, River, Dock, and Sea Walls are subject to the possibility of an infiltration of water behind the masonry, while the water in front has been withdrawn, and the walls must be made strong enough to resist water pressure. Provision must often be made for the contingency of the erection of sheds for merchandise, or even warehouses, and for the storage of heavy goods, during transhipment, on the ground behind dock and wharf walls.

Fig. 6503 is the section of the quay wall at the Dublin graving docks, by Halpin. The wall is faced and coped with granite ashlars. Counterforts, 4 ft. 6 in. by 7 ft. broad, are placed at a distance of 22 ft. from centre to centre. A puddle wall is placed along the back of the work.

Fig. 6504 is a section of the Hartlepool docks harbour wall, designed by John Rennie. Ashlar facing of stone, 2 to 3 ft. long and 15 in. high, is used. Counterforts, 4 ft. by 4 ft. broad, are at 17 ft. distance from centre to centre. The wall is backed with puddle.

Fig. 6505 is the section designed for the sea wall at Bombay, and used in the Wellington pier-works in that harbour. The wall is built of basalt rubble laid in ordinary lime and Aden pumice mortar, and faced with large stones, 2 to 3 ft. long and 12 in. high, dressed about 6 in. on beds and joints. There are no counterforts or puddle walls behind, and the foundations are con-

crete. This wall has a rather narrow margin of stability, and consequently has shown some slight signs of weakness.

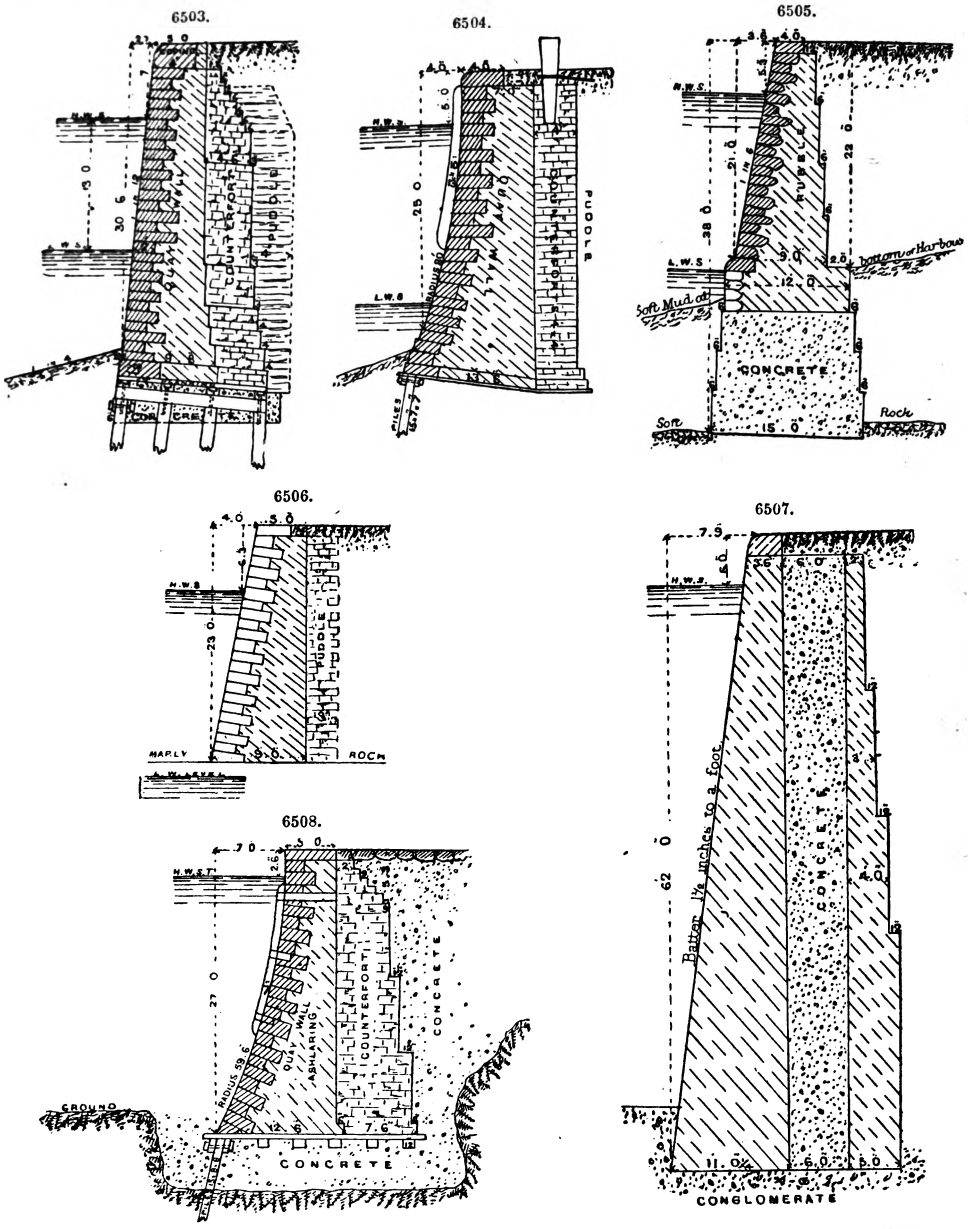

Fig. 6506 represents a wall at the Sunderland docks.

The river wall of the Bristol docks, by Brunlees, is shown by Fig. 6507. It consists of masonry facing, with a core of concrete. The rubble is of stones 12 in. on bed and 4 in. in thickness, with through stones at intervals. The wall is 109 yds. long.

Fig. 6508 is the river wall at the Grangemouth harbour, by John Macneill. It has a curved face, and the counterforts are 5 ft. broad and 24 ft. apart from centre to centre. The wall is founded on, and backed with, concrete. The following is an extract from the specifications of the work;—

"The footings to be in large sizes, the stones not less than from 4 to 5 ft. by 2 to 3 ft., and 12 in. thick, of good tough quality, squared and fair-worked breaking joint with each other.

"The wall to be carried up in courses varying from 12 to 15 in. in thickness, and the sizes to be about 3 ft. 2 in. by 2 ft. for headers, and 3 ft. by 1 ft. 6 in. for stretchers, and to be laid two stretchers to one header, and properly bonded together.

"The whole of the outer stone to be carefully selected as to quality, and to be laid on its natural or quarry bed, the upper and lower bed of every stone to carry its full thickness from front to back, so that the bearing above and below may be perfectly square and level throughout; no pinning in levelling will be allowed; each stone to be brought firmly to its bed by a wooden mallet. The top

course of stone to wall forming the curb, to be of good whinstone, and to be 12 in. thick, in large sizes, and rounded on the edge, and to be placed round the whole width of wall, and well joggled together. All masonry to be worked with chisel drafts round their faces, beds, joints, and backs, and to be picked between the drafts, so that upon applying a ruler upon the face no part shall be above them, and no more space than $\frac{1}{8}$ in. below them; the outside face being worked with exact regularity and neatness. The whole of the stonework is to be laid throughout on a thick bed of mortar of the following description;—1 measure of good stone lime, 1 measure of pozzolana, 2 measures of sharp clean sand free from rubbish, dirt, and other impurities."

Fig. 6509 is the river wall at Chatham, an example of a brick wall with curved outlines. The counterforts are square and are 15 ft. apart.

Fig. 6510 is the wall of the pier head, built by the Board of Works, at Kingstown, Dublin.

The masonry is of heavy granite blocks, and the wall is backed with hand-set rubble, laid without mortar.

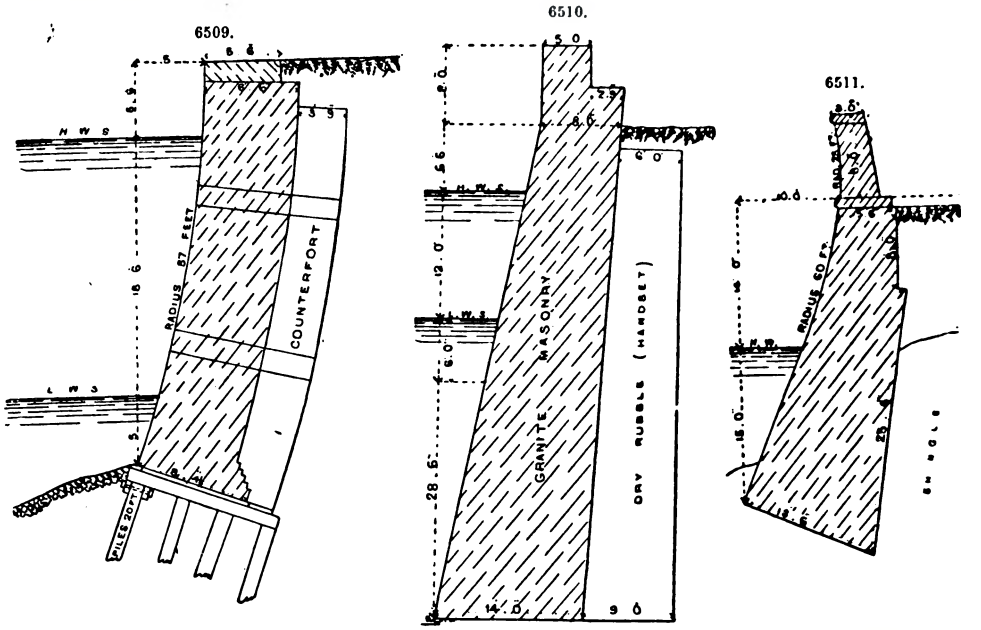

Fig. 6511 is the section of the sea wall at Penmaen Maur, by Robert Stephenson. The facing is of limestone ashlars, set in cement, for 18 in. inwards from the face. This section was adopted after failures.

Retaining Walls and Revetments.—When springs occur behind or below the wall they must be carried away by piping or culverts, and thus got rid of. The masonry at the back of the wall should be left as rough as possible, so as to increase thereby the friction of the earth against it.

Weepers, or rectangular holes about 2 in. wide, are left in the masonry, so as to permit the free escape of any water which may find its way to the back of the wall. In order to secure the more perfect action of these weepers it is usual to place permeable materials, such as shivers and refuse stone, or other waste of the building, or even coarse gravel, in a vertical layer behind the wall. This arrangement avoids the possibility of water pressure at the back, and may, by the extra weight resting on the offsets at the rear, add to the stability of the wall. The angle of repose of the earth filling may be increased, and therefore the thrust reduced by packing it in counter-sloping layers of about 1 ft. in thickness. When the stuff at the back of a wall cannot be thoroughly drained, or when it partakes of the nature of mud, or quicksand, the wall must be designed to resist water pressure, or rather the pressure of a fluid of the density of mud and water combined. An economical method of relieving a wall of such pressure is to tip behind it a bank of sound material, extending as far back as the end of the plane of natural slope; or to build a dry-stone bank between the masonry and the treacherous material.

The thickness of a surcharged wall of vertical rectangular section is obtained from the following formula;—

Let h be the height of wall; c the height of surcharge; x the thickness of a similar wall to sustain a horizontal topped bank of height h; x' the thickness of a similar wall to sustain a bank with an indefinitely long slope or indefinite surcharge, as calculated by equation [25]; then the thickness of required wall, $x_2 = \dfrac{h\,x + 2\,c\,x'}{h + 2\,c}$.

The section adopted for brick walls on the London and Birmingham Railway is shown in Fig. 6512. The counterforts are $4\frac{1}{2}$ ft. wide, and placed at intervals of 20 ft. Pilasters also break forward one-half a brick on the face. The earth at the back was rammed in layers of 1 ft., extending to 6 ft. backwards. These walls began to fail in some instances when the strata sloped down towards the wall, and were supported as shown in the figure by dotted lines; the upper struts being cast-iron ribs, the lower timber balks, extending to the walls on the opposite side of the cutting.

Fig. 6513 is the section of a retaining wall on the Dublin and Kingstown Railway.

Fig. 6514 is the section of a dry-stone retaining wall, adopted on an Indian ghaut road. The stone is heavy basalt, carefully selected, and set with chip primings.

An example of a surcharged retaining wall is shown in Fig. 6515. The wall is used to support the face of a cutting on the Dublin and Kingstown Railway.

6512.

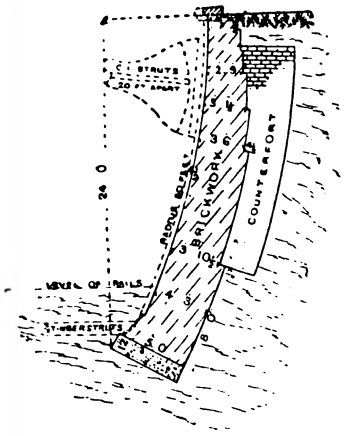

6513.

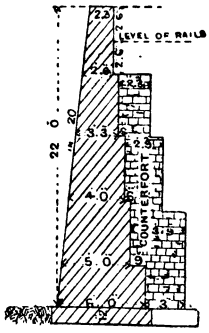

6514.

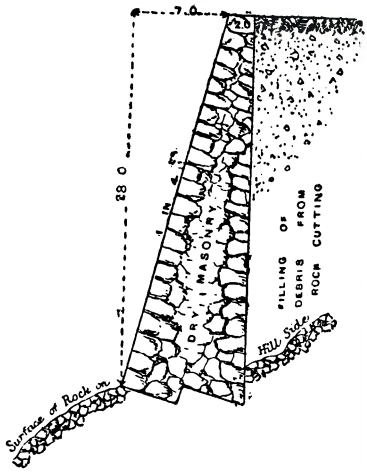

6515.

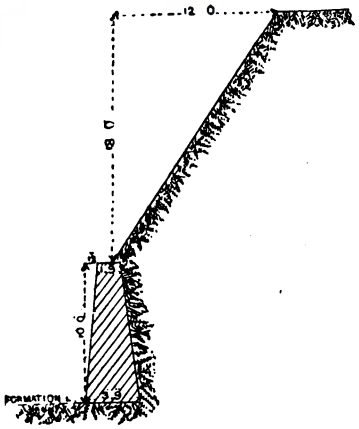

6516.

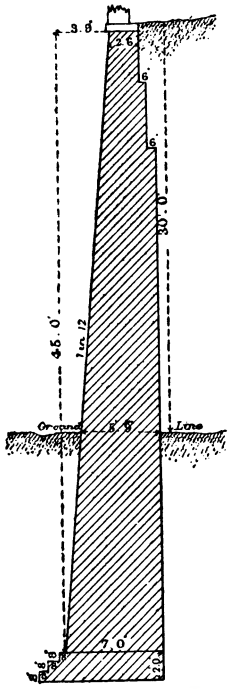

6517.

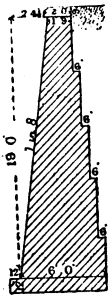

6518.

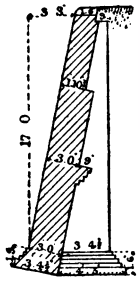

Fig. 6516 is the section of a returned wing wall, that is, a wing carried back into the embankments in a line with the face of the bridge, on the Clydach Valley Railway. A wing wall of this class does not receive the thrust of the whole prism of earth behind, owing to the nearness of the opposite wall, and it is also strengthened by the slope of the embankment which lies outside it.

Fig. 6517 is the section of an ordinary stone wing wall from an example of a bridge on the Great Southern and Western Railway, Ireland.

Fig. 6518 is the section of a brick wing wall. A peculiarity noticeable in this wall is the shelf placed behind to catch the pressure of the earth. The counterforts are 1′ 9″ broad, and are placed 6 ft. 9 in. apart from centre to centre.

Counterforts are projections of the masonry of the back of the wall, occurring at intervals of from 10 to 20 ft. They are generally rectangular in plan and elevation, but they occasionally may be trapezoidal. Counterforts act by their weight in increasing the stability of walls, and as they may be considered to hang on at the back, the bond at their junction with the wall must be carefully attended to, and long headers, with hoop iron in the upper courses, should be used to bind them to the wall. Provided this is attended to, the masonry of the counterfort itself may be of the most economical character. The security, therefore, of their foundations is a matter of secondary importance, as counterforts should be made to depend for support chiefly on their cohesion to the wall. This principle we see frequently carried out in practice at the rear of the abutments of railway bridges, where the foundations of counterforts are placed almost on the surface of the ground under the embankments. In order that the moment of the weight may have the greatest value, counterforts should not receive any batter.

Long thin counterforts are considered to act advantageously by breaking up the pressure of the earth; and Hope conceived that a wall might become a mere shell, exposed to hardly any pressure if the earth were supported by its friction against the sides of long, but thin and frequent, counterforts. The extension of this principle is the introduction of relieving arches, described farther on.

Counterforts are especially useful for military works, where they limit the destructive effect of projectiles to those panels of the wall actually struck. The spacing of counterforts is usually determined by the practice of engineers, which makes it about three times the thickness of the wall between; or, it may be obtained by solving the equation for the stability of a counterforted wall in terms of L for an assumed breadth of wall and given dimensions of counterforts.

Rondelet gives a rule for the dimensions of counterforts that they should have the same length of face c, as the breadth of the wall, and their projection should be twice this dimension. In other words, $c = x_1$ and $z = 2\,x_1$. The stability of a counterforted wall is calculated by taking the sum of the moments of both the panelled and the counterforted portions of the wall round the respective limits of deviation of the resultant from the centre of the base, just as in uniform walls, and dividing the sum by the length of wall. In Figs. 6519, 6520, let L be the length of wall between the counterforts; c the length of one counterfort along the line of the wall; z the thickness of the counterfort perpendicular to the face of the wall; x_1 the thickness of the wall independently of the counterforts.

Then $$w_1 h \{ \mathrm{L}\, q\, x^2 + c\,(x+z).q\,(x+z) \} = \frac{\mathrm{H}\,h}{3}(\mathrm{L}+c).$$

$$x_1 = \sqrt{\frac{\mathrm{H}}{3\,w_1\,q} - \frac{c\,z^2}{\mathrm{L}+c} + \left(\frac{c\,z}{\mathrm{L}+c}\right)^2} - \frac{c\,z}{\mathrm{L}+c}, \qquad [43]$$

and

$$z = \sqrt{\left(\frac{\mathrm{H}-x^2}{3\,w_1\,q}\right)\left(\frac{\mathrm{L}+c}{c}\right) + x^2} - x. \qquad [44]$$

The unit of length is here L + c instead of 1 ft. as in all other cases.

There is always a small saving by the use of counterforts instead of a plain wall of uniform section, the ratio of the quantity of masonry in the former and the latter being $\mathrm{L}\,x_1 + c\,(x_1 + z) : (\mathrm{L}+c)\,x$ when x is the thickness of the uniform wall.

6519.

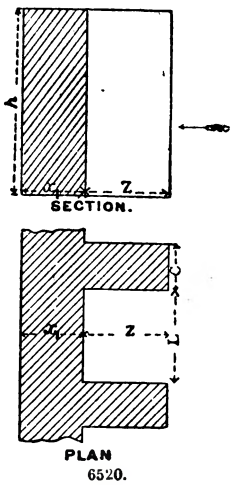

6520.

6521.

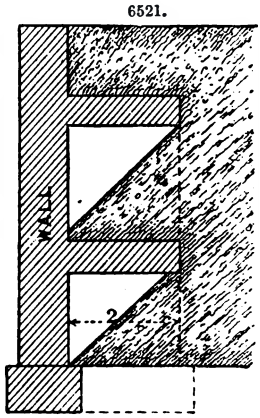

6522.

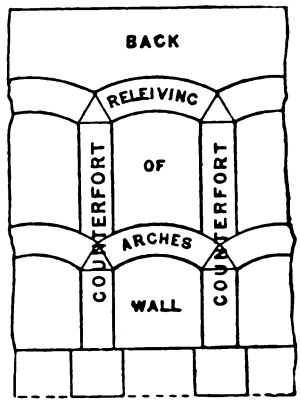

Relieving Arches are sometimes built on the counterforts, as piers. Their object is to carry the whole of the superincumbent filling, so that none of the earth pressure may come on the wall, which therefore becomes a mere shell blocking up the faces of the arches. The arches may be in one or more tiers, the length being regulated so that the natural slope of the earth touching the crown of the intrados of the arches shall not cut the back of the wall, over the extrados of the arches in the next tier below. Fig. 6521 represents a section of such wall with two tiers of arches. Fig. 6522 shows the back view of same.

To compute the length of the arches and counterforts, let d be the depth of the crown of the arch below the surface, h_3 its clear height, θ the angle of repose of the earth; then, approximately, the length is

$$z = \text{cotan. } \theta\left(h_3 + \frac{d}{(1+\text{sin. }\theta)^2}\right), \qquad [45]$$

and

$$h_3 = z \tan.\,\theta - \frac{d}{(1+\text{sin. }\theta)^2}. \qquad [46]$$

In soft ground the bases of the counterforts may be connected by inverted arches.

Buttresses differ from counterforts in that they are projections placed in front of the wall, and

act by increasing the leverage of the wall. The whole mass tends to turn over the outer edge of the buttresses; therefore the intensity of the pressure throughout their substance is very great; and consequently their foundations should be made very secure, and should present as well the greatest possible resistance to compressibility. The foundation beds, as well as the coursing planes, should be at right angles to the resultant pressure. The masonry should be of the best description, and the form should be triangular, the bond at the junction with the wall being well secured.

Buttresses are more economical than counterforts, but they can only be used where there is a free space in front of the wall, and where the question of space or value of land presents no difficulty. They are also inapplicable in quay and river walls, where face projections would be inconvenient and dangerous to vessels.

The stability of a buttressed wall is thus calculated;—Let L, Figs. 6524, 6525, be the length of wall between buttresses; c the length of buttress along its face; z its thickness or projection from the face; x_2 the thickness of wall. Then for a vertical rectangular section of wall, with triangular buttresses, if the moment be taken round a deviation $q\,z$ from the centre of z,

$$w_1 h\left\{(\mathrm{L}+c)\,x_2\left(\frac{x_2}{2}+\frac{z}{2}+q\,z\right)+\frac{c\,z}{2}\left(\frac{z}{6}+q\,z\right)\right\}=\frac{\mathrm{H}\,h}{3}(\mathrm{L}+c).$$

$$\therefore\quad x_2=\sqrt{\frac{2}{3}\frac{\mathrm{H}}{w_1}-\frac{1+6q}{6}\cdot\frac{c\,z^2}{\mathrm{L}+c}+(q+\tfrac{1}{2})\,z\Big|^2}-(q+\tfrac{1}{2})\,z,\quad[47]$$

and

$$z=\sqrt{\frac{4\,\mathrm{H}(\mathrm{L}+c)}{3\,w_1(1+6q)}-\frac{6\,x^2(\mathrm{L}+c)}{(1+6q)c}+\left\{\frac{3+6q}{1+6q}\left(\frac{\mathrm{L}+c}{c}\right)\right\}^2}-\frac{3+6q}{1+6q}\,\frac{\mathrm{L}+c}{c}.\quad[48]$$

If the buttresses are placed close together, the panel between may be formed by an arch of only a couple of feet in thickness, and of small versed sine. Retaining walls have been so constructed on the Metropolitan railways, Fig. 6523.

The stability of such a structure, Figs. 6524, 6525, may be calculated by the same formula as that used for a buttressed wall without much error; and if the weight of the arch be neglected, the following simple formula may be used for rectangular buttresses; $w_1\,z\,h\,c\,q\,z=\frac{\mathrm{H}\,h}{3}(\mathrm{L}+c)$,

$$\therefore\quad z=\sqrt{\frac{\mathrm{H}}{3\,w_1\,q}\cdot\frac{\mathrm{L}+c}{c}}.$$

For triangular buttresses;—

$$z=\sqrt{\frac{4\,\mathrm{H}}{w_1(1+6q)}\cdot\frac{\mathrm{L}+c}{c}}.$$

If the weight of the arch is taken into account, the formulæ [47] and [48] may be used without appreciable error.

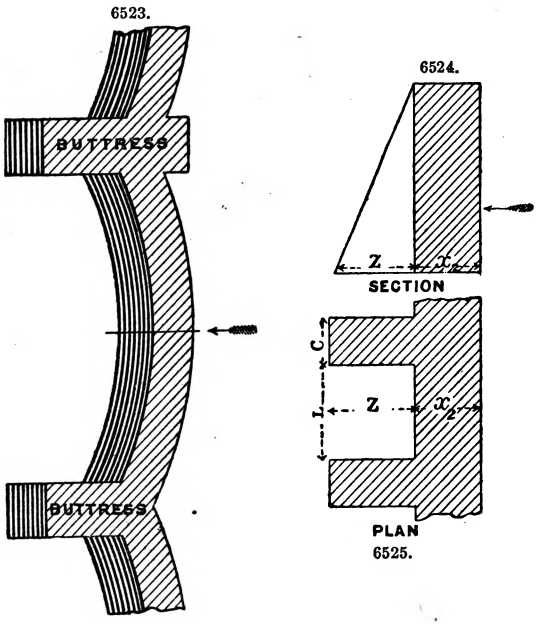

Land-ties and Struts are of the nature of artificial counterforts and buttresses, and have been adopted as a supplementary measure to strengthen walls which have shown symptoms of failure.

Land-ties act as anchors at the backs of walls, and consist of iron bolts passing through the masonry, and attached to the centre of pressure of large iron plates imbedded in the solid earth behind the wall, the pressure being distributed over the face of the wall by broad washers.

When intended entirely to resist the sliding of the wall, land-ties are fastened at one-third the height of the wall; but if the sliding is to be resisted equally by ties and the foundations, they should be placed at two-thirds the height above the base. Their position is therefore indicated by the symptoms of failure observed.

The following represents the holding power of land-ties;—Let W be the weight of a cubic foot of the earth; θ the angle of repose; d_1 and d respectively the depth of the upper and lower edges of the plate below the surface; R the holding power in pounds a foot in breadth of plate, $= \mathrm{W}\frac{d^2-d^2}{2}\cdot\frac{4\sin.\,\theta}{\cos.\,2\,\theta}$, and the position of the centre of pressure of the plates at which point the rods should be attached, is $\frac{2}{3}\frac{d^3-d_1^3}{d^2-d_1^2}$, measured from the surface of the ground.

Struts, either of masonry or cast iron, may be used to prevent a wall from coming forward. They may abut against a mass of masonry sunk in the ground in front of the wall, or if in cuttings, against the opposite wall. Those strutting the foundations may take the form of inverted arches, while the upper parts of the wall may be held apart by arched ribs of large curvature, springing at a point two-thirds of the height from the base. The expediency of adopting this method of adding to the stability of a wall as a primary design, should be determined by the cost of such

work considered in relation to the value of the land adjoining. Hoskins proposed brick arches below and above, the upper strut arch having an inverted arch over it to keep it down at the crown; and he shows in a paper read at the Institution of Civil Engineers that for a double line of railway of 4 ft. 8½ in. gauge, in 65-ft. cutting, the arrangement he proposed would save nearly one-third the cost. The principle of masonry arched struts was introduced by A. J. Adie in the Chorley cutting, on the Bolton and Preston Railway, where, in a 60-ft. sand cutting, he used walls 20 ft. high, one-fifth the height as breadth at base, a batter of 2 ft., and buttresses 2 ft. 6 in., with rubble strut arches at 16½ ft. intervals. Cast-iron arched struts braced at the crown were used to support the failing walls on the London and North-Western Railway, and were adopted in the original construction of the retaining walls of the London Metropolitan Railway where the line passes through deep open cuttings.

See DAM. HARBOUR. MASONRY.

Books on Retaining Walls;—Moseley's 'Mechanics of Engineering and Architecture.' Weisbach's 'Principles of Mechanics.' Mahon, 'Civil Engineering,' by Barlow. Rankine's 'Civil Engineering and Applied Mechanics.' Scheffler, 'Traite de Stabilité des Constructions.' Murray's 'Treatise on the Stability of Retaining Walls.' Neville's paper in vol. 1 of 'Transactions C. E. Inst., Ireland.' Jacob (A.), 'Practical Designing of Retaining Walls.' Dempsey's 'Practical Railway Engineer.' Professional papers of Indian Engineering—papers therein on Retaining Walls, by J. H. E. Hart, and others.

RIVERS. FR., *Rivières*; GER., *Flüsse*; ITAL., *Fiume*; SPAN., *Rios*.

Rivers are natural water-courses which drain the tracts of country through which they flow. Hence their magnitude depends on the extent of the basin which they drain; and the volume of water which they discharge at any given time varies with the amount of rainfall immediately preceding that time. In this they differ from canals, which, being supplied with water chiefly by artificial means, preserve a nearly constant volume. Rivers differ from canals also in being of irregular section and varying inclination; and as their course has been determined by the action of their own water constantly tending to a lower level under the influence of gravity, it presents a continual succession of sinuosities and other irregular features which do not exist in canals. Moreover, as many of them discharge directly into the sea, they may be exposed to tidal influences in those portions which are in immediate proximity thereto.

From an engineering point of view a river consists of two distinct portions, the upper, or river proper, and the lower, or tidal portion; for the works required for the improvement and conservation of each of these divisions are of a totally distinct character. In the river proper, these works consist chiefly of embankments for protecting the adjacent lands from floods, of piling, walling, and other means for protecting the banks from the corroding action of the stream, and of weirs thrown across the stream for the purpose of forming stretches of canal, with cuts and locks to connect the different reaches. In the tidal portion the works are of a more varied and extensive character, and consist in widening and deepening the bed, and in straightening the course of the river, in the removal of bars and shoals, and the construction of walls to guide the tidal current, and in the formation of new cuts, and the closing of subsidiary channels. We shall treat these divisions separately, and shall consider first the upper portion or river proper. Before any engineering work connected with rivers can be designed and the cost estimated, it is necessary to possess full and accurate data respecting the velocity and the discharge of the river in question, the form and nature of its bed and banks, its slope and width, with various other information bearing on the subject, especially that to be derived from tidal observations. These data can be acquired only by means of careful and minute surveys, soundings, probings, and borings, and an extended series of observations on the influence of tides and floods. We shall therefore consider briefly these means of obtaining the necessary preliminary information before entering on the subject of the works themselves, omitting, however, the details of triangulation and determining of base lines for the purpose of obtaining the plan of a river. These matters belong to surveying in general, and they will be more appropriately treated of in another place.

In the tidal portion of a river the level of the water is constantly changing. If this change of level were uniform and showed itself simultaneously throughout the whole of the tidal portion, that is, if the level rose or fell to the same degree at every point at the same instant, a very limited series of observations would be sufficient to enable us to determine accurately the form, inclination, and character of the bed of a river, with other data necessary to the designing and executing of engineering works. Such, however, is far from being the case, and any estimates made on that assumption would be liable to serious error. When the level at the mouth of a river begins to rise in consequence of the returning tide, it does not immediately influence the descending stream above; the latter continues for some time to descend with the same velocity as when the level at the mouth was at its lowest point, and this velocity is checked only gradually from the mouth upwards. The consequence is that near the mouth of the river the water becomes heaped up, being held above its natural level by the dynamic force of the descending stream. As this force is gradually overcome the elevated level ascends the river. But before it has reached a very considerable distance up the stream, the tide again recedes from the mouth and the water there heaped up flows out to sea, thus producing a declivity in the opposite direction. In this way, in very large rivers, there may be several tides in the river at one time, as in the Amazon, for example. But in the comparatively small rivers of Europe, we shall hardly find the influence of more than one tide. If the above were the only disturbing agencies, we should still have some degree of regularity and uniformity that would enable us to determine from the ascertained influences at work in one river the character and extent of those in another. Other agencies, however, do exist, and they often exert a powerfully disturbing influence. These are chiefly sudden widenings and contractions of the stream and abrupt turns, and the form and extent of the mouth which receives the tidal wave. As no two rivers are alike in these respects, it is necessary to make in every case an extended series of observations in order to determine accurately the degree of tidal influence at any given point.

As an illustration of the preceding remarks we give an example from Stevenson. The observa-

tions made by him on the river Dee, between Flint and Chester, a distance of eleven miles, show conclusively the existence of the elevated level and the necessity for accurately ascertaining the form and position of the tidal lines. Fig. 6526 shows the height of the tide at Flint, Connah's Quay, and Chester at a given time. The full lines are those which were ascertained by observation; the dotted lines indicate the probable direction when, for want of additional stations, they could not be certainly determined.

6526.

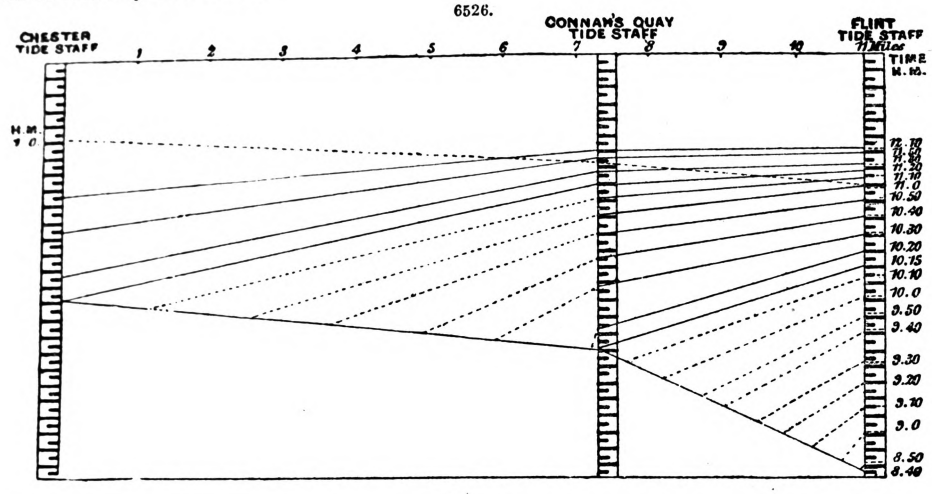

6527.

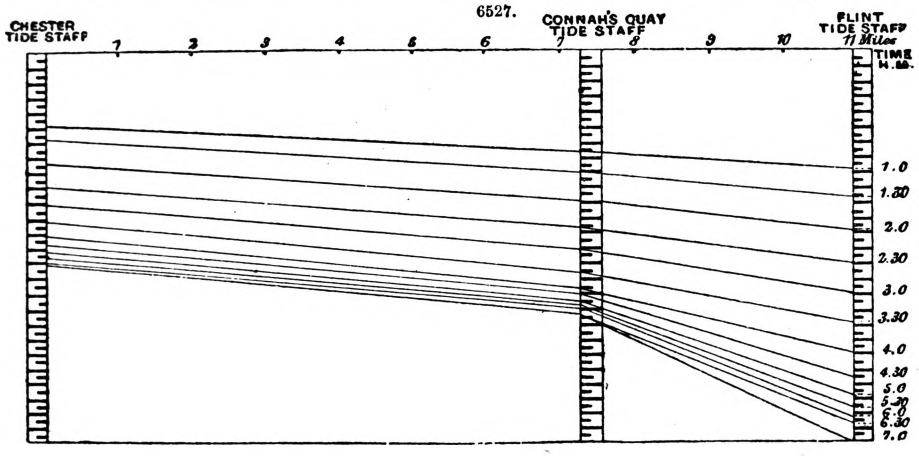

6528.

The tide, as will be seen from the figure, began to rise at Flint at 8 hours 40 minutes; at 10 hours 15 minutes it had risen 12 ft. 8 in., and at that time had just appeared at Connah's Quay, the surface of the water at Flint being 5 ft. 4 in. above that at Connah's Quay. At 11 hours 20 minutes the tide had risen 18 ft. 4 in. at Flint, and was one foot above the level of the water at Connah's Quay, and 7 ft. 10 in. above that at Chester, where the tide had just begun to appear. Thus, while at low water there is a fall of 11 ft. from Chester to Flint, there was, at the time above mentioned, a fall of no less than 7 ft. 10 in. on the surface of the water from Flint to Chester. At 12 hours 10 minutes it was high water at Flint, and at that time there was a fall of 1 ft. 7 in. to Chester; but the high water at Chester did not occur till one o'clock, by which time the water at Flint had fallen 2 ft. 2 in., and the fall on the surface of the water from Chester to Flint was 3 ft. 1 in. Fig. 6527 shows the lines of ebb tide on the same day. It will be seen by referring to this figure that the water subsides gradually, and that the tidal lines approach much more nearly to parallelism and horizontality than during flood tide. The upper lines of these figures correspond with the tidal line when it is high water at Chester.

These facts show the necessity of carefully observing the effects of the tide previous to undertaking soundings and borings in the tidal portion of a river. A simple and effective mode of conducting these observations is to erect at proper intervals throughout the portion to be surveyed a number of tide-gauges similar to that shown in Fig. 6528. These are merely 1½-in. planks, from 5 to 7 in. broad, and graduated to feet, halves and quarters. A more minute division would only prove embarrassing to the observer, especially when the gauge is situate some distance from the bank. Considerable judgment is required to select proper stations for these gauges. Disturbing influences, such as enlargements and contractions of the streams, bends, inequalities of bed, and exposure to the action of the wind must be considered and the gauge placed so as to detect and correct them. In selecting a station, care should be taken to place the gauge in a conspicuous position, that is, with a bank, quay, wall, or other structure as a back-ground, so that the divisions may be clearly seen. Of course, the greater the number of stations, the more correct will the result of the observations be; but it is hardly practicable to multiply them beyond a very limited

number, by reason of the difficulty of obtaining and superintending a large number of men to make the observations. For it is evident that unless the work is carefully performed and precautions taken to correct variations of time among the numerous observers, the results must be erroneous. For this reason, it is better to have only a few well-selected stations, and to make the soundings during the ebb when, as the example quoted above shows, the lines are more nearly parallel. The observations should extend over a period of twelve hours at least, and they should be taken every ten minutes, and entered in a book provided for that purpose. When a sufficient number of observations have been made, it only remains to ascertain the relative levels of the gauges. This is an ordinary levelling operation, but it requires great care, and, to avoid error, should be performed at least twice.

We shall now show how these tide-gauges are made use of to correct the depths of the soundings. The datum line to which the depths are reduced is usually that of high water of an ordinary spring tide. Let D be the height of this line upon the gauge. Suppose now a sounding taken near the gauge, and let d be the depth of that sounding. If H be the height of the water upon the gauge at the time when the sounding is taken, the corrected or reduced depth $\delta = d + (D - H)$. When H exceeds D, which may happen in the case of an equinoctial tide, the formula becomes $\delta = d + (H - D)$. This formula gives true results for depths near the gauges, but might lead to considerable error in those at a distance from the gauge, in consequence of the tidal lines not being parallel to the line of high water. The obvious remedy for this is to increase the number of gauges; but as we have already pointed out, there exist difficulties which render this impracticable. The only means of avoiding a liability to error in this respect is to take the soundings during the ebb when, as the above example shows, the tidal lines are most nearly parallel to high water.

The method of taking the soundings is very simple, but it demands great care on the part of the operators, as slight errors of observation may occasion serious errors in the protraction of the work. To perform the operation satisfactorily, a boat is requisite, manned by three men, two to row the boat, and the third to steer her straight across by keeping two objects on the opposite bank in line. One observer is then free to take the soundings, and the other to observe the angles for the purpose of fixing the positions and to register the soundings. When the depths do not exceed 10 ft., a light iron rod is preferable to a line to sound with; it should be graduated in the same way as the tide-gauge described above. The soundings should be taken in straight lines across the river, the distance of the soundings apart as well as that of the lines of soundings, being determined by the degree of accuracy required. It is, however, in all cases desirable to take them more frequently in the low-water bed of the river than between that and the shore, as this gives the greatest navigable depths, shows the rise of the tide, and is required in the longitudinal section. Sextant observations are requisite to fix the positions of the lines of soundings. When the river is narrow, it will be sufficient to fix the extremities only; but in broad estuaries, several observations will be required along each line. The mode of registering the observations and soundings in the field-book is as follows;—

Stations.	Angles.	Time.	Depth.	Height of Tide on A Tide-gauge.	Reduced Depths.	Remarks.
	deg. min.	h. m.	ft. in.	ft. in.	ft. in.	Datum high water on A tide-gauge 3 ft. 10 in.
Station X	113 17					
Station Y	68 8	9 20	1 5	3 1	2 2	Rock bottom.
Station Z	43 27					
		9 25	3 0	3 1	3 9	,,
		9 31	3 9	3 0	4 7	,,
		9 36	4 2	3 0	5 0	,,
		9 41	4 10	2 11	5 9	,,
		9 47	6 9	2 10	7 9	,,
		9 52	7 1	2 10	8 1	,,
		9 57	6 8	2 9	7 9	,,
		10 3	9 1	2 8	10 3	,,
		10 9	10 7	2 8	11 9	Gravel.
		10 17	10 8	2 7	11 11	,,
		10 24	11 0	2 6	12 4	,,
		10 31	10 11	2 5	12 4	,,
		10 37	10 6	2 5	11 11	,,
		10 45	10 3	2 4	11 9	,,
		10 51	10 2	2 3	11 9	,,
		10 58	9 11	2 2	11 7	,,
		11 4	9 0	2 1	10 9	,,
		11 12	8 3	2 0	10 1	,,
		11 18	6 4	2 0	8 2	,,
		11 25	3 10	1 11	5 9	,,

In the above register only one observation is recorded. It would be necessary, however, to take another at the opposite bank, at least; but generally it would be desirable to take one at every four or five soundings. In some cases, it is requisite to take an observation at every sounding. The fall from the datum line to the surface of the water is ascertained by the ordinary process of levelling. Fig. 6529 is the section of the river, as protracted from the above register. In order to reduce the soundings to low water, and to determine the height of sand-banks above the low-water

line, a line should be taken at low water along the middle of the low-water channel, throughout the whole extent of the survey. This is done by rowing gently down the stream and taking the soundings at regular intervals in the manner described above. The intervals may be determined with sufficient accuracy by counting the strokes of the oars.

6529.

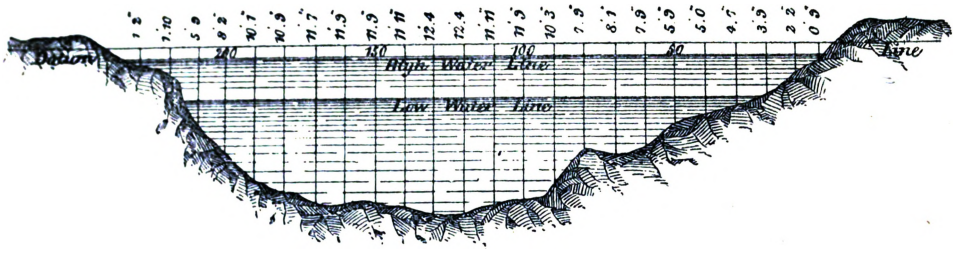

One of the most important preliminary observations connected with the execution of hydraulic engineering works is the determination of the cross-sections of the bed of a river by boring or probing. For it is by this means that the nature of the bed is ascertained. In deepening a river, for example, it furnishes the data for determining the line of the excavation, the most suitable means of executing the work, and the probable cost. And in selecting a site for a pier, or other engineering structure, boring constitutes the only available means of ascertaining the form and composition of the ground which is to serve as the foundation.

The mode of carrying out borings of this nature is very simple; but it demands the greatest care to avoid erroneous results. And it must be borne in mind that a slight error committed in this operation may lead to very serious consequences. The most convenient time for making the borings is at low water. The places at which the borings are to be made and the intervals apart should be all determined before beginning the actual operations. In making the selection, the engineer must be guided by the objects of his investigations and the character of the river's bed. When the survey is made solely with reference to the improvement of the navigation, sections are, in general, required only where fords or shoals occur, and in such cases one or more lines of section will be decided upon, according to the extent of the shoal. In other cases, where the bed is irregular, and rock is found at intervals, either bare or covered with a few feet of sand and gravel, numerous sections will be necessary. The positions of the lines of section should be marked by a stake, which stake should be placed with reference to the datum employed for the soundings, so that the depths of the borings may be referred to that datum. It will be necessary in all cases to erect a tide-gauge previous to commencing boring operations to indicate any change of level that may occur while the work is being carried on.

A section of the bank from the stake to the edge of the water is first made in the usual way with the spirit level and rod. The borings are then taken at intervals of 10 ft. and upwards, according to the nature of the bed and the object of the inquiry. To ensure accuracy and uniformity in the intervals, some engineers stretch a cord, graduated to the proper intervals, across the river, and support it upon rods driven into the bed of the river for that pupose; the section of the opposite bank from the water's edge to the high-water line is made in the same way as the first portion.

The borings, or more strictly speaking, probings of the bed of the river are made with iron rods $1\frac{1}{8}$ in. in diameter and about 18 ft. in length. They should be steeled at the points, and graduated to feet, half-feet, and quarters with chisel marks. The mode of working these rods is to *jump* them into the bed of the river from boats, unless the material to be bored through be too hard to admit of this, in which case they are driven with a light hammer. When a difficulty is found in extricating them, a purchase may be applied from the side of the boat.

The depths of the borings must be registered as they are taken, and afterwards corrected with respect to the datum. To ascertain the depth of the boring, it is only necessary to deduct that of the water from the total length of rod immersed. The following is the manner of keeping the field-book usually adopted, the fall from the datum line to low water being 3 ft. 9 in.;—

Depth of Water.	Corrected Depth of Water below Datum.	Distances.	Corrected Depth of Boring below Datum.	Depth of Boring.
ft. in.	ft. in.	feet.	ft. in.	ft. in.
8 0	11 9	100	13 1	1 4 through gravel to rock.
8 2	11 11	110	14 1	2 2 " "
8 7	12 4	120	14 4	2 0 " "
8 7	12 4	130	14 2	1 10 " "
8 2	11 11	140	14 7	2 8 " "
8 0	11 9	150	15 5	3 8 " "
8 0	11 9	160	15 7	3 10 " "
7 10	11 7	170	15 7	4 0 " "
7 0	10 9	180	15 3	4 6 " "
6 4	10 1	190	14 5	4 4 " "
4 5	8 2	200	14 0	5 10 " "
2 0	5 9	210	13 11	8 2 " "

The borings in this case are upon the same line of section as the soundings in the last figure. Fig. 6530 is the section as protracted from the above register. The borings were continued from the low-water to the high-water line.

6530.

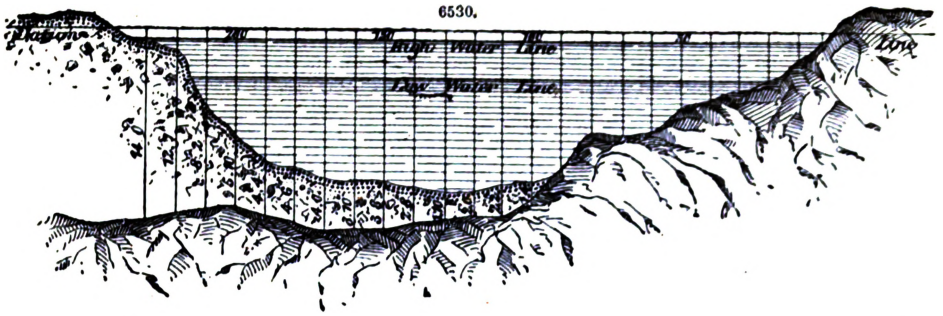

The discharge of a stream is usually estimated by the number of cubic feet of water that passes along its channel in a given time, as one second. To determine this quantity, it is necessary to ascertain the mean velocity of the stream, the discharge being equal to the product of the area of the section by the mean velocity. The area of the section is found by the soundings; but it is essential to accuracy when computing the discharge, to select a section at a point in the stream where the equable flow of the water is not disturbed by great irregularities of the bed, or by unusual impediments. The velocity of a stream is greatest at the surface and at that point in the surface which is situate over the greatest depth. It decreases gradually towards the bed and the banks in consequence of the friction of the water upon their surfaces. When the section of a stream is uniform, the mean velocity may be deduced at once from the greatest velocity by a simple formula. In rivers, however, we never get a uniform section, and it becomes, therefore, necessary to find, by direct experiment, the greatest velocities at several points in the breadth of the stream. The section obtained by the soundings shows the breadth divided into a number of equal lengths by the lines of sounding. We have, then, only to find the greatest or surface velocity in the middle of each of these lengths, and to deduce from it the mean velocity in that portion of the stream which is enclosed by the two sounding lines. The area of this portion multiplied by the mean velocity will give the discharge in that portion or compartment of the section. The sum of the products of all these elementary areas by the elementary mean velocities, or the product of the total area of cross-section by the mean velocity, as a mean of all the elementary velocities, will be approximatively the discharge of the river. We say *approximatively*, because it is impossible to obtain a formula that shall give the mean velocity exactly under all circumstances. In large rivers the mean will be higher than in small streams, and there will always be local disturbing influences, the action of which cannot be included in the expression of any general formula. It is obvious that the approximation will be in proportion to the smallness of the divisions or elementary areas described above; but in practice it is seldom necessary to determine the discharge with great precision. It will generally be sufficient, when the soundings are taken at small intervals, to make the area between three soundings the elementary area, and to determine the velocity at every second sounding.

Several means are employed to determine the surface velocity. The most simple is to note the time of transit of floating bodies over known distances. For this purpose, very light bodies must be selected. But this method is liable to error, by reason of the irregularities and eddies of the current, caused by irregularities of the bed, and by the influence of the wind upon the float. There are also difficulties in employing this method on broad rivers where the float cannot be observed from the banks. A more trustworthy means of ascertaining the velocity is the tachometer. This is a small instrument provided with fans, like those of a windmill, to which motion is communicated by the water. The velocity is deduced from the number of revolutions of the axle. This instrument can be used at any depth. A still more accurate instrument is Pitot's tube as modified by Darcy. We have fully described it in the article Hydraulics. Like the preceding, it may be used for any depth.

When the surface velocities have been ascertained, the next step is to reduce them to mean velocities. This is readily effected by means of the following rule, due to Dubuat;—

"If unity be taken from the square root of the surface velocity, expressed in inches a second, the square of the remainder is the velocity at the bottom, and the mean velocity is half the sum of these two."

Thus, let a be the surface velocity, β the bottom velocity, and γ the mean velocity, all in inches. Then $\beta = (\sqrt{a} - 1)^2$, and $\gamma = \frac{a + \beta}{2}$. Hence we have the following formula for deducing the mean velocity directly from that observed at the surface; $\gamma = \frac{a + (\sqrt{a} - 1)^2}{2}$.

By means of the tachometer, or Darcy's gauge, the mean velocity in each of the divisions or partial areas of the section may be determined without the aid of formulæ. To do this, it is only necessary to measure the velocity at several points in the depth of the stream and to take the mean.

When a close approximation to the true discharge is not desired, the quantity may be found from formulæ, without resorting to the actual measurements described above. By this method the mean velocity is computed from certain measured quantities of which it is a function. There are two classes of formulæ proposed for this purpose. Those of one class are based upon the supposition

of uniform motion, and those of the other class upon that of permanent motion. The former requires that the cross-section of the channel shall be invariable and the slope of the fluid surface constant. In other words, if we suppose the stream divided into straight filaments, parallel to the direction of its motion, the velocity may vary for different filaments, but not at different points in the same filament. According to the theory of permanent motion, on the contrary, the cross-section and slope of the fluid surface may vary, but the discharge through the different cross-sections must be identical; that is, the stream is supposed to be divided into filaments parallel to the general direction of the motion, varying from point to point in diameter, and therefore in velocity, but unvarying in discharge.

Evidently the latter supposition is more in conformity with the actual condition of rivers, but the formulæ which are based upon it differ from those for uniform motion only in containing an expression that takes into account the changes of vis viva caused by changes of cross-section. Consequently, if these variations of cross-section are unknown, the only distinctive terms between the two formulæ disappear. As this is generally the case, formulæ for uniform motion are almost exclusively employed. Numerous formulæ of this class have been proposed by eminent hydraulic engineers, and it must be confessed that the results obtained from them are conflicting. Some of them, however, give results pretty near the truth. Among these, the simplest and probably the most accurate, is that of Chezy, and it is the one now generally adopted for large bodies of water in rapid motion. This formula is the following; $V = B\sqrt{r\,s}$, in which V is the main velocity of the river in feet a second, r the hydraulic mean depth, s the sine of the slope, or the fall of the water surface in one English foot, considering the channel straight and nearly uniform, and B a certain coefficient.

The value of B as adopted by Chezy is not known, as it is not found in any of his papers; but several different values have been assigned to it by subsequent engineers. Thus Young, for large streams, adopts 84·3, Eytelwein, 90·4. D'Aubuisson, for velocities over 2 ft., used 95·6. Leslie, for small streams, adopts 68, and for large streams 100. Beardmore uses 94·2. Neville, for straight, rapid rivers, with a velocity of 1·5 ft., adopts 92·3, and for greater velocities 93·3. Stevenson, for small streams, adopts 69, and for large streams 96. It will be seen from this that considerable diversity of opinion exists concerning the value to be assigned to B. The reason of this lies in the fact that what is true for a perfectly uniform channel, like that prepared for purposes of experiments, is not true for an irregular channel like the natural bed of a river; and engineers in trying to adapt the value of the coefficient found for the uniform channel to the requirements of a natural river, have been thrown back upon their own experience. And as no uniformity exists among those numerous influences which affect the flow of a natural stream, none was to be expected in the conclusions arrived at. What, for instance, has been found to be true of the Mississippi, may be far from the truth in the case of such a river as the Thames. Hence the discrepancy shown in the values of B as determined by different authorities. A value, however, which will give a very closely approximative result when applied to the rivers of England, is 89. With this coefficient, the formula becomes $89\sqrt{r\,s}$, from which the discharge of the river may be easily calculated.

It may be necessary to remark that care should be taken when gauging a river in a portion that is within the influence of the tide that no under-currents exist, as these would vitiate the results obtained from the mean velocity. The existence of under-currents may be ascertained by means of the instruments already described.

The velocity of a stream is closely related to the stability of its channel. The wearing action of the current, against which it is one of the chief objects of engineering works to protect the banks, is dependent on the velocity of the water and the nature of the materials through which the channel passes. Some interesting experiments made by Dubuat show the relation existing between the velocity of the current and the stability of the channel, from various substances. He found that the greatest velocities close to the bed consistent with the stability of the following materials are—

For Soft clay	0·25 foot a second.
„ Fine sand	0·50 „ „
„ Coarse sand, and gravel as large as peas	0·70 „ „
„ Gravel as large as French beans	1·00 „ „
„ Gravel 1 in. in diameter	2·25 feet a second.
„ Pebbles 1½ in. in diameter	3·33 „ „
„ Heavy shingle	4·00 „ „
„ Soft rock	4·50 „ „
„ Rock, various kinds of	6·00 „ „ and upwards.

When the bed of a river is composed of such materials that the greatest velocity of the current at times of flood is insufficient to set them in motion, the channel is said to be in a permanently stable condition. If the materials are of such a nature that the current is sufficient to move them only when swollen by flood-waters, the condition of the channel is described as stable. And when the materials are unable to resist the force of the current at ordinary times, the condition of the channel is unstable. Dubuat has shown that the bed of a river in an unstable condition presents a series of transverse ridges having a gentle slope on the up-stream side and a rapid slope on the down-stream side. The particles of matter, whether of clay or sand, are rolled up the gentle slope to the summit of the ridge, whence they fall into the next furrow. Here they remain until the removal of the whole of the preceding ridge leaves them again exposed. The motion of the particles produced in this way is much more rapid than we might suppose. Dubuat's experiments showed that with a velocity of 1 ft. a second sand travelled in the manner described above at the rate of about 19 ft. in twenty-four hours.

When the banks of a river are unstable, the course of the channel is continually undergoing

change. If we suppose the course originally straight, it is evident that it cannot long remain so, for a very slight obstacle is sufficient to cause a deviation of the current, which is thus directed against the opposite bank. This bank being unstable, is gradually scooped out at that point by the action of the current, and the earthy matter held in mechanical suspension by the water is gradually deposited in the stiller portion of the stream against the other bank. Thus, while one bank becomes more concave, the other becomes more convex, and in this way a bend is established. On issuing from this bend, the current is directed against the opposite bank, and another bend is established in the contrary direction. This action is continually repeated down the stream, and is one of the causes of the sinuosity noticeable in the course of rivers. It is also evident that this sinuosity must go on increasing until stable ground is met with.

There is also another influence to which we must call attention, namely, the constant tendency of a stream to widen its bed. Other things being equal, the sides of a water channel resist the action of the current less than the bottom. But independently of this action, the banks are exposed to that of atmospheric influences as well as to that of gravity; hence they crumble and fall, whilst the same action of gravity pressing the materials that form the bed upon those lying beneath, increases the friction, and so renders their displacement more difficult. Moreover, the earthy matters that fall from the banks are swept away by the current, leaving the gravelly portion to increase the stability of the bed. Thus the breadth of the bed of a river at any given point will, comparatively to its depth, be in proportion to the stability of the ground at that point.

It must be borne in mind that the sinuosities of a river alluded to above, by increasing the length of the channel upon the same absolute slope, diminish the relative slope and consequently the velocity of the current. The flow of the fluid mass being retarded, its breadth and height of surface will be increased, and hence may result inundations and injury to property. The diminished velocity also tends to establish equality between the force of the current and the resistance of the materials of which the bed is composed, and thus to promote stability.

Intimately connected with the stability of a river's channel is the relation which exists between the velocity of its current and the weight of the particles of solid matter held in mechanical suspension. It has been remarked that the earthy matter scooped out from the bank by the force of the current directed against it was deposited in other places where the velocity was less. Also the beds of rivers, except in parts where the velocity of the water is very great, are composed of particles which have been brought down by the stream. As this deposition of matter changes the configuration of a water channel, it is important to know how rapidly it may go on, and how long it may continue. This is, indeed, one of the questions which, at the outset, claim the attention of the engineer engaged in designing river improvements. The earthy materials brought down by the water are obtained from two sources. The first of these is the banks of the river and of its feeders. The particles seized upon by the current are carried along until they are whirled into a part out of the force of the current or until they come to a part of the river in which the velocity is reduced, where they are deposited. The heavier portions will thus soon come to rest; the remainder, however, may never be deposited in the river at all, as the velocity may in no part be sufficiently reduced to allow the deposition to take place; for the water never being charged to its maximum carrying capacity from this source alone, a considerable reduction of velocity is necessary to cause deposition.

The second and chief source of sedimentary matter is the surface of the country drained by the river. The matters obtained from this source are brought down the streams by flood-waters, that is, by the surface water which finds its way into them. The quantity of sedimentary matter poured into a river from this source may be imagined when we consider the turbid character of surface water, especially after periods of drought. Thus, in times of flood the river may be charged fully up to its maximum capacity. Dupuit has demonstrated that the power of suspension is due to the fact that the different layers of water are actuated by different velocities, and thus exert different pressures upon different sides of the suspended atoms. Hence the greater the difference in the velocities of consecutive layers, the greater will be the power of suspension. Now it has been conclusively proved by direct measurements that the change of velocity from layer to layer is, in horizontal planes, greatest near the banks and least near the thread of the current; and in vertical planes parallel to the current, greatest near the bottom and surface, and least at a point about 0·3 of the depth below the surface, where the absolute velocity has its greatest value. Consequently, if the water be charged to its maximum capacity with sedimentary matter, the greatest amount will be found near the banks and near the surface and bottom, and the least amount near the thread of the current and near the layer 0·3 of the depth beneath the surface. If, on the contrary, the water be under-charged, the distribution of sediment will follow no law, and excepting the part near the bottom where, by reason of the suspending power being much greater there than elsewhere, there will always be an accumulation of matter, the quantity at any point will be determined by the accidental circumstances of eddies and other interruptions to the flow.

When a stream is charged with sediment to its maximum capacity, it is evident that the slightest reduction of its velocity will cause deposition. Thus, a projection of the bank, a bend, the abutments of a bridge, or any similar impediment to the current, causes a diminution of velocity in that portion of the stream which is most heavily charged with sediment, and the space above the impediment, as far as its influence extends, silts up. An increase of breadth in the river channel reduces the velocity of the whole current, and the suspended matter is deposited over the whole bed; thus the height of the bed becomes raised. But, as we have seen, the suspended matters are not equally distributed over the stream, and therefore they are not deposited equally over the bed. Hence are produced deviations and divisions of the current, shoals, and frequently inundations.

This silting up of river channels is one of the chief questions claiming the attention of the engineer who proposes altering the channel in any way; and he should ascertain, previously to designing any work that will affect the flow of the current, the quantity of sedimentary matter held in suspension by the water, both when the river is in its normal and when it is in an abnormal

condition, so as to be able to determine beforehand the effect of reducing the velocity in any part of the stream. Whether or not the stream is charged to its maximum capacity will be shown by the existence or the non-existence of the conditions we have mentioned. A simple and trustworthy means of ascertaining the quantity of sediment in a stream is that employed by the engineers commissioned by the American Government to survey the Mississippi. For these experiments three stations were selected, two near the banks, and one in the middle of the river. Samples of water were collected daily at surface, mid-depth, and bottom. These samples were secured in a small keg, heavily weighted at the bottom and provided at each of its heads with a large valve, opening upward. These valves allowed a free passage to the water while the keg was sinking to the required depth, but prevented its escape while being drawn up. When the keg reached the surface, the water contained in it was thoroughly stirred and a bottle filled from it. On returning to the office, 100 grammes of water were accurately measured from each of the samples, and each parcel separately preserved in a precipitating bottle. After receiving six days' contributions, these bottles were set aside for two weeks to settle. The greater part of the water, then perfectly clear, was removed by a siphon. The remainder, after thorough shaking, was poured upon a double filter composed of two pieces of filtering paper of exactly equal weight. After becoming quite dry, the two papers were separated and placed—one containing all the sediment of the 600 grammes of river-water, and the other perfectly pure—in opposite sides of a very delicate balance. The difference of weight, which was, of course, the exact weight of the sediment, was then accurately ascertained. These elaborate experiments were continued for fifty-two weeks, with the following mean results;—For the two outer positions, surface, ·291 gramme; mid-depth, ·330 gramme; bottom, ·379 gramme. For the middle position, surface, ·291 gramme; mid-depth, ·365 gramme; bottom, ·376 gramme. Total, 2·042 grammes of sediment in 600 grammes of water, or ·34 per cent. These results show that the water of the Mississippi is never charged to its maximum capacity. The above method of ascertaining the quantity of matter in suspension may be readily applied to all rivers. It will be sufficient for practical purposes to take three samples a day for two consecutive days when the river is at ordinary summer level, and the same number for three consecutive days when the river is in flood.

We have now pointed out the several agencies which tend to produce defects in a river channel, and have described briefly their mode of action. Against these agencies the engineer has to contend; and to contend successfully, he must acquire a complete and an intimate knowledge of their influence generally and under particular conditions. Such knowledge can only be acquired by careful observation. The defects which these agencies may produce assume several forms. The channel may have too sharp a bend, which is destructive of the stability of its banks and an obstacle to navigation. It may be too shallow in certain parts, in consequence of the wearing away of the banks and the silting up of its bed. It may be too wide in places—a condition that may cause the last-mentioned defect, by reducing the velocity of the stream, and thereby favouring the silting up of the bed and the formation of shoals. It may even be too narrow in particular places, offering a high velocity at all times, and a tendency to flood in rainy seasons; or its declivity may be too flat in consequence of its too circuitous course, or the existence of obstacles to the flow of the current, such as islands, shoals, weirs, ill-designed bridges, and similar obstructions. Before any alteration in the bed of a river is attempted, the effect of such an alteration upon the current, both above and below that point, must be carefully considered. If the engineer neglect this precaution, he may find that he has produced a greater evil than he undertook to remove. As an example of an ill-considered measure, we may mention the case of the Robine, a canal running from the Aude to the Mediterranean through Narbonne, in France. The original constructors of this canal gave it a very circuitous course near this town for the purpose of increasing the depth by diminishing the velocity of the stream. Towards the end of the last century, the sinuosities being attributed to caprice, it was resolved to straighten the channel to expedite the navigation. When the work was completed, the draught of water was found to be insufficient.

The object in all river improvements is to obtain a channel as near as practicable uniform in section, or gradually increasing from the source to the mouth, having sufficient capacity to carry off flood-water without overflowing, with a velocity that shall not endanger the stability of the banks. Thus it will be seen that the engineering works for the improvement of the upper portion of a river will consist chiefly of excavations to remove shoals and other obstructions, and to widen narrow parts, regulating dykes to contract wide shallows, diversions of the channel, and works for stopping useless branches.

The work of excavating the bed of a river for the purpose of deepening its channel consists mainly of dredging. This operation may be performed by hand, by steam, or by means of the current itself. When performed by hand, an implement called a spoon is employed. It consists of a pole, having at one end an iron ring steeled on the forward edge, to which a leathern bag is attached. The end of the pole is held by a man, and the ring is hung by rope tackle capable of being wound up by means of a crab. The man who holds the pole directs the forward edge of the ring against the bottom while the spoon is being dragged along by the winding up of the rope. When the spoon arrives beneath the crab, it is hauled up and its contents emptied into a barge. In cases where the depth of the water does not exceed 6 ft.; this system of dredging may be employed with advantage, as it is both effective and cheap, it having been ascertained that the labour and cost of the operation are not much greater than in similar excavations on dry land. When, however, the depth is great, recourse must be had to the dredging machine. With a steam dredging machine, the cost of excavating is about the same as that of similar operations on dry land. A steam dredger of 16 horse-power will, under favourable circumstances, raise about 100 cub. yds. an hour.

The most economical means of removing the materials of the bed of a river when they consist of mud, sand, or light gravel, is the employment of the current for that purpose. The operation is performed by means of a kind of movable dam, usually consisting of a framework covered with boards attached to a boat. The boat is moored in the stream, and the dam lowered to within a few

inches of the bottom. The water-way being thus greatly contracted, the velocity of the current over the bed is proportionately increased, and this increased velocity will scour the bed to a considerable depth in a short time. From 30 to 70 cub. yds. may be excavated in this way by one boat. Fig. 6531 shows one of these dredgers as used on the Garonne, in which river it removed about 60 cub.

6531.

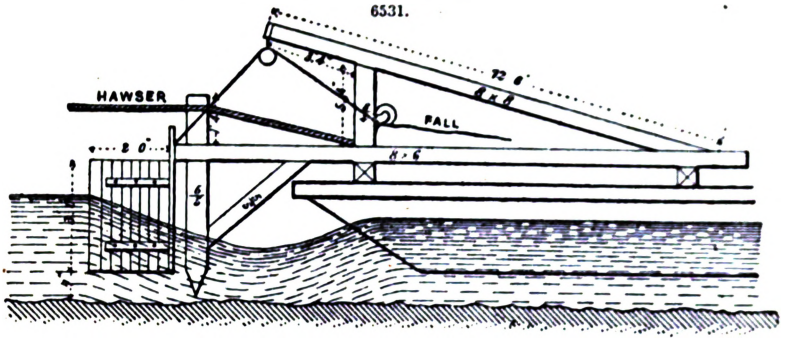

yds. a day of sand and clay, at a cost of about 2½*d.* a yard. It must be borne in mind that this mode of dredging acts only by displacing the materials of the bed, leaving them free to be deposited elsewhere. It cannot therefore be applied where a necessity exists for the removal of the materials disturbed.

When the bed is composed of rock, recourse must be had to blasting. If the current is low, it will often be advantageous to enclose such parts by temporary dams, as is done in the case of foundations, and to lay them dry.

When the shallowness of a river is caused by excessive width, the defect may be remedied by a regulating dyke or longitudinal embankment. These dykes may be constructed either of dry stone or of wattled piles and gravel. When built of stone, they should have a slope of about 1 to 1. The latter mode of construction is, however, the more usual. In this case the piles should have a diameter of not less than one-twentieth of the length; they should be driven into the ground in a double row to a depth equal to twice that of the water; the distance between the rows should be once and a half the depth of the water, and the distance of the piles apart, longitudinally, should be equal to the depth of the water. After being tied together transversely, the rows of piles are wattled with willow twigs, and the space between filled up with gravel. The various modes of executing the wattling will be described later.

The construction of dykes not only increases the depth by forcing the water to flow through a narrower channel, but the velocity of the water being thereby increased, the bed is scoured out until a sufficient depth is reached to establish equilibrium between the current and the materials of which the bed is composed. This consequence of erecting a dyke must be carefully calculated beforehand, and the amount of contraction duly apportioned to the results. It may be remarked here that the only certain means of permanently deepening the bed of a river is the construction of continuous longitudinal embankments. Dykes built in the same way as those described above are used to stop up side branches. In this case, they are thrown across the upper end of the stream from bank to bank. The effect of stopping up a branch is to throw a larger body of water into the main channel, the stream in which will be both deepened and accelerated thereby. Thus the consequences will be the same as those produced by the longitudinal dyke, and they will have to be calculated in the same way.

When the course of a river is so circuitous that the velocity of the current is not sufficient to prevent deposits, the bed silts up and the channel becomes too small to contain flood-water. Hence result disastrous inundations; and as each successive overflow carries away some of the bank, the evil tends to become worse. Moreover, as the low velocity in one part checks the flow of the stream higher up, inundations may result in other places. In such cases, it may be desirable to divert the stream into a new and straighter channel, excavated for it. Great caution is, however, necessary in undertaking a work of this nature. We have already directed attention to one of the effects of a cut-off in the case of the canal at Narbonne. More disastrous effects than the one referred to may be produced by the diversion of a stream. It must be borne in mind that a cut-off brings down the water from above it with a greater velocity than it possessed in its former sinuous channel. This is the object for which the cut-off was made, and the immediate effect of the increased velocity is to relieve that portion of the river which is situate above it. But the water enters the lower portion of the river with a greater velocity than when it followed the more circuitous course; and consequently the level in that portion is raised to a degree corresponding to the depression in the upper portion. Thus it will be seen that the only effect of a cut-off is to relieve one part of the river at the expense of another. Whether such a remedy will be beneficial or otherwise will depend upon the nature and capacity of the channel below the cut-off, and these must be carefully ascertained and considered before undertaking the diversion of the stream. When, however, such a remedy seems desirable, there are certain important points to be kept in view in the execution of the work. A primary point is to make the new channel as deep as possible. We have shown that the tendency of a river is to widen rather than to deepen its channel, and this must be kept in view in excavating a cut-off. Another important condition is to connect the new channel with the old by a curve of a considerable radius. Unless this condition be fulfilled, the stream will either not enter at all, or if it enter, will not flow freely in the new channel. It is also an advantage to slightly curve the new channel, for the current will then keep

constantly against the concave bank; whereas, if the channel is straight, it will deviate from side to side, and thus tend to produce bends. The velocity, too, is somewhat checked by the curved channel, and this will generally be an advantage. The new channel must not be opened to receive the waters of the river until the down-stream end of the old one has been completely closed. For it has been found impracticable to divert the stream into the new channel unless this be done, by reason of the impossibility of throwing out the new cut to a depth inferior to that of the old channel. It is also necessary to clear the bed of the new cut of all trees, reeds, or aquatic plants, as these impede the flow of the current and favour deposits.

The simplest and most effective means of protecting the adjacent land from inundation in consequence of a river overflowing its banks, is to increase, artificially, the height of the banks at those parts liable to overflow. This system of embanking rivers has been very extensively applied on the Continent and in America, and everywhere with the most complete success. Yet in England, notwithstanding the ravaging inundations which frequently occur, it is rarely resorted to. It may, however, be confidently expected that some effort will soon be made to prevent these oft-recurring floods, so discreditable to British engineering enterprise, and the value of the system, which is as inexpensive as it is efficacious, will force itself upon the notice of engineers. The mode of constructing these embankments differs but little in its main features from that adopted for embankments intended for other uses. Some of the details, however, require special mention; and we cannot give a clearer description of these than is contained in the following extracts from the specifications of the embankments constructed on the Mississippi, which specifications are sanctioned by the State.

"The embankment shall be graded 5 ft. wide on the top, except where otherwise directed by the chief engineer, with side slopes of 6 to 1 on the river side, and 2½ to 1 on the other side."

Fig. 6532 shows the profile of the embankment constructed according to this specification. The dimensions were, however, considered excessive by the engineers who conducted the survey of the river between the years 1850 and 1861, and in their report submitted to the Government in the latter year, they recommend that "the width at top shall be equal to the height, the outer slope 3 to 1 and the inner slope 2 to 1." This is more in accordance with the dimensions adopted in Europe. Fig. 6533 represents the profile as modified according to these recommendations.

6532.

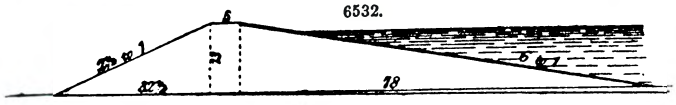

6533.

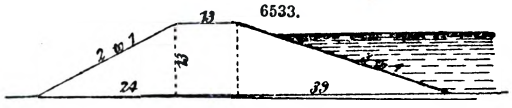

"The ground to be occupied by the embankment must first be cleared of trees, stumps, roots, weeds, and all perishable matter, the trees and stumps being cut up by the roots, at least 1 ft. below the surface of the ground. The entire surface must then be thoroughly broken with a spade or plough, in order to form a bond with the earth deposited. Then a muck ditch must be cut, 6 ft. wide at top and 3 ft. at bottom, and 4 ft. deep; all stumps and roots crossing it being carefully taken out and removed beyond the base of the embankment. The muck ditch must be cut 10 ft. from the centre line of the embankment, great care being exercised not to displace any of the stakes of the centre line, on the side next the river, the earth from it being thrown entirely on that side of the ditch next the river. As each section of a mile in length is thus cleared, broken, and muck ditch cut, the contractor must notify the fact to the engineer in charge, when he will set stakes on each side of the centre at the proper distance for the base of the embankment. As soon as the work is staked, the muck ditch must be filled in again with buckshot-earth or clay, obtained from without the base of the embankment, and the earth tramped in by horses or mules ridden rapidly back and forward constantly while the earth is being put in; at least one horse to every eight wheelbarrows being thus employed. This filling and tramping to be kept one mile in advance of the embankment. In cases where the chief constituent of the embankment is sand or other porous material, the engineer may require a wall of buckshot or clay, 5 ft. thick, to be continued up from the muck ditch to the top of the embankment, the earth being tramped in by horses in the same manner as the muck ditch, as the embankment is built up on each side of it, the object being to obtain a stratum through the embankment impervious to water.

"When the ground is prepared in the manner set forth above, the embankment will be commenced, and it must be formed in uniform layers not exceeding 1 ft. in thickness; a sufficient number of men being continually kept on the embankment to spread the earth as it is wheeled or carted in. The slopes shall in every case be commenced *full out to the side stakes*, and carried regularly up as the embankment progresses.

"All earth designed for embankment must be *entirely* divested of roots and all other perishable matter. When the embankment has been raised 3 ft. the sides must be trimmed with slope-boards, and any irregularities appearing on the slope must be corrected at once; this trimming must steadily progress as the embankment increases in height.

"The engineer may, whenever he deems it necessary, require a double course of sheet piling, breaking joints, to be driven at the centre or either side of the embankment, 5 ft. below the surface of the ground, and extending up within 6 in. of grade. All piling must be driven in advance of the embankment, which shall be constructed on both sides of the piling simultaneously. The ends of embankments shall be protected from flood by a double row of sheet-piling closely driven and securely braced, extending across the base and around each side, not less than 100 ft."

The cost of excavating embankments in accordance with the foregoing specifications is in the State of Mississippi from 18 to 20 cents the cubic yard.

The French dykes on the Rhine, Fig. 6534, in that part of its course lying between the Black Forest and the Vosges mountains, where the height is 7 ft., have a width of 10 ft., the slope towards the river being 2 to 1, and towards the land 1½ to 1. When the height exceeds 7 ft., the width is increased by a banquette on each side.

The dykes of the Rhine in Holland, Fig. 6535, when near the river bank and when used for the road, have a width of 20 ft. on the top when 16 ft. high, a slope of 3 to 1 on the river side, and a slope of 1½ to 1 on the land side. The outer slope, when exposed to running ice, is protected by a revetment of brick or fascines. When the dyke is not near the river bank and is not used as a road, the width is only 6½ ft.

6534.

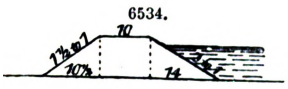

6535.

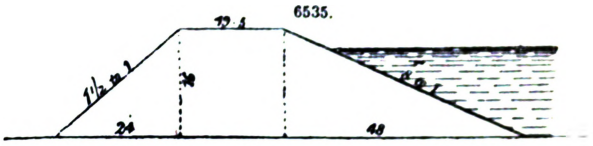

6536.

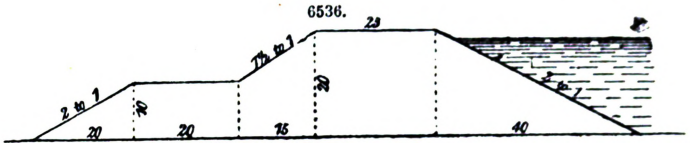

6537.

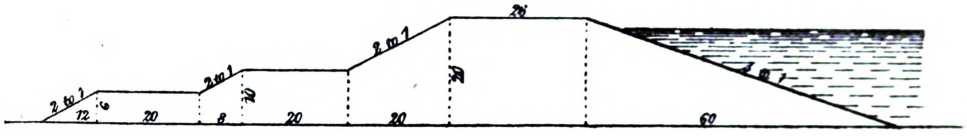

6538.

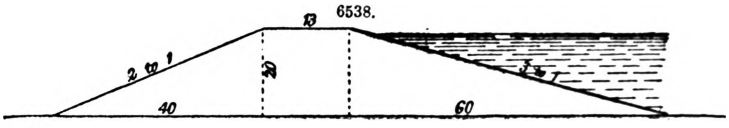

The dykes on the Po are 2½ ft. above the highest flood mark, their width is usually equal to the height, and the slope of their sides 2 to 1. When the soil is permeable, they are reinforced, Fig. 6536, at the height of the mean floods, by a banquette 20 ft. wide when the height is 20 ft. or upwards. Where the soil is very sandy and has but little cohesion, the dykes of the Po, when 20 ft. high and upwards, have a width at top of 26 ft., two banquettes 20 ft. broad, Fig. 6537, an outside slope of 3 to 1 and an inside slope of 2 to 1. The river roads are usually upon the embankment or upon the banquette.

The average height of the dykes on the Vistula, Fig. 6538, is 20 ft. The top is from 2 to 3 ft. above the highest flood. The width at top is usually 15 ft., or three-fourths the height, and the slopes are 3 to 1 and 2 to 1.

The protection of the banks of a river against the wearing action of the currents has now to be considered. The most efficient protection is a thick growth of aquatic plants; but as these constitute a serious impediment to the flow of the stream, artificial protection must be substituted for them. The means employed are various, differing according to the nature of the soil and that of the materials most readily available. Where stone is abundant and the slope of the banks suitable, dry stone pitching forms a very effective protection. This system has been adopted on the Loire where the pitching is remarkable for the perfection of its execution and its comparatively slight thickness. The slopes in these cases are generally about 1½ to 1. The stones are roughly squared and laid by hand in courses. The thickness of the pitching is from 8 to 12 in. at the top, and increases in going down at the rate of 2 or 3 in. a yard. A bed of gravel is laid beneath, and the foundations requisite to keep them from slipping are formed by a simple excavation or trough dug in the earth below the level of the mean summer waters, and subsequently filled in with rough rubble masonry. Sometimes, however, it is necessary to drive a row of piles with longitudinal wales, as shown in Fig. 6539. In calculating the strength of these wales we have only to consider that the maximum pressure they have to resist is $\frac{w \times s}{l}$, w being the weight of the pitching, s the rise of slope, and l the length of slope, friction being neglected for the sake of security.

6539.

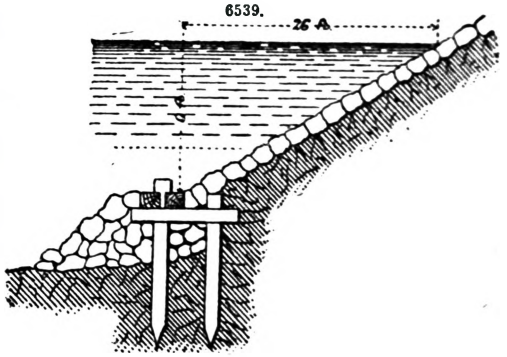

Where aquatic trees are abundant, fascines are employed instead of stone. These fascines are

bundles of willow twigs from 9 to 12 in. in diameter and about 12 ft. in length. They are laid with their length up and down the slope and are fixed to the bank by stakes. Sometimes a mixed system of fascines and stone pitching is adopted, as shown in Fig. 6540. Works executed in this way do

6540.

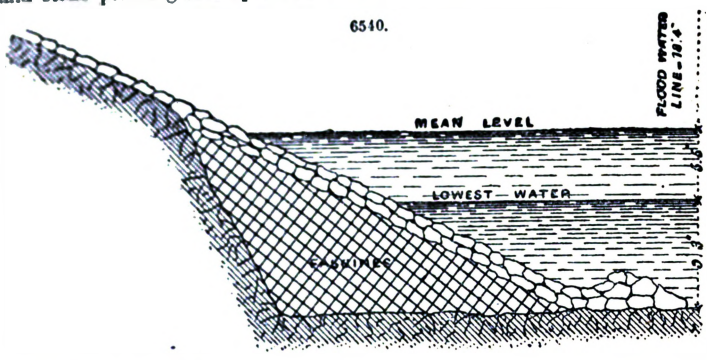

not, it is true, last very long, ten years being the limit of a fascine under water; but their duration is sufficient in rivers carrying much suspended matter, to give rise to depositions which eventually serve to effect the object intended in a more permanent way.

Timber sheeting is occasionally resorted to. This may consist either of sheet piling or of guide-piles and horizontal planks. The wales of the sheet piling or the guide-piles of the planking must be tied back to wooden anchoring plates firmly fixed in suitable situations. Sometimes it may be necessary to construct retaining walls to preserve the banks of a river; but such instances will seldom occur, and they will never extend beyond a very limited space. Groins are in some cases employed. These, however, should be used only as temporary expedients, as they impede the current and endanger the stability of the bed.

To render the upper portion of a river navigable, it is sometimes necessary to erect weirs in those portions of the stream which are naturally shallow and rapid. The object in this case is to produce a long reach of deep and comparatively still water. More frequently weirs are erected for purposes of water-supply or water-power. In the latter cases, the object is to prolong a high water-level from its natural situation to some place where it is required to divert water from the stream for the purpose of driving machinery, or for other purposes. These weirs are merely dykes or dams thrown across the stream; usually they are constructed of stone, but in some cases, especially in America, timber is employed for that purpose.

The pressures upon a weir being the same as those upon an ordinary reservoir wall, its dimensions are calculated in the same way. But as the water flows over a weir, forming a cascade on the down-stream side capable of undermining the base of the structure, a somewhat different mode of construction must be adopted, In choosing the site for a weir, it is well to avoid a bend if possible; because the water on leaving the weir possesses a high velocity, and if a bend be situate immediately below the weir, the concave bank is rapidly worn away. The usual position for a weir is at right angles to the banks. Sometimes, however, in order to diminish the height of the back-water in times of flood, the crest is made longer than the breadth of the channel, and this is effected either by placing it obliquely across the channel, or by giving it a V shape in plan. As a protection to the banks, the ends of the crest should be made slightly higher than the middle; the cascade is by this means directed towards the middle of the channel. The breadth of the crest should not be less than 2 or 3 ft.

The up-stream face is either vertical or sloped to about 1 in 1. The down-stream face has usually a long flat slope varying from 3 to 1 to 5 to 1. This slope is for further protection continued a short distance below the bed of the channel. Another method is to form the down-stream face into a series of steps, so as to break the cascade into a number of smaller ones. Occasionally a vertical face is adopted, with a nearly level stone-pitching beneath; this form is, however, not suitable for large bodies of water.

Weirs may be constructed of any of the materials used for dams, and the principles of construction are identical in the two cases. When solid masonry is used, the facing should be of block-in-course or ashlar; but the heart may be of rubble or concrete. The same precautions are needed as in the case of reservoir walls, to prevent the filtration of water round the ends or roots of the weir. When the material employed is dry stone, the mode of construction is the same as that of the embankments already described. The slope in such cases is steep at the back and long and gentle in front. To prevent the stones from slipping on their foundations, piles with horizontal wales may be used in the manner recommended for embankments. The accompanying figures are given as examples of stone river-dams. Fig. 6541 is a section of a dam on the Loire at Orleans; Fig. 6542 a section of a dam constructed by Telford on the Weaver; and Fig. 6543 is a section of a dam on the Carron, by Smeaton.

Works for the improvement of the tidal portion of a river consists mainly of the removal of obstructions to the tidal flow. These obstructions may be either natural or artificial. Those of the former kind consist of abrupt bends, shoals, contractions of the channel, and bars, the removal of which may be effected in any of the ways already described in reference to the river proper. In considering, however, beforehand the effect of any proposed change, we have, in the tidal portion, another agent to be taken into account, namely, the tide. When estimating the effect of certain changes in the river portion, the problem is simplified by the fact that the current flows constantly in one direction; but in the tidal portion we have the current flowing alternately in contrary

directions. Also in the former case we have to compute only the quantity of water passing down the channel; while in the latter it is necessary to ascertain not only the quantity of water brought

6541.

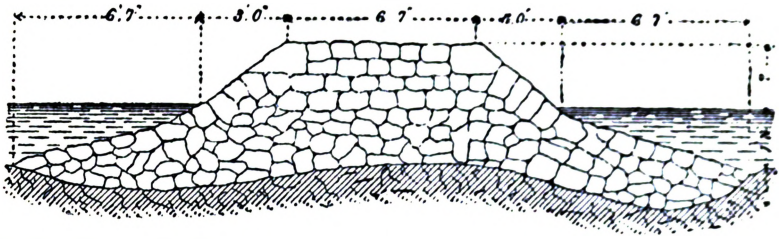

down, but also the quantity that ascends. These, however, are questions which may be determined by means of the hydrometrical observations already described. Beyond this the execution of the work will differ but little from that applicable to the former case.

6542.

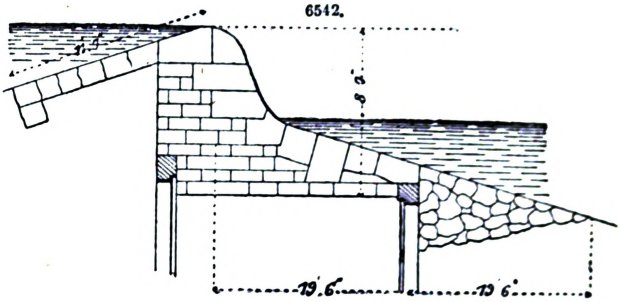

6543.

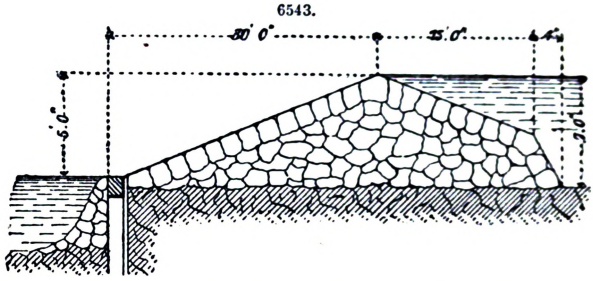

The scouring action of the current forms a particular feature in the tidal portion of a river. The alternate ebb and flow of the tides carries up and down the river channel large quantities of sedimentary matter, especially sand. This is deposited at slack water, to be taken up again when the flow has fairly set in, in the contrary direction. Thus the form of the bed is constantly changing. Remarkable instances of this may frequently be seen in open estuaries filled with sand-banks. The upward flow of the current due to the rising tide excavates a channel through the sand forming the bed. This channel is a sinuous one in consequence of the tendency of the stream to deviate from one side to the other. The sinuosity thus begun is constantly being increased by the scouring action of the current on the concave side and the deposition of the sand on the other. Thus the course of the channel is being changed during the whole of the flow. If the current continued in the same direction, the sinuosities would increase until they extended from bank to bank, when they would become to a certain extent permanent. But in a few hours the tide recedes, and the current sets in the contrary direction. This current will not scour precisely as the ascending current did; the course of the channel will therefore be excavated in some other direction, in some cases it may even be scoured back into its first situation. In this way the course of the channel is constantly shifting, to the utter destruction of navigation. The only effective remedy for this appears to be the erection of training walls. These are longitudinal dykes, similar to those we have described for contracting the bed of the river proper. Their use is to confine the current, that is, the low-water stream, to a certain portion of the bed where it may constantly exert its scouring action upon the same line of channel. It is obvious that by this means a greater permanent depth may be obtained than by allowing the stream to continue its previous ever-changing course.

Training walls are constructed of rough rubble stones, backed with clay and gravel. Their distance apart must be determined by the fresh water and the tidal discharge, and the requirements of the navigation. In some instances the distance is from 400 to 500 ft. They should not be raised far above the low-water line; from 3 to 5 ft. will be sufficient, as it is desirable to avoid contracting the high-water channel. It has been found that these walls do not sink more than 2 or 3 ft. into the sand of the bed, and that their foundations, being parallel to the current, are unaffected by the scour. Figs. 6544, 6545, are cross-sections of training walls constructed by D. Stevenson.

Improvements of the channel by dredging and other modes of excavation, cut-offs, and closing of subsidiary channels, are executed in the manner we have already described for the upper portion of the river.

Among the chief artificial obstructions to the tidal flow are groins or jetties, and piers of bridges. Jetties were formerly considered the most practicable and efficient means of confining the current to the middle of the channel; but experience has shown that their influence is rather pernicious than otherwise. They give rise to eddies and back-currents, and constitute a serious impediment to the flow of the stream. Hence their use has been almost entirely abandoned for this purpose. But as they exist in many estuaries, their removal will frequently constitute one of

the first operations to be undertaken in the improvement of the tidal portion of a river. Piers of bridges offer considerable obstruction to the current. Of course, existing bridges can rarely be

6544.

removed; but when it does happen that an old bridge is to be rebuilt, or a new one erected, care should be taken to avoid, as much as possible, obstructing the water-way. A sharply-curved part of the channel should not be chosen as the site of the bridge, and, whenever practicable, the stream should be crossed at right angles. The abutments must not contract the water-way, and the piers should stand with their length exactly in the direction of the current. The piers should also have pointed or cylindrical cutwaters at both ends to diminish the obstruction they offer to the current.

6545.

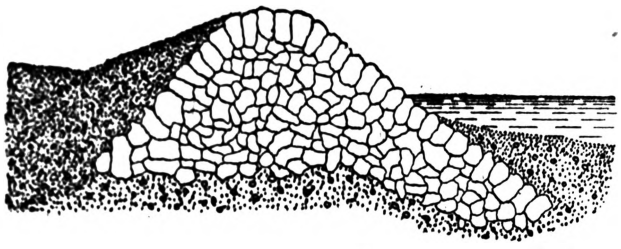

One of the greatest difficulties which the hydraulic engineer has to deal with in the tidal portion of a river is the existence of bars. A bar is a bank of sand, gravel, or earth, forming a shoal at the mouth of a river, obstructing entrance or rendering it difficult. The depth upon the bar is, of course, the ruling depth of the channel, and it is frequently such as to allow the passage of large vessels only at high water. Bars exist at the mouths of nearly all tidal rivers, and various theories have been propounded concerning their formation. The most reasonable is that they are the work of the sea alone. A well-known action of the sea is to throw up upon the coast a girdle of sand or shingle. This action goes on at the mouths of rivers as elsewhere. It is, however, opposed by the down current of the stream; were it not so opposed, the sea would speedily close up the mouth of the river. The force of the sea waves, especially against the bottom, is greater than the opposing force of the stream; hence a bar is formed. But as the height of the bar increases, the forces become more equal, until finally, when equality has been established, the height becomes permanent. This permanent height of the bar may be temporarily diminished by storms and floods; but on the cessation of the disturbing cause, it will be soon restored. There are a few rivers that are not encumbered with bars, and their non-formation in these cases may be attributed to the absence of one or more of the following conditions laid down by a writer in the Encyclopædia Britannica as necessary to their formation;—1st. The presence of sand or shingle, or other easily-moved material; 2nd. Water of a depth so limited that the waves during storms may act on the bottom; and 3rd. Such an exposure as shall allow of waves being generated of sufficient size to operate on the submerged materials.

It will be seen from the foregoing remarks that as the bar is due to the action of the waves, so the depth of water over the bar is due to the scouring action of the current. Therefore, in all works intended for the improvement of the tidal portion of a river, the scour upon the bar must be kept in view. This scour is produced in a greater measure by the tidal than by the fresh water; for the volume of tidal water discharged over the bar is generally far greater than that of the water brought down by the stream. The question of back-water is thus a very important one. By back-water is meant the tidal water which at every tide flows over the bar, and which, with the fall of the tide, flows *back* to the sea. The quantity of back-water is obviously measured by the extent of the area above the bar over which it flows, and an important question for the engineer is how far this area occupied by back-water may be encroached upon by solid works displacing the water, without injuriously affecting the scouring force on the bar. At first sight it may seem that any diminishing of this area must lessen the scour. This, however, is not strictly true. Experience has shown that where certain physical conditions exist, the area occupied by back-water may be reduced without injuriously affecting its scouring action. It cannot be denied that engineers are not agreed on this matter; but the commonly-accepted opinion, founded on the limited experience available, is expressed in the following propositions advanced by D. Stevenson in his work on Inland Navigation;—

1. The depth on bars is due to back-water.

2. Where the high-water level of the surface of the river, estuary, or basin, is the same as, or higher than, the level seaward of the point of abstraction, a diminution of tide-covered area will reduce the effective back-water.

3. Where the high-water level of the surface of the river, estuary, or basin is lower than the level seaward of the point of abstraction, a diminution of tide-covered area may, in some cases, be made without reducing the effective back-water.

4. The lower the level of back-water, the greater will be its effect in scouring the low-water channel; and therefore the nearer the site of abstraction is to high-water mark, the less injurious will be the effect.

5. By enlarging the tidal capacity of a river at a low level, where the acquired volume is filled every tide, compensation may be given for a much larger amount of water excluded at a higher level.

6. In consequence of the disturbing effects of the waves of the sea, the large discharge of rivers

during high floods, and the varying nature of the beds of estuaries and bars, it is not possible to conclude that with a given quantity of back-water, as deduced from the measurement of the tidal capacity of an estuary, a constant navigable depth can be maintained over the bar.

In this, as in most other questions concerning alterations made in river channels, so much depends upon physical features peculiar to the locality, that every new case requires special observations, and the engineer is to a great extent thrown back upon his own resources. The foregoing propositions will, however, serve to direct his observations, and so enable him to arrive at results in which he may feel some degree of confidence.

See CANAL. DAMMING. LOCKS AND LOCK-GATES. RETAINING WALLS.

Books on Rivers;—Bernoulli (D.), 'Hydrodynamica,' 4to, 1738. Bernard (M.), 'Nouveaux principes d'Hydraulique,' 4to, 1787. Fabre (M.), 'La Théorie des Torrents et des Rivières,' 4to, 1797. Du Buat, 'Principes d'Hydraulique,' 3 vols. 8vo, Paris, 1816. Robison's (J.) 'Mechanical Philosophy,' 4 vols. 8vo, 1822. Brooks (W. A.), 'On the Improvement of Rivers,' 8vo, 1841. Minard (C. J.), 'Cours de construction des ouvrages qui établissent la Navigation des Rivières et des Canaux,' 4to, Paris, 1841. Calver (E. K.), 'Conservation and Improvement of Tidal Rivers,' 8vo, 1853. Ellet (C.), 'On the Mississippi and Ohio Rivers,' royal 8vo, Philadelphia, 1861. Neville (J.), 'Hydraulic Tables,' 8vo, 1861. 'Report upon the Physics and Hydraulics of the Mississippi River,' by Capt. Humphreys and Lieut. Abbot, royal 4to, Philadelphia, 1861. Beardmore (N.), 'Manual of Hydrology,' 8vo, 1862. Frisi, 'Treatise on Rivers and Torrents,' translated by Major Garstin, 12mo, 1868. Stevenson (D.), 'The Principles and Practice of Canal and River Engineering,' royal 8vo, 1872. 'Great Rivers; the Parana, the Uruguay, and the La Plata Estuary,' by J. J. Révy, folio, 1873. Hewson (W.), 'Principles and Practice of Embanking Lands from River Floods,' 8vo.

RIVETED JOINT. FR., *Rivure;* GER., *Vernietung;* ITAL., *Commessura ribadita;* SPAN., *Junta de roblones.*

Riveting, or the art of forming a *riveted joint*, has become one of the most important in mechanical engineering, as in boiler work, girder work, iron shipbuilding, and in wrought-iron work generally, it constitutes an essential and a principal feature. The best form of riveted joint and the most suitable and economical proportions of the several parts of which it is composed are therefore problems deserving the most careful attention. It is strange that so important a matter should have been so little investigated; yet it is a fact that few experiments worthy of the name have been made to discover the principles according to which a joint ought to be designed, and the rules of practice have been left almost wholly to empirics. The consequence is that in our investigations of this subject we must rely chiefly upon theoretical considerations, guided, however, by the results of the few authenticated experiments which have been carried out.

The question is, given two iron plates that are to be joined along two edges, how is this joint to be made in the strongest and at the same time the most economical manner. Obviously the only way of effecting the join in a perfect manner is to weld the two edges; and accordingly many attempts have been made to execute the joint in this way. There are, however, so many practical difficulties to be encountered, that little is to be hoped for in this direction, in the case of long joints at least. Riveting must therefore continue to hold its present important position. There are two ways of forming a riveted joint. One is to make the two edges overlap each other, and then to pass a pin or bolt through holes opposite each other in the overlapping parts. This is known as the lap-joint, and is the simplest mode of joining two plates. The other way is to place the two edges flush with each other, and to connect them by means of a strip, overlapping both, and riveted as in the former case. This is called the butt-joint. It is obvious that this joint is nothing but the lap-joint repeated, as the strip may be considered as a third plate to which the other is joined. It possesses, however, certain advantages, one of which is that it may be used on both sides of the plates. The reality of this advantage will be seen later.

Now it is evident that a joint executed in this manner can never be so strong as the plate itself, because a portion of the plate has to be cut away to admit the rivets. The effective area of the plate is thus reduced by a quantity equal to the sum of the areas of the rivet-holes. This does not quite represent the reduction of strength, because the plate which is left between the holes is, in some way not yet clearly ascertained, injured by the operation of forming the holes. But for the present we will assume that it does not accurately represent the loss of strength. In practice this loss is a serious one, amounting to 50 and even 60 per cent. of the strength of the plate. Thus, in the case of a boiler, for example, one-half the metal is wasted. The remedy that first suggests itself is to use as few rivets as possible, and to give those the least possible diameter. But here we come

6546.

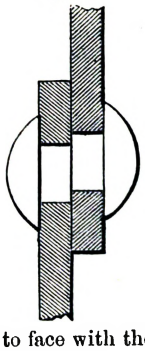

6547.

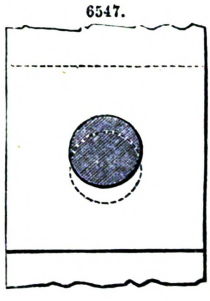

6548.

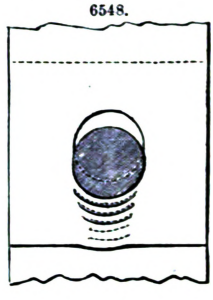

face to face with the manner in which a riveted joint yields. A joint of this kind may give way; 1, by the shearing of the rivet, as in Figs. 6546, 6547; 2, by the crushing of the plate, Fig. 6548;

3, by the tearing out of the rivet, in Fig. 6549; and by the tearing of the plate across, Fig. 6550. Another mode of fracture, namely, that represented in Fig. 6551, is considered by some to be the normal manner in which a rivet forces its way out of a plate. This manner, it will be seen, is by shearing the plate. There does not, however, appear to be any reason for believing that such an action may occur; nor is it compatible with the modes of fracture shown in Figs. 6549, 6550. The resistance of the joint to fracture by the shearing of the rivet is—

The shearing strength the square inch × the sectional area of the rivet.

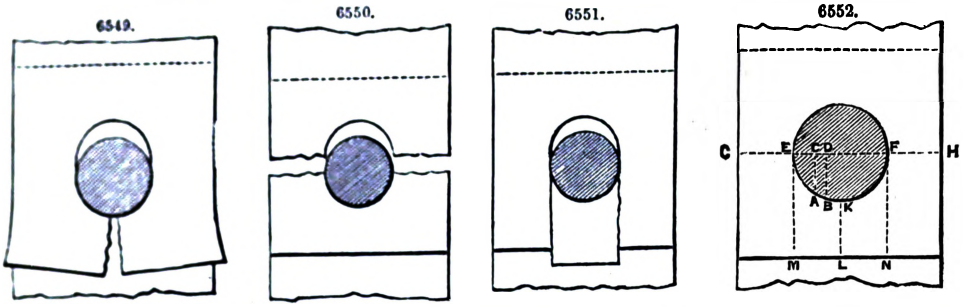

Here one means of reducing the area abstracted from the plate for the holes at once suggests itself, namely, the employment of the best quality iron for the rivets. In the case of the crushing of the plate, the resistance offered by any portion A B of the circumference, Fig. 6552, to the tensile strain, equals its resolved portion C D at right angles to the line of strain, multiplied by the thickness of the plate and by its crushing strength. Hence the resistance offered by the plate to crushing equals

The crushing strength × the thickness of plate × the diameter of rivet.

In the case of the joint failing by the plate breaking along the line K L, Fig. 6552, the portion E M N F opposed to the rivet may be considered as a continuous girder uniformly loaded, and the ultimate resistance then equals

$$\frac{\text{thickness of plate} \times (\text{depth K L})^2}{\text{length E F}} \times \text{A},$$

A being a constant, the value of which must be determined by experiment, as the circumstances differ widely from those of ordinary girders. This mode of fracture is given by Walter R. Browne in a valuable paper read by him before the Institution of Mechanical Engineers, to which paper we are indebted for the accompanying diagrams. But it is a case of little importance in practice. There are but three modes practically by which a riveted joint may fail, namely, the shearing of the rivets, the crushing of the plate, and the tearing of the plate along the line of rivets. The resistance to this mode of fracture equals

The effective sectional area along that line × the tensile strength the square inch.

Thus it will be seen that fracture by shearing depends on the diameter of the rivet; that fracture by crushing depends on the diameter of the rivet and the thickness of the plate; and that fracture by tearing depends on the thickness of the plate and the width on each side of the rivet. Now it is sufficiently obvious that in a perfect joint these several resistances will be equal to each other and the greatest possible; for whatever excess we have in one mode of resistance must be abstracted from another mode of resistance. If we increase the number of rivets, we increase the resistance to shearing, but we diminish the area of the plate along the line of rivets. If we diminish the number of rivets, we increase the strength of the plate, but we diminish the resistance to shearing. Again, if we diminish the number of rivets and increase their diameter, we increase, indeed, both the resistance to shearing and to tearing, but we diminish the resistance to crushing. Thus we have found a certain definite point at which to aim in designing a riveted joint, namely, equality of resistance. By comparing the first and second modes of fracture, we obtain the proper proportion between the diameter of the rivet and the thickness of the plate; and by comparing the first and last modes of fracture, we obtain the pitch of the rivets, or their distance apart.

To compare the first and second modes of fracture, let t be the thickness of the plate and d the diameter of the rivet. Putting P = the strain a square inch that will crush the plate, and P′ the strain a square inch that will shear the rivet, we have $\cdot 7854\, d^2\, \text{P}' = \text{P}\, t\, d$, whence $\frac{d}{t} = \frac{\text{P}}{\cdot 7854\, \text{P}'}$, which is the requisite proportion between the diameter of the rivet and the thickness of the plate.

The shearing strength P′ of wrought iron is usually taken as equal to its tensile strength. W. R. Browne, however, considers the tensile strength of riveted plates as somewhat inferior to their shearing strength, and he cites in support of his opinion numerous experiments made by independent authorities. The results of these experiments lead him to conclude that with the best quality iron, such as is used for rivets, the shearing strength should be taken equal to 22 tons the square inch, and the tensile strength of the plates 18 tons the square inch. The value of P, or the resistance to crushing, has not been determined with much precision. We should be far from the truth if we were to take the ordinary values for the crushing strength of wrought iron. The actual value of P is much higher than this, and the reason given by Browne is that experiments for values of crushing strength are made with cubes or short bars of the metal, which are free to move laterally in all directions; but in the case of a rivet-hole, the metal that is being crushed, or, as he expresses it,

crippled, is supported both by the surrounding part of the plate and also by the heads of the rivet. As this writer appears to have been the first to make direct experiments for the purpose of determining the value of P in riveted plates, we shall give his own account of them, and accept the value he has arrived at. After alluding to certain experiments made by Charles Fox, and others, on suspension-bridge links, he says ;—

"As however in these sets of experiments a single pin with links of best bar iron was employed, it seems very desirable for the present object to make some further experiments with actual boiler plates and rivets; and for this purpose a series of plates were prepared, and tested at Kirkaldy's works. In order to make sure that the joints should yield by this mode of fracture and no other, the rivets were made altogether out of proportion to the thickness of the plates, which was $\frac{5}{16}$ in., while the rivets were 1 in. diameter; ample width was also given to the lap. The width of the joint in the line of the rivets was 13 in., and three rivets were employed in all cases. Half the specimens experimented upon were made with a lap-joint, and the other half with a butt-joint and two cover-plates; the pitch of the rivets was 3 in. in the lap-joints, and $3\frac{1}{2}$ in. in the butt-joints.

"On the plates being tested by tension in Kirkaldy's machine, they all without exception tore through the rivet-holes, as in Fig. 6550. But the tensile strength per square inch of the area fractured was greatly below the strength of the plates, being only an average of 12·2 tons in the lap-joints and 13·2 tons in the butt-joints; and it follows therefore that the joints could not have yielded by fair tearing of the plates. The crippling action at the rivet-holes, which is now being inquired into, would injure and weaken the metal, until either the rivets forced themselves out of the plate, or the plate itself tore through the holes. The latter happened first in these experiments; but there is no reasonable ground for doubting that the ultimate cause of failure was the crippling of the metal in front of the rivets.

"In order to test the reality of this crippling action, similar specimens of all the three qualities of iron that had been used, and of both kinds of joint, were subjected to a total tensile strain of 36 tons on the 13 in. width, and the rivet-heads were afterwards planed off, so as to examine the dimensions of the holes. A slight but unmistakable elongation was found to exist in the direction of the strain, amounting to about $\frac{1}{250}$ in.; and taking into consideration that this is of the character of a set, and also bearing in mind the way in which the metal is grasped by the rivet-heads, and the support given by the surrounding plate, the amount of elongation appears quite sufficient to prove the existence of the crippling action. At the same time the ultimate tearing of the plates at the rivet-holes serves to show why this crippling has attracted so little notice; and that, when not carried so far as to result in tearing, it may still exist as a dangerous and unsuspected source of weakness in joints otherwise excellent.

"The mean value obtained from the experiments for the ultimate resistance to crippling of the plate, per square inch of the area of pressure in the rivet-holes, is 39·5 tons for the lap-joints, and 42·9 tons for the butt-joints. These show a very close agreement with the results previously obtained from the experiments with suspension-bridge links, which average 39·8 and 40·5 tons an inch. The resistance to crippling appears therefore to be very different from and independent of the tensile strength of the iron; and as a general result, 40 tons per inch may be taken as the strain that will cripple the plate, or the value for P in the equation."

Substituting these values of P and P′ in the equation, we find the value of d to be $2 \cdot 3\,t$, or about $2\frac{1}{4}$ times the thickness of the plate. In practice it is usual to make $d = 2\,t$, or the diameter of the rivet equals twice the thickness of the plate. The ordinary rule may thus, in the absence of more numerous experiments, be taken as sufficiently accurate.

We have now to determine the pitch, or distance of the rivets apart from centre to centre, so as to equalize the shearing strength of the rivets and the tensile strength of the plate. This question involves certain disputed points, and, as might be supposed, practice shows an absence of uniformity in this matter. The strength of the plate is equal to that of its sectional area between the rivet-holes. But what this strength is has not yet been determined with sufficient precision to set the question at rest. Experiments have proved beyond all doubt that the net area of the plate along the line of rivets is considerably weaker than an equal area of solid plate. The cause of this weakening has been attributed to the destructive action of the punch; and the advocates of drilling have relied chiefly upon this point in estimating the merits of the latter system. On the other hand, it has been contended on the faith of certain experiments, that a punched joint is as strong as a drilled joint, and that consequently drilling is as injurious as punching. Whatever the cause may be, however, it is certain, as we stated above, that the tensile strength of the net area is reduced by the existence of the rivet-holes, whether they are drilled or punched; and the question that remains is, does punching reduce the strength in a greater degree than drilling? It follows also from this fact that it is erroneous to assume, as is constantly done in practice, that the net area between drilled holes is equal in tensile strength to that of the solid plate. The only experiments, of which we are aware, that have been systematically carried out for the purpose of determining these questions, were made in America, and reported by a committee on boilers and boiler materials, to the American Railway Master Mechanics' Association. The following are the particulars of these experiments;—

Description.	Experiment Number.	How Broken.	Breaking Strain, lbs.	Unit Strain on Plate, tons a square inch.	Unit Strain on Rivet, tons a square inch.
Entire plate, $1\frac{3}{4}$ in. by $\frac{5}{16}$ in.	1	Torn across .	32,228	26·3	..
	2	Ditto	32,228	26·3	..
	3	Ditto	33,600	27·4	..
		Mean ..	32,685	26·7	..

TABLE—*continued.*

Description.	Experiment Number.	How Broken.	Breaking Strain, lbs.	Unit Strain on Plate, tons a square inch.	Unit Strain on Rivet, tons a square inch.
Plate 1¾ in. by ⅞ in.: with ¾-in. hole through middle, punched	1	Torn across .	13,371	17·0	..
	2	Ditto	13,371	17·0	..
	3	Ditto	13,714	17·4	..
		Mean ..	13,485	17·1	..
Plate 1¾ in. by ⅞ in., with ¾-in. hole through middle, drilled	1	Torn across .	17,828	22·6	..
	2	Ditto	17,485	22·2	..
	3	Ditto	17,622	22·4	..
		Mean ..	17,645	22·4	..
Two plates, each 1¾ in. by ⅞ in., punched, and riveted together with a ¾-in. rivet	1	Torn through centre of plate	17,828	22·6	25·9
	2	Ditto	17,828	22·6	25·9
	3	Ditto	17,143	21·8	24·9
		Mean ..	17,599	22·3	25·6
Two plates, each 1¾ in. by ⅞ in., drilled, and riveted together with a ¾-in. rivet	1	Rivet sheared	17,143	21·8	24·9
	2	Ditto	16,457	20·9	23·9
	3	Ditto	15,428	19·6	22·4
		Mean ..	16,342	20·8	23·8

It will be remarked that the tensile strength of the plate experimented upon was very high. Beyond this, the Table contains some very remarkable results. The existence of the drilled hole reduced the tensile strength of the effective area from 26·7 to 22·4 tons the square inch, or about 16 per cent., while in the case of the punched hole the reduction was from 26·7 to 17·1 tons, or about 36 per cent. When, however, the rivet was inserted, the strength of the punched joint was about equal to that of the plate with the drilled hole, while the strength of the drilled joint was considerably less. The increase of strength in the punched joint can only be attributed to the grip of the rivet-heads, while the reduction of strength in the drilled joint is obviously due to an increased tendency to shear the rivet. This result is considered by the committee as probably due to the edges of the drilled holes being sharper and more compact, and consequently more capable of shearing than the edges left by a punch. However this may be, the fact remains that practically the drilled joints were not so strong as the punched joints. The result which bears directly upon the question we are now considering is that which relates to the diminished strength of the metal between the rivet-holes. This is shown to be 16 per cent. for the drilled hole, and 36 per cent. for the punched hole. We cannot help believing that the punching in this case must have been carelessly performed, and that 36 does not fairly represent the average punched hole. We have already said that W. R. Browne considers the tensile strength of a punched iron plate to be reduced from 22 to 18 tons, and he makes the latter strength the basis of his calculations. It is probable, however, that 17 tons more nearly represents the truth. The equation for determining the pitch evidently is $\cdot 7854\, d^2\, P' = 2\, b\, t\, R$, R being the resistance to tearing in tons to the square inch, and b the breadth required on each side of the hole. Putting R = 17, we have $b = 5 \times \frac{d}{t} \times \cdot d$; and taking $d = 2\,t$, $b = d$. That is, the breadth on each side of the rivet-hole should be equal to the diameter of the rivet; or in a row of rivets, the pitch should be equal to 3 diameters. When the diameter of the rivets is less than twice the thickness of the plate, as it must necessarily be in the case of very thick plates, the pitch will be less; and if m be taken as the ratio of the diameter to the thickness, the space between the holes will be m times the diameter of the rivet.

The distance of the rivet from the end of the plate, or as it is termed the lap of the plate, is made equal to one diameter. This distance has been determined more by practical necessity than from theoretical considerations; and as joints rarely, if ever, fail in that direction, it may be assumed to be sufficient. The loss of a single-riveted joint is thus equal to three diameters. The proportions to which the preceding considerations have led us are thus;—diameter of rivet = twice the thickness of the plate; pitch = three diameters of rivet; and lap = three diameters of rivet. These proportions are represented in Figs. 6553, 6554. The proportional strength of such a joint is evidently $\frac{2}{8}$ of $\frac{17}{22}$ or 51½ per cent. of that of the solid plate.

The foregoing conclusions show that the single-riveted lap-joint is only half as strong as the solid plate, even when most perfectly designed; and the question for consideration now is—by what change in the mode of construction can the strength of the lap-joint be increased. The first expedient that suggests itself is to place the rivets in two rows, since by this means we increase the pitch without reducing the sectional area of the rivets. This expedient has been largely resorted to and the advantage which it offers is real and considerable. The pitch of the rivets in this case

will be double that requisite for single riveting, and our calculations showed us that in the latter case the pitch should equal three diameters. This, however, will not give the required equality between shearing and tensile strength. This equality is given by the equation $2(\cdot7854\,d^2\,P') = 2\,b\,t\,R$. Whence, with the preceding values, $b = 2\cdot02\,d$, and the pitch consequently equals 5 diameters. But as the rivet-holes are wider apart, the tensile strength of the plate is reduced in a proportionably less degree. Browne takes 19½ tons, instead of 17 as above, for the value of R in this case, which gives the pitch = 4½ diameters. Thus we have increased the number of rivets and consequently the cost; but we have increased the strength of the joint from $\frac{2}{3}$ of $\frac{17}{22} = 51\cdot5$ per cent., to $\frac{3\cdot5}{4\cdot5}$ of $\frac{19\cdot5}{22} = 69$ per cent. The proportion of the diameter of the rivets to the thickness of the plate will be the same as in single-riveted joints, as the strains are the same in both cases.

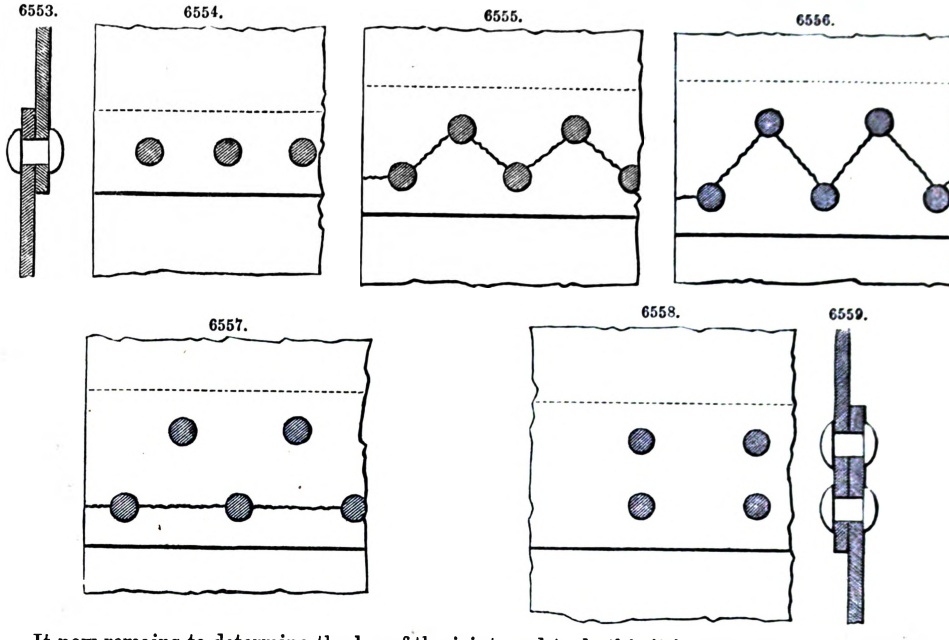

It now remains to determine the lap of the joint, and to do this it is necessary to ascertain what distance is required between the rows of rivets. Here again we find a want of uniformity in practice. The only experiments bearing directly on this matter are some made by Brunel, and described by W. R. Browne in the paper already referred to. Discussing the results of these experiments, he says, "In these the line of fracture in several cases was a zigzag, running backwards and forwards between the two rows of rivets, as in Figs. 6555, 6556; and this shows that the rows were too near together in those cases. As the effect of punching is to weaken the plate to some distance all round the punched hole, the result will be that in the space between any two successive holes in the straight line of rivets the plate is weakened to twice the distance that the punching affects, but in the zigzag line between the same two holes the plate is weakened to the extent of four times the same distance. Hence, though the zigzag line will always be the longer in itself, it may be really weaker than the straight line, if the two rows are near together. The proportion of the distance between the pitch lines to the pitch itself was respectively from 40 per cent. in Fig. 6555, to 62 per cent. in Fig. 6556, in the experiments in which the fracture took the zigzag line; but in another experiment, Fig. 6557, in which the proportion was as great as 67 per cent., the fracture took place in the straight line. It therefore seems safe to make the distance between the pitch lines 67 per cent., or ⅔rds of the pitch in zigzag riveting.

"In chain-riveting, however, the rivets in the second row being opposite those in the first row, as in Figs. 6558, 6559, are in the same position with respect to the first row as the rivets in a single-riveted joint to the edge of the lap. Hence by the same rule as before, the distance between the rivet-holes in the two rows will be one diameter, making the distance between the pitch lines 2 diameters; but as the plate between the holes will be injured at both sides by punching, it will be safer to make the distance 2½ diameters between the pitch lines. This gives the total lap 5½ diameters in chain-riveted joints, which agrees with the rules in use at Lloyd's."

In considering the case of thick plates, as in marine boilers, where the diameter of the rivets cannot be made twice the thickness of the plate, the proportion of 1½ times may first be taken; and substituting this value $d = 1\frac{1}{2}\,t$ in place of $d = 2\,t$ in the previous calculations, the results are Pitch = 3⅔ diam., Strength $\frac{19\cdot5}{22\cdot0} \times \frac{2\cdot66}{3\cdot66} = 64$ per cent. Taking next the diameter of rivet equal to the thickness of plate, the corresponding results are

$$\text{Pitch} = 2\tfrac{3}{4}\text{ diam., Strength } \frac{19\cdot5}{22\cdot0} \times \frac{1\cdot75}{2\cdot75} = 56 \text{ per cent.}$$

There is yet another mode of arranging the rivets, namely, in three rows; and the foregoing formulæ, when adapted to this case, give 4 diameters as the pitch of the middle row, and 8 diameters as the pitch of the outer rows. With these proportions, this triple riveting gives a strength of joint equal to 80 per cent. of the plates. We are soon stopped, however, in this direction by a practical difficulty, whenever a joint has to be made steam-tight. When the pitch is very wide, the plates are apt to spring under the calking tool. This difficulty of calking the joint has had great influence in checking the extension of the system of multiple riveting; and it is evident that further progress can be made only by effecting improvements in the methods of calking.

In butt-joints, a cover-strip is riveted to each plate, and this cover-strip may be placed on one side of the plates only, as in Figs. 6560, 6561, or on both sides, as in Figs. 6562, 6563. As we have previously said, when the cover is on one side only, the joint is virtually a lap-joint, and therefore the proportions found for this latter joint are equally applicable to the butt-joint. It is evident also that the butt-joint may be either single or double riveted, and it is equally evident that the thickness of the cover should be equal to that of the plates. If the cover-strips are double, the strain is equally divided between them, and therefore each strip should be half the thickness of the plate. In this case the rivets are in what is called double shear; that is, if they fail, they must do so by being sheared in two places. Consequently they offer a double shearing area, and hence the equation becomes $\cdot 7854\, d^2 \times 2\,P' = t\,d\,P$. The proportion of the diameter of the rivets to the thickness of the plate is thus $\frac{d}{t} = \frac{P}{1 \cdot 57\,P'}$. Whence we deduce $d = 1 \cdot 16\,t$, or the diameter of the rivet equal $1\frac{1}{6}$ times the thickness of the plate. The equation for the pitch becomes $\cdot 7854\, d^2 \times 2\,P' = 2\,b\,t\,R$, from which we find pitch $= 3\frac{1}{8}$ diameters. The proportions of lap will be the same as in the lap-joint, that is, there will be 3 diameters on each plate, making the total width of the covers equal to 6 diameters.

6560. 6561.

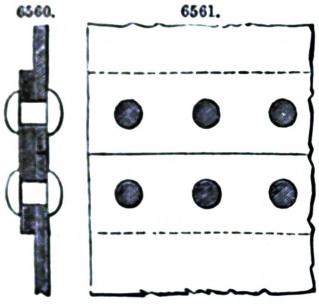

6562. 6563.

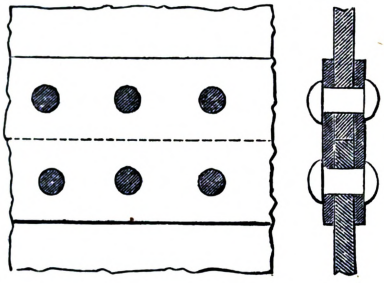

6564. 6565.

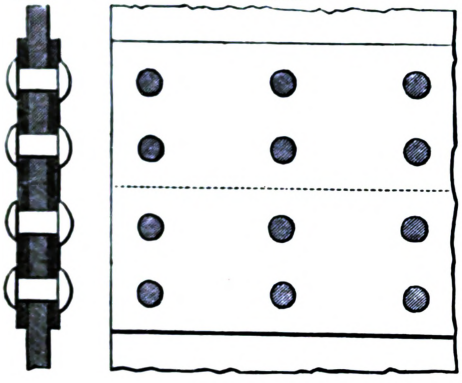

6566.

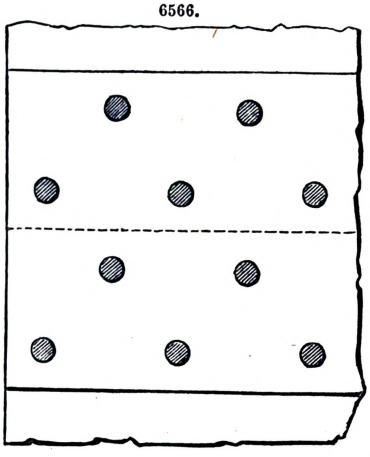

The proportionate strength of this joint, as compared with that of the solid plate, is $\frac{2\frac{1}{8}}{3\frac{1}{8}}$ of $\frac{17}{22} = 52\frac{1}{2}$ per cent.

When the cover-strips of a butt-joint are each double riveted, as in Figs. 6564 to 6566, the diameter of the rivets will be the same as in the single-riveted joints, namely, $1\frac{1}{8}$ the thickness of the plate; also, the distance between the two rows of rivets will be the same. Hence the width of the cover will be double the lap determined for the previous case, or for chain riveting, 11 diameters. The equation for the pitch is $2\,(\cdot 7854\, d^2 \times 2\,P') = 2\,b\,t\,R$, whence it will be found that the pitch $= 5\frac{1}{8}$ diameters; therefore, for zigzag riveting, the distance between the pitch lines being two-thirds of the pitch, we may take the width of the cover-strips as equal to 13 diameters.

The proportionate strength of this joint, as compared with that of the solid plate, is $\frac{4\frac{1}{8}}{5\frac{1}{8}}$ of $\frac{19\frac{1}{2}}{22} = 71$ per cent.

Other expedients have been resorted to for strengthening the seams of boilers. In a boiler, the strain upon the longitudinal joints is twice that upon the transverse joints, and it has been proposed to arrange the joints diagonally, as in Fig. 6567. If the angle of the joint be 45°, a simple calculation will show that the tension upon it is only four-fifths of that upon a longitudinal joint. Consequently the effective strength of the joint is increased in the ratio of 4 to 5. This is an advantage which should not be overlooked. Another mode of making the strength of the transverse and longitudinal joints equal is to thicken the edges of the plates, as shown in Figs. 6568, 6569.

6567.

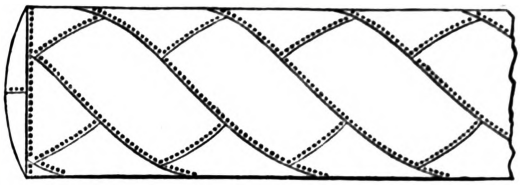

6568.

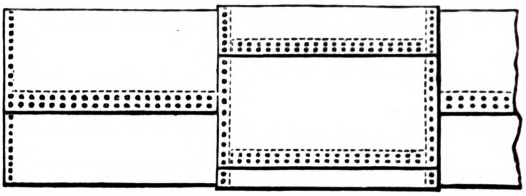

6569.

The following Tables show the proportions for riveted joints adopted in practice.

RULES FOR BOILER RIVETING.

Thickness of Plate.	Diameter of Rivet.	Length of Rivet from Head.	Pitch.	Lap in Single Joints.	Lap in Double Joints.	Equivalent Length of Head.
inch.	inch.	inches.	inches.	inches.	inches.	inch.
$\frac{3}{16}$	$\frac{3}{8}$	$\frac{7}{8}$	$1\frac{1}{4}$ to $1\frac{1}{2}$	$1\frac{1}{4}$	$2\frac{1}{16}$	$\frac{1}{2}$
$\frac{1}{4}$	$\frac{1}{2}$	$1\frac{1}{8}$	$1\frac{1}{2}$ „ $1\frac{3}{4}$	$1\frac{1}{2}$	$2\frac{1}{2}$	$\frac{5}{8}$
$\frac{5}{16}$	$\frac{5}{8}$	$1\frac{3}{8}$	$1\frac{5}{8}$ „ $1\frac{7}{8}$	$1\frac{7}{8}$	$3\frac{1}{8}$	$\frac{3}{4}$
$\frac{3}{8}$	$\frac{3}{4}$	$1\frac{5}{8}$	$1\frac{7}{8}$ „ $2\frac{1}{4}$	$2\frac{1}{4}$	$3\frac{3}{8}$	$\frac{7}{8}$
$\frac{1}{2}$	$1\frac{3}{16}$	$2\frac{1}{4}$	$2\frac{1}{8}$ „ $2\frac{3}{8}$	$2\frac{3}{8}$	$3\frac{3}{4}$	$1\frac{1}{4}$
$\frac{9}{16}$	$\frac{7}{8}$	$2\frac{1}{2}$	$2\frac{1}{4}$ „ $2\frac{1}{2}$	$2\frac{1}{2}$	$4\frac{1}{8}$	$1\frac{3}{8}$
$\frac{5}{8}$	$1\frac{5}{16}$	$2\frac{3}{4}$	$2\frac{1}{3}$ „ $2\frac{3}{4}$	$2\frac{3}{4}$	$4\frac{5}{8}$	$1\frac{1}{2}$
$\frac{11}{16}$	1	3	$2\frac{3}{4}$ „ 3	3	5	$1\frac{5}{8}$
$\frac{3}{4}$	$1\frac{1}{8}$	$3\frac{1}{4}$	3 „ $3\frac{1}{4}$	$3\frac{1}{4}$	$5\frac{7}{8}$	$1\frac{3}{4}$

LLOYD'S RULES FOR SHIP RIVETING.

Thickness of plates in inches	$\frac{5}{16}$	$\frac{6}{16}$	$\frac{7}{16}$	$\frac{8}{16}$	$\frac{9}{16}$	$\frac{10}{16}$	$\frac{11}{16}$	$\frac{12}{16}$	$\frac{13}{16}$	$\frac{14}{16}$	$\frac{15}{16}$	$\frac{16}{16}$	Rivets to be $\frac{1}{4}$ of an inch larger in diameter in the stem, stern-post and keel.
Diameter of rivets in inches	$\frac{5}{8}$			$\frac{3}{4}$			$\frac{7}{8}$			1			

"The rivets not to be nearer to the butts or edges of the plating, lining-pieces to butts, or of any angle-iron, than a space not less than their own diameter, and not to be farther apart from each other than four times their diameter, or nearer than three times their diameter, and to be spaced through the frames and outside plating; and in reversed angle-iron, a distance equal to eight times their diameter apart. The overlaps of plating, where double riveting is required, not to be less than five and a half times the diameter of the rivets; and where single riveting is admitted, to be not less in breadth than three and a quarter times the diameter of the rivets."

LIVERPOOL RULES FOR SHIP RIVETING.

Thickness of plate in inches	$\frac{5}{16}$	$\frac{6}{16}$	$\frac{7}{16}$	$\frac{8}{16}$	$\frac{9}{16}$	$\frac{10}{16}$	$\frac{11}{16}$	$\frac{12}{16}$	$\frac{13}{16}$	$\frac{14}{16}$	$\frac{15}{16}$	$\frac{16}{16}$
Diameter of rivets in inches	$\frac{8}{16}$	$\frac{10}{16}$	$\frac{10}{16}$	$\frac{12}{16}$	$\frac{12}{16}$	$\frac{13}{16}$	$\frac{14}{16}$	$\frac{14}{16}$	$\frac{15}{16}$	$\frac{16}{16}$	$\frac{17}{16}$	$\frac{18}{16}$
Breadth of lap in seams in inches .. — Single riveting	$1\frac{3}{4}$	$2\frac{1}{4}$	$2\frac{1}{4}$	$2\frac{3}{4}$	..	..	..	..	..	..	..	..
Breadth of lap in seams in inches .. — Double riveting	3	$3\frac{3}{4}$	$3\frac{3}{4}$	$4\frac{1}{2}$	$4\frac{1}{2}$	$4\frac{7}{8}$	$5\frac{1}{4}$	$5\frac{1}{4}$	$5\frac{5}{8}$	6	$6\frac{3}{8}$	$6\frac{3}{4}$
Breadth of butt-strip .. — Double riveting	$7\frac{1}{4}$	8	8	10	10	$10\frac{3}{4}$	$11\frac{1}{2}$	$11\frac{1}{2}$	$12\frac{1}{4}$	13	$13\frac{3}{4}$	$14\frac{1}{2}$
Breadth of butt-strip .. — Treble riveting	9	$11\frac{1}{2}$	$11\frac{1}{2}$	$13\frac{1}{2}$	$13\frac{1}{2}$	15	16	16	17	18	19	20

"Rivets to be 4 diameters apart from centre to centre, longitudinally in seams, and vertically in butts, except in the butts where treble riveting is required, where the rivets in the row farthest from the butt may be spaced 8 diameters apart from centre to centre. Rivets in framing to be eight times their diameter apart from centre to centre, and to be of the size required in the preceding Table. All double or treble riveting in butts of plates to be in parallel rows, or what is termed chain riveting. It is recommended that the necks of all rivets be bevelled under the head, so as to fill the countersink made in punching, and their heads should be no thicker than two-thirds of the diameter of the rivet."

See BOILER. CORROSION. MATERIALS OF CONSTRUCTION.

Works relating to Riveting;—Stoney (B. B.), 'Theory of Strains,' 8vo, 1873. Burgh (N. P.), 'A Treatise on Boilers and Boiler Making,' 4to, 1873. Fairbairn (Wm.), 'Useful Information for Engineers.'

ROADS. FR., *Routes*; GER., *Strassen*; ITAL., *Strada*; SPAN., *Caminos*.

There is a considerably greater diversity in the character and construction of ordinary roads than of those which are used solely by steam locomotives. Upon the latter there is but one description of traffic, that of wheeled vehicles, while upon the former the traffic is of a very miscellaneous kind. The general character of railways differs but little, whereas that of roads varies according to the purposes to which they are applied. Ordinary roads are of two principal types, namely, temporary and permanent roads.

Temporary Roads.—The first idea of a road is a path or track on which a foot-passenger can travel. In the American forests the trees are blazed or marked to show the direction. On the prairies men travel by compass or by the stars; or by watching their own shadows, or noting the direction of the wind. Successive travellers following the same route will tread down a forest path, which is the first step towards road-making. On such a road, rivers will be crossed by swimming or wading, or by rafts; or felled trees might be used on very narrow streams; while ranges of hills would be passed by following the beds of mountain torrents. The employment of animals necessitates the improvement of the roads. The footpaths are widened, the forest is cleared, rude bridges of logs are formed, or rafts made of wood, of empty vessels, or of inflated skins.

Suppose it is required to make a temporary road from one settlement to another in a wild unmapped country. If a traverse were run by compass and chain between the two places, and plotted on paper, the magnetic bearing of the one place from the other would be ascertained, and a straight line could be run between the two by means of the compass. If two flags are set up in the proper direction at some distance apart, then, by means of a third flag brought into line with the two former, a straight line could be run for many miles with a very slight deviation from accuracy. Where a compass is not available, a fire lighted at one place may, by its smoke, enable its direction to be seen from the other.

This line so run, and marked by a trench cut in the ground, will often be a practicable line for the road in a new country; if not, it will at any rate be a valuable guiding line towards which all deviations caused by various obstacles should return. The line so marked out should be cleared for a width of 10, 20, or 30 ft.; a ditch cut on either side to serve as a drain, and the earth excavated thrown in the centre of the road to assist the rain-water to run into the ditches. Inequalities of surface can then be levelled as far as possible. Small streams may be crossed by temporary bridges if wood is available; if not, their banks must be cut down, if necessary, to a gentle slope, so as to enable carts to pass where the stream is dry or nearly so, and such slopes, as well as the bottom of the stream, may be paved, if material is available.

The following is a description of a temporary road of this kind made over the dry bed of the Chenab River in the Punjab, and may be taken as a general example.

The total length for the roadway across the Chenab measures 10,600 running feet, of which 1350 ft. consist of a metalled road; 3500 ft. rest on firm soil, extending from the road embankment to within 1000 ft. of the south side of river, and the remaining 5800 ft. extend across entire sand.

The roadway consists of one layer of grass fascines, each fascine being 24 ft. long, 6 in. in diameter, and tightly bound with grass, packed closely together and covered with 6 in. of clay. On the surface of the clay, and to prevent its cutting into grooves, a very thin layer of loose grass is constantly maintained. An inch of clay is first laid down on the sand, all hollows are filled in and low points somewhat raised, that the foundation may not suffer from the lodgment of water. In other places the finished road is 1 or 2 in. above the sand.

Whatever improvements are made in such roads should be directed towards the most formidable obstacles at first; this is, indeed, self-evident, the strength of a road, as of a beam, being only that of its weakest part; but it is not always easy to determine what are the most formidable obstacles, nor whether it will be more economical to lay out a given sum in raising a portion of embankment, cutting down a hill, improving the surface, or building a bridge, but much of course will depend on the peculiar circumstances of each case.

Plank Roads.—Similarly to the trellis road used on the early railways in the United States, ordinary roads of a temporary character are sometimes constructed exclusively of timber, and are termed plank roads.

The method most generally adopted in constructing plank roads consists in laying a flooring, or track, 8 ft. wide, composed of boards from 9 to 12 in. in width, and 3 in. in thickness, which rest upon two parallel rows of sleepers, or sills, laid lengthwise in the road, and having their centre lines about 4 ft. apart, or 2 ft. from the axis of the road. Sills of various-sized scantling have been used, but experience seems in favour of scantling about 12 in. in width, 4 in. in thickness, and in lengths of not less than 15 to 20 ft. Sills of these dimensions, laid flatwise, and firmly imbedded, present a firm and uniform bearing to the boards, and distribute the pressure they receive over so great a surface, that, if the soil upon which they rest is compact and kept well drained, there can be but little settling and displacement of the road surface, from the usual loads passing over it. The better to secure this uniform distribution of the pressure, the sills of one row are so laid as to break

joints with the other, and to prevent the ends of the sills from yielding, the usual precaution is taken to place short sills at the joints, either beneath the main sills or on the same level with them.

The boards are laid perpendicular to the axis of the road, experience having shown that this position is more favourable to their wear and tear than any other, and is besides the most economical. Their ends are not in an unbroken line, but so arranged that the ends of every three or four project alternately, on each side of the axis of the road, 3 or 4 in. beyond those next to them, for the purpose of presenting a short shoulder to the wheels of vehicles, to facilitate their coming upon the plank surface, when from any cause they may have turned aside. On some roads, the boards have been spiked to the sills, but this is unnecessary, the stability of the boards being best secured by well packing the earth between and around the sills, so as to present, with them, a uniform bearing surface to the boards, and by adopting the usual precautions for keeping the subsoil well drained, and preventing any accumulation of rain-water on the surface. The boards for plank roads should be selected from timber free from the usual defects, such as knots and shakes, which would render it unsuitable for ordinary building purposes, as durability is an essential element in the economy of this class of structures. Boards of 3 in. in thickness offer all the requisites of strength and durability that can be obtained from timber in its ordinary state, in which it is used for plank roads.

Besides the wooden track of 8 ft., an earthen track of 12 ft. in width is made, which serves as a summer road for light vehicles, and as a turn-out for loaded ones; this, with the wooden track, gives a clear road surface of 20 ft., the least that can be well allowed for a frequented road. It is recommended to lay the wooden track on the right-hand side of the approach of a road to a town or village, for the proper convenience of the rural traffic, as the heavy trade is to the town. The surface of this track receives a cross slope from the side towards the axis of the road outwards of 1 in 32. The surface of the summer road receives a cross slope in the opposite direction of 1 in 16. These slopes are given for the purpose of facilitating a rapid surface drainage. The side drains are placed for this purpose parallel to the axis of the road, and connected with the road surface in a suitable slope.

Where, from the character of the soil, good summer roads cannot be had, it will be necessary to make wooden turn-outs, from space to space, to prevent the inconvenience and delay of miry roads. This can be effected by laying at these points a wooden track of double width to enable vehicles meeting, to pass each other. It is recommended to lay these turn-outs on four or five sills, to spring the boards slightly at the centre, and spike their ends to the exterior sills.

The angle of repose, by which the grade of plank roads should be regulated, has not yet been determined by experiment, but as the wooden surface is covered with a layer of clean sand, fine gravel, or tan bark, before it is thrown open to vehicles, and as it in time becomes covered with a permanent stratum of dust, it is probable that this angle will not materially differ from that on a road with a broken-stone surface, like that of M'Adam or of Telford, when kept in a thorough state of repair.

In some of the earlier plank roads made in Canada, a width of 16 ft. was given to the wooden track, the boards of which were laid upon four or five rows of sills. But experience soon demonstrated that this was not an economical plan, as it was found that vehicles kept the centre of the wooden surface, which was soon worn into a beaten track, whilst the remainder was only slightly impaired. This led to the abandonment of the wide track for the one now usually employed, which answers all the purposes of the traffic, and is much more economical, both in the first outlay and for subsequent renewals and repairs. The plank roads possess great advantages in a densely-wooded country, and will be found superior to every other kind as a temporary expedient.

Hill Roads.—The construction of hill roads, which are frequently of only a temporary character, although at times subsequently enlarged and improved so as to come under the other category, increases in difficulty with the quantity of timber met with in the district. Sometimes footpaths may exist, which, although mere tracks, will enable in some degree the nature of the ground to be rightly ascertained. The ordinary spirit-level is unsuited for the operation of surveying, or, as it is termed, tracing out, a hill road. It is too large, and requires a greater delicacy of adjustment and manipulation than can be given to it under the circumstances. The instrument represented in Figs. 6570 to 6572 is often employed in India for the purpose in question, and answers exceedingly well. It goes by the name of the Gunner's Quadrant, being, with a few modifications, a level for setting mortars at their proper angle. The long bar is fitted with sights at either end, and has a universal joint screwed on at its centre. The quadrant is reversed from the position it occupies in the mortar quadrant, having the arc turned inwards, and the radius outwards, towards the tracer. An armature, bearing a small spirit-level at its side, and a vernier to read minutes at one end, works on the arc, which, to enable the level to be used

6570.

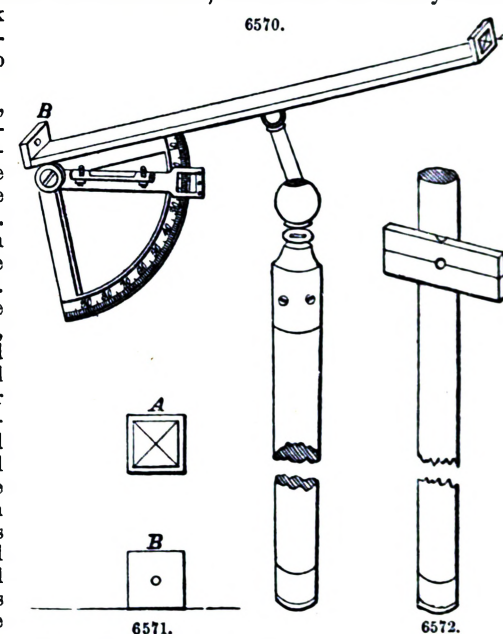

6571. 6572.

for tracing either up or down hill without reversion, has an excess arc of some 5° on the upper side of its zero point. The tracing quadrant is fixed to a light stick, shod with iron, of a length sufficient to bring the pin-hole of the sight within easy distance of the eye. The stick should not terminate in a point, or the levels will be vitiated. Its base ought to be about $1\frac{1}{2}$ in. in diameter. The forward staff is rather longer than the foregoing, but has a fixed vane, painted white, whose centre is exactly the same height from the ground as the pin-hole of the quadrant sight. The centre is denoted by a dot in the middle of a black horizontal line.

The tracer holds the instrument in his hand, having adjusted the armature by the scale and vernier to the angle of inclination suited to the slope of the ground. A slope of 1 in 20, corresponding to 2° 52′, or to within a few minutes of 3°, should be the maximum, except for temporary descent into water-courses, which may be 1 in 12, or 4° 45′. The holder of the forward staff goes on a few yards, and is signalled up or down, till the foot of it is resting on the line of the required slope. The tracer has no difficulty in observing the bubble of the level at the same moment as he watches the vane of the staff through the pin-hole sight and cross hairs, and as soon as properly placed, he orders a stake to be driven at its foot. He then moves up to the stake, and sends the staff-bearer forward to take up a fresh position, and so on till the line is staked in. A party follows to open out the line, and when it has been inspected and approved of, the road is finished to the full width, with a side drain.

This simple method of tracing is admirably suited to rough, undulating country, covered with forest, where an ordinary spirit-level cannot be easily carried about or set up, and where extreme accuracy is not imperative, as in the case of permanent roads. Even a practised eye cannot lay out a road on the hill-side that would not be found to depart widely from the uniform slope proposed, unless the instrument has been in hand all the time; eye traces, as they are termed, should therefore be proscribed, except on flattish ground, where the slavish following of the instrument is apt to lead to the marking of a tortuous line. If a cutting through a saddle or spur has to be made, it is usual to denote its commencement and end, by inserting two stakes instead of one, and at descents into streams, the same course must be observed. Great care should be exercised that the latter are formed with due regard to facility of passage, for many an excellent road-trace is marred by insurmountable difficulties at the steep banks of rivers, or headlong ramps.

6573.

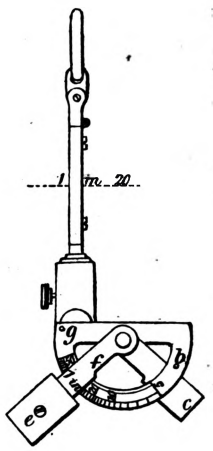

Another instrument used for the same purpose is De Lisle's clinometer, Fig. 6573, and represents the first instrument made. It is in two parts, separating at the dotted line in the figure. The lower part can be fitted on in three positions; for packing in its case, with the weight *e* to the left of the mirror; for descending slopes, with the arc and weight *e* behind the mirror; for ascending slopes, with the arc and weight *e* in front of the mirror.

In the more recent instruments, Figs. 6574 to 6578, the lower part does not draw off, but revolves on the axis of the mirror, and is retained in the required position by a small spring. The semi-circular arc has two radial bars, one *c*, light, the other, *f*, loaded with a weight *e*. For level set the bar *f* against the bar *g*, and bring the light bar *c* home in the groove formed for its reception in the weight *e*. For a slope of 1 in 50 leave *f* against *g*, and move the light bar *c* against the top *h*. For any other slope leave the bar *c* against the top *h*, and set the bevelled edge of bar *f* to the required division on the graduated limb of the arc; see Fig. 6576, where the instrument is set to 1 in 20.

6574. 6575. 6576. 6577. 6578.

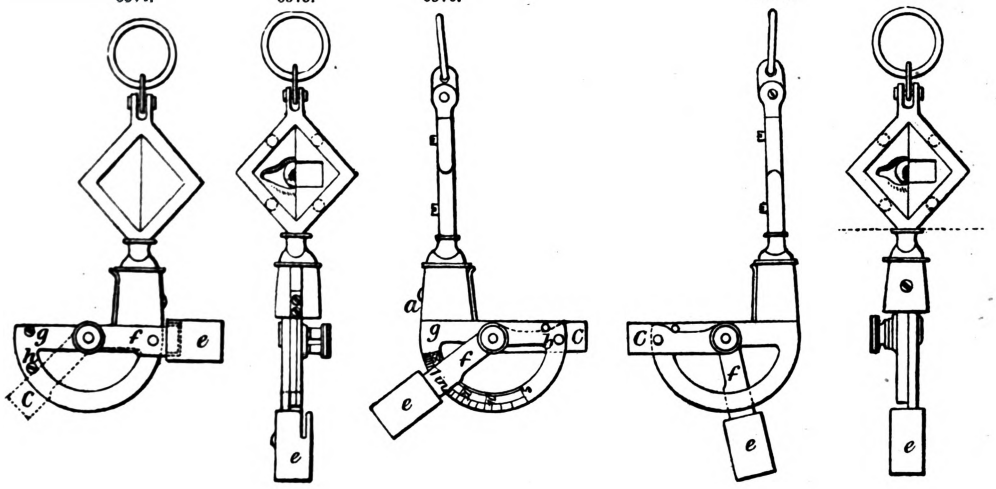

In practice it should be remembered that a flatter slope should be used in tracing than that intended for the finished road, in order to allow for the increased slope due to flattening the curves of

the line. Thus for a road at 1 in 20 the instrument should be set to 1 in 21 or 22, according to the nature of the ground. In using the instrument a levelling staff with sliding vane is convenient. The vane on the staff must be adjusted to the height of the observer's eye. The observer stands at the initial point of the trace, and sends an assistant forward with the staff to any convenient distance; the observer then holds the instrument up by the ring and makes his assistant move the staff up or down the slope of the hill until he gets the reflection of the pupil of his eye in the mirror and the vane to coincide. A stake is then driven in at the foot of the staff. The observer moves forward to this stake and sends his assistant on for the next station, and so on. In taking cross-sections of streams the instrument should be adjusted for level, and the vane on the staff moved up or down at each station until the requisite coincidence is obtained. The level is then read off on the staff and entered in the usual manner. In windy weather it may be convenient to suspend the instrument in a wooden box with sight holes. The box should be mounted on a light staff, and the vane on the levelling staff must be set to the height of the mirror. When the line is staked out and considered satisfactory, a gauge-path should be cut and the line surveyed either by theodolite or spirit-level for the plans and estimates.

The great advantage of this instrument will be found on lines along steep cliffs where a theodolite could not be taken without much risk of injury. It will also save the tedious labour of setting up and levelling a theodolite at numerous successive stations.

The reflecting level, a small instrument that can be put in the waistcoat-pocket, case and all, is a most useful little instrument for tracing out a line of road through the hills. The instrument itself, when drawn out to its full extent, does not exceed 6 in., and is little more than ½ in. in diameter. On the top of it is a small spirit-level, and inside the tube a reflector, so placed, that when looking through the instrument you can observe where the bubble is on the centre of the run, at which time the metal reflector shows just one-half of the air-bubble. The line of vision along the bottom of the reflector is a horizontal line, so that any point which the line intersects is level with the eye of the observer.

For selecting the general line of road, therefore, this instrument is most useful, as it enables you to select points of equal altitude with the point of observation, and thus, for the preliminary survey, it enables you to determine the general direction the road should take, and what points should be closed on.

Before, however, selecting a new line of road, certain points should be determined on, which will altogether depend on the object for which the road is intended. As, for example, if only for a foot-path the gradients may be as great as 1 in 5; a bridle-path, 1 in 7½; laden mules, say, 1 in 10; camels, 1 in 15; wheeled carriages, 1 in 25; and these gradients should never be exceeded.

The average gradients for the whole length of road where the great object is to ascend a hill would probably be, for footpath, 1 in 7½; horses, 1 in 10; mules, laden, 1 in 15; camels, 1 in 20; carts, 1 in 50. The advantage of not being confined to one particular gradient is manifest, as by a change in the gradient the muscles have a different action to perform, so there is not that one constant strain on them.

All that is required when tracing a line up-hill is a hill walking-staff of say 5 ft. in length. When the person engaged in the work is very tall it may be even 5½ ft. long. This staff should have an iron point to fix it firmly in the ground, so that the level which is attached to the top of it may be firmly supported. With a rope 50 ft. long, having a knot on it 37½ ft., and a hatchet for clearing away bush tangle, nothing more is required but stakes for staking out the line.

It is evident that, having an instrument looking along a horizontal line, if a point on the hill-side be fixed on the same level as that of the instrument, and 37½ ft. distant from it, the gradient is exactly 1 in 7½, and at 57 ft. 1 in 10, if measured from the top of the staff; but as this may not be convenient, allowance can be made for the extra length of the hypothenuse, but practically it is nothing, and may be left out. It may be said, therefore, that from 37½ to 50 ft. is the length of the tether when a bridle-road is to be traced out, and stakes driven at the same level as the instrument will give a gradient of 1 in 7½ at 37½ ft., so all that is required is to see the ground at these distances, or any distances between, to keep the gradient right while working up-hill. This, however, entails a good deal of clearing away bush, so it is better, if possible, to work down-hill. In this case a 10-ft. rod is required, double the height of the instrument, and all one has to do is to look at the top of the rod and see that it is at the proper level.

Where the gradients are less steep, the rope has simply to be lengthened; as, for example, where the gradient is to be 1 in 52, the length of rope must be 25 × 5 = 125 ft., and any distance beyond the 125 ft. must make the gradient less steep.

The stakes laid down are on the centre line of the intended road, and in order to open it out a strong line must be stretched from the one stake to the other. This allows of the gradient being worked to with sufficient accuracy.

Permanent Roads.—Selection of Route.—Suppose that it is desired to form a road between two distant towns, A and B, Fig. 6579, and let us, for the present, neglect altogether the consideration of the physical features of the intervening country, assuming that it is equally favourable whatever line we select. Now, at first sight, it would appear that under such circumstances a perfectly straight line drawn from one town to the other would be the best that could be chosen. On a more careful examination, however, of the locality, we may find that there is a third town, C, situated somewhat on one side of the straight line which we have drawn from A to B; and although our primary object is to connect only the two latter, that it would nevertheless be of considerable service if the whole of the three towns were put into mutual connection with each other. Now this may be effected in three different ways, any one of which might, under certain circumstances, be the best. In the first place, we might, as originally suggested,

6579.

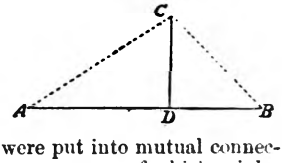

form a straight road from A to B, and, in a similar manner, two other straight roads from A to C, and from B to C, and this would be the most perfect way of effecting the object in view, the distance between any two of the towns being reduced to the least possible. It would, however, be attended with considerable expense, and it would be requisite to construct a much greater length of road than according to the second plan, which would be to form, as before, a straight road from A to B, and from C to construct a road which should join the former at a point D, so as to be perpendicular to it. The traffic between A or B and C would proceed to the point D, and then turn off to C. With this arrangement, while the length of the roads would be very materially decreased, only a slight increase would be occasioned in the distance between C and the other two towns. The third method would be to form only the two roads A C and C B, in which case the distance between A and B would be somewhat increased, while that between A and C, or B and C, would be diminished, and the total length of road to be constructed would also be lessened.

As a general rule it may be taken, that the last of these methods is the best, and most convenient for the public, that is to say, that if the physical character of the country does not determine the course of the road, it will generally be found best not to adopt a perfectly straight line, but to vary the line so as to pass through all the principal towns near its general course. According to the first arrangement, any vehicles established to convey passengers or goods between the two terminal towns would pass through all those which were intermediate, while, if the straight line and branch-road system were adopted, it would be requisite also to have a branch service to meet the service on the main line.

In laying out a road in an old country which has been long inhabited, and in which the position of the various towns requiring road accommodation is already determined, we are left less at liberty in the choice and selection of the line of road, and must be guided in that choice by different considerations to those which would determine the line of a road made through a new country, where the only object is to establish the easiest and best road between two distant stations. In the first case we should take into consideration the position of the various towns and other inhabited districts situated near the intended road, and its course would be, to a certain extent, controlled thereby; while, in the second case, we should simply examine the physical characters of the country, and base all our proceedings on the result. Whichever of these two cases, however, may have to be dealt with, in the ultimate selection and adoption of the line of road between those points which are fixed by other circumstances, the same careful examination of the physical character of the country should be made, and the same principles should control the choice.

A very good idea of the best direction for a road may be obtained by laying out a series of preliminary lines, as in Fig. 6580. Let A B be a portion of the intended line, and C C the breadth of country under consideration. At any suitable distances select stations S S S, their distances apart depending on the changes of level, and let the principal line A B, and also the cross lines C C, C C, Fig. 6580, be accurately levelled, and then drawn, on the plan of the line of the road. If the distance C C is required to be considerable, perhaps an additional line in the principal direction may be necessary. The etched lines show the form of the surface at the lines A B, C C on the plan of the latter being sections at right angles to A B, there is no difficulty in seeing the extent of cutting or of embankment that may be avoided by varying the position of the intended line. A plan of this description to a person conversant with sections is as good as a model of the country. In selecting the line for a permanent road, useless ascents should be avoided as much as possible, that is, ascending where a subsequent descent must be made, and the reverse. When a line of road is encumbered with numerous and extensive useless ascents, the wasteful expenditure of power in the conveyance of goods is very great, as the number of feet actually ascended is increased many times more than is necessary, if such height, when once gained, were not lost again. As one instance, amongst others, of the serious injury which the public sustains by this system of road-making, the road between London and Barnet may be mentioned, on which the total number of perpendicular feet that a horse must now ascend, is upwards of 1300, although Barnet is only 500 ft. higher than London, and in going from Barnet to London, a horse must ascend 800 ft., although London is 500 ft. lower than Barnet. Another instance of this defect in road engineering is observable in the line of the old road across the Island of Anglesea, on which a horse was obliged to ascend and descend 1283 perpendicular feet more than was found necessary by Telford when he laid out the present new line, as shown by the annexed Table;—

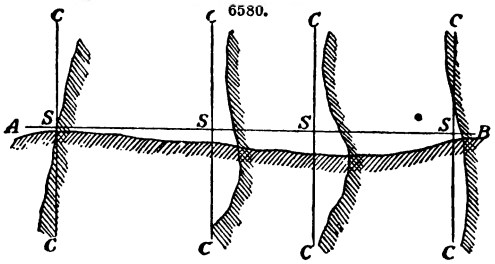

	Height of Summit above High Water.	Total Rise and Fall.	Length.
			miles. yards.
Old road	339	3540	24 428
New road	193	2257	21 1596
Difference	146	1283	2 592

In choosing the best direction for a line of roadway, the rate of inclination which can be obtained, with a moderate outlay of capital in cuttings and embankments, is a consideration of greater importance than the mere maintaining of a direct line.

Gradients and Tractive Resistance.—In the case of an ordinary metalled road the maximum gradient is fixed by two considerations, one relating to the power expended in ascending, the other to the acceleration in descending the incline.

The ascent should not be so steep as to prevent the horses taking up the full load which they can draw on the level. Now a horse will exert for a short time twice the average tractive pull which he can exert continuously throughout a day's work. Hence, so long as the resistance on the gradient is not more than double the resistance on the level, the horse will be able to take up the full load which he is capable of drawing. If the resistance to traction on metalled roads is taken at one-thirtieth of the load on the wheels, then the maximum gradient should not exceed 1 in 30; because on that slope the gradient resistance is equal to the resistance on the level, and the total resistance exactly doubled.

Again, in regard to descending, it may be assumed that the slope should not be so great that the gravity acting down the slope should exceed the resistance to traction, because in that case the carriages or wagons would tend to accelerate in velocity under the action of gravity alone, and brakes would have to be used to control the descent, causing a waste of work in friction. This consideration again fixes the maximum gradient desirable on metalled roads at 1 in 30. For a short distance, steeper gradients of 1 in 20 and 1 in 15 may be adopted with economy, but their number should be as few as possible.

Wheel-carriages and sledges are the vehicles capable of plying on roads. The latter are only suitable for roads in which the surface is either too soft or too steep to admit of the use of the other description. The tractive resistance of sledges has not been accurately ascertained. It is stated by Kossak that the resistance of an iron-shod sledge on hardened snow is about one-thirtieth of the gross load. The resistance of wheel-carriages on roads consists of a constant quantity and a quantity increasing with the velocity of transit. Putting R for the radius of the wheels in inches, V for the velocity in feet per second, A and B for the two constants, we have for F, the proportion to the gross load, $F = \frac{\{A + B(V - 3{\cdot}28)\}}{R}$. When the carriages are on springs F, for wheels of 18 in. diameter, and V equals 14·67 and 7·33 respectively, the values for A are 0·4 to 0·55 for good broken stone roads and 0·27 to 0·39 for pavements. The corresponding values for B are 0·025 and 0·068 to 0·03. When V has a value of 14·67 that of F is for roads of broken stone 0·038 to 0·046, and for pavements 0·060 to 0·041. When V = 7·33, F has values of 0·028 to 0·036, and 0·030 to 0·028. When the carriages have no springs, the value of the constant B is 3·5 that for carriages with springs. Table I. is deduced from experiments made by John Macneill.

TABLE I.

	F.
Stone pavement	0·015
Broken-stone road on firm foundation	0·020
Broken-stone road on flint foundation	0·029
Gravel road	0·067
Soft sandy and gravelly ground	0·143

If W be the greatest gross load to be conveyed, S the sine of the angle of the inclination of the gradient, then the maximum resistance will equal W (F + S). If P be the greatest tractive force which can be exerted in ascending the gradient, then we have P not less than W (F + S), or S should not be greater than $\frac{P}{W} - F$. This condition is essential, and fixes the inclination of the ruling gradient.

The following are the general results of the experiments made by Morin upon this subject;—

1st. The traction is directly proportional to the load, and inversely proportional to the diameter of the wheel.

2nd. Upon a paved or hard macadamized road, the resistance is independent of the width of the tire, when it exceeds from 3 to 4 in.

3rd. At a walking pace the traction is the same, under the same circumstances, for carriages with springs and without them.

4th. Upon hard macadamized and upon paved roads, the traction increases with the velocity; the increments of traction being directly proportional to the increments of velocity above the velocity 3·28 ft. a second, or about 2¼ miles an hour. The equal increment of traction thus due to each equal increment of velocity is less as the road is more smooth, and the carriage less rigid or better hung.

5th. Upon soft roads of earth, or sand, or turf, or roads fresh and thickly gravelled, the traction is independent of the velocity.

6th. Upon a well-made and compact pavement of hewn stones, the traction at a walking pace is not more than three-fourths of that upon the best macadamized roads under similar circumstances, and at a trotting pace it is equal to it.

7th. The destruction of the road is in all cases greater, as the diameters of the wheels are less, and it is greater in carriages without than with springs.

The general results obtained by John Macneill are given in the following Table, the numbers in which exhibit the tractive force requisite to move a weight of a ton under ordinary circumstance, at a very low velocity upon the several kinds of road mentioned.

TABLE II.

Description of Road.	Force, in lbs., required to move a ton.
On a well-made pavement	33
On a road made with 6 in. of broken stone of great hardness, laid either on a foundation of large stones, set in the form of a pavement, or upon a bottoming of concrete	46
On an old flint road, or a road made with a thick coating of broken stone, laid on earth	65
On a road made with a thick coating of gravel, laid on earth	147

Macneill has also given the following formulæ for calculating the resistance to traction on various kinds of roads. They have been deduced from a considerable number of experiments made on the different kinds of road specified below, with carriages moving at various velocities. Putting R for the force required to move the carriage, W the weight of the carriage, w that of the load, all expressed in pounds, v the velocity in feet a second, and c a constant number, which depends upon the surface over which the carriage is drawn, and the value of which for several different kinds of roads is as follows;—

On a timber surface	$c = 2$
On a paved road	$c = 2$
On a well-made broken-stone road, in a dry, clean state	$c = 5$
On a well-made broken-stone road, covered with dust	$c = 8$
On a well-made broken-stone road, wet and muddy	$c = 10$
On a gravel or flint road, in a dry, clean state	$c = 13$
On a gravel or flint road, in a wet and muddy state	$c = 32$

We have, in the case of a common stage wagon, $R = \frac{W + w}{93} + \frac{w}{40} + cv$; and in the case of a stage coach, $R = \frac{W + w}{100} + \frac{w}{40} + cv$.

As an example. What force would be required to move a stage coach weighing 2060 lbs., and having a load of 1100 lbs., at a velocity of 9 ft. a second along a broken-stone road covered with dust?

Here we have $\frac{2060 + 1100}{100} + \frac{1100}{40} + 8 \times 9 = 131{\cdot}1$ lbs. for the force required.

We may now consider the additional resistance which is occasioned when the road, instead of being level, is inclined in a greater or less degree. In order to simplify the question, let us suppose the whole weight to be supported on one pair of wheels, and that the tractive force is applied in a direction parallel to the surface of the road. On this supposition let A B in Fig. 6581 represent a portion of the inclined road, C being a carriage just sustained in its position by a force acting in the direction C D. It is evident that the carriage is kept in its position by three forces, namely, by its own weight W acting in the vertical direction C F, by the force F applied in the direction C D, parallel to the surface of the road, and by the pressure P which the carriage exerts against the surface of the road acting in the direction C E, perpendicular to the same. To determine the relative magnitude of these three forces, draw the horizontal line A G, and the vertical one B G; then, since the two lines C F and B G are parallel, and are both cut by the line A B, they must make the two angles C F B and A B G equal; also the two angles C E F and A G B are equal, being both right angles; therefore the remaining angles F C E and B A G are equal, and the two triangles C F E and A B G are similar. And as the three sides of the former are proportional to the three forces by which the carriage is sustained, so also are the three sides of the latter, namely, A B, or the length of the road is proportional to W, or the weight of the carriage B G, or the vertical rise in the same to F, or the force required to sustain the carriage on the incline, and A G on the horizontal distance in which this rise occurs to P, or the force with which the carriage presses upon the surface of the road.

6581.

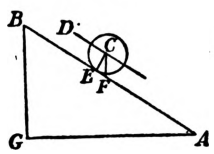

We have therefore W : A B :: F : G B, and W : A B :: P : A G. And if we give to A G such a value that the vertical rise of the road is exactly 1 ft., we shall have

$$F = \frac{W}{AB} = \frac{W}{\sqrt{AG^2 + 1}} = W \cdot \sin.\beta, \text{ and } P = \frac{W \cdot AG}{AB} = \frac{W \cdot AG}{\sqrt{AG^2 + 1}} = W \cdot \cos.\beta,$$

in which β is the angle B A G.

Example.—What is the force required to sustain a carriage weighing 3270 lbs. upon a road, the inclination of which is 1 in 30, and what is the pressure of the same upon the surface of the road?

Here the horizontal length of the road A G being 30, the inclined length $AB = \sqrt{AG^2 + 1}$ is 30·017, and we have, by the first rule, $3270 \div 30{\cdot}017 = 108{\cdot}93$ lbs. for the force required to sustain the carriage on the road; and, by the second rule, $(3270 \times 30) \div 30{\cdot}017 = 3269{\cdot}9$ lbs. for the pressure of the carriage upon the surface of the road.

Since the pressure of a carriage on a sloping road is found by multiplying its weight by the horizontal length of the road, and dividing by the inclined length, and as the former is always less than the latter, it follows that the force with which a carriage bears upon an inclined road is less

than its actual weight, as will be seen in the foregoing example, in which it is about 2 lbs. less. Unless the inclination is very steep, it is not necessary to calculate the pressure, which may be assumed to be equal to the weight of the carriage.

If R expresses the resistance which has to be overcome in moving any particular carriage at a given rate upon a horizontal road, then $R \times F$ will be the resistance upon ascending a hill, and $R - F$ upon descending a hill, with the same velocity, in both cases neglecting the decrease in the weight of the carriage produced by the inclination of the road. Taking, however, this decrease into consideration, the following modification in the formulæ will be requisite to adapt them to an inclined road; $R = \left(\frac{W + w}{93} + \frac{w}{40}\right) . \cos. \beta \mp (W + w) . \sin. - \beta + c v^2$. in the case of a common stage wagon, and in that of a stage coach, $R = \left(\frac{W + w}{100} + \frac{w}{40}\right) . \cos. \beta \mp (W + w) . \sin. \beta + c v^2$. the upper sign being taken when the vehicle is drawn down the incline, and the lower when it is drawn up the same.

Neglecting the decrease in the weight of the carriage, in order to ascertain the resistance in passing up or down a hill, we have only to calculate by the rule already given the resistance on a level road, to which, if the carriage ascends the hill, we must add, or if it descends, subtract, the force requisite to sustain the carriage on the inclined road, calculated by the proper rule. The sum or difference, as the case may be, will express the resistance required.

As an example, let us take, as before, the case of a stage coach weighing 2060 lbs., besides a load of 1100 lbs., and having to be moved at a velocity of 9 ft. a second along a broken-stone road whose surface is covered with dust, and inclined at the rate of 1 in 30.

Then the force to sustain the coach on this slope will be $\frac{3160}{30} = 105{\cdot}3$ lbs., which, added to the force already found as being requisite to move the same coach on a level road, will be

$$(105{\cdot}3 + 131{\cdot}1 =) \; 236{\cdot}4 \text{ lbs.}$$

for the force required to move the coach with a velocity of 9 ft. a second up an inclination of 1 in 30; and subtracted from the same, will be $(131{\cdot}1 - 105{\cdot}3 =) \; 25{\cdot}8$ lbs., the force required to move the coach with the same velocity down the same inclination.

The same example worked by the formula will give

$$\left(\frac{2060 + 1100}{100} + \frac{1100}{40}\right) {\cdot}9995 + (2060 + 1100) \; {\cdot}0333 + 8 \times 9 = 236{\cdot}3 \text{ lbs.}$$

when the carriage is drawn up the incline, and

$$\left(\frac{2060 + 1100}{100} + \frac{1100}{40}\right) {\cdot}9995 - (2060 + 1100) \; {\cdot}0333 - 8 \times 9 = 25{\cdot}84 \text{ lbs.}$$

when the carriage is drawn down the incline, the result being the same as that given by the rule.

Table III. has been calculated in order to show with sufficient exactness for most practical purposes the force required to draw carriages over inclined roads, and the comparative advantage of such roads and those which are perfectly level. The first column expresses the rate of inclination, and the second the equivalent angle; the two next columns contain the force requisite to draw a common stage wagon weighing with its load 6 tons, at a velocity of 4·4 ft. a second, or 3 miles an hour, along a macadamized road in its usual state, both when the hill ascends and when it descends; the fifth and sixth columns contain the length of level road which would be equivalent to a mile in length of the inclined road; that is, the length which would require the same mechanical force to be expended in drawing the wagon over it as would be necessary to draw it over a mile of the inclined road; the four next columns contain the same information as the four last described, only with reference to a stage coach supposed to weigh with its load 3 tons, and to travel at the rate of 8·8 ft. a second, or 6 miles an hour.

TABLE III.

Rate of Inclination.	Angle with the horizon.	For a Stage Wagon.				For a Stage Coach.			
		Force required to draw the wagon *up* the incline.	Force required to draw the wagon *down* the incline.	Equivalent length of level road for an *ascending* wagon.	Equivalent length of level road for a *descending* wagon.	Force required to draw the coach *up* the incline.	Force required to draw the coach *down* the incline.	Equivalent length of level road for an *ascending* coach.	Equivalent length of level road for a *descending* coach.
	° ′ ″	lbs.	lbs.	miles.	miles.	lbs.	lbs.	miles.	miles.
1 in 600	0 5 44	286	241	1·085	·9150	373	350	1·030	·9690
„ 575	0 5 59	287	240	1·088	·9116	373	350	1·032	·9676
„ 550	0 6 15	288	239	1·093	·9074	374	349	1·033	·9662
„ 525	0 6 33	289	238	1·097	·9029	374	349	1·035	·9646
„ 500	0 6 53	291	237	1·102	·8979	375	348	1·037	·9629
„ 475	0 7 14	292	235	1·107	·8926	376	347	1·039	·9605
„ 450	0 7 38	294	234	1·113	·8869	377	347	1·041	·9588
„ 425	0 8 5	295	232	1·120	·8801	377	346	1·043	·9563
„ 400	0 8 36	297	230	1·128	·8725	378	345	1·046	·9535
„ 375	0 9 10	300	228	1·136	·8642	380	344	1·049	·9505
„ 350	0 9 49	302	225	1·146	·8543	381	342	1·053	·9469

TABLE III.—*continued.*

Rate of inclination.	Angle with the horizon.	For a Stage Wagon.				For a Stage Coach.			
		Force required to draw the wagon *up* the incline.	Force required to draw the wagon *down* the incline.	Equivalent length of level road for an *ascending* wagon.	Equivalent length of level road for a *descending* wagon.	Force required to draw the coach *up* the incline.	Force required to draw the coach *down* the incline.	Equivalent length of level road for an *ascending* coach.	Equivalent length of level road for a *descending* coach.
	° ′ ″	lbs.	lbs.	miles.	miles.	lbs.	lbs.	miles.	miles.
1 in 325	0 10 35	305	222	1·157	·8433	382	341	1·056	·9430
„ 300	0 11 28	309	219	1·170	·8301	384	339	1·061	·9381
„ 290	0 11 51	310	217	1·176	·8245	385	338	1·064	·9358
„ 280	0 12 17	312	216	1·182	·8179	386	338	1·066	·9336
„ 270	0 12 44	314	214	1·189	·8111	386	337	1·068	·9314
„ 260	0 13 13	315	212	1·196	·8039	387	336	1·071	·9286
„ 250	0 13 45	317	210	1·204	·7963	388	335	1·074	·9259
„ 240	0 14 19	320	208	1·212	·7876	390	334	1·077	·9226
„ 230	0 14 57	322	205	1·222	·7785	391	332	1·080	·9192
„ 220	0 15 37	325	203	1·232	·7683	392	331	1·084	·9156
„ 210	0 16 22	328	200	1·243	·7573	394	330	1·088	·9115
„ 200	0 17 11	331	197	1·255	·7451	395	328	1·092	·9071
„ 190	0 18 6	334	193	1·268	·7319	397	326	1·097	·9024
„ 180	0 19 6	338	189	1·283	·7171	399	324	1·103	·8968
„ 170	0 20 13	343	185	1·300	·7004	401	322	1·109	·8908
„ 160	0 21 29	348	180	1·319	·6814	404	320	1·116	·8839
„ 150	0 22 55	353	174	1·341	·6587	406	317	1·123	·8761
„ 140	0 24 33	360	168	1·364	·6359	410	314	1·132	·8673
„ 130	0 26 27	367	160	1·392	·6079	413	310	1·142	·8573
„ 120	0 28 39	376	152	1·425	·5752	418	306	1·154	·8451
„ 110	0 31 15	386	142	1·451	·5491	423	300	1·169	·8308
„ 100	0 34 23	398	129	1·510	·4903	429	294	1·185	·8142
„ 95	0 86 11	405	122	1·537	·4634	432	291	1·195	·8045
„ 90	0 38 12	413	114	1·566	·4338	436	287	1·206	·7937
„ 85	0 40 27	422	106	1·600	·4004	441	282	1·219	·7801
„ 80	0 42 58	432	96	1·637	·3629	446	278	1·232	·7677
„ 75	0 45 51	443	85	1·680	·3204	451	272	1·247	·7522
„ 70	0 49 7	456	72	1·728	·2719	457	266	1·265	·7345
„ 65	0 52 54	470	57	1·784	·2161	465	258	1·285	·7143
„ 60	0 57 18	488	40	1·850	·1505	474	250	1·309	·6903
„ 55	1 2 30	508	19	1·926	·0736	484	239	1·337	·6620
„ 50	1 8 6	533	..	2·019	..	496	227	1·371	·6283
„ 45	1 16 24	562	..	2·133	..	511	212	1·412	·5871
„ 40	1 25 57	600	..	2·274	..	530	194	1·464	·5354
„ 35	1 38 14	648	..	2·456	..	554	170	1·530	·4690
„ 34	1 41 8	659	..	2·499	..	559	164	1·546	·4535
„ 33	1 44 12	671	..	2·544	..	565	158	1·562	·4370
„ 32	1 47 27	684	..	2·593	..	572	152	1·580	·4193
„ 31	1 50 55	697	..	2·644	..	578	145	1·599	·4007
„ 30	1 54 37	712	..	2·699	..	586	138	1·619	·3805
„ 29	1 58 34	727	..	2·758	..	593	130	1·640	·3592
„ 28	2 2 5	744	..	2·820	..	602	122	1·663	·3363
„ 27	2 7 2	762	..	2·888	..	610	113	1·688	·3119
„ 26	2 12 2	781	..	2·960	..	620	103	1·714	·2854
„ 25	2 17 26	801	..	3·038	..	630	93	1·743	·2566
„ 24	2 23 10	823	..	3·120	..	641	82	1·774	·2257
„ 23	2 29 22	847	..	3·213	..	653	69	1·808	·1919
„ 22	2 36 10	874	..	3·313	..	666	56	1·844	·1554
„ 21	2 43 35	903	..	3·423	..	681	42	1·884	·1150
„ 20	2 51 21	933	..	3·538	..	696	26	1·926	·0730
„ 19	3 0 46	970	..	3·677	..	714	8	1·977	·0221
„ 18	3 10 47	1009	..	3·826	..	734	..	2·032	..
„ 17	3 21 59	1053	..	3·991	..	756	..	2·092	..
„ 16	3 34 35	1102	..	4·178	..	780	..	2·160	..
„ 15	3 48 51	1157	..	4·388	..	807	..	2·234	..
„ 14	4 5 14	1221	..	4·629	..	839	..	2·322	..
„ 13	4 23 56	1294	..	4·906	..	875	..	2·423	..
„ 12	4 45 49	1379	..	5·229	..	918	..	2·540	..
„ 11	5 11 40	1480	..	5·611	..	968	..	2·679	..
„ 10	5 42 58	1600	..	6·067	..	1028	..	2·846	..
„ 9	6 20 25	1747	..	6·623	..	1101	..	3·048	..
„ 8	7 7 30	1929	..	7·315	..	1192	..	3·300	..
„ 7	8 7 48	2162	..	8·199	..	1308	..	3·621	..

The foregoing Table may be considered as affording a view of the comparative disadvantage of hilly roads with light and heavy traffic. The stage wagon, weighing 6 tons, and travelling at the speed of 3 miles an hour, may be taken as a fair average for goods traffic, and the stage coach, weighing 3 tons, and running 6 miles an hour, for passenger traffic. From the Table we perceive that hills act much more unfavourably on the former than on the latter. The force which would be requisite to move the wagon on a level road would be 264 lbs., and that to move the coach 362 lbs., being an excess of 98 lbs. for the traction of the coach; but with a road inclined at the rate of 1 in 600, this excess is only (373 − 286) = 87 lbs., and when the inclination of the road amounts to about 1 in 70 the forces required to draw them become equal. As the inclination of the road increases beyond this, the excess of the force requisite to draw the wagon over that necessary to move the coach increases rapidly, until, at an inclination of 1 in 7, it amounts to (2162 − 1308) = 854 lbs.

If we compare the forces required to draw either the wagon or coach up and down any given incline, we shall find that the former is as much greater than the force required on a level road as the latter is less than the same. It might thence be concluded that in the case of a vehicle passing alternately along the road, no real loss would be occasioned by the inclination of the road, since as much power would be gained in the descent of the hill as was lost in its ascent. Such is not, however, practically the fact, for while the inclinations of the road render it necessary in the ascending journey to have either a greater number or more powerful horses than would be requisite if the road were entirely level, no corresponding reduction can be made in the descending journey, as there must be horses sufficient to draw the vehicle along the level portions of the road.

TABLE IV.

Gradient.	Vertical rise in a mile.	Vertical rise in a chain.	Angle θ which gradient makes with the horizontal.	Sine of angle θ.	Gradient.	Vertical rise in a mile.	Vertical rise in a chain.	Angle θ which gradient makes with the horizontal.	Sine of angle θ.
			° ′ ″					° ′ ″	
1 in 10	528·0	6·60	5 42 58	·09960	1 in 60	88·0	1·10	0 57 18	·01667
„ 11	480·0	6·00	5 11 40	·09054	„ 65	81·2	1·02	0 52 54	·01539
„ 12	440·0	5·50	4 45 59	·08309	„ 70	75·4	·94	0 49 7	·01429
„ 13	406·1	5·08	4 23 56	·07670	„ 75	70·4	·88	0 45 51	·01334
„ 14	377·1	4·71	4 5 14	·07128	„ 80	66·0	·82	0 42 58	·01250
„ 15	352·0	4·40	3 48 51	·06652	„ 85	62·1	·78	0 40 27	·01177
„ 16	330·0	4·12	3 34 35	·06238	„ 90	58·7	·69	0 38 12	·01111
„ 17	310·6	3·88	3 21 59	·05872	„ 95	55·6	·69	0 36 11	·01053
„ 18	293·3	3·67	3 10 47	·05547	„ 100	52·8	·66	0 34 23	·01000
„ 19	277·9	3·47	3 0 46	·05256	„ 110	48·0	·60	0 31 15	·00909
„ 20	264·0	3·30	2 51 21	·04982	„ 120	44·0	·55	0 28 39	·00833
„ 21	251·4	3·14	2 43 35	·04757	„ 130	40·6	·51	0 26 27	·00769
„ 22	240·0	3·00	2 36 10	·04541	„ 140	37·7	·47	0 24 33	·00714
„ 23	229·6	2·87	2 29 22	·04344	„ 150	35·2	·44	0 22 55	·00666
„ 24	220·0	2·75	2 23 10	·04163	„ 160	33·0	·41	0 21 29	·00625
„ 25	211·2	2·64	2 17 26	·03997	„ 170	31·1	·39	0 20 13	·00588
„ 26	203·1	2·54	2 12 2	·03840	„ 180	29·3	·37	0 19 6	·00556
„ 27	195·5	2·42	2 7 2	·03694	„ 190	27·8	·35	0 18 6	·00527
„ 28	188·5	2·36	2 2 5	·03551	„ 200	26·4	·33	0 17 11	·00500
„ 29	182·1	2·28	1 58 34	·03448	„ 210	25·1	·31	0 16 22	·00476
„ 30	176·0	2·20	1 54 37	·03333	„ 220	24·0	·30	0 15 37	·00454
„ 31	170·3	2·13	1 50 55	·03226	„ 230	23·0	·29	0 14 57	·00435
„ 32	165·0	2·06	1 47 27	·03125	„ 240	22·0	·27	0 14 19	·00417
„ 33	160·0	2·00	1 44 12	·03031	„ 250	21·1	·26	0 13 45	·00400
„ 34	155·3	1·94	1 41 8	·02941	„ 260	20·3	·25	0 13 13	·00385
„ 35	150·9	1·88	1 38 14	·02857	„ 270	19·6	·24	0 12 44	·00370
„ 36	146·7	1·86	1 35 28	·02777	„ 280	18·9	·24	0 12 17	·00357
„ 37	142·7	1·78	1 32 53	·02702	„ 290	18·2	·23	0 11 51	·00345
„ 38	138·9	1·74	1 30 27	·02631	„ 300	17·6	·22	0 11 28	·00334
„ 39	135·4	1·69	1 28 8	·02563	„ 325	16·2	·20	0 10 35	·00308
„ 40	132·0	1·65	1 25 57	·02500	„ 350	15·1	·19	0 9 49	·00267
„ 41	128·8	1·61	1 23 50	·02438	„ 375	14·0	·18	0 9 10	·00267
„ 42	125·7	1·57	1 21 50	·02380	„ 400	13·2	·17	0 8 36	·00250
„ 43	122·8	1·53	1 19 56	·02325	„ 425	12·4	·16	0 8 5	·00235
„ 44	120·0	1·50	1 18 7	·02272	„ 450	11·7	·15	0 7 33	·00222
„ 45	117·3	1·47	1 16 24	·02222	„ 475	11·1	·14	0 7 14	·00210
„ 46	114·8	1·44	1 14 43	·02173	„ 500	10·6	·13	0 6 53	·00200
„ 47	112·3	1·40	1 13 8	·02127	„ 525	10·1	·12	0 6 33	·00191
„ 48	110·0	1·37	1 11 37	·02083	„ 550	9·6	·12	0 6 15	·00182
„ 49	107·7	1·35	1 10 9	·02040	„ 575	9·2	·11	0 5 59	·00174
„ 50	105·6	1·32	1 8 6	·01981	„ 600	8·8	·11	0 5 44	·00167
„ 55	96·0	1·20	1 2 30	·01818					

In a practical point of view, therefore, we may consider that the fifth and ninth columns in Table III. express the length of the level road which would be equivalent to a mile of road with the stated inclination, the former giving the result for heavy traffic, and the latter for passenger traffic. For instance, opposite 1 in 75, we find in the ninth column 1·247 mile, or nearly a

mile and a quarter, stated as the length of a road having that inclination which would be equivalent to one mile of a similar road perfectly level, because the same force would be requisite to move a coach of 3 tons at a velocity of 6 miles an hour along one as along the other. Although, however, they might be considered equal as far as the power requisite for traction was concerned, in other respects one might be more advantageous than the other; as, for instance, the shorter road would cost least for repairing, and would occupy least time in being passed over. Table III., therefore, merely expresses the equivalent length as far as the mechanical power required for the traction is concerned. The relative merits in other respects depend generally upon so many various circumstances as to render it quite impossible to lay down any specific rules for their determination.

In Table IV. are given several valuable data for laying down the gradients on roads. The first column gives the gradient expressed in the proportion of the horizontal length to that of the perpendicular height. The second and third columns show the vertical rise in miles and chains respectively. The fourth column contains the angle of inclination with the horizontal, and the last column the sine of the same angle, which will be found to facilitate the necessary calculations.

Cross-section of Roads.—The subject of the width and transverse form which should be given to roads must now be considered. As regards the first, a wide road is the best. It is an error to suppose that the cost of repairing a road depends entirely upon the extent of its surface, and consequently increases in the exact ratio of its width. The cost of a mile of road depends more upon the extent and nature of the traffic, and unless extremes be taken, it may be asserted that the same quantity of material would be necessary for the repair of a road, whether wide or narrow, which was subjected to the same amount of traffic. On the narrow road, the traffic, being confined more to one track, would wear the road more severely than when spread over a larger surface. The expense of spreading the material over the wider road would be somewhat greater, but the cost of the materials might be taken as the same. One of the advantages of a wide road is, that the wind and sun exercise more influence in keeping its surface dry. The first cost of a wide road is certainly greater than that of a narrow one, and that nearly in the ratio of its increased width.

For roads situated between towns of any importance, and exposed to much traffic, the width should certainly not be less than 30 ft., besides a footpath of 6 ft. In the immediate vicinity of large towns and cities, the width should be still further increased. No specific rules can, however, be given for the width in such situations, as experience will soon show the width which is requisite in any given situation.

The form to be given to the cross-section of a road is a subject of much importance, and one upon which much difference of opinion exists. Some advocate a considerable curvature in the upper surface of the road, with the view of facilitating the drainage of its surface, while others object to a road being much curved. Again, some roads have been formed on a flat surface transversely, and others with a dip to the formation surface each way from the centre, on the supposition that the drainage of the road will be thereby facilitated.

One of the best forms which could be given to a road, is that its cross-section should be formed of two straight lines inclined at the rate of about 1 in 30, and united at the centre or crown of the road by a segment of a circle, having a radius of about 90 ft. This form of section is shown in Fig. 6582, and the rate of inclination there given is quite sufficient to keep the surface of a road drained, provided it is in good order and free from ruts. If such is not the case, no amount of convexity which could be given to the road would be of any avail, as the water would still remain in the hollows or furrows. This form of cross-section is equally adapted to all widths of road, as the straight lines have merely to be extended at the same rate of inclination, until they meet the side of the road.

6582.

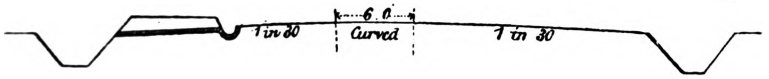

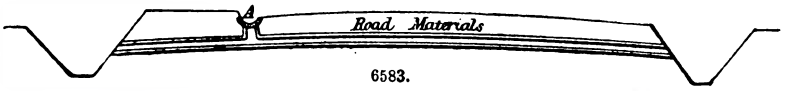

6583.

Drainage of Roads.—Too much attention cannot be paid to the drainage of roads, both as regards their upper surface, and that of the substructure on which they rest. To assist the surface drainage, the road should be formed with the transverse section shown in Fig. 6583, and on each side of the road a ditch should be formed of sufficient capacity to receive all water which can fall upon the road, and of such a depth, and with a sufficient declivity, to conduct the same freely away. When footpaths have to be constructed on the sides of the roads, a channel or water-course should be formed between them, and small drains, formed of tiles or earthen tubes, such as are used for under-draining lands, should be laid under the footpath, at such a level as to take off all the water which may collect in this channel, and convey it into the ditch.

In the best-constructed roads, these side channels should be paved with flints or pebbles. The drains under the footpath should be introduced about every 60 ft., and should have the same inclination, namely, 1 in 30, as used for the sides of the road, Fig. 6582; a greater inclination would be objectionable. It is a very frequent mistake to give too full a fall to small drains, the only effect of which is to produce such a current through them as to wash away or undermine the ground around them, and ultimately cause their own destruction. When a drain is once closed by any obstruction, no amount of fall which could be given to it will again clear the passage, while a drain, with a considerable current through it, is much more likely to be stopped from foreign matter being carried into it, which a less rapid stream could not have transported there.

In the case of a road whose surface was drained in the way just described, and whose surface was composed of proper materials in a compact state, very little water would find its way through to the substratum. With some descriptions of soil, however, it would be desirable to adopt means for maintaining the foundation of a road in a dry state; as, for instance, when the surface is a strong clay through which no water can percolate, or when the ground beneath the road is naturally of a soft, wet, or peaty nature. Under such circumstances it would be desirable to provide for its proper drainage by a species of under-drainage. As soon as the surface of the ground has been formed to the level intended for the reception of the road materials, trenches should be formed across the road, from 1 ft. to 18 in. in depth, and about 1 ft. wide at the bottom, the sides being sloped as shown in Fig. 6584. The distance at which these drains ought to be formed depends in a great measure on the nature of the soil. In the case of a strong clay soil, or one naturally very wet, there should be one about every 20 ft., and this distance might be increased as the ground became firmer or drier. In these trenches, a drain not less than 4 in. square internally should then be formed either of old bricks, drain-tiles, flat stones, or in any other mode used for under-drains, and the remainder of the trench should be filled with coarse stones, free from all clay or dirt, in the manner shown in Fig. 6584. Of course these drains must have a fall given them from the centre of the road into the ditches on either side. An inclination of 1 in 30 will be sufficient. When the road is level in the direction of its length, these drains should run straight across, but on those portions of the road which are inclined the drains should be formed as shown on the plan, Fig. 6585, somewhat in the form of a very flat V, the point being in the centre of the road, and the drains making an acute angle with the line of the road, in the direction in which it falls. The amount of this angle should not be greater than is shown in Fig. 6582.

6584.

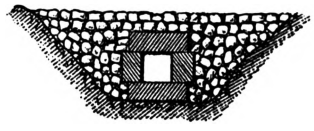

6585.

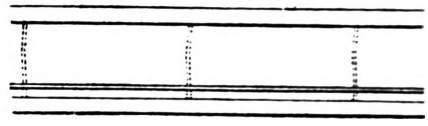

When a road with footpaths is under-drained in the manner which we have just described, it will not be necessary to form drains from the side channel under the footpath into the ditch, as shown in Fig. 6582, but merely to carry up a little shaft, constructed in the same way as the drain, from the drain to the channel, covering the same with a small grating to prevent leaves or other substances, which might choke the drain, being carried into it. This method of forming the drains is shown at A, in Fig. 6583.

Foundation of Roads.—Before the foundation of a road is laid, the ground must be prepared for it, by levelling, draining, and forming it. If the subsoil be wet and elastic it must be brought to a dry, tolerably hard condition. It is of no use to lay good road materials upon a wet, bad substratum. Country roads, as distinguished from town roads and streets, are usually laid on the natural surface of the ground, in spite of the expensive and continual repairs necessitated thereby. In these cases, when the ground is wet, and as frequently occurs, undrained, deep ditches should be cut on each side of the line of road and cross drains laid underneath. If the ground is very springy or boggy, a layer of fagots, about 6 in. in depth, may be put down, before distributing the road materials. When the road is on an embankment the surface should be either rolled or punned, that is, beaten with heavy beetles, so as to ensure as great a degree of solidity as possible. The same mode of proceeding should be followed, even where it is intended to form either a paved or a concrete foundation, for too much care cannot be bestowed on that part of the road.

One mode of forming an artificial foundation for roads consists in forming a rough pavement on the top of the formation surface, which is afterwards covered by the road materials. Upon the level bed prepared for the road materials, a bottom course or layer of stones is set by hand, in form of a close firm pavement. The stones set in the middle of the road are 7 in. in depth; at 9 ft. from the centre, 5 in.; at 12 from the centre, 4 in.; and at 15 ft., 3 in. They are set on their broadest edge lengthwise across the road, and the breadth of the upper edge is not to exceed 4 in. in any case. All the irregularities of the upper part of the pavement are broken off by the hammer, and all the interstices filled with stone chips, firmly wedged or packed by hand, with a light hammer, so that when the whole pavement is finished, there shall be a convexity of 4 in. in the breadth of 15 ft. from the centre.

The foundations of roads exposed to a very heavy traffic, such as the streets of a large city, are generally now laid in concrete, whatever may be the nature of the road surface or materials subsequently put on. In this case the proportion of gravel to lime is that of 4 to 1. The concrete is made on the surface of the road, and great care taken, when the water is added, that every particle of the lime is properly slaked and saturated. The bed of concrete having been spread to the depth of 6 in. over the half breadth of the road, the surface is then covered over with 6 in. of good hard gravel or broken stone, and this depth is laid on in two courses, of 3 in. at a time, the first course being frequently laid on a few hours after the concrete has been placed on the road. The carriages, however, are not on any account allowed to pass over it until the concrete has become sufficiently hard and solid to carry the traffic without suffering the road material to sink and be pressed into the body of concrete. On the other hand, the covering of gravel is always laid on before the concrete has become quite hard, in order to admit of a more perfect binding and junction between the two beds, than would take place if the concrete were suffered to become hard before laying on the first covering. The beneficial effect arising from the practice of laying on the gravel exactly at the proper time is, that the lower stones, pressed by their own weight, and by those above

them, sink partially into the concrete, and thus remain fixed in a matrix, from which they cannot easily be dislodged.

Surface of Roads.—Metalling, or Macadam.—A macadamized or broken-stone road may be laid upon an artificial foundation, or may consist altogether of broken stone or road metal. The former was Telford's plan, the latter that of M'Adam. The stone or road metal should be hard, tough, and durable. The best materials are granite, trap-rock, or whinstone. Hard compact limestone may also be used, and gravel composed of flints; but all flints should be broken into angular pieces, as if for concrete. The stones are broken down by means of a hammer with a steel face, into smaller and smaller pieces, until at length they are reduced to pieces roughly approximating to a cubical shape, and not exceeding 6 oz. in weight; which, on an average, is the weight of a cube of stone of 1·6 in. in the side. M'Adam directed each road inspector to carry a small balance, so as to be able to test the weight of a few stones from each heap. Besides breaking all gravel into angular pieces, it should be screened, to clear it of earth.

The road metal, thus prepared, is to be evenly spread over the road with a shovel and rake, in three successive layers of between 3 and 4 in. deep, each layer being left to be partly consolidated by traffic before another is laid; and thus is formed a firm, compact bed of angular fragments of stone, about 10 in. thick, which is impervious to water, or nearly so, and which soon acquires a smooth surface. According to M'Adam, 10 in. is the greatest thickness of metal required for any road, from 5 to 9 in. being often sufficient. His practice was to lay the metal simply on the natural ground, with no preparation except levelling inequalities and digging drains.

In order to make the traffic on a broken-stone road easier when it is first laid, a layer of sand and gravel, called blinding, is sometimes spread over it, but this practice is a bad one, for the sand and gravel work their way between the fragments of stone, and prevent their ever forming so compact a mass as they ought to do.

Paved Roads.—Stone.—In towns and other places where there is a constant and heavy traffic, the streets are generally paved with stone. Cubes or setts of granite, from 3 to 6 in. wide, 7 to 20 in. long, and from 6 to 9 in. deep, are laid closely side by side upon a substratum of concrete or broken stone, compressed into hard macadam, and the surface is grouted with lime and sand. A depth of 9 in. is the maximum, even for the heaviest traffic in the streets of London, blocks 7 in. being sufficient for ordinary service, and 4½ in. the minimum anywhere. In London a pavement of new Aberdeen granite, 3 in. wide and 9 in. deep, under a heavy and concentrated traffic, such as that of Cheapside, must be renovated, and the stones redressed and relaid, every five or six years, but on ordinary roads granite pavement, if properly laid in the first instance, will last from ten to thirty years. When laid upon bridges there should be a concrete substratum, not less than 6 in. thick, between the platform and the stone. A heavy road material of this kind is best adapted for short spans, for cast-iron arched bridges, and for other situations where the dead load may with advantage compare largely to the moving load.

Paved Roads.—Wood.—The ordinary method of forming a roadway for permanent use is by laying blocks from 4 to 7 in. deep, close together, with the grain of the wood vertical. Oak or other hard timber was formerly considered the best, but it has been found that fir, although not so hard, is better, and that its longer fibre renders it more durable than oak, and not so slippery.

As under constant traffic the blocks will sometimes become loose, different plans have been tried for holding them together. Octagonal or hexagonal blocks have been fitted together so as to give homogeneity to the whole, and prevent lateral movement. The same result is sought by priming or mortising the blocks together, and many ingenious and complicated methods of this kind have been attempted. In a large area the density of the blocks will vary, or the ballast or concrete below may not be equally solid at all points, and some of the blocks, under the pressure of a heavy load, will sink down and make an uneven roadway. To prevent this, the plan has been adopted of making the pieces of the shape in Fig. 6586, so that the pressure upon any one piece is to some extent borne by the adjoining piece. A considerable improvement on this plan is effected by making the blocks of the shapes in Fig. 6587, so as effectually to unite them against the downward pressure of a load.

By the methods above described the blocks are laid close together; and as, under certain circumstances, a wood pavement may become slippery, it is by some engineers considered that a better foot-hold for horses may be obtained by leaving a gap between the blocks. Figs. 6588, 6589, illustrate one of these methods, the blocks being laid ¾ in. apart, and the spaces between them filled in with cement or mortar. But cement or mortar once disintegrated, as in this case is likely, will not again unite, and for cohesive purposes becomes useless.

6586. 6587. 6588. 6589.

A pavement which seems to unite the supposed advantages of those in Figs. 6586 to 6589 has been used with some success in America, and is now, 1872, on trial in London and other European cities.

The arrangement of the blocks, and the process of laying them, may be thus described;—Planks ¾ in. thick, having been dipped in tar, are laid across the road upon a bed of concrete, or upon previously existing hard macadam, and a second layer of similar planks is laid longitudinally. Dantzic fir blocks 9 in. long, 3 in. wide, and 6 in. deep, are then laid across the street upon the planks, and a long strip of wood, ⅞ in. square, is nailed to the bottom of the blocks and to the planking. This strip of wood forms a distance-piece, separating one row of blocks from another, and as the parallel rows are laid, there are, of course, gaps ⅞ in. wide between each. Into these gaps or spaces small grit or gravel, without sand, is inserted, and driven in by blows from a mallet; and liquid tar is

poured upon the gravel so as to soak into it. By this plan the pressure upon any one block is divided by the planks over a considerable area of the substratum, but the planks are an obstruction if trenches or small openings in the roadway have to be made for repairs of gas-pipes; or any works laid underneath.

With careful treatment a wood pavement may be made to last a long time in a cold or temperate climate. When first laid, the surface should be well tarred and sprinkled with fine gravel; and this should be repeated occasionally, and at any time during a frost, to prevent slipping. The gravel will be forced into the wood, and will harden and preserve it. The accumulation of mud should be prevented.

Asphalted Roads.—Asphaltum is one of the varieties of bitumen found in many parts of the world, and generally in the nature of rock. The asphalte used is of two kinds, the compressed and the liquid or mastic asphalte. The former is in its natural condition of mineral rock, and made into powder. This powder, having been heated, is laid upon concrete, and is compressed by heated irons into a homogeneous mass. The liquid or mastic is a mixture of asphalte with mineral tar and small grit, from gravel or shingle, and is applied as a hot paste. It is in this condition also that other asphaltes are applied.

In London, for the heaviest traffic, a stratum of concrete, 6 in. to 9 in. thick below the asphalte, has been adopted, but for less severe service it would not be necessary to use more than 5 in. of concrete, which thickness, for instance, on the iron platform of a bridge would suffice. The asphalte itself is laid 2¼ in. thick for constant heavy traffic, and 1½ to 2 in. for ordinary traffic. On side paths for foot-passengers, asphalte ½ in. thick laid on 3 in. or 4 in. of concrete is sufficient.

The qualities which recommend asphalte are, the smoothness of surface, which renders traction easy; the diminution of noise; and, for bridges, its moderate weight as compared with stone. The headway below a bridge may be increased, or the gradient rendered easier, by a reduction in the thickness of the road material. There is no doubt that the thickness of the asphalte becomes considerably reduced when in use, but it is not yet clearly known whether this is owing to attrition only, or in some measure to the compression which is claimed for it by its advocates. On a level surface, in dry or wet weather, asphalte, if kept clean, is not more slippery than stone; but for steep ascents traction would be difficult, and if the gradient were such as to render brakes or drags necessary, the grinding action of the locked wheels would be injurious to the asphalte. In the City of London, 1 in 60 is the steepest gradient for which asphalte is permitted. Asphalte cannot be successfully laid or repaired in frosty weather. It has been proved to be free from danger by fire.

Maintaining and Repairing Roads.—Too great attention cannot be bestowed upon keeping the road surface from an accumulation of mud, and even of dust. It should be constantly cleaned by scraping and sweeping. The repairs should be daily made by adding fresh material upon all points where hollows or ruts commence to form. It is recommended by some that when fresh material is added, the surface on which it is spread should be broken with a pick to the depth of half an inch to an inch, and the fresh material be well settled by ramming, a small quantity of clean sand being added to make the stone pack better. When not daily repaired by persons whose sole business it is to keep the road in good order, general repairs should be made in the months of October and April, by removing all accumulations of mud, cleaning out the side channels and other drains, and adding fresh material where requisite.

The importance of keeping the road surface at all times free from an accumulation of mud and dust, and of preserving the surface in a uniform state of evenness, by the daily addition of fresh material wherever the wear is sufficient to call for it, cannot be too strongly insisted upon. Without this constant supervision, the best-constructed road will, in a short time, be unfit for travel, and with it, the weakest may at all times be kept in a tolerably fair state.

We shall next proceed to a brief description of the tools or implements employed in the construction and repair of roads. The most important of these is the level used for forming the true transverse section of the road. It consists, Fig. 6590, of a horizontal straight-edge or bar A C, having in the centre of its length a plummet B D, for ascertaining when the straight-edge is horizontal. A line is drawn near the end A of the bar, and at every 4 ft. from this line a gauge *a b c d* is fixed in a dovetailed groove, in such a way as to be capable of being moved up or down,

6590.

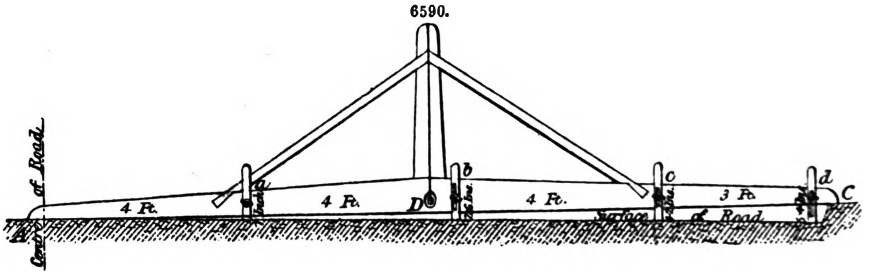

so as to adjust the depth of its lower end below the horizontal line of the bottom of the straight-edge; and there are thumb-screws, one of which is shown on an enlarged scale in Fig. 6592, passing through each gauge, by tightening which the gauge can be fixed when so adjusted. When the bottoms of the gauges *a*, *b*, *c*, and *d*, have been adjusted as in Fig. 6590, they will coincide with the surface recommended to be given to a road 30 ft. in width, as in Fig. 6582; and in order to ascertain whether the surface of any existing road is constructed to the proper inclination and form, it is only requisite to apply the level, which, when placed perfectly horizontal, by means of the plummet B D, should rest upon the road at the lower extremity of each of the gauges *a*, *b*, *c*, and *d*. For forming

the sides of roads of greater width than 30 ft., it would be convenient to have a level constructed in the manner shown in Fig. 6591, in which the A B is a straight-edge about 15 ft. long, having in the centre of its length a plummet C D, so adjusted that when hanging truly in its place, the lower side of the straight-edge should be inclined from a horizontal line at the rate of 1 in 30.

Fig. 6596 is the pick used for lifting the surface of roads. The bent iron head *a b* should weigh about 10 lbs., having a large eye in the centre *c*, in which is fitted the handle, which should be of ash, rather more than 2 ft. in length; one extremity, *a*, should be formed like the end of a chisel, while the other, *b*, should terminate in a blunt point. Both ends should be tipped with steel.

The most useful form of shovel for road purposes is shown in Fig. 3841, p. 1834. The blade should be somewhat pointed, and the handle bent, so as to enable the person using it to bring the blade flat upon the surface of the road without excessive stooping.

6591.

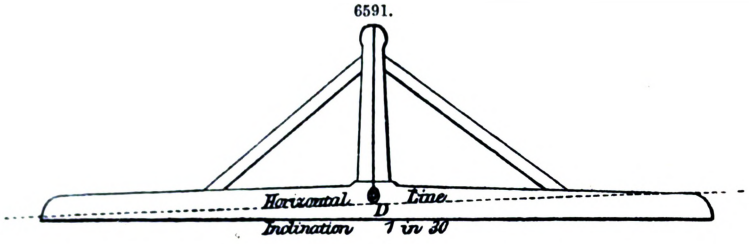

6592. 6593. 6594. 6595.

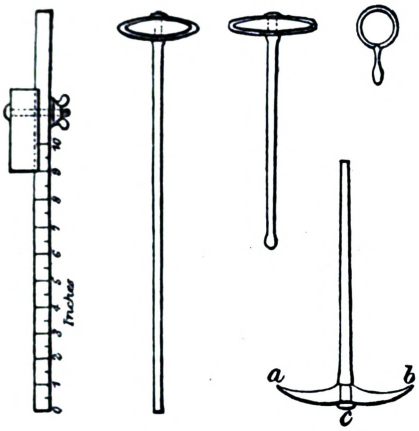

6596.

6597.

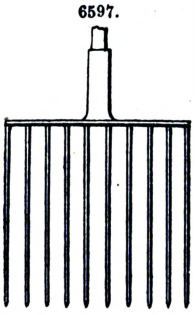

The ordinary wheelbarrows are of ash or elm, with cast-iron wheels; but it would be an advantage if wheelbarrows for road purposes were made of wrought iron, which would combine strength and durability with lightness. Of whatever material, however, they are constructed, they should not exceed 9 in. in depth, and their sides should be splayed with a slope of 2 to 1. It would be also very desirable to have hooks placed on their sides to receive a shovel and pick.

The screens, or sieves, employed for separating the coarse gravel from the hoggin or small gravel, consist of iron wires or slender rods, placed at equal distances apart, and fixed in a frame of wood, the sides of which are raised about 5 in. above the plane of the wires. In the screens the frames are rectangular, about 5 ft. 6 in. in height and 3 ft. wide, and the wires are stretched in the direction of its length at distances varying from $\frac{1}{2}$ in. to $1\frac{1}{4}$ in., according to the size of the stone required; and these wires are kept in place by others crossing them at intervals of 5 or 6 in. When used, they are placed so that the plane of the wires is inclined about 30° from the upright, and the gravel to be screened being dashed or thrown forcibly against them; the finer particles pass through and fall on the farther side of the screen, while the large stones roll down its surface and fall on the nearest side. The sieves are somewhat different in form, the frame being circular, forming a cylinder about 6 in. in depth and 20 in. in diameter, the wires being placed either as we have already described, or equally close in both directions, and forming a kind of bottom to the cylinder. The sieve is held horizontally by one man, while the other throws into it a shovelful of gravel. Upon shaking the sieve, the fine hoggin falls through, leaving the stones in the sieve, which are then thrown by the man into anything which may be placed to receive them. The latter is generally the best and cheapest mode of screening gravel.

The hammers employed for breaking stones are of two sizes, Figs. 6593, 6594. The handles should be of straight-grained ash, and the iron heads of the form shown in the drawings; the faces spherical, and case-hardened, or steeled. Fig. 6595 represents the ring to be used for testing the size of the broken stones. Its internal diameter is $2\frac{1}{2}$ in., and the largest stones should be able to be passed through the ring in every direction.

Fig. 6597 represents a pronged fork, to be used instead of a shovel for taking up the stones to throw upon the road. The advantages attending its use are, that a man can take up the stones much quicker and easier than with a shovel, and free from all dirt and extraneous matter which, in the case of broken angular stones, is of importance.

The rakes, which should be employed in filling in ruts and hollow places in the surface of roads, should be formed with prongs between 2 in. and 3 in. in length, fixed, at the distance of ¾ in. apart, into a wooden head about 11 in. in length. Their handles should be formed of ash, and should be about 6 ft. in length. Scrapers are indispensable for preserving roads in a proper state and free from mud. They are usually constructed of wood shod with wrought iron, but it is much better to make them entirely of iron. They should be 6 in. in depth, and about 18 in. in length, and slightly curved at each extremity to prevent the escape of mud at each side.

Scraping machines are very generally employed, by means of which the surface of a road may be scraped much more regularly and quickly than with the old scrapers. They consist of a number of iron scrapers, attached to a frame mounted on wheels, which are so placed that, when the body of the machine is somewhat raised, the wheels are lifted from the ground, and the whole weight of the machine is thrown upon the scrapers, which, upon the machine being drawn across the road, scrape all the mud from its surface, and carry it to the sides.

A machine has also been invented by Whitworth for sweeping up the mud from the roads and carrying it away at once. It consists of a species of endless broom, passing round rollers attached to a mud cart, and so connected by cogged wheels with the wheels of the cart, that when the latter is drawn forwards, the broom is caused to revolve, and sweeps the mud from the surface of the road up an inclined plane into the cart. The machine is drawn by one horse, and by its aid the roads are swept much more rapidly and better than by the old system of scraping.

Fences.—Where fences are indispensable they should be kept as low as possible, and thrown as far as is possible from the sides of the road. Where the road has a deep ditch on either side, it then becomes necessary, to prevent accidents, that the fence should be placed between the road and the ditch. In all other situations, the fence should be placed on the field side of the ditch, for the double reason, that in so doing the surface drainage of the road into the side ditches is less interfered with, and that the road is then not so much sheltered by the fence itself. The different descriptions of fence which may be employed are very various, and those which answer in the case of railways will do equally well for roads.

Rolling Roads.—The importance of rolling roads, either newly constructed or when subjected to extensive repairs, is now duly appreciated, and a road may be put at once into good working condition, and a considerable expense eventually saved, by thorough systematic rolling. No road ought to be considered as made until that operation shall be completely effected.

There are certain considerations which may serve as guides to arrive at first conclusions with regard to rolling roads, which in London and other large cities is usually done by steam rollers.

A roller should not be too heavy in proportion to its bearing surface, or, instead of binding the material in the position and form laid down and desired, it will press it more or less into the substratum. Much of the material will thus become useless, and it will be very troublesome to obtain the necessary resistance for consolidation. It must not be too light, or the effect will be too small ever to gain the object fully, or at any rate without an extent of operation that would be very costly or inconvenient. From recorded trials, there is reason to believe that a road roller should not be lighter than 28 cwt. for every 12 in. lineal bearing on the road; that is, if 4 ft. wide, that it should weigh 5 tons 12 cwt.; if 3 ft. 4 tons 4 cwt., and so on in proportion. It should only be applied to the upper surface of the road.

A roller somewhat heavier than 28 cwt. a foot would be more effective, but it is better after that limit, to gain the object rather by adding to the number of times that the surface is passed over, than incur the inconveniences of the heavier machinery. For effect, the wider a roller can be the better, because the operation will be more quickly performed, and because, in proportion as it is narrow, will there be a tendency to force the broken stone laterally from under its action. But, as the weight must be in proportion to its bearing surface, the width must be limited to a degree that will prevent that weight being too unwieldy. A very narrow roller might also have a tendency to overturn.

On the other hand, one that is very wide may take up too much room, if the road is open to traffic during the time of its use.

It is absolutely necessary to apply some gravel, or other sharp, gritty, fine stuff on the surface, during the operation, without which it will not be thoroughly bound. The consolidation commences with the lower part, which is the first to get fixed and arranged, and when, after about six turns over the whole, the upper layers have become tolerably firm and well bedded, some sand or stone-dust, or, what is best of all, sharp gravel, may be lightly sprinkled over it by degrees at every successive rolling, solely for the purpose of filling up the interstices of the broken stone, and not to cover it. About 3 cub. yds. in 100 sq. yds., equal to about 1 in. in thickness, spread over the whole surface, will be required. It is essential that this small stuff be not applied earlier, or it will get to the lower strata, and not only be wasted, but injurious. The object is that it should penetrate for 2 or 3 in. only, to help to bind the surface. Provided the upper interstices are filled, the less gravel used the better. It should be applied by degrees after each of the three or four last successive passages of the roller, and then only over the places where there are open joints. After the work, if well done, is completed, it is stated that such is the effect that the upper crust may be raised in cakes of 6 or 7 sq. ft. at a time, which could never be done without the gravel. The effect may be improved also by having the upper inch or two of stone finer than the rest, to pass through a ring of 1¼ in. or 1½ in. This work should be done in wet weather, or the material will require to be watered artificially, as is done in practice.

See ASPHALTE. PERMANENT WAY. RAILWAY ENGINEERING.

Works relating to the subject;—Gautier (H.), 'Traité des Chemins,' 8vo, Paris, 1721. Delaistre (J. R.), 'Dictionnaire des Ponts et Chaussées,' 3 vols. 8vo; atlas 4to, Paris, 1812. Edgeworth (R. E.), 'On Roads and Carriages,' 8vo, 1817. M'Adam (J. L.), 'On Roads,' 8vo, 1821. Cordier (J.), 'Essais sur la Construction des Routes,' 2 vols. 8vo; atlas in fol., Paris, 1823–28. Parnell (Sir H.), 'A Treatise on Roads,' 8vo, 1838. Leahy (E.), 'On Making and Repairing Roads,' 12mo, 1844. Polonceau (A. R.), 'Notice sur l'Amélioration des Routes,' 4to, Paris, 1844. 'Programmes

de l'École des Ponts et Chaussées,' 10 vols. 4to, 1848–1872. Burgoyne (Sir J. F.), 'Art of Constructing and Repairing Common Roads,' 12mo, 1861. Paget (F. A.), 'On the Economy of Road Maintenance,' 8vo, 1870. Gillespie (W. M.), 'Principles and Practice of Road Making,' 8vo, New York, 1872. See also 'Life of Thomas Telford,' C.E., 4to, and fol.; and Papers in the 'Minutes of the Institution of Civil Engineers,' the 'Annales des Ponts et Chaussées,' and the 'Professional Papers on Indian Engineering.'

ROCK-SHAFT. Fr., *Arbre oscillant;* Ger., *Oscillirende welle;* Ital., *Albero oscillante;* Span., *Arbol oscilante.*

Rock-shaft is a name applied to any shaft that oscillates on its journals, instead of revolving; more strictly, a vibrating shaft for modifying motion in the valve-gear of a steam-engine. It is called also *rocker* and *rocking shaft.*

ROLLING MILL. Fr., *Laminoir;* Ger., *Walzwerk;* Ital., *Laminatoio;* Span., *Laminador.* See Iron.

ROOFS. Fr., *Toits;* Ger., *Dächer;* Ital., *Tetto;* Span., *Tejados.*

The subject of roofs is one which is closely allied to that of bridges, especially since the introduction of iron as a constructive material, and its increasing employment by engineers and architects in both these descriptions of structures. A roof is, in fact, nothing else than a bridge, which has comparatively a light load to support, and one, moreover, which is of a less variable and impactive character. The greatest static load which can come upon a roof is when it is covered with snow, and the greatest dynamical, when one half of it is exposed to the action of a violent storm, or wind pressure. The former is provided for by making the roof strong enough in every part to bear this maximum load, and the latter by a proper arrangement of bracing and windties. The greatest strain to which a roof can be exposed, whether statical or dynamical, is trifling in comparison with that which would attend a bridge of equal span, intended for either heavy road or locomotive traffic. In some few instances, roofs and bridges have been built almost identical in shape, and in the examples of iron roofs and bridges there is frequently a general resemblance both in principle and form. The different purposes for which the two structures are intended, and the different conditions under which they are placed, otherwise than when the mere question of strain is concerned, prevent that close resemblance being universally obtained. Practical considerations also will always, and particularly in large examples, tend to maintain that diversity of arrangement which experience has shown to be not only unavoidable but absolutely necessary under the circumstances.

Classification of Roofs.—Roofs can be divided into two classes, which will comprise all roof structures, namely, those in which the pressure upon the supports is at an angle outwards with the vertical, and those in which it is in a vertical direction only. Accordingly roofs without a horizontal thrust are complete in themselves, or self-contained, and those with a horizontal thrust are incomplete, and their stability depends on that of the abutments. To these, however, must be added a third class, which, taken separately, have a horizontal thrust, but which, by being arranged upon a circular, elliptical, or polygonal base, and inclined towards a common centre, can be made dependent upon each other, and independent of abutments, by connecting them at their springing by a tie, which, as it joins all the principals at their springing, is in plan a polygon. Such roofs are called domed or curved roofs.

Designing Roofs.—Before an engineer can undertake to design and prepare the necessary drawings for either a timber or an iron roof, it is indispensable that he be supplied with some data, however slight, upon which to proceed. In general he will require the following, in addition to the ground plan and proposed height of the structure. 1. The description of support provided for the roof, so that he may determine whether the design shall be that of a simple trussed roof or of an arched roof, which would exert a horizontal thrust against the walls or columns upon which it might be carried. 2. The purpose for which the building is intended. Beyond a width of about 40 ft., the question arises whether the roof shall be made in one or more spans, and as the cost may in some cases be considerably diminished by having the roof supported at intervals between the walls, so reducing the width of any one span, it is necessary to know if intermediate columns or walls, so placed, will prove an obstruction. 3. It must be known whether the building is to be open at the sides and ends, or to be enclosed, and if the latter, whether by walls, or by iron screens, or glass. 4. As it is sometimes cheaper and better to make a roof hipped, Figs. 6598, 6599, than gabled, Figs. 6600, 6601, any reason or preference for or against either plan should be given. 5. The nature of the climate should be stated with reference to the following points:—The ventilating arrangements which may be needed; the kind of roof covering most suitable; the strength of the roof for resisting heavy winds or hurricanes; the nature and amount of light required, and the gutters and rain-pipes necessary. Any local drains to which the rain-water must be conveyed should be indicated, so that the vertical pipes or water columns may be arranged accordingly. 6. The designer should be informed whether the structure is to have any ornamental character, or whether cheapness is the primary consideration. 7. If there are difficulties in the way of transporting materials to the site, they should be stated, so that, if necessary, the roof may be made in pieces of moderate size and weight. It is useful to know whether skilled labourers can be obtained for erecting the roof, so that if it is difficult to procure them, the design may be contrived with special reference to facility of erection. Information also should be afforded as to what materials, such as brick, stone, or timber, can be obtained near the site, and, if possible, at what prices. It may be stated as a general rule, that roofs and buildings, especially when of iron, should have their parts equally divided. A hipped roof should consist of regular squares, in accordance with which the columns, principals, and purlins can be arranged. Facilities for repetition and the economical disposition of material are afforded by making the divisions of the sides and ends corresponding. Thus a plan arranged as in Fig. 6602, with the side

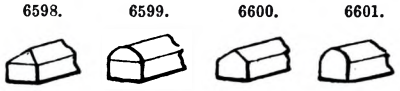

and end spaces all equal, is better than an irregularly shaped plan. Where an irregular plot of ground has to be covered, it is better to confine the irregularity to as few points as possible, and to let the greater part of the structure be composed of rectangular or other uniform figures, than to provide for the irregularities by altering the dimensions of parts gradually throughout the whole building.

6602.

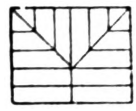

Pitch of Roofs.—The pitch of a roof, or the angle which its inclined side forms with the horizon, is varied according to the climate and the nature of the covering. The inhabitants of cold countries make their roofs very high, while those of warm countries, where it seldom rains or snows, make their roofs nearly flat, but the practice even in the same climate has varied considerably. Low roofs require large slates and the utmost care in execution. They are cheaper than high ones, since they require timbers of less length and of smaller scantling. Formerly the roofs were made very high, perhaps with the notion that the snow would slide off easier, but where there are parapets a high roof is attended with bad effects, as the snow slips down and stops the gutters, and an overflow of water is the consequence. Besides, the water in heavy rains descends with such velocity that the pipes cannot convey it away soon enough to prevent the gutters overflowing. In high roofs the action of the wind is one of the most considerable forces they have to sustain, and it is supposed to have been with a view of lessening their height that the Mansard or curb roof was invented. The quantity of room lost by a curb roof, the difficulty of freeing the gutters from snow, and the ungraceful effect of the roof itself, are objections that are not compensated by the small difference of the expense between it and a common roof, especially now that experience has proved that roofs may be made much less in height than our ancestors were in the habit of making them.

The height of timber roofs at the present time is very rarely more than one-third of the span, and should never be less than one-sixth. The usual pitch for slates is when the height equals one-fourth of the span, or when the angle with the horizon is 26½°. Near the sea, or in very exposed situations, the height of the roof should be one-third of the span, for if less, the rain and snow will be driven under the slates by the wind.

The same conditions with respect to the pitch prevail in the case of iron roofs when they are of the trussed form. Greater latitude is allowed when the arch forms are used, as will be seen from the examples selected for illustration.

Loads on Roofs.—Statical or Permanent Load.—The load on a roof is of a double character, and consists of the statical or permanent load, and the dynamical or accidental load. The static load is composed of the weight of the framework which includes the principals, primary and secondary, and the purlins, and of the weight of the covering together with the louvres, glazing, and any ornamental additions.

Dynamical or Accidental Load.—The accidental load consists of snow and the pressure of the wind. An allowance of about 6 lbs. a square foot is sufficient in England, but a maximum of 20 lbs. has been allowed in other countries. The estimate of the allowance for wind pressure may be put at about 30 lbs. a square foot. Tredgold estimated the total accidental load on roofs at 40 lbs. a square foot of surface covered, or say 35 lbs. for wind and 5 lbs. for snow pressure, and the largest roofs are generally constructed for a uniformly distributed vertical load of this amount. When, however, the great Lime Street roof at Liverpool of 153 ft. span was erected, it was immediately seen that a uniformly distributed load was not the worst casualty to which it might be subjected. Locke, therefore, in spite of a protest from its designer, required that a rib should be tested with a load of 40 lbs. a square foot hung on one half the roof, the other being unloaded, thus imitating, as nearly as was possible with a vertical load, the effect of the wind pressure acting broadside on. A rib of the great Birmingham roof was similarly tested, first with 40 lbs. a square foot uniformly distributed over the whole roof, and next with a similar load on half the roof only. In these cases the testing load represented the snow pressure, the wind pressure, and the weight of the permanent roof covering.

The ordinary force of gales amounts to from 20 to 25 lbs. a square foot on a surface perpendicular to their direction. More rarely, higher pressures are registered, ranging from 33½ lbs. to as much as 55 lbs.

If the maximum pressure of the wind is assumed at 40 lbs., it will be sufficient. On the inclined surface of a roof the pressure will be much less than this, the law of the variation of the pressure with the inclination being known with tolerable accuracy from the experiments of Hutton. Let P be the intensity of the wind pressure in lbs. the square foot, on a surface perpendicularly opposed to it; θ the inclination of any plane surface to the wind's direction. Then the intensity of the pressure normal to the surface will be, $P n = P \sin. \theta^{1 \cdot 84 \cos. \theta - 1}$. The component of that pressure, parallel to the wind's direction, will have the intensity, $P h = P \sin. \theta^{1 \cdot 84 \cos. \theta}$. The component perpendicular to the wind's direction, the intensity, $P v = P \cot. \theta \sin. \theta^{1 \cdot 84 \cos. \theta}$.

That is, if the wind blow horizontally P h is the horizontal and P v the vertical component of the pressure on the roof. Putting P = 40, we get the following values of the normal pressure and its components, for various inclinations of the roof surface to the direction of the wind;—

Lbs. a Square Foot of Surface.

Angle of Roof.	P n.	P v.	P h.	Angle of Roof.	P n.	P v.	P h.
°				°			
5	5·0	4·9	0·4	50	38·1	24·5	29·2
10	9·7	9·6	1·7	60	40·0	20·0	34·0
20	18·1	17·0	6·2	70	41·0	14·0	38·5
30	26·4	22·8	13·2	80	40·4	7·0	39·8
40	33·3	25·5	21·4	..	40·0	0·0	40·0

Now whether a roof is exposed to a vertical wind-pressure of 35 lbs. a square foot, as in Tredgold's assumption, or not, it is certain that it will be exposed to the pressure of winds blowing horizontally. If, therefore, according to the common practice, the roof is designed to resist a uniform vertical pressure of 40 lbs. a square foot, plus the weight of the framing, it is at least equally necessary to examine whether it will resist the partial normal pressures given in the previous Table, which, in many cases, will produce a much greater distorting effect, and an entirely different distribution of stress on the bracing. It is difficult to fix the limits of the probable variation of the direction of the wind relatively to the roof, but if we suppose that in eddying gusts it may strike the roof, in any direction between the horizontal and vertical, then the maximum stress on any given member will be found in one or other of the three following cases;—

1. Wind blowing horizontally, which is the most ordinary condition of loading.
2. Wind normal to one side of the roof surface.
3. Wind vertical, which may possibly happen as a momentary condition, but which is certainly the least probable of possible modes of loading. The ordinary assumption, that the roof is subject to uniform vertical loads only, supposes the wind vertical, and neglects the horizontal component of the pressure, which will exist even in that case.

In the two former cases the loading due to the wind is unsymmetrically and unequally distributed. In the third case the loading is uniform in straight-raftered roofs, and symmetrical in arched roofs.

Timber Roofs.—Roofs of this material have, similarly to bridges, been greatly superseded by those of iron, particularly when of large dimensions. For small spans, timber roofs will always be employed, so long as the material is procurable. For spans of moderate dimensions, they are still very frequently used. They are less heavily strained than bridges, and are, moreover, if well built, better secured from the effects of the weather, and are consequently more durable. As a rule timber roofs are built a great deal too heavy, a consequence probably of a somewhat too servile adherence to old types of construction, in which weight was synonymous with strength. The most economical roof, and the one also which will best fulfil the conditions of proportion and efficiency among its relative parts, will invariably be that which contains the minimum amount of material, provided the structure be scientifically designed. The principal point of difference to be noticed in the comparison of the ancient and modern roofs is, that in the former the abutments in the form of buttresses were employed to take the thrust at the feet of the rafter, while in the majority of the latter, a tie, horizontal or inclined, is used instead.

Of timber roofs there are numerous varieties, the best known of which and those most frequently employed we shall briefly describe and illustrate.

Fig. 6603 is a very simple truss, in which the tie is above the bottom of the feet of the principals, which is often done in small roofs for the sake of obtaining height. The tie in this case is called a collar. The feet of both common and principal rafters rest on a wall-plate. The purlins rest on the collar, and the common rafters abut against a ridge running along the top of the roof. This kind of truss is only suited to very small spans, as there is a cross strain on that part of the principals below the collar, which is rendered harmless in a small span by the extra strength of the principals, but which in a large one would be very likely to thrust out the walls.

In roofs of larger span the tie-beam is placed below the feet of the principals, which are tenoned into, and bolted to it. To keep the beam from sagging, or bending by its own weight, it is suspended from the head of the principals by a king-post of wood or iron.

6603.

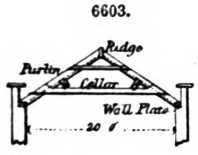

6604.

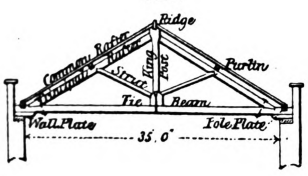

6605.

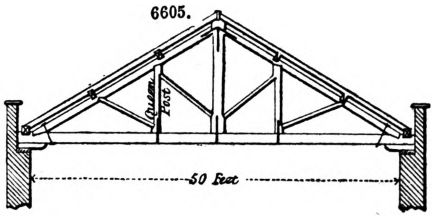

The lower part of the king-post affords support for the struts supporting the principals immediately under the purlins, so that no cross strain is exerted on any of the timbers in the truss, but they all act in the direction of their length, the principals and struts being subjected to compression, and the king-post and tie-beam to tension. Fig. 6604 is a sketch of a king-truss. The common rafters abut on a pole-plate, the tie-beams resting either on a continuous plate, or on short bed-plates of wood or stone. Where the span is considerable, the tie-beam is supported at additional points by suspension pieces called queen-posts, Fig. 6605, from the bottom of which spring additional struts. By extending this principle, we might construct a roof of any span, were it not that a practical limit is imposed by the nature of the materials. Sometimes roofs are constructed without king-posts, the queen-posts being kept apart by a straining piece, as in Fig. 6606, which shows the design of the old roof of the church of St. Paul, outside the walls, at Rome. This truss is interesting from its early date, having been erected about 400 years ago and since destroyed. The trusses are in pairs, a king-post being keyed in between each pair to support the tie-beams in the centre.

The largest timber roof ever designed in one span was intended for the Imperial Riding House at Moscow, but was never built. The span was 235 ft., and the elevation is shown Fig. 6607. The principal feature in this roof was an arched beam, the ends of which were kept from spreading by a tie-beam, the two being firmly connected by suspension pieces and diagonal braces. The arched beam, Fig. 6608, is formed of three thicknesses of timber, notched out to prevent their sliding on each other. This method is objectionable on account of the danger of the splitting of the timber under a considerable strain.

When the span of a timber roof exceeds 60 ft. the truss, Fig. 6609, may be employed to advantage. One half is shown in the figure with a queen-post, and the other with the similar member acting

6606.

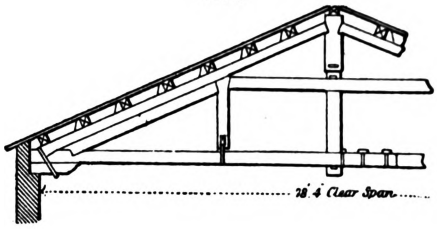

6607.

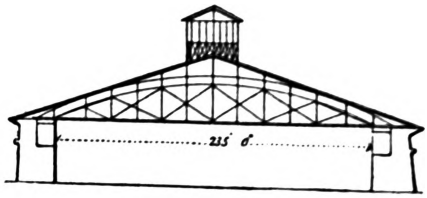

6608.

6609.

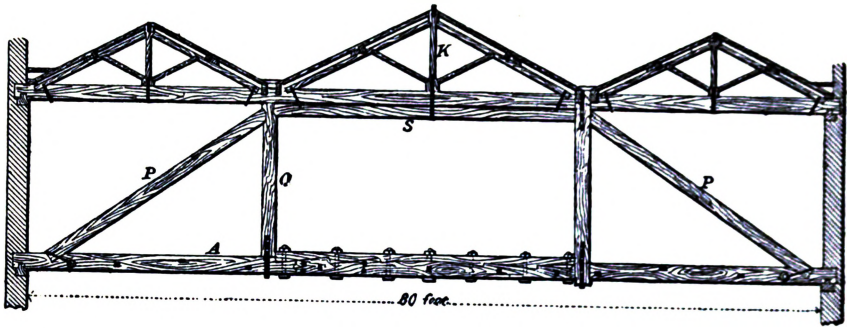

6610.

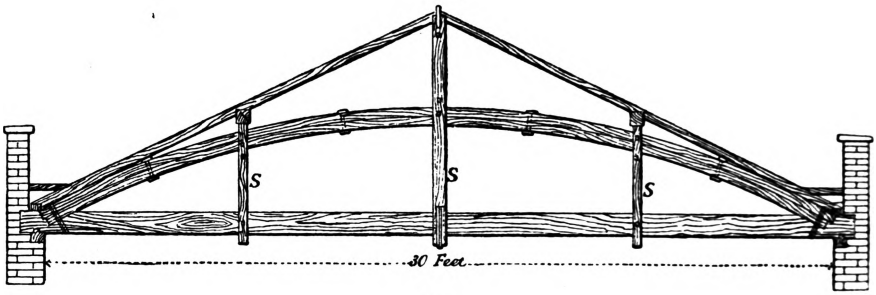

6611.

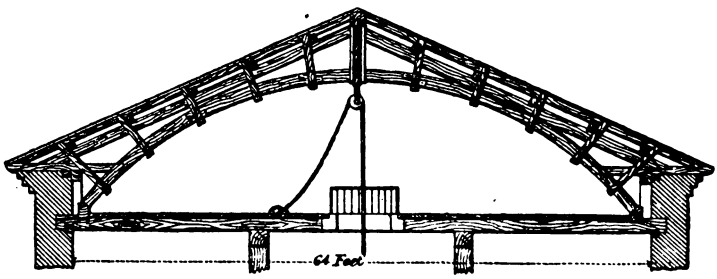

as a suspended tie. The middle part of the longitudinal tie-beam is constructed as a girder. Fig. 6610 is a roof in which the ribs are all in one piece, and bent in the same manner used for ship timbers. The rise or versed sine of the ribs is one-half that of the roof, and the suspending pieces are notched in pairs, and bolted and strapped together. The noticeable good points in this roof are the small number of joints in the truss, the number of points at which it can support the tie-beam, and dispensing with the shrinkage which attends the use of king and queen posts. Fig. 6611 is a roof designed for a provision store at Helder, in Holland. The rafters were supported by a solid arched rib formed in five lengths, connected by scarfs. The length of the store for which this roof was designed is nearly 320 ft., and the width 64 ft. The ribs were spaced 16 ft. apart from centre to centre, and between each pair were six rafters, which supported the roof. The floor-beams were supported by posts, which were indispensable in consequence of the great span, 64 ft. An architect designing a roof on this principle at the present time would avail himself of the

use of iron to a greater extent than appears in this design. Fig. 6612 is a design taken from Emy's and Demanet's works. It is particularly adapted for a ship-builder's shed, and has been used for covering locomotive sheds. Unless the sides are well covered in, this description of roof is very liable to be blown off by the wind getting in underneath. It would also require very strong holding-down bolts, let into a good block of concrete or large deep bed-stones as in the figure. About thirty years ago a portion of a roof of this kind, erected at Chatham, was blown clean away, for a distance of 60 or 70 ft.

6612.

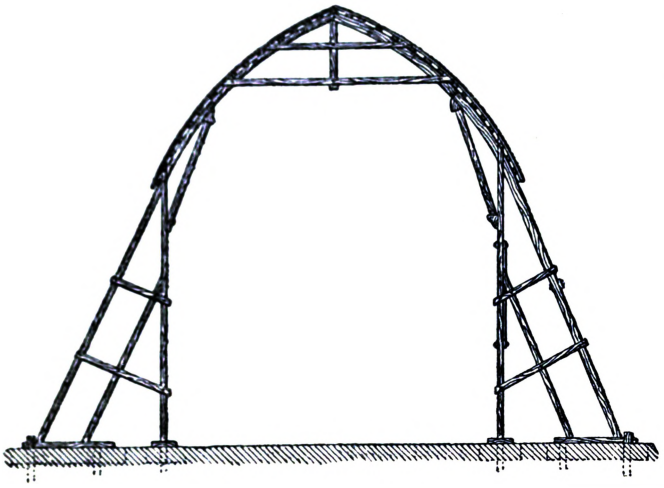

6613.

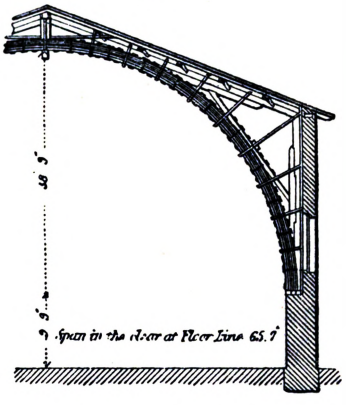

About the sixteenth century, Philibert de Lorme, a celebrated French architect, introduced a description of roofs and domes with a series of arched timber ribs in place of trusses, these ribs being formed of planks in short lengths, placed edgewise, and bolted together in thicknesses, breaking joints.

There are some great disadvantages connected with this system. The labour is great as compared with roofs of similar span of the ordinary construction, and, as the chief strength of the rib depends upon the lateral cohesion of the fibres of the wood, it is necessary to provide a large amount of surplus strength. But Emy proposed an improvement on the system which was precisely the laminated arched rib which has continued in use to the present day.

This design was put into execution in the erection of a large roof 65 ft. span at Marac, near Bayonne, Fig. 6613. The ribs in this roof are formed of planks bent round on templets to the proper curve, and kept from separating by iron straps, and also by the radiating struts which are in pairs, notched out so as to clip the rib between them.

The principle of the roof is exceedingly good. The principals, wall-posts, and arched rib form two triangles, firmly braced together, and exerting no thrust on the walls, and the weight of the whole roof being thrown on the walls at the feet of the ribs, and not at the pole-plate, the walls are not tried by the action of a heavy roof, and the consequent saving in masonry is very great.

The great difference in principle between the arched rib of Philibert de Lorme, and the laminated rib of Emy, is, that in the latter the direction of the fibre of the wood coincides with the curvature of the rib, and, as a consequence of this, the joints are much fewer. The rib possesses considerable elasticity, so as slightly to yield rather than break under any violent strain, and, from the manner in which the planks are bolted together, it is impossible for the rib to give way, unless the force applied be sufficient to crush the fibres.

Gothic Roofs.—The open timber roofs of the middle ages come, for the majority, under the second class, namely, those which exert more or less thrust upon the walls, although there are many fine examples in which this is not the case.

The high-pitched roofs of the large halls of the fifteenth and sixteenth centuries, for the most part, are trussed in a very perfect manner, so as to exert no thrust upon the walls; although, in some instances, as at Westminster Hall, they depend upon the latter for support.

The general design of these roofs is shown in Figs. 6614, 6615. The essential parts of each truss are a pair of principals connected by a collar or wind-beam, and two hammer-beams, with queen-posts over them, the whole forming three triangles, which, if not secured in their relative positions otherwise than by the mere transverse strength of the principals, would turn on the points *c*, *c*, Fig. 6615, the weight of the roof thrusting out the walls in the manner shown in the figure. There are two ways in which a truss of this kind may be prevented from spreading. 1st. The ends of the hammer-beams may be connected with the collar by tension pieces *a*, *a*, Fig. 6614, by which the thrust on the walls will be converted into a vertical pressure; 2nd. The hammer-beams may be kept in their places by struts *b*, *b*, the walls being made sufficiently strong by buttresses, or otherwise, to resist the thrust. In existing examples, we find sometimes one and sometimes the other of these plans followed, and occasionally both methods are combined in such a manner that it is often difficult to say what parts are in a state of compression, and what are in a state of tension. The roof of the great hall at Hampton Court, Fig. 6616, is very strong, and so securely tied, that were the bottom struts *b*, *b*, removed, there would be little danger of the principals thrusting out the walls; and, on the other hand, from the weight of the roof being carried down to a considerable distance

below the hammer-beams by the wall-posts, the walls themselves offer so much resistance to side thrust, that there would be no injurious strain on them were the tension pieces *a*, *a*, removed.

6614.

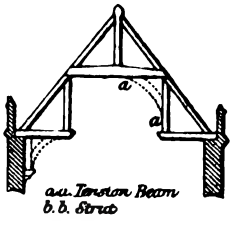

6617.

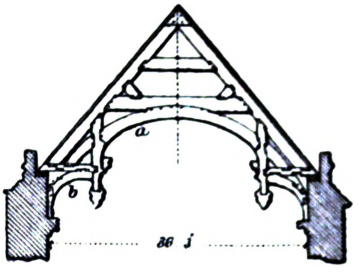

6615.

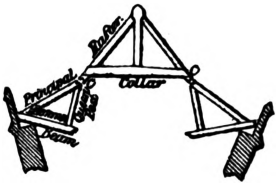

6616.

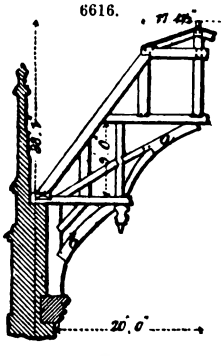

6618.

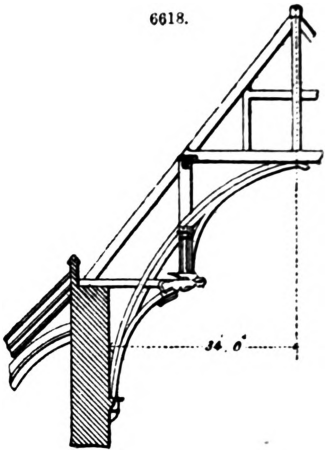

The construction of the roof of the hall at Eltham Palace, Kent, Fig. 6617, differs very considerably from that of the Hampton Court roof. The whole weight is thrown on the top of the wall, and the bottom pieces *b*, *b*, are merely ornamental, the tension pieces *a*, *a*, forming a complete tie. This has been shown by a partial failure which has taken place. The wall-plates having become rotten in consequence of the gutters being stripped of their lead, the weight has been thrown on the pseudo-struts, which have bent under the pressure, and forced out the upper portion of the walls.

The roof of Westminster Hall, Fig. 6618, is one of the finest examples now existing of open timbered roofs. The peculiar feature of this roof is an arched rib in three thicknesses, something on the principle of Philibert de Lorme. This is so slight, compared with the great span, that it is probable in designing the roof, the architect took full advantage of the support afforded by the thickness of the walls and the buttresses, if, indeed, the latter were not added at the time the present roof was erected, in 1395. It has been ascertained that the weight of the roof rests on the top of the walls, the lower part of the arched rib serving only to distribute the thrust, and to assist in preventing the hammer-beams from sliding on the walls.

The examples adduced are sufficient to show the general principles of building roofs of timber. For particulars of the manner in which the different members are framed together, and for the rules for determining their strength, see CONSTRUCTION.

TABLE I.—SCANTLINGS OF TIMBER FOR DIFFERENT SPANS, FROM 20 TO 30 FEET, FOR THE ROOF, FIG. 6604.

Span.	Tie-beam.	King-post.	Principal Rafters.	Struts.	Purlins.	Small Rafters.
feet.	inches.	inches.	inches.	inches.	inches.	inches.
20	$9\frac{1}{2} \times 4$	4×3	4×4	$3\frac{1}{2} \times 2$	$8 \times 4\frac{3}{4}$	$3\frac{1}{2} \times 2$
22	$9\frac{1}{2} \times 5$	5×3	5×3	$3\frac{3}{4} \times 2\frac{1}{4}$	$8\frac{1}{4} \times 5$	$3\frac{3}{4} \times 2$
24	$10\frac{1}{2} \times 5$	$5 \times 3\frac{1}{2}$	$5 \times 3\frac{1}{2}$	$4 \times 2\frac{1}{2}$	$8\frac{1}{2} \times 5$	4×2
26	$11\frac{1}{2} \times 5$	5×4	$5 \times 4\frac{1}{4}$	$4\frac{1}{4} \times 2\frac{1}{2}$	$8\frac{3}{4} \times 5$	$4\frac{1}{4} \times 2$
28	$11\frac{1}{2} \times 6$	6×4	$6 \times 3\frac{1}{2}$	$4\frac{1}{2} \times 2\frac{3}{4}$	$8\frac{3}{4} \times 5\frac{1}{4}$	$4\frac{1}{2} \times 2$
30	$12\frac{1}{2} \times 6$	$6 \times 4\frac{1}{2}$	6×4	$4\frac{3}{4} \times 3$	$9 \times 5\frac{1}{2}$	$4\frac{3}{4} \times 2$

In this Table the trusses are supposed to be not more than 10 ft. apart, the pitch of the roof about 27 degrees, the covering slate, and the timber Baltic pine, or other equally strong.

TABLE II.—SCANTLINGS FOR ROOFS, FROM 30 TO 46 FEET SPAN, FOR THE ROOF, FIG. 6605; TRUSSES 10 FEET APART.

Span.	Tie-beam.	Queen-posts.	Principal Rafters.	King-post.	Braces.	Purlins.	Small Rafters.
feet.	inches.	inches.	inches.	inches.	inches.	inches.	inches.
32	10 × 4½	4½ × 4	5 × 4½	6¾ × 4½	3¾ × 2½	8 × 4¾	3½ × 2
34	10 × 5	5 × 3½	5 × 5	6¾ × 5	4 × 2½	8¼ × 5	3¾ × 2
36	10½ × 5	5 × 4	5 × 5¾	7 × 5	4¼ × 2½	8½ × 5	4 × 2
38	10 × 6	6 × 3¾	6 × 6	7¼ × 6	4½ × 2½	8½ × 5	4 × 2
40	11 × 6	6 × 4	6 × 6	8 × 6	4½ × 2½	8¾ × 5	4¼ × 2
42	11½ × 6	6 × 4½	6¼ × 6	8¼ × 6	4½ × 2¾	8¾ × 5¼	4½ × 2
44	12 × 6	6 × 5	6½ × 6	8½ × 6	4½ × 3	9 × 5	4¾ × 2
46	12½ × 6	6 × 5½	7 × 6	9 × 6	4¾ × 3	9 × 5½	5 × 2

Pitch of the roof about 27 degrees, covering slate, and timber as already mentioned.

TABLE III.—SCANTLINGS FOR ROOFS OF FROM 46 TO 60 FEET SPAN, FOR ROOF IN FIG. 6606; TRUSSES 10 FEET APART.

Span.	Tie-beam.	Queen-posts.	Posts.	Principal Rafters.	Straining Beam.	Braces.	Purlins.	Small Rafters.
feet.	inches.	inches.	inches.	inches.	inches.	inches.	inches.	inches.
48	11½ × 6	6 × 5¾	6 × 2¼	7½ × 6	8¼ × 6	4½ × 2¾	8½ × 5	4 × 2
50	12 × 6	6 × 6¼	6 × 2½	8½ × 6	8½ × 6	4½ × 2¾	8¾ × 5	4¼ × 2
52	12 × 6½	6 × 6¾	6 × 2¾	9¼ × 6	8¾ × 6	4¾ × 2¾	8¾ × 5¼	4¼ × 2
54	12 × 7	7 × 6¼	7 × 2¼	6½ × 7	9 × 6	5¾ × 2¾	8¾ × 5¼	4½ × 2
56	12 × 8	7 × 6¾	7 × 2½	7½ × 7	9¼ × 6	5 × 2¾	8¾ × 5¼	4½ × 2
58	12 × 8½	7 × 7¼	7 × 2¾	8¼ × 7	9½ × 7	5 × 2¾	9 × 5¼	4¾ × 2
60	12 × 9	7½ × 7	7 × 3	9 × 7	10 × 7	5 × 3	9 × 5½	4¾ × 2

TABLE IV.—SCANTLINGS FOR ROOFS, FROM 70 TO 80 FEET SPAN, FIG. 6609; TRUSSES 10 FEET APART.

Span.	Tie-beam.	Queen-posts.	Principal Rafters.	Straining Beam.
feet.	inches.	inches.	inches.	inches.
70	15 × 11½	9½ × 8	13 × 9½	12 × 9½
75	15 × 14	10 × 8½	13½ × 10	12 × 10
80	16 × 13	10½ × 9	14 × 10½	13 × 10½
85	16 × 14½	11 × 10	14½ × 11	13 × 11

TABLE V.—SCANTLINGS FOR ROOFS, FROM 20 TO 32 FEET SPAN, FIG. 6610; TRUSSES 10 FEET APART.

Span.	Tie-beam.	Curved Rib.	Suspending Pieces.		Purlins.	Common Rafters.
			No. of Pairs.	Scantlings of each Piece.		
feet.	inches.	inches.		inches.	inches.	inches.
20	8 × 4	4 × 4	3	4 × 2	8 × 5	3½ × 2
24	8 × 4	4¾ × 4	3	4 × 2	8 × 5	4 × 2
28	8 × 5	5¼ × 5	3	4 × 2¼	8½ × 5	4½ × 2
30	8½ × 5	6 × 5	3	4 × 2¼	8½ × 5	4¾ × 2
32	9 × 5½	6 × 5½	3	4 × 2½	8½ × 5	5 × 2

Domes or Cupolas.—A dome or cupola is a roof of which the base is a circle, an ellipse or a polygon, and its vertical section a curved line, concave towards the interior. Hence domes are called circular, elliptical, or polygonal, according to the figure of the base.

The most usual form for a dome is the spherical, in which case its plan is a circle, and section a segment of a circle. The top of a large dome is often furnished with a lantern, which is supported by the framing of the dome. The exterior and interior forms of a dome are not often alike, and in the space between, a staircase to the lantern is generally made. According to the space left between the external and internal domes, the framing must be designed. Sometimes the framing may be trussed with ties across the opening, but often the interior dome rises so high that ties cannot be introduced. Accordingly the construction of domes may be divided into that of domes which admit of horizontal ties, and domes without such ties. A truss for a dome where a horizontal tie can be introduced is shown in Fig. 6619. A A is the tie; B, B, posts, which may be continued to form the lantern; C, C, are continued curbs in two thicknesses, with the joints crossed and bolted

together; D D, a curved rib to support the rafters. This design is calculated for a span of about 60 ft., and may be extended to 120 ft.

6619.

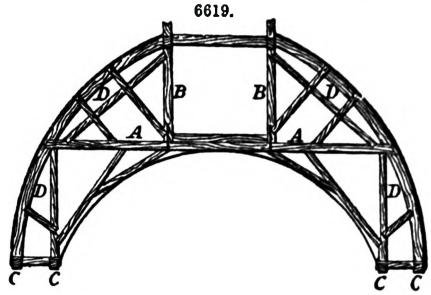

6620.

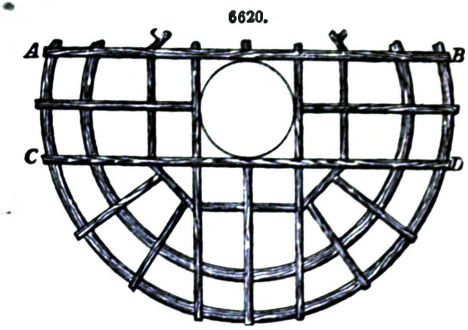

Two principal trusses may be placed across the opening parallel to each other, and at a distance apart equal to the diameter of the lantern, as A B, C D, Fig. 6620, with a sufficient number of half trusses to reduce the bearing of the rafters to a convenient length. By another arrangement, the two principal trusses may cross each other at right angles in the centre of the dome, the one being placed so much higher than the other as to prevent the ties interfering. This disposition is represented in Fig. 6621, and is the same as that adopted for the Dôme des Invalides at Paris, of which the external diameter is nearly 90 English feet.

6621.

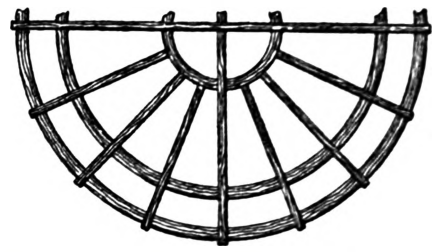

Domes without Horizontal Ties.—The construction of domes without horizontal cross-ties is not difficult when there is a sufficient tie round the base. The most simple method, and one which is particularly useful in small domes, is to place a series of curved ribs so that the lower ends of those ribs stand upon the curb at the base, and the upper ends meet at the top, with a sufficient number of intermediate braces to prevent the ribs from yielding laterally.

When the pieces are long, and so much curved that they cannot be cut out of timber otherwise than across the grain, which reduces their strength, they should be put together in thicknesses, with the joints crossed, and well nailed together. In very large domes, they should be bolted or keyed together. The method of making curved ribs in thicknesses has been adopted in the construction of centres for arches from the earliest period of arch building, and it was first applied to the construction of domes by Philibert de Lorme, who gives the following scantlings for different sized domes;—

For domes of	24	ft. diameter,	8	in. by	1 in.
„	36	„	10	„	$1\frac{1}{2}$ „
„	60	„	13	„	2 „
„	90	„	13	„	$2\frac{1}{2}$ „
„	108	„	13	„	3 „

These ribs are formed of two thicknesses of the scantlings given above, and are placed about 2 ft. apart at the base. The rafters are notched upon them for receiving the boarding, and also horizontal ribs are notched on the inside, which gives a great degree of stiffness to the whole. Fig. 6622 is a section of a dome constructed in this manner, and Fig. 6623 a projection of a part of

6622.

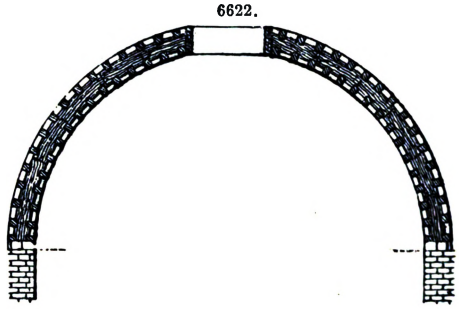

6623.

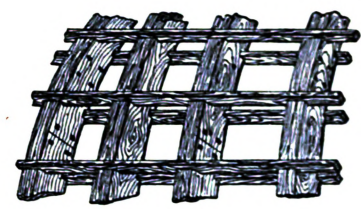

the dome, with the rafters and inside ribs. When a dome is of considerable magnitude, the curve of equilibrium should pass through the middle of the depth of the ribs, particularly if a heavy lantern rests upon them, otherwise the ribs should be within the curve of equilibrium, and they ought to be strutted to prevent their bending in. Or, if it be necessary for the external appearance of the dome that the curvature of the ribs should be without the curve of equilibrium, then an iron hoop may be put round at about one-third of the height to prevent the dome bursting outwards. This latter method was adopted in the external dome of the Church de la Salute at Venice. The outside dimensions are 80 ft. diameter, 40·5 high, and the lantern 39·5 ft. high; but the lantern is supported by a brick dome, which is considerably below the wooden one. The ribs of this dome

are 96 in number, and each rib is in four thicknesses; the four together make 5·5 in., so that each rib is 8·5 in. by 5·5 in. The iron hoop is 4·5 in. wide and ½ in. in thickness, and is placed at one-third of the height of the dome.

One of the finest applications of the system of De Lorme was the cupola over the Original Halle au Blé at Paris, completed in 1783, Fig. 6624. Although 129 ft. in diameter, its thickness did not

6624.

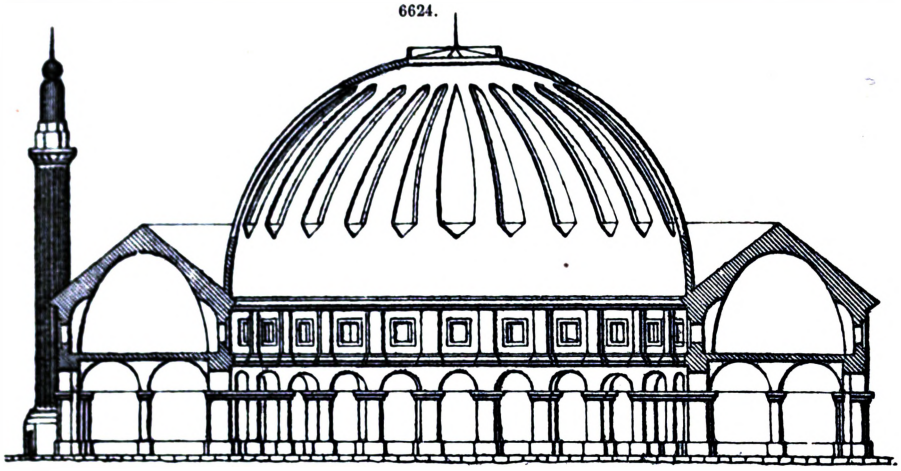

much exceed 1 ft., notwithstanding which it stood in perfect safety until destroyed by fire in 1802. The ribs of which it was composed were formed of planks in 9-ft. lengths, 13 in. wide, and 3 in. thick, bolted and tied together. At about one-third of the height of the dome from the springing every third rib was discontinued to admit of an opening, which was glazed. The ribs were about 2½ ft. apart at the base, and those next the openings were formed with four thicknesses of planks, all the others having only three. At the top of the dome the ribs were framed into a circular ring of timber, leaving an open space which was protected by a glazed canopy, with perforations for the ventilation of the building.

No modern example, executed in wood, has surpassed this dome, either for simplicity or strength, and the facilities afforded at the present day by the use of wrought iron, has probably rendered the execution of domes of this magnitude in wood a thing of the past, except for temporary purposes.

When a dome is intended to support a heavy lantern, it may require the principal ribs to be stronger than can be obtained out of a single piece of timber, but the framing may always be made sufficiently strong by using two ribs, with braces between, and tied together by radial pieces across from rib to rib. A truss of this form, in Fig. 6625, would sustain a very heavy lantern if the curve of equilibrium were to pass in the middle between the ribs, as the dotted line does in the figure.

6625.

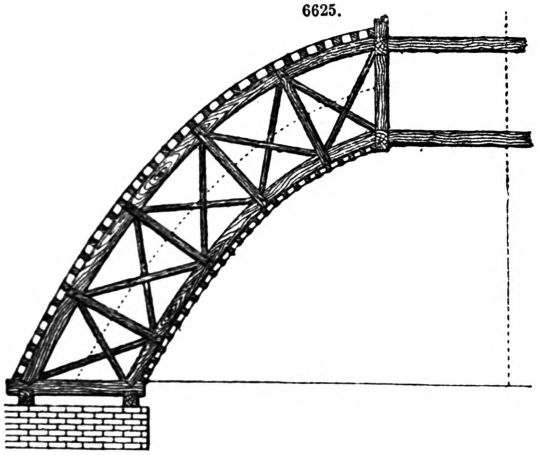

6626.

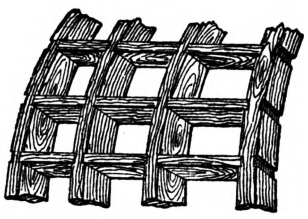

Trusses somewhat similar to that in Fig. 6625 were used for the roof and semi-domes of the Dublin Exhibition building in 1853. Each truss was formed of two concentric vertically-laminated ribs about 5 ft. apart, with intermediate diagonal framing, in which both struts and ties were formed of timber. The upper or outer rib consisted of ten lamina 1½ to 2 in. in thickness, and 4 to 18 in. in depth. The breadth of the rib at top was 18 in., and at bottom only 3 in., each being stepped back from the lower edge of the preceding. The inner rib was formed of six 1½ and 2 in. lamina, and was 12 in. deep and 10 in. wide. The span of the semi-domes of the great hall was 100 ft., and the principal trusses were 25 ft. apart.

Where a light dome is required, without occupying much space, the ribs may be placed so near to each other that the boards can be fixed to them without rafters, or short struts may be placed between the ribs, as shown in Fig. 6626.

Iron Domes.—The most remarkable examples of iron domes are to be found in those covering the Royal Albert Hall at Kensington, and the Exhibition building at Vienna. The plan of the former dome is not circular, but oval with four centres. Some idea of its size may be gathered from the following facts. Its height from the arena to the spring of the roof is about 135 ft., and to the top of the lantern, which surmounts the roof, is about 150 ft. The span of the roof is 219 ft. 4 in. by 185 ft. 4 in.; and the span of the outer walls is 272 ft. by 238 ft. The engravings of the roof, Figs. 6627 to 6640, show clearly the design and construction of the ironwork. Fig. 6641 is a

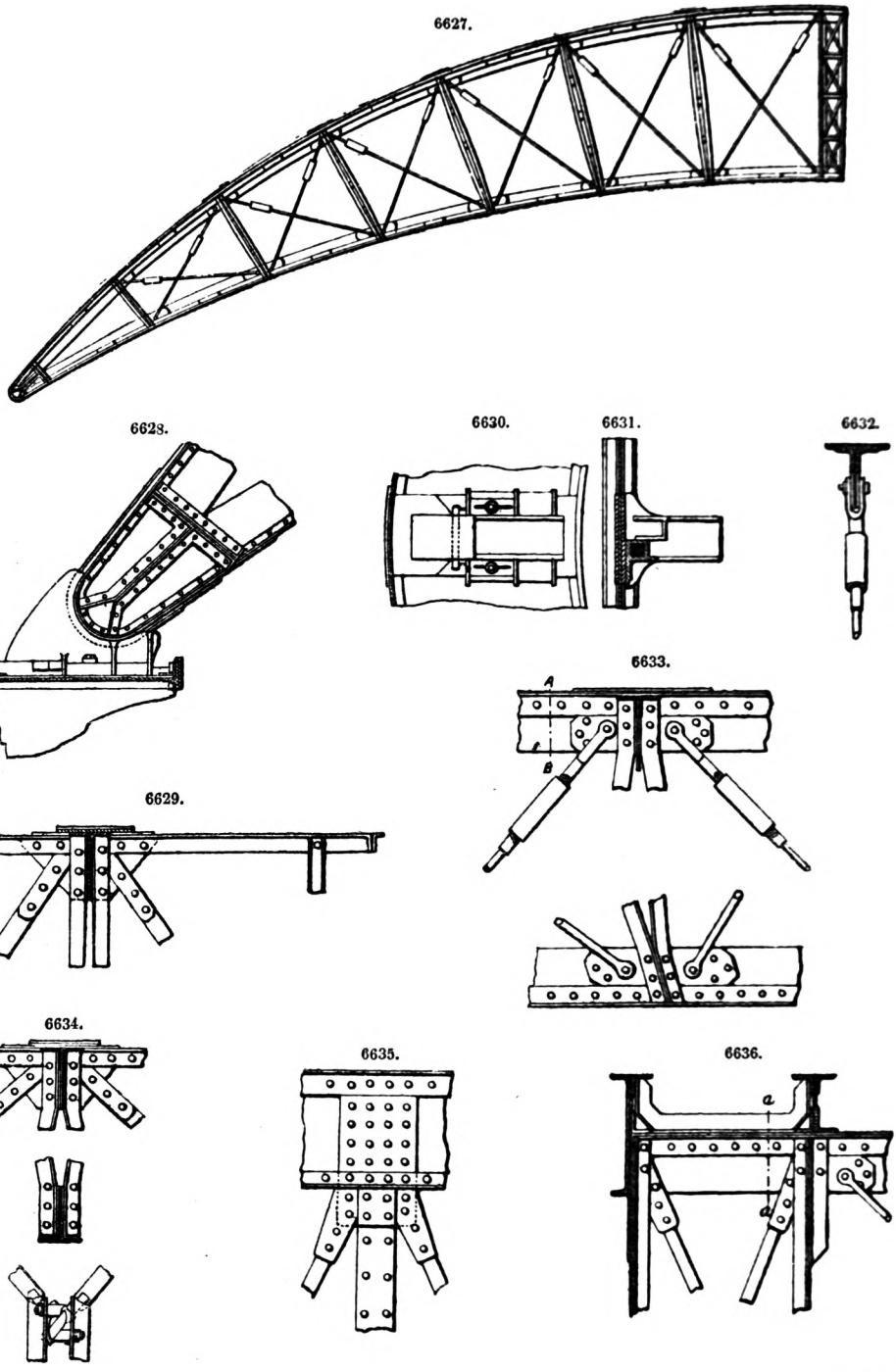

longitudinal section through the longer axis of the roof, where the clear span is 219 ft. 4 in. Fig. 6627 is a section through the shorter axis, and Fig. 6640 is a plan of one quarter of the roof. All

these figures show the general disposition of the principal and the purlins. Around the wall, at the level of the springing of the roof, is a wrought-iron wall-plate, shown in the drawing, formed of a

6637.

6638.

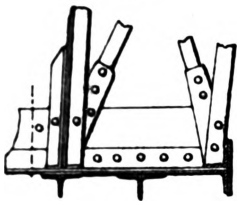

6639.

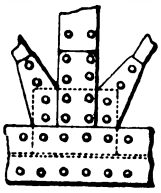

6640.

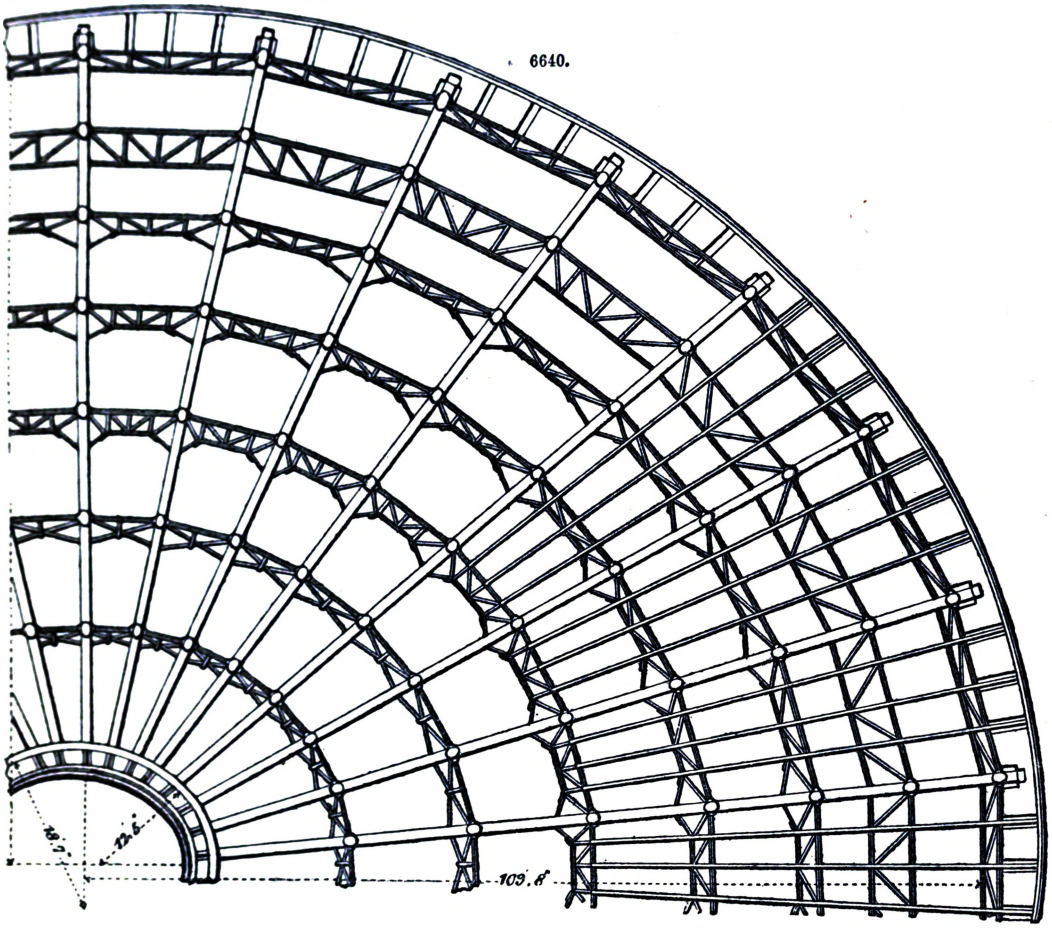

girder laid horizontally, with a web-plate $\frac{7}{16}$ in. thick, and 3 ft. 8 in. wide, strengthened at each end by $\frac{7}{16}$-in. flange 8 in. deep, and connected to the web by angle irons 3 in. by 3 in. by $\frac{3}{8}$ in. Beneath each principal shoe is a plate 1 ft. 9 in. wide, 2 ft. long, and $\frac{3}{4}$ in. thick, riveted through the web-plate to an upper plate $1\frac{3}{4}$ in. thick. Upon this plate is secured by keys the cast-iron shoe in which the heel of the principal rests. It is 2 ft. $9\frac{3}{4}$ in. deep and 1 ft. $1\frac{3}{4}$ in. broad, and is formed with a central member, 1 ft. $\frac{3}{4}$ in. wide, projecting from each side of the shoe so as to clip the upper plate riveted to the wall-girder, and to which it is secured by wrought-iron keys at the back of the shoe. A 1-in. bolt also passes through a slot in the projection on each side of the shoe, Fig. 6628, and secures it to the wall-plate. The face of the shoe receiving the principal is curved to a radius of 10 in., corresponding to that of the heel of the principal. The upper member of the principal is struck with a radius of 145 ft., the lower member has a radius of 114 ft. on the smallest diameter of the roof, increasing to the maximum span. The details of the principals are shown fully in Figs. 6627 to 6641. The upper members of the ribs are 9 in. deep and 11 in. wide, formed of a top flange $\frac{5}{16}$ in. thick, secured to a web of the same thickness by angle irons 3 in. by 3 in. by $\frac{5}{16}$ in.; the bottom member of the rib has the same dimensions, but the flange-plate is omitted. The upper and lower chords of the principals are connected and stiffened with wrought-iron struts, as shown in Figs. 6627 and 6641.

The struts are formed of four angle irons $2\frac{1}{2}$ in. by $2\frac{1}{2}$ in. by $\frac{5}{16}$ in., disposed in pairs on each side of the web-plates of the top and bottom members of the principal, and kept separated by

distance pieces of cast iron, of the form seen in the engraving. The bays between the struts are occupied with diagonal bracing, the tie-rods being $1\frac{3}{4}$ in. diameter, forked at the ends to receive the web-plates, and swelled at the upper side to $1\frac{3}{4}$ in. diameter.

6641.

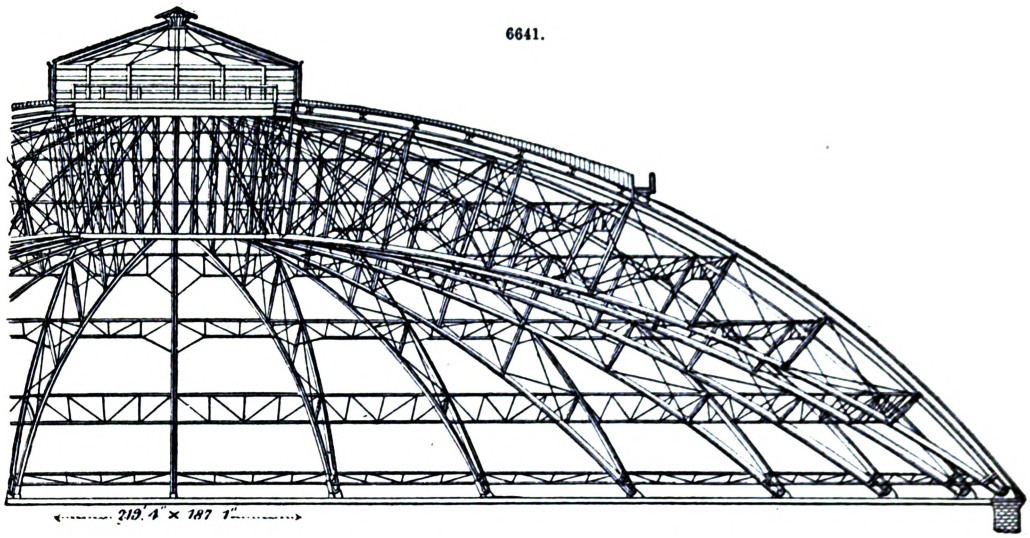

Each truss-rod is formed of two pieces, these pieces being coupled together by an adjusting nut, 1 ft. in length, to regulate the length of the rod. At the heel of the principal, the top and bottom member of the ribs meet, and are formed into one piece by means of a cover plate stiffened with angle irons in the manner shown in Fig. 6628.

Towards the centre the principals converge to a central curb, which is elliptical, and corresponds with the curves of the outer wall-plate. This curb, Figs. 6640 and 6641, is 17 ft. $6\frac{1}{2}$ in. in depth, which corresponds to the maximum depth of the rib. It is a double ring, the top 2 ft. 6 in. deep, and the upper part is formed of two girders; the outer one, 9 in. deep, is made up of a web-plate and angle iron; the inner one is 1 ft. 7 in. deep, the top member being on the same level as the outer ring, while the web extends 10 in. lower, and forms a curb, against which the upper chord of the main rib abuts and is bolted. A plate $\frac{1}{2}$ in. thick and 2 ft. 9 in. wide, connects these inner and outer girders, and, overlying the top of the principals, ties them together with each other and with the curb. The construction of the bottom member of the curb differs from the top. It consists of a $\frac{1}{2}$-in. web-plate, which is riveted to the under side of the lower chord of the principals, and stiffened with a flange on the inner side 8 in. deep and $\frac{1}{2}$ in. thick, the web being also strengthened with two T irons 6 in. by 8 in. by $\frac{3}{8}$ in. The space of 17 ft. $6\frac{1}{2}$ in. between the top and bottom portions of the curb is filled with vertical struts of plate and angle irons, and diagonal struts 3 in. wide by $\frac{3}{8}$ in. thick. On the outside and inside curved faces of the curb diagonal bracing runs round the complete

6642.

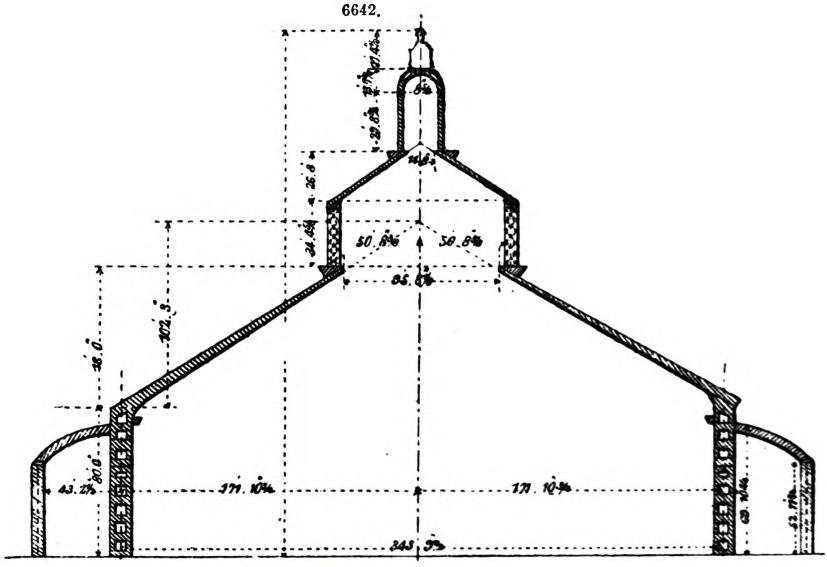

ellipses, as in Fig. 6641, and in the details. The principals are connected by seven rows of purlins, arranged in lines parallel to the plan of the building. These decrease in strength from the

springing to the crown of the roof, and the heaviest ones are shown in the figures. They are 5 ft. 11 in. deep, the top and bottom members being formed of angle iron 3 in. by 3 in. by $\frac{5}{16}$ in., and are connected by intermediate standards of channel iron, the bays being braced with flat bars 3 in. by $\frac{1}{2}$ in. The first purlin, placed a little above the springing of the roof, differs from the others in being only 2 ft. 3 in. deep. At their intersection with the principals connections are made by means of gusset-plates on the top of the purlins; at intervals varying from the springing towards the crown, run a converging series of light channel iron. A portion of the enclosure is roofed over, but a central elliptical space 100 ft. by 138 ft. is left to form a skylight.

The other example of iron domes is that which formed the roof of the central space in the Vienna Exhibition of 1873. The main dimensions, which far exceed all ordinary limits, are shown in the diagram. The roof of the rotunda, Fig. 6642, is made of iron plates. The lower edge is strengthened and supported by a heavy wrought-iron curb, or continuous circular box-girder. The aperture on the top is stiffened by another curb, and on this curb is erected a lantern, from which the whole space below is lighted. If the roof had been made of plate iron unstiffened, then it would, for so great a span, have probably sagged between the upper and the lower curbs. To prevent this the whole structure is stiffened by heavy girders of plate iron running from curb to curb, while to prevent distortion in any other way ring-girders at right angles to the rafter-girders run round the roof. All these girders have been put outside the roof instead of inside.

Coverings for Timber Roofs.—The coverings used for timber roofs are copper, lead, iron, tinned iron, slates of different kinds, tiles, shingles, and thatch of reeds or straw, and the relative degree of slope which each should have is determined by the mode of laying or forming the joints. Taking the angle for slates to be $26\frac{1}{2}°$, the following Table will show the inclination that may be given for other materials, and the weight of each material on a superficial foot of the inclined surface:—

Kind of Covering.	Inclination to the Horizon.	Height of Roof in parts of Space.	Weight per Super. Foot.
	° ′		lbs. lbs.
Asphalted felt	3 50	$\frac{1}{30}$	·3 to ·4
Tin	..	..	·7 „ 1·25
Copper	..	..	·8 „ 1·25
Lead	7 36	$\frac{1}{15}$	5·0 „ 7·0
Zinc	..	..	1·25 „ 2·0
Slates, large	22 0	$\frac{1}{5}$	9·0 „ 11·0
„ ordinary	26 33	$\frac{1}{4}$	5·0 „ 9·0
Thin slabs of stone or flags ..	29 41	$\frac{2}{7}$	20·0 „ 25·0
Plain tiles	..	..	15·0 „ 18·0
Pantiles	24 0	$\frac{2}{9}$	6·0 „ 8·0
Thatch of straw, &c.	45 0	$\frac{1}{2}$	6·0 „ 10·0

Whenever it is desired to make a roof for a dwelling-house which shall be cool in summer and warm in winter, and be durable as well, it should always be boarded over before the slates are put on. In the roofs of ordinary dwelling-houses this is not done, and hence it arises that the garrets, if the house happens to be provided with them, are frequently unendurable in summer and winter from the excessive warmth at one time and extreme cold at the other.

Compound Roofs.—Roofs are occasionally constructed of timber and iron, and when the two materials are judiciously and scientifically combined, the compound structure is of an economical character. In modern roofs the use of wrought iron in combination with wood has been more extensive than formerly. Instead of being confined to straps and screw-bolts, iron is now used for king and queen bolts, ties and struts, and sometimes for principal rafters and purlins. But for common rafters, which require to be battened or boarded over, and for tie-beams, which have to carry a ceiling, wood has the advantage, from the facility with which other timbers can be fixed to it. When the roof is not required to support a ceiling, an iron tie-rod is preferable to a wooden beam. For purlins, principal rafters, and struts, rolled iron can now be provided of almost any suitable shape and size.

6643.

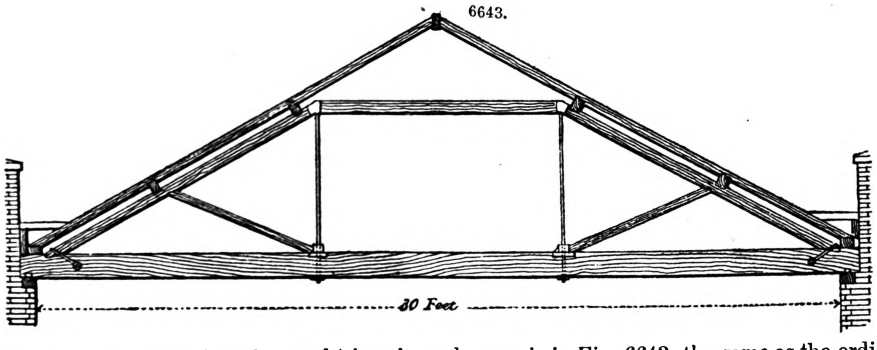

The simplest application of wrought iron in such cases is in Fig. 6643, the same as the ordinary queen-post truss, except that iron rods are substituted for the queen-posts. The heads of these

rods are fixed to the iron sockets, which take the ends of the straining beam and principal rafters. The lower ends pass through the cast-iron shoes, which receive the feet of the struts that support the principal rafters, and are continued through the tie-beam and secured by a nut, which enables the bolts to be screwed up tight.

Fig. 6644 shows a form of roof suitable for a shed, where as much clear space as possible in height is required. The strain on the rafters, where connected by the collar-beam, is relieved by iron tie-rods, which are suspended at a considerable height by the king-bolt, to which they are secured by a screwed end and nut. The lower ends of the ties are fixed to the cast-iron boxes, as shown in Fig. 6645, by which the rafters are attached to the longitudinal bearers over the columns which support the structure.

A better arrangement, if it did not interfere with the space in the roof, would be to keep the tie-rods horizontal, or nearly so, and to continue the king-bolt down to it, as there will always be a tendency to thrust out the sides when the ties are so much inclined, as in Fig. 6646, the arrangement by which the rafters and ridge pieces are secured in a cast-iron socket.

6644.

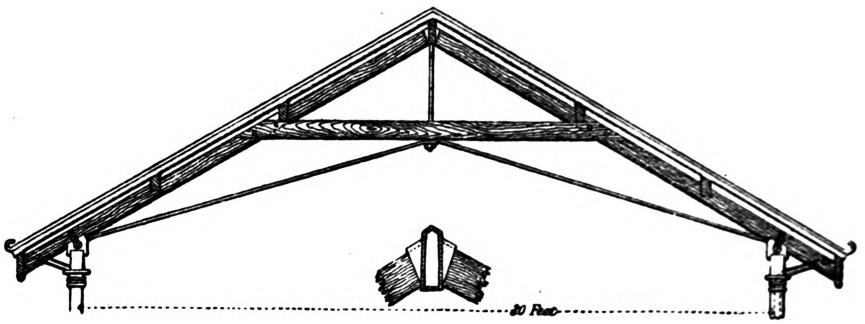

6645.

6646.

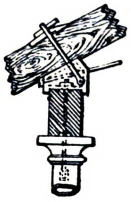

6647.

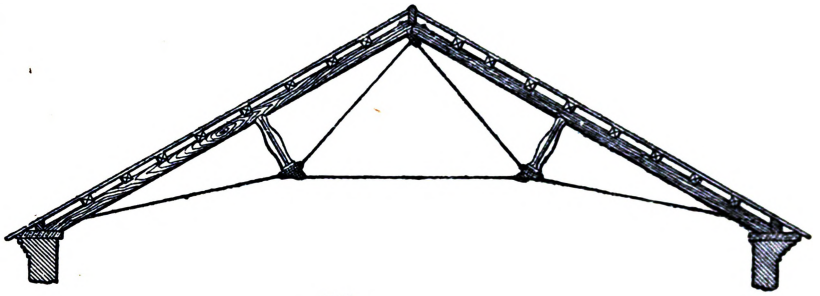

6648.

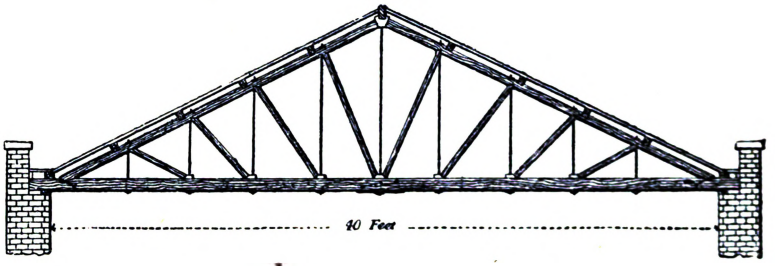

A better arrangement for an open roof, with iron ties and struts, is shown in Fig. 6647. The tie-rods are made to pass through the feet of the rafters, and are secured to a continuous plate of wood, which rests on the walls. The struts in the drawing are supposed to be cast iron, but a piece of wrought T or angle iron would be preferable, and could be as readily secured to the ties and rafters. Fig. 6648 is a very superior arrangement for a roof which has to carry a ceiling. In consequence of the suspension of the tie-beam at so many points, the timber is not required to be of so large a scantling as in the ordinary queen-post truss. In long spans, owing to the length required for some of the struts, wrought iron should be used in preference to wood. There is no reason why the principle on which girders are used in the construction of bridges should not be applied to roofs.

A good example of a compound roof is represented in Figs. 6649 to 6652. It is erected over the lecture room at the London University, and possesses the somewhat peculiar feature of compound purlins of wood and iron combined.

Cast iron has also been extensively used in combination with wrought iron and wood in the

construction of roofs, but its adoption is not to be recommended where there is a liability to sudden strains, particularly cross strains.

6649.

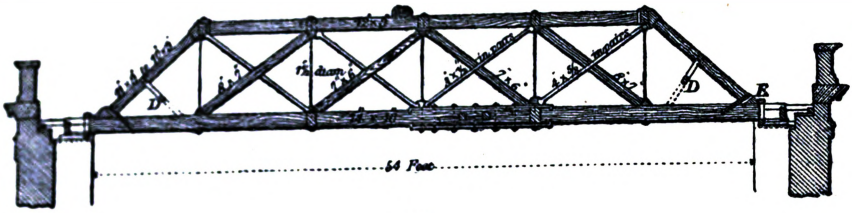

6650.

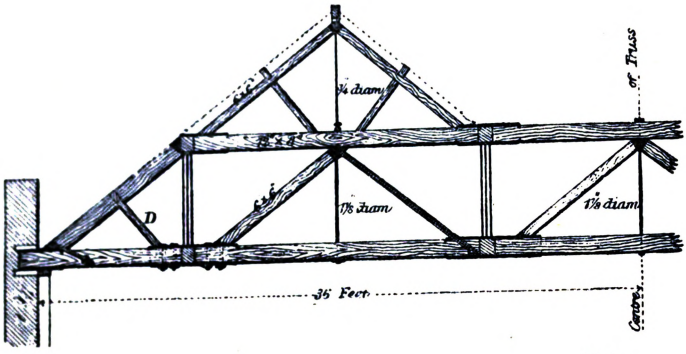

6651.

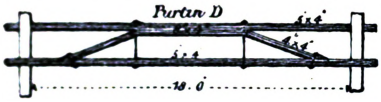

6652.

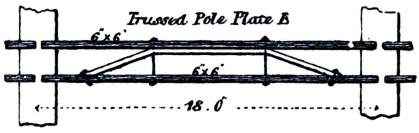

Iron Roofs.—The use of cast and wrought iron for roofs has so many advantages that their employment, especially that of the latter, is very general. Economy, lightness, portability, and facility of erection render this material peculiarly well adapted for use in all countries, and particularly so in those in which ordinary building materials are scarce, and skilled labour of an expensive character.

Arched Iron Roofs.—Roof principals of the first class having a horizontal thrust must in their construction have such stability at the springing point as will offer to this thrust the necessary resistance.

The abutments for arched principals can be obtained in various ways. The most natural method might at first sight appear to be in making the walls on which the arch rests sufficiently strong. In almost all cases, however, this is too expensive, and when it is adopted, the wall is only thickened at the points where the principals rest, the part thus thickened forming a buttress or abutment. In most instances a tie is introduced to take the horizontal thrust, as may be seen in some of the examples.

The equation for the horizontal strain at any point of an arch is $H = \frac{f w d x}{y}$, in which H = the horizontal strain, w = the load between the centre of the arch and the given point. If the crown be taken as the origin, x and y are the two co-ordinates. From this equation may be deduced the one commonly used in determining the strain at the centre of any arch, girder, or suspension chain. Integrating we obtain $H = \frac{w x^2}{2y}$. When $x = o$ $H = o$. When $x = \frac{L}{2}$, as it is for the central strain, the equation becomes $H = \frac{w L^2}{8}$, but $w L = W$, and $y = D$, so that we obtain $H = \frac{W L}{8 D}$, the same equation deduced in our article Materials of Construction, Strength of. The other strain to be determined is the resultant pressure at any point, and is compounded of two others, the horizontal strain and the weight. The resultant pressure acts at a tangent to the line of equilibrium, and may be thus obtained;—Put S for the resultant strain, and θ for the angle the line of pressure makes with the vertical, and we have S = H cosecant θ.

It has already been stated that arched roofs may be classed under one of two heads, those having solid and those having open or braced webs. The first of these will now be considered, for which purpose it is necessary to have clear ideas of the general manner in which the arch is affected by strains. On the supposition of a uniformly distributed load, and that the form of the arch is a parabola, the horizontal thrust may be assumed to be constant from the crown to the springings. This thrust answers to the strain at the crown, and has been ascertained by the above formula.

This, it will be seen, is the same formula that obtains for the strain on the flanges at the centre of a girder having the same span as the arch, and a depth equal to its rise. In the diagram, Fig. 6653, let L = 50, R = 10 ft. 0 in., and making W = 20 tons, the value of the central strain is $S = \frac{20 \times 50}{8 \times 10} = 12{\cdot}5$ tons. Similarly, the strain at any other point may be found by calculation, but it is not so correct as that given by a diagram, for the reason, already stated, that the conditions assumed in theory and in the calculation do not actually prevail when the arch takes its real form. We will first ascertain the strain by calculation at any given point, H in Fig. 6653. Let W^1 equal the load upon the arch situated between the crown and the point H, and S the strain already found at the crown. Putting S^1 for the strain at H, the equation becomes $S^1 = \sqrt{S^2 + W_1^2}$. In the present instance S = 12·5 and W_1 = 5 tons; so that $S^1 = \sqrt{12{\cdot}5^2 + 5^2} = 13{\cdot}46$ tons, equals the strain at the point H. This is a special example, but generally, if S be the strain at the crown, W the weight between the crown and any point x where the strain is required, then the strain S^1 at that point is obtained from the formula $S^1 = \sqrt{S^2 + W^2}$.

It is obvious that the greater the discrepancy between the real form of an arch and a parabola, the wider will be the departure in practice from the results arrived at by pure theory. We may now proceed to calculate our strains by diagram, and first for the strain at the crown.

Referring to Fig. 6653, let F G represent a portion of the radius of the arch; draw D E at right angles to it. D E will consequently be a tangent to the arch at the point H. Make H K, drawn vertically, equal to the load situated between the crown of the arch and the point H. Draw K L horizontally to meet H E at L, then K L is equal to the strain at the crown C. In Fig. 6653, H K is made equal to 5 tons, on a scale of 20 tons to 1 in., and K L measures exactly 12·5 tons by the same scale, which is the value already found for the central strain by calculation. As the strain at the crown is horizontal, the calculation and the diagram coincide accurately in the result, which is not the case at any other point of the arch, the discrepancy increasing the nearer the point approaches the springing. It is not difficult to demonstrate this mathematically. In the triangle H K L we have H K = K L × tangent of angle K L H. Put angle K L H = θ, then H K = K L × tan. θ. Draw the line A C, then A C is parallel to D E, and the triangles H K L and A B C are similar. Consequently the angle K L H equals angle B A C. Calling this angle θ' we have $\theta = \theta'$ and H K = K L × tan. θ_1. By construction the tangent of angle $\theta' = \frac{B\,C}{A\,B}$. And B C = R and A B = half span of arch = $\frac{L}{2}$, so tan. $\theta' = \frac{R}{\frac{L}{2}}$. Substituting this value in the equation, we obtain H K = K L × $\frac{R}{\frac{L}{2}}$. Referring to the diagram in Fig. 6653, and using the same notation as before, H K = $\frac{W}{4}$ and K L = S = the strain at the centre of arch. Putting in these values in the formula we get $S = \frac{\frac{W}{4}}{\frac{2\,R}{L}} = \frac{W \times L}{8\,R}$, which is the formula given at the commencement of our article. It should be remarked here that the value of R in both Figs. 6653 and 6654 is about twice that which would be given to it in practically designing a roof. The reason it is so proportioned in the diagrams is to allow the construction of the strains to be better shown, which would not have been the case had the arch been drawn too flat. The space at our command does not permit of the diagrams being made on the same scale as they would be in the engineer's and architect's office.

6653.

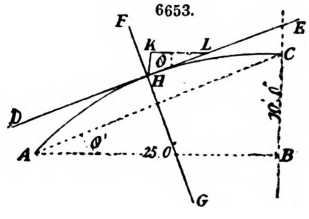

6654.

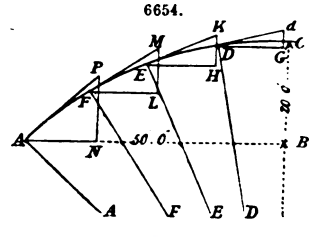

Having shown the method of ascertaining by diagram and calculation the amount of the central strain, it now remains to find that at any other point by the former mode of analysis. Let us suppose that it is required to determine the strains at five equidistant points of the arch represented in Fig. 6654. That at C has been already determined for the case in Fig. 6653, and can be equally readily obtained for that in Fig. 6654. In this instance L = 100, W = 40, and R = 20, and the central strain S will be equal to 25 tons. To determine the strains at the other points D, E, F, and A, draw the lines D D', E E', F F', A A', towards the centre of the circle of which the arch is a segment. They are therefore parts of the several radii, and the lines D J, E K, F M, and A P, drawn perpendicularly to them respectively, will be tangents to the arch at the points where the several strains are required. From these points draw the horizontal lines D G, E H, F L, and A N, making

each equal the strain at the centre, or equal to 25 tons. From the end of these lines draw verticals to meet the tangents, and the several strains at the points D, E, F, G, will be given by the lines D J, E K, F M, A P. If they be measured on the diagram upon a scale of 20 tons to 1 inch, they will read 25·5, 27, 29·5, and 34·5 tons respectively, or rather more than what they would amount to by calculation by the ordinary formula. There is, however, an accurate method of calculating the strains at any point which will serve to check those obtained by the aid of a diagram. The strains vary as the secant of the angle which a tangent at any point makes with a horizontal line. When this angle is known the strains can be determined.

In Fig. 6655, let the diagram be a reproduction of that in Fig. 6654, only on a smaller scale, in order to allow of the centre of the circle being shown. Suppose it is required to find the strain at the springing of the arch; as before, let A P = S^1 = required strain, S = that already found for the crown, and put θ for the angle P A N. Since the angle P A O is a right angle, the angle P A N is the complement of the angle B A O. Making this latter equal to θ', we have $\theta = (90° - \theta')$. If the angle θ' were known, the problem is solved. To find θ', we use the trigonometrical equation of the triangle A B O, in which the angle A B O is a right angle, and B O = A B × tan. θ', or tan. $\theta' = \frac{B O}{A B}$. But B O is equal to the radius of the arch minus its rise. Calling the radius of the circle R^1, then B O = R^1 − R. When the span and rise of an arch are given, the radius is found from the equation $R^1 = \frac{L^2 + R^2}{2R}$, when L is the half span. In this case $R^1 = \frac{50^2 + 20^2}{2 + 20} = 72·5$ ft. From this B O = 52·5 ft. By logarithms we have, log. tan. θ' = log. 52·5 − log. 50 + 10. Solving we find $\theta' = 46° 24'$. Consequently $\theta = 43° 36'$. Referring to Fig. 6655 in the triangle A P N, A P = $\frac{A N}{\cos. \theta}$. But A P = S′ and A N = S′, therefore S′ = $\frac{S}{\cos. \theta}$. By logarithms log. S′ = log. S − log. cos. θ + 10. Putting in the values for S and θ', we have log. S^1 = log. 25 − log. cos. $43° 36' + 10$. Solving for S^1 we finally obtain S^1 = 34·52 tons, which is the same value as that given by the diagram in Fig. 6654. If the values of the secants of the other angles made by the tangents with the horizontal lines be found, the resulting strains at those points can be also determined. As many points may be taken as considered desirable, but unless the arch is very large, four points will be sufficient for practical purposes.

6655.

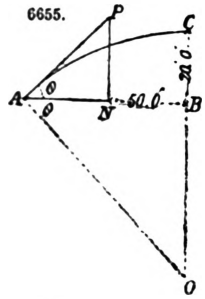

6656.

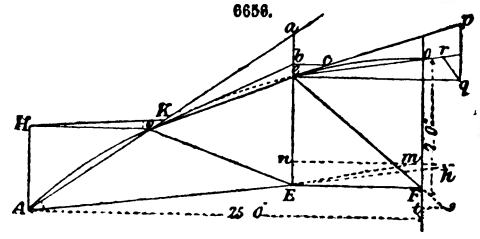

. Roofs of trussed ironwork in the arch form are especially well adapted for roofs of large span, not only on account of the reasons already mentioned, but because the strains upon the bracing are comparatively small, and therefore the full value of the trussed arch is not obtained in examples of limited span. The example of a trussed arch roof, Fig. 6656, has a span of 50 ft., a depth of truss of 7 ft, and is supposed to be loaded with 2 tons on the whole roof, or 1 ton on the half principal shown in the figure. The thick lines represent the parts in compression, and the thin ones those in tension, from which it is at once evident that the whole of the upper flange or bow is in compression, and the lower or tie in tension. Also B E, C F are struts, and C E, D F ties. When the design of a trussed roof is of a very complicated nature, it is not easy to determine, as in the present case, by mere inspection those parts which are in compression and those which are in tension. It is not until some progress has been made in the analysis of the strains that the manner in which they affect the various members of the truss becomes apparent. Having ascertained those bars which are struts and those which are ties, the next point is to examine into the distribution of the load. Referring to Fig. 6656, we have a total load of 1 ton upon the half principal, and it is divided as follows;—There will be one-third situated at each of the points B and C, and one-sixth at A and D. Thus we shall have at B and C a weight of 0·33 ton, and at A and D a weight of 0·165 ton. It will, however, be apparent, by a glance at the diagram, that the weight of 0·165 ton at A is supported directly by the vertical reaction of the abutment, and consequently produces no strain whatever on any part of the truss. Its action may be therefore ignored, and the total weight on the principal producing strain on its various parts will be equal to 0·825 ton instead of 1 ton. This theoretical assumption will not hold, unless the distance A B or unsupported length of the rafter, between the abutment and the strut B E, be of sufficiently limited dimensions so as not to allow of any bending taking place. This is always practically effected by subdividing the roof, by the introduction of the sloping struts, into lengths which are too small to permit any appreciable deflection.

The relative positions of the subdivisions of the load being adjusted, the next operation is to ascertain the strains upon the various bars, and in the analysis, as in all other calculations, we must always proceed from the known to the unknown. At the point of support A, the vertical reaction producing strain upon the roof is the sum of the weight at B, C, and D, since they must all be ultimately transferred to that point. This reaction is therefore equal to 0·825 ton. We have

therefore three forces at the point A, making equilibrium at the point A, namely, the vertical reaction of 0·825 ton, the strain along A B, and the strain in A E. It must be kept in mind that although in practice the arch is a segment of a circle, it is supposed in the diagram to consist of the polygonally-shaped figure A B C D, the length A B, B C, and C D being straight lines. Each of these is, in fact, regarded as a separate bar, or part of the upper flange. On a scale of 1 ton to the inch, make A H equal to 0·825 ton; join A B, and produce the line to any convenient length. From the point H, draw H K parallel to A E, meeting A B produced in K. Measuring by the same scale, A K will give the strain upon A B, and H K that upon A E, respectively equal to 1·90 and 1·57 ton. It should be observed here, that were A B in the same straight line with B C, as occurs in the ordinary inclined rafter, then the strain upon A B would be the same as that upon B C, plus the additional strain due to the weight at B. But as in the diagram the direction of the different bars of the arch is continually changing, the question is considerably more complicated. To find the strain upon B C, we must find the resultant of the strain upon A B and the weight at B. Upon A B produced, lay off B a = A K equal to 1·90, the strain already found for A B; draw $a\,b$ vertically equal to the weight at B equal to 0·33 ton; join B b, which is the resultant required. From the point B, draw $b\,d$ parallel to B E, and B d will give the strain upon B C, and $b\,d$ that upon the strut B E. There now remains only the central bar C D of the upper flange upon which to ascertain the strain. This, allowing for the change of direction, will evidently be less than that upon B C, by the action of the weight at C, plus the pull on the queen-rod C E. Before the strain upon C D can be determined, that upon C E must first be obtained. This obviously proceeds from the pull at the point E, for since C E is a tie it cannot be affected by the weight at the apex C, which is supported directly by the arch and the strut C F. At the point E, there are two forces acting, a compression along B E, and a tension along A E, and the resultant of these will pull upon both C E and E F. The amount of these pulls or tensile strains may be thus ascertained. Produce A E to any convenient length, make E h equal to H K, equal to the strain upon A E; from h draw $h\,m$ parallel to B E. The resultant of the strains in A E and B E will be represented by E m. From m draw $m\,n$ parallel to E F, and $m\,n$ will be the strain upon E F, and E n the pull upon the queen-rod C E. The compression upon C D can now be calculated. Produce B C, and upon it lay off C p = B d; from p draw $p\,q$, equal to the weight 0·33, at C plus the pull E m; from q draw $q\,r$ parallel to C F, and the strain upon C D is measured by C r, and that upon C F by $q\,r$. The question of what becomes of the weight D at the central apex will probably be now demanded. As D F is a tie, the whole of the weight D is conveyed in equal subdivisions to each of the two abutments, and it has already been accounted for, since it was included in the value of A H, which was made equal to the vertical reaction at A. There is yet one more strain to be determined, and that is the pull on the king-rod D F. The rod D F can only be affected by the strain upon the strut C F, since it is at right angles to the tie E F. But the corresponding strut upon the other half of the girder will bring a similar strain upon D F; so that by producing C F, making F S equal to twice $q\,r$, and drawing S t parallel to E F, the total strain upon D F will equal F t. The strain upon D F is in fact the vertical resultant of the strains in C F, and the corresponding strut upon the other half of the roof.

The strains having been determined, they should be tabulated as in Table I., and preserved for future reference. Before, however, considering the analysis as thoroughly trustworthy, a few of the strains should be checked by some independent method, as errors will frequently occur in estimating them by means of a diagram, which are only perceived by employing another process of analyis. The strain upon E F may be checked by drawing from H the line H B parallel to E F. The line H B will equal $n\,m$, the strain already found.

TABLE I.

Bars.	Strains.	
A B	+ 1·90	Arch.
B C	+ 1·90	
C D	+ 1·65	
A E	− 1·58	Tie-rod.
E F	− 1·33	
B E	+ 0·25	Struts.
C F	+ 0·22	
C E	− 0·25	Ties.
D F	− 0·22	

There is this general principle to be borne in mind in determining all strains upon trussed constructions by diagram. Whatever may be the amount arrived at by summation, if the same value for the strain is also obtained by an independent operation, it is scarcely within the limits of possibility that it should be otherwise than correct. As an example of our meaning, take the strain found on the end of the bow A B. It is determined at once by the plotting upon the vertical line A H the reaction of the total load upon the half roof. But if each weight were treated seriatim, the sum of the separate strains would be found to equal that obtained in the diagram. It will be of great advantage to those who are unacquainted with the method of analyzing strains by graphical diagrams to work this out for themselves on a large scale, and tabulate the several strains arising from each weight. The strain on the central bar of the arch C D may be checked by calculation. Let S equal the strain, L the half span, G the distance of the centre of gravity of the half load from the centre of the girder, D the depth of the truss, and W the total load upon the whole roof. Then we have $S = \frac{W\,(L - G)}{2 \times D}$. Substituting in this equation the values for the letters, we get

$S = \frac{2\,(25 - 12{\cdot}95)}{2 \times 7}$, and solving the equation, S = 1·72 ton, which differs only by 0·07 from that arrived at in the diagram, a quantity that may be regarded as inappreciable. In conclusion, it should be mentioned that wherever a trussed principal is employed, in which a sloping rafter is used instead of an arch, the method given in the present case is not applicable. It is not difficult, however, to apply another method which gives equally true results.

In the construction of wrought-iron arched roof principals, the rules by which stone arches are designed need not be adhered to. A stone arch must be of sufficient thickness to enclose within itself all possible lines of pressure resulting from various loads, because it is assumed that the voussoirs of an arch cannot well resist a transverse strain. In an iron arch, however, a material so specially suited to resist transverse strains is employed, that the outline of the arch may be designed without strict regard to the lines of pressure, if these are duly considered in determining the dimensions of the material.

The sections of arched ribs may, like those of girders, be made in many different ways. For small spans a single web-plate is generally used, but where the rib is more than 12 in. deep, a lattice or trellis system is preferable, as affording the necessary strength with a more elegant appearance. It is seldom, except in large roofs, that the flanges have any but a single T section; though in all cases the trough or box section, is peculiarly suitable for resisting the strains to which a roof is subjected.

If the trellis system with vertical struts is adopted, the diagonals need only be ties, as in trellis girders; but if a lattice or other triangulated system be used, all the diagonals should be struts, to meet the various lines of pressure to which the arch is exposed. An arched roof generally costs more than a trussed roof, if the expense of abutments is included. But if, by the position or arrangement of the building, abutments already exist, or if for other reasons they have to be provided, then an arched roof may be preferable to one of a trussed form.

We have selected three examples of arched roofs, the first of which is that over the central transept of the Crystal Palace, at Sydenham, England, and is remarkable as being almost the only example which exists of this form of roof. The other two examples comprise one of the solid web or plate type, and the other of the trussed or open web type. This last is the largest trussed roof erected, with the exception of that already described and erected for the Vienna Exhibition. The Crystal Palace roof is shown in general elevation in Fig. 6657. An elevation of a portion of the main rib is in Fig. 6658, and the details in Figs. 6659 to 6673. This roof, which has a span of 120 ft., is very peculiar in its construction. It is an arch of such a depth, that it acts partly as a girder, throwing upon its supporting structure a comparatively small horizontal thrust. The outer and inner outline of the arch is a perfect semicircle, struck from the same centre; and the rib has therefore an equal depth of 8 ft. throughout, the inner radius being 52 ft., the outer one 60 ft. The rib consists of a bottom and top flange, each consisting of two L irons 6 in. × 3½ in., and a ½-in. plate 10 in. wide, having an available sectional area of 9⅞ sq. in., as shown in Figs. 6659 to 6661. These flanges are throughout the length of rib of equal cross-section, and are connected together by a double lattice-work, made of flat diagonal bars.

6657.

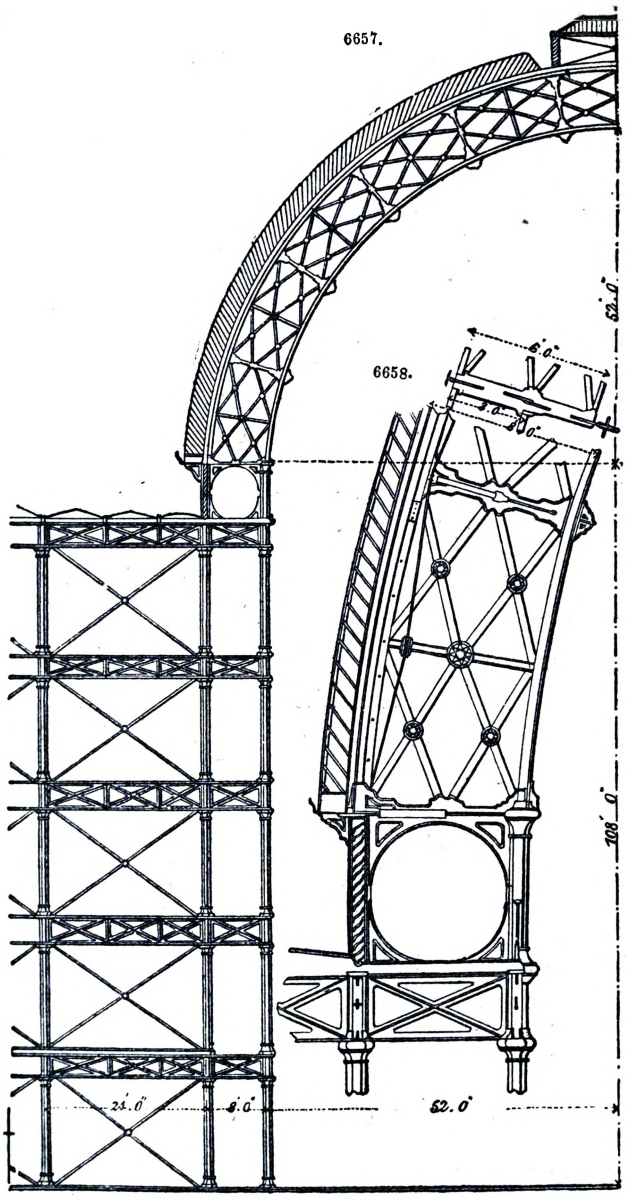

Each side of the rib is divided into eleven equal parts, between its springing and its centre. Each of these parts contains two diagonals, one above the other, and struts radiating to the centre, one of the struts being a cast-iron distance strut carrying purlins and connecting them to main rib, and

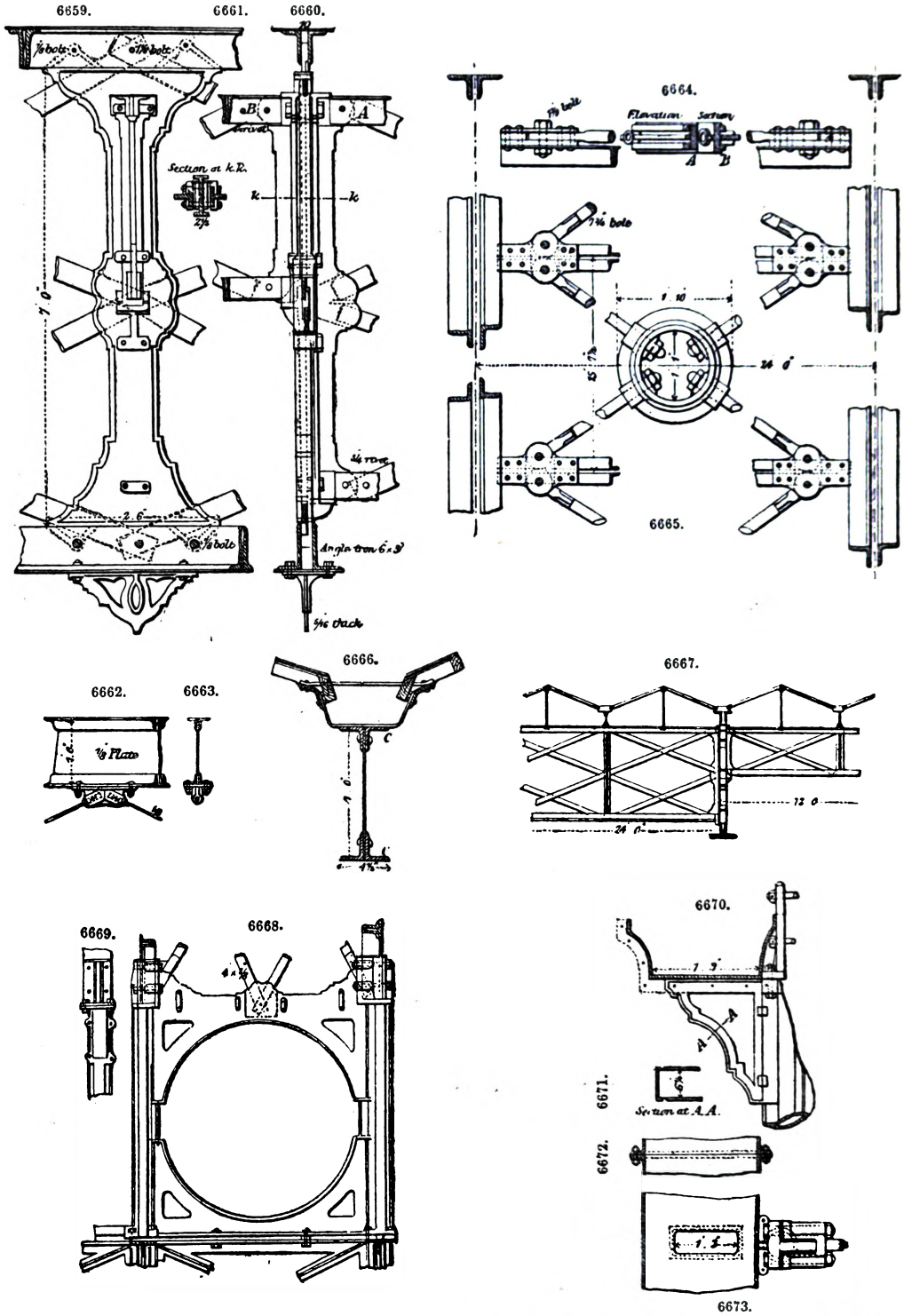

the other a wrought-iron strut made of two channel irons 4 in. × 1½ in. × ¼ in., having two distance pieces riveted between them. The joints in 6 in. × 3 in. ⌊ irons are made alternately at intervals of about 14 ft., proper distance pieces filling out the 3⅛-in. space between ⌊ irons, its ¾-in. rivets act

only with single shearing area. At intervals of about 1 ft. 9 in., distance pieces are put between L irons, and fixed also by ¾-in. rivets, the same as in wrought-iron struts. The diagonal bars are throughout 4 in. wide, ⅜ in. thick, with an available sectional area of 1·2 sq. in. running always through two diagonals, and are not straight. But they are, for the sake of architectural appearance, so arranged that they cross exactly in the middle of the rib, and in one-fourth of its depth from its outer and inner outline. They are connected at intersections by a ¾-in. rivet. A round ornamental knob, made in two halves, being connected together by three ⅜-in. tap-screws, covers this joint. The ends of diagonals and wrought-iron struts are connected with the L irons by a 1⅛-in. bolt, as in Fig. 6659.

The cast-iron distance struts are shaped according to the wrought-iron structure which they have to strengthen, and according to the cast-iron end pieces of purlins which are bolted to them by either six or four ¾-in. bolts, as they belong to the 6-ft. or 3-ft. deep purlins respectively.

The strut has accordingly a cross-section of 7 sq. in. sectional area; its ⅜-in. web is widened out to a pocket for letting the diagonals through, intersecting at this point. The web at top and bottom of strut is brought out to two lugs, which fit with a washer between the two angle irons, and are each bolted to same by one 1½-in. bolt. Proper bosses are cast on to the web for eight ½-in. bolts connecting purlins to same. Underneath these struts, ornamental pendants of $\frac{5}{16}$-in. metal are screwed on to soffit of rib by four ½-in. bolts. There are two kinds of purlins, A and B in Fig. 6660, one kind being 24 ft. long, 6 ft. deep, and the other 72 ft. long and 3 ft. deep. The first serve for bracing two ribs of one pair together, and the others act as pure purlins between each pair of ribs, that is, they have only to support the intermediate rafters.

The 6-ft. deep purlins consist of a top and bottom flange of two L irons, 3 in. × 2 in. × ¼ in., of 2 sq. in. available sectional area; and are connected by wrought-iron struts and double lattice-work. Besides carrying intermediate rafters, they serve as bracing of main ribs for giving them lateral stiffness. The struts are 8 ft. apart, and consist of two T irons, 2 in. × 2 in. × ¼ in., with 1½ in. available sectional area, having between them in all cases two diagonals, one above the other, similar to the lattice-work in main rib. The diagonals are flat bars, 3 in. wide, $\frac{5}{16}$ in. thick. They are straight, and run always through two divisions of 8 ft. At their ends, proper cast-iron distance struts are fastened to L irons by one 1⅛-in. bolt, and the web is again properly widened out to a pocket for receiving the ends of two diagonal bars, which are riveted to the casting by one ¾-in. rivet. The 3-ft. deep purlins serve only for carrying the intermediate ribs. They consist of a top flange of two L irons, 4 in. × 2 in. × ¼ in., 2·44 available sectional area in centre, and a bottom flange of two flat bars being at the end 4½ in. × ⅜ in., in centre 4½ in. × ¾ in., with 4·68 sq. in. available sectional area. These flanges are connected by vertical struts 8 ft. apart, and diagonal tie-bars decreasing in the three diagonals next to end, from $\frac{11}{16}$ in. in thickness to ½ in. to $\frac{5}{16}$ in. to ¼ in. They are respectively fixed to top and bottom flanges by a 1¼-in., 1⅛-in., 1-in., and ⅞-in. bolt. All the bars are 4 in. wide, the struts are of cast iron of a X cross-section, 2 in. × 2 in. × ⅜ in., and diagonals of wood are put across the diagonal tie-bars, 4 in. wide, ¼ in. thick, and fastened by ⅜-in. bolts.

Both purlins carry above each strut an intermediate rafter, Figs. 6662, 6663, having the same outline as the main rib. It is made of a ⅛-in. web-plate 1 ft. high, in length about 8 ft. 5 in., with a top and bottom flange consisting of two L irons 2 in. × 2 in. × ¼ in., in length about 16 ft. 10 in., with 1½ sq. in. available sectional area. A special arrangement is made for bracing purlins sideways to these intermediate ribs. The purlins at the bottom end of their vertical struts are suspended by two rods to points of the intermediate ribs, being just in the middle of two bearings or purlins. For that purpose, a cast-iron shoe is fixed to the bottom L irons of rafter at those points by four ½-in. bolts of a proper shape, to receive the ends of the hanging rods, ⅝-in. in diameter. The other ends are widened out to an eye, which is connected to the bottom flanges of the 6-ft. or 3-ft. purlins by the bolts, fixing end of vertical strut to the same. The details of this connection are for both purlins the same, except the altered angle of the hanging rods. Next to each of the cast-iron end struts of purlins a kind of pocket is riveted by eight ¾-in. rivets, consisting of two ⅝-in. plates, with two 1¼-in. thick distance pieces between them, for receiving the ends of wind-ties. These are flattened out to eyes, and fixed by a 1½-in. bolt. The wind-ties are, throughout, round rods of 1¾ in. diameter, and form the diagonal bracing between main ribs, as shown in Figs. 6664, 6665. At the point where they cross each other they are connected by a ring, to which, each end of the four is screwed in the usual way. The ring is in this case of cast iron, and has a sectional area of 9⅝ sq. in., strengthened by proper bosses round the bolt-holes, and, besides, by two wrought-iron rings of 1 in. sectional area, put on while red hot. This connection serves for bringing a strain on the diagonal bracing rods. The covering of this roof is entirely of glass, on the ridge-and-furrow principle.

The main and intermediate ribs carry wrought-iron gutters, 9 in. wide at the top, 7 in. at bottom, 4 in. deep, shown in Fig. 6666. They are riveted to top L irons of ribs with ½-in. bolts, about 9 in. apart alternately, and to intermediate main ribs with ⅜-in. bolts in the same way. To the edge of this gutter an L iron 1½ in. × 1½ in. × $\frac{3}{16}$ in. is riveted, and to this a piece of wood 1¼ in. × 2¼ is fixed by ⅜-in. screws, about 6 in. apart. Into this piece of wood the ends of the sash-bars are let in, about 1 ft. apart, the top being fixed to the ridge. This miniature roof runs right along the whole rib, from the main gutter to the lower standards of the ventilator, and is hipped at its ends. The main ribs, as well as intermediate ones, carry at their crown, over the cast-iron distance strut next to centre, a lower standard of cast iron 5 ft. 10½ in. high of H cross-section. The sides are filled in with wood, to which the lower plates are fixed. The ventilator is covered, as the other parts of roof, by a number of similar small hipped roofs, Fig. 6667, formed by mere slanting sash-bars, having in this case only wooden gutters, each supported by the standard in centre of each rib. The outer standards of the ventilator are held up by a diagonal bracing running from one to the other, and consisting of ¼-in. round rods, which pass through a slotted hole, spaced out in the middle one. A wrought-iron gutter runs along the base of the outer standards, supported by wood boarding, for conducting the water, which drops down from the ventilator covering to the gutters on top ribs. The main rib weighs 10 tons. The purlins, which are 6 ft. deep, weigh each 12 cwt., those 3 ft. deep weigh each 1 ton 4 cwt. The total ironwork in one bay of 86 ft. weighs 61 tons 3 cwt. Each of the main ribs is supported by two columns 8 ft. apart, so that each of the flanges starts over one of the

columns. This is effected by means of a cast-iron square frame 8 ft. 8 in. wide and 8 ft. high, shown in Figs. 6668, 6669, bolted to top of each column by four 1-in. bolts, and also by four 1-in. bolts to top of girder connecting top of columns. It consists of two pieces of the same section as the columns, connected by a $\frac{3}{4}$-in. web with a large circular hole taken out in the middle, and smaller ones in the corners. Proper flanges are cast on the top corners of it, to which each of the flanges is bolted by six $1\frac{1}{8}$-in. bolts, by means of a strong bracket. The cross-sections of this frame, through the weakest part of the columns, has $25\frac{3}{4}$ in. sectional area, the octagon columns being 8 in. in diameter and 1 in. thick, the web and its flanges $\frac{3}{4}$ in. thick. The parts of frame acting as bracing to the angles have 9 in. sectional area. Appropriate pockets for receiving the ends of the diagonals are constructed in the upper end of web, the outline of which is shaped like that of the cast-iron distance struts. The two diagonals in the middle are fixed to it by one $1\frac{1}{4}$-in. bolt, and the diagonals at the springing of flanges by one 1-in. bolt each. On top of the outer column of frame, lugs are provided for fixing brackets of $6\frac{1}{4}$ in. inner width under the water outlets of main gutter by four 2-in. bolts, with 1 ft. 2 in. × 5 in. water-way. The main gutter, shown in Figs. 6670 to 6673, running along the whole roof is, on the average, 1 ft. 9 in. wide and 11 in. high. It is cast in lengths of 7 ft. $11\frac{1}{2}$ in., $\frac{7}{16}$ in. thick, the joints being made by eleven $\frac{5}{8}$-in. bolts. The intermediate ribs are supported by cast-iron standards 8 ft. high, resting on one of the cast-iron girders 3 ft. deep and 23 ft. $3\frac{1}{4}$ in. long, which serve in the whole building as bracing and floor, and also carry girders between columns 24 ft. apart. Such girders also brace the columns lengthways under the flanges of main rib. The before-mentioned standards have the section of half a column of 9 in. diameter, are of $\frac{5}{8}$-in. metal, and widened out at the top to a bracket, on which the base of intermediate rib is bolted by six $\frac{1}{2}$-in. bolts. The lowest of the purlins connected to the top of the frame for supporting main rib is also connected by four $\frac{1}{2}$-in. bolts to this bracket, and proper lugs are cast on the top of standard for fixing a bracket, by four $\frac{3}{4}$-in. bolts supporting main gutter at each 8 ft. The horizontal thrust of the main ribs is transmitted by the cast-iron frame to the system of columns, which are connected by cast-iron girders as described before, and well braced by diagonals fixed to ends of girders by means of keys.

At the intersection of vertical diagonals, a similar adjusting connection with a ring and screws, as that for wind-ties, is applied, the whole being hidden by an ornamental joint cover. The entire supporting structure up to the frame is very rigid. It is besides heavily loaded by bearing girders below floor level, and on one side by a fireproof flooring of brick arches, and on the other side by cast-iron girders fastened to brick foundations, and can take easily the thrust arising more from wind pressure than from the weight of the roof, which is taken partly by the rib itself, which is of a very great depth. The rain-water is carried off in the usual way by the hollow columns.

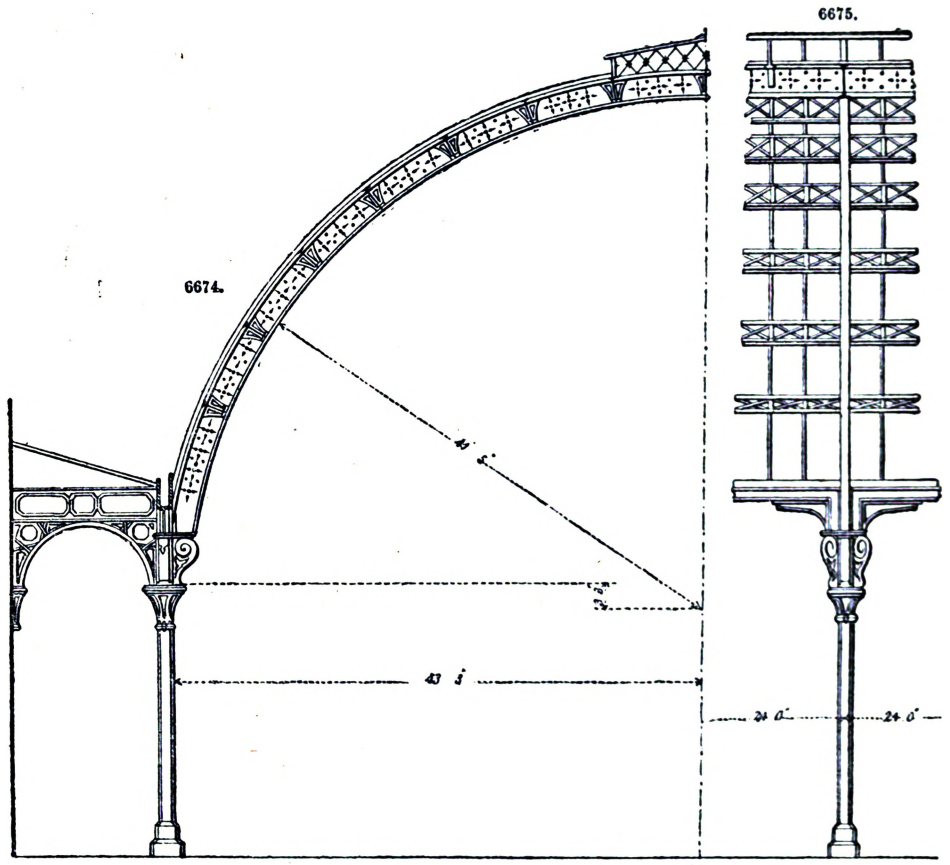

Arched Roof of the Derby Market Hall.—The area covered by this roof is a rectangle 192 ft. long and 86 ft. 6 in. wide, and shown in elevation and section in Figs. 6674, 6675. It is divided into eight

bays of 24 ft. each. The roof is hipped at both ends, and therefore there are only five ordinary principals of 81 ft. 5 in. clear span. The principals consist of wrought-iron arched ribs, the inner and outer curves being true circles struck from the same centre, with radii of 43 ft. 9 in. and 41 ft. 5 in. respectively, the springing of rib being 7 ft. 6 in. above centre. The height of rib at crown is 62 ft. 10 in. above the floor level. The wrought-iron rib is of the same depth throughout, and consists of $\frac{5}{16}$-in. web, and top and bottom flanges each of two L irons $3\frac{1}{2} \times 3\frac{1}{2} \times \frac{7}{16}$. An elevation of a portion to an enlarged scale is shown in Figs. 6676 to 6681.

6676.

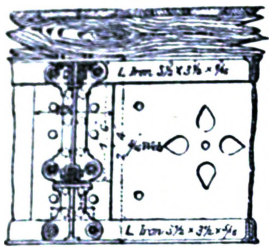

6677.

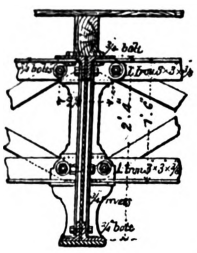

6678.

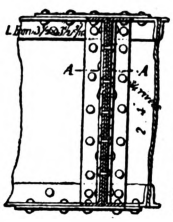

6679.

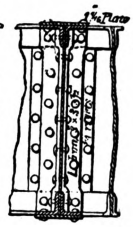

At every alternate supporting place of the purlins the web is joined by means of a joint plate 1 ft. 9 in. × $10\frac{1}{2}$ in., $\frac{1}{2}$ in. thick, which plate is also riveted on to the web at the other purlins as a strengthening plate. Angle irons extend always over two lengths of web. The web is ornamented in an original way. A neat design of holes is punched out of the solid plate, leaving the material intact where it acts in a similar manner to diagonals, Fig. 6676. These holes, of which the larger are about 6 in. in diameter, were punched out by a simple screw press, with long levers and heavy weights attached to them. When brought once into the swing, the mere momentum suffices to drive the punch through the plate, which is $\frac{5}{16}$ in. thick. The base of rib is horizontal, 2 ft. long, while the top flange is 2 ft. 5 in. above, carried vertically down. It is fixed by eight 1-in. bolts, on each side of the web, to the supporting cast-iron column, the angle irons of the bottom flange being carried round horizontally for that purpose. Riveting is done throughout with $\frac{3}{4}$-in. rivets, about 4 in. pitch. A board $8\frac{3}{4}$ in. wide by 1 in. is fixed to soffit of rib for mere appearance. The rib carries wrought-iron lattice purlins, at intervals of 6 ft. 9 in. On each side of such purlin a cast-iron strut is fixed to the rib and purlin by six $\frac{3}{4}$-in. bolts. By this connection, the projecting of the purlins beyond the ribs is prevented.

6680. Sectional Plan at AA

6681. Plan at Top.

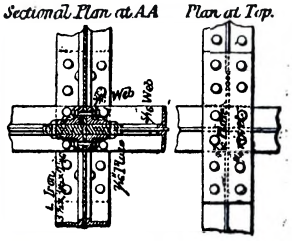

The purlins, which are 23 ft. 10 in. long and 1 ft. 6 in. deep, Fig. 6677, are radial, and are connected to the main ribs by means of the cast-iron end struts of $\frac{3}{4}$-in. metal by two $\frac{3}{4}$-in. bolts. They consist of a simple truss, the top and bottom flange of which are each formed by two L irons 3 × $3\frac{3}{8}$ in. The top flange is also connected by $\frac{3}{4}$-in. bolts to top flange of main rib. Cast-iron struts, 3 ft. pitch, and flat bar diagonal bracing $2\frac{1}{2}$ in. wide, increasing from $\frac{1}{4}$ in. to $\frac{3}{8}$ in., and $\frac{1}{2}$ in. in thickness, connect the flanges of the truss by $\frac{3}{4}$-in. bolts, serving as pins for diagonals. Wooden diagonals are also used for giving the appearance of a complete diagonal truss. The purlins support at each strut a wood rafter 6 in. in depth. Each alternate strut is so enlarged as to form brackets connected to the wood rafters by $\frac{5}{8}$-in. bolts, which are employed to keep the purlins in their radiating position. The other struts are brought out at the top to more lugs fixed to rafters by $\frac{3}{8}$-in. coach screws.

On the top of the main ribs a piece of wood $5\frac{1}{2}$ in. × 3 in. is fixed for nailing the 1-in. boarding thereto. The 1-in. boarding is covered by Italian zinc near the crown, and at the lower part by slates. A portion of the roof is glazed. The ends of the roof, it being hipped, are formed by ribs which are generally constructed like the ordinary ones, but stronger in cross-section. One ordinary rib weighs $5\frac{1}{4}$ tons. The weight of purlins, and standards for one bay, is $9\frac{1}{2}$ tons.

The ironwork for one bay of roof weighs $14\frac{3}{4}$ tons.

6682.

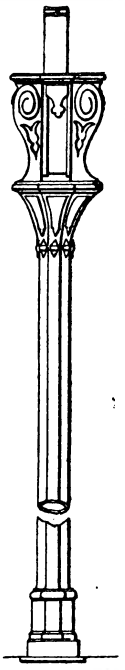

Each rib is supported by a cast-iron column, see Fig. 6682, 23 ft. high from floor, level to bottom of gutter, of an octagon section, and $1\frac{1}{2}$ in. thickness of metal. The base is also octagonal, 2 ft. 10 in. high, and at the bottom of 2 ft. inscribed diameter. At a height of 19 ft. 7 in. from floor level it widens out into an octagon capital of 2 ft. 9 in. inscribed diameter at the top. The base is plain. The top is a little ornamented by raised leaves. Above that, the column widens out into a kind of flat box, 4 ft. 2 in. high, with a bracket in front, supporting the horizontal plate to which the L irons of base of columns are bolted. The horizontal plate extends over the middle of the continued column, leaving on each side of bracket openings for receiving outlets of gutters. The column changes above this horizontal plate into a vertical piece of H section, 1 ft. × $10\frac{1}{2}$ in. × $7\frac{3}{4}$ in. × $1\frac{1}{4}$ in., 4 ft. × 4 in. high. The vertical part of the base of rib is bolted, as already mentioned, to the inner flange, $10\frac{1}{2}$ in. wide. The bracket in front appears as an ornamental bracket, of the same thickness as the flat box forming part of column, which is in elevation shaped like the two brackets supporting the outlets of gutter on each side of column, supporting outlets and the upper flange of the H iron, a frame 11 ft. 6 in. long

is fixed by six 1-in. bolts. It consists of an arch of 5 ft. 1 in. radius of bottom outline, and on the top a square frame 2 ft. 6 in. deep. All the main flanges are 8 in. wide $\frac{3}{4}$ in. thick, only the upper flange of frame 1 ft. wide × $\frac{3}{4}$ in., the web being $\frac{1}{2}$ in. thick.

The other end of the frame is suitably provided with a vertical flange and a lug at the bottom, for resting on the wall, being besides bolted to it by four 1-in. bolts. The horizontal thrust is in this roof taken by a very peculiar arrangement. On the top of the frames just described, on each end strong boxes are cast on, each of which contains a pin dropped into it from above. These pins connect the ends of diagonal bracing rods, with eyes on one end and key adjustment at the other. Along the outer boxes a wrought-iron flange runs throughout the length of the building. This flange, consisting of four plates 1 ft. × $1\frac{1}{2}$ in., and two L irons 3 ft. × 3 ft. × $\frac{1}{2}$ in. in centre, is connected by the pins to the diagonals. On the other hand, the gutter acts as the other flange of this horizontal girder, and is made sufficiently strong, being $1\frac{3}{4}$ in. thick. The single lengths of gutters are connected together by means of eight 2-in. bolts, being equal in sectional area to the strength of the gutter, of course piercing the web of the T-shaped part of column.

As the gutter is sometimes exposed to tensile strains, it requires therefore the above-mentioned area. There are eight diagonals, one for each bay, and the dimensions of the rods increase from the centre towards the ends. This roof offers in its longitudinal direction so great a resistance to the force of the wind that wind-ties are unnecessary. The gutter, which is 1 ft. × $5\frac{1}{2}$ in. deep, 1 ft. wide, and $23\frac{1}{2}$ ft. × 4 in. long, and $1\frac{3}{8}$ in. thick, has at distances of 3 ft. small shoes cast on, which receive the ends of the intermediate rafters, 6 in. × 3 in. The rafters are placed across the 12-ft. corridor at a proper slope, laid with 1-in. boarding and covered with slates. The other ends of these rafters rest on shoes on the wall surrounding the hall. The gutter is covered by a snow grating, which is 1 ft. × 3 in. wide, and cast in lengths of 6 ft. It rests on small supports fixed by two $\frac{5}{8}$-in. bolts to cross-pieces cast on the gutter at every second pair of shoes, and serving as distance pieces in the casting while it cools and prevents it from warping. These distance pieces must always be made with a top flange, otherwise the other parts of castings prove stronger in shrinking, and tear it in the middle. The rain-water is carried sideways by the bracket-shaped outlets of gutters into the column, and carried off to the drain pipes. The cast and wrought iron work of one bay of roof weighs $14\frac{3}{4}$ tons. The cast and wrought iron work of one bay of supporting structure weighs $17\frac{3}{4}$ tons.

6684.

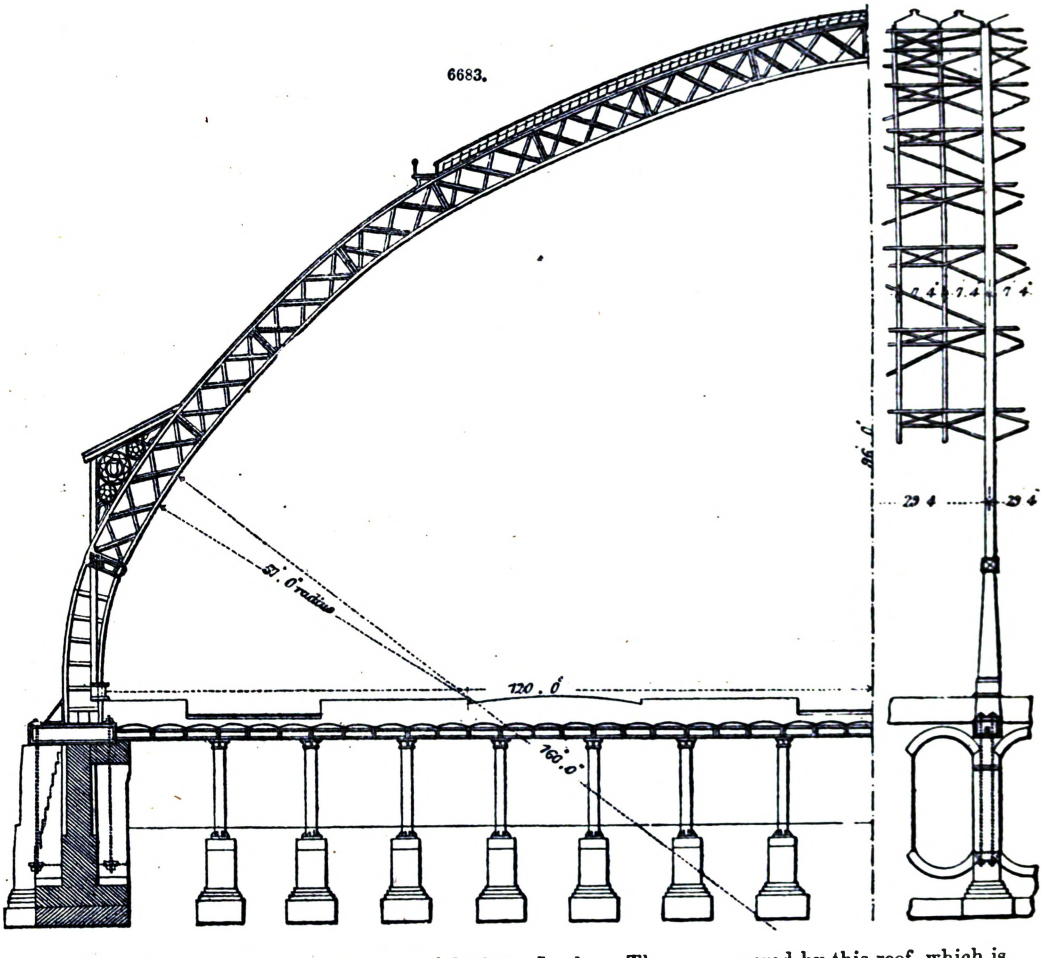

Roof of the St. Pancras Station, Midland Railway, London.—The area covered by this roof, which is 240 ft. in span, is 690 ft. by 240 ft. It is shown in Figs. 6683, 6684. The main ribs are 29 ft. 4 in.

from centre to centre, and have three intermediate ribs between them at equal distances apart, carried at every 18 ft. 6 in. by trussed purlins between the main ribs. The form of the ribs is entirely novel. They spring directly from the ground, and are firmly connected to massive brick piers below the floor level. The curve of the ribs is of two radii of 160 ft. and 57 ft., meeting at an angle in the centre 100 ft. above the level of rails. The ribs are 6 ft. deep, and formed with open box flanges 10½ in. deep; the flanges being braced together by diagonal channel irons and radial struts forming the ends of the purlins. The lower parts of the ribs, to a height of about 25 ft. from platform level, are constructed of plates and angle irons riveted together. The intermediate ribs are 10½ in. deep, and consist of angle irons braced with diagonal bars. The purlins are braced beams 18 ft. 6 in. apart. They are so constructed that they stiffen the main ribs laterally. The bracing is so arranged as to carry the proper proportion of each of the three intermediate ribs, besides assisting to keep the bottom flanges of the main ribs in place. The whole of the roof is braced horizontally to resist any strains that may be caused by the pressure of the wind either on the gable or on the side.

This roof virtually springs from the ground, the side walls being merely screens to hide the springings. The main ribs are tied underneath the platform by a system of wrought-iron girders for the purpose of counteracting the outward thrust which is common to arched roofs. This principle of providing for the horizontal thrust of large roofs of this description, has been successfully applied in other instances. When iron girders are thus employed, they not only serve the purpose of supporting a platform alone, but they can be made to cover a certain number of spans or intervals below, and the space thus obtained is utilized as vaults and cellars.

Trussed Roofs.—All the principals belonging to the second class are essentially girders or trusses, and consist of a top member which is in compression, a bottom member which is in tension, and various struts and ties arranged within the space between the two, to support the top member and the load at intermediate points, and to transmit the strains produced at these points to the end supports. Instead of attempting to divide into classes, according to their characteristic features, the innumerable forms adopted for trussed principals—a task hardly possible when it is considered how one system is mixed with another—a few forms have been selected which, directly or indirectly, will include most of the varieties which exist. The different kinds are shown in Figs. 6685 to 6693, and in

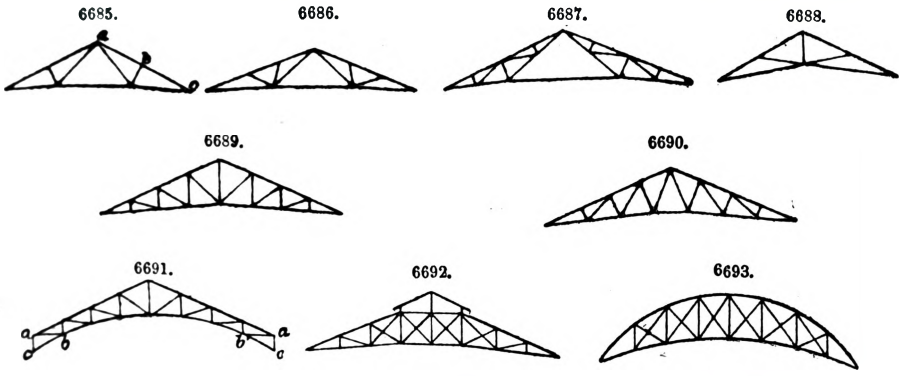

each case the thick lines represent compressive members, and the thin lines members exposed to tension. Fig. 6685 is of the simplest kind, and is equally serviceable for large or small spans. The short struts are often made of cast iron, and owing to their moderate length, this material can be safely and economically applied without excessive weight. The connections are symmetrical, and have a natural, unconstrained appearance. For the larger spans, those over 40 ft., it becomes necessary to construct the two upper rafters as girders to resist considerable transverse strains, because in a roof of such a size there must be purlins between the points a, b and b, c. Roofs with this kind of principals are sometimes called French roofs. Fig. 6686 is of the same kind as Fig. 6685, but with the strut so placed as to support the rafter in two points. Fig. 6687 is also of the same kind as Fig. 6685, but with longer rafters doubly trussed. The three forms just described are marked by the absence of vertical members, and for this reason the system is not a convenient one for hipped roofs, and for those roofs also where a longitudinal bracing between the principals is required in a vertical plane. Fig. 6688 may be considered as the elementary form of a class in which vertical members are introduced, and in which the struts are not perpendicular to the rafter which they support. The same system is carried out in Fig. 6689, where each rafter is supported at three points. This kind of truss is most commonly used for hipped roofs in which a vertical member is required at the junction of the hipped part. It is applied to spans up to 60 ft. Fig. 6690 resembles Figs. 6685 to 6687 in having the struts perpendicular to the rafters, and in having no verticals; but in the general arrangement of the parts and of the connections it resembles Fig. 6689. The advantages which this form of truss, Fig. 6691, affords are, the curved shape of the tie, and the favourable or large angle of the tie at its start, which is at a. The parts $a\,c$, and $c\,b$, may, or may not, form part of the truss, which is complete without them, between $a\,b$, $b\,b'$, $b'\,a'$, but they are useful as forming bracing with the columns or walls, thus rendering the complete structure of a building more rigid and self-contained than with any of the roof forms from Figs. 6685 to 6690. The designation of roof trusses is applied to forms in Figs. 6685 to 6692; the term girder being seldom used, although there is no important difference between trusses of this kind and girders. Fig. 6692 is sometimes used when the roof covering must be interrupted to admit of ventilation. In its construction it resembles even more than do the preceding forms an ordinary girder, and there is nothing special to remark in it. Fig. 6693, which from its shape may be called a sickle girder, has

lost almost all traces of a roof truss, and in detail is constructed very much like a bow-string girder with a top member to resist compression, and the bottom member a simple tie. The space between the two members is occupied by bracing, which is of a light nature, and may be of the character shown in Fig. 6693, if the ends are not hipped. In all trussed roofs the divisions of the rafter and the distance apart of the struts must be arranged to suit the kind of covering adopted.

Strains upon Trussed Roofs, Simplest Form.—The simplest case is that represented in Fig. 6694, and the strain upon the different members will be ascertained and tabulated. It is an ordinary king-roof principal, and answers well for small spans. In the figure the span is 20 ft., the rise 5 ft., and the total weight upon the whole principal is taken equal to 2 tons, so that 1 ton will be the load distributed over one-half of it. The same conditions will be assumed with respect to roofs as have been already laid down for bridges, and it will be always considered that the component parts of the structure are strained only in the direction of their length. The component parts of all the examples of roofs which will be investigated will be assumed to be unacted upon by any other strains except those already mentioned, and will virtually be secured against their influence, either by their short length, bracing, or form of section. Before proceeding to the graphical analysis of the strains upon the diagram, the first step is to ascertain the manner in which the load is distributed. With 1 ton upon the half truss there will be 0·25 ton supported directly at A, by the reaction of the supports, and will practically exert no effect upon any part of the principal; 0·25 ton at the apex C, which is resisted by the counteraction of 0·25 ton, due to the load upon the other half of the truss, making in all 0·5 ton at the point C, and 0·25 + 0·25 = 0·5 at the point D. As we are only considering half the principal, the load at the apex C will be taken equal to 0·25 ton, or one-half of that which is supported at that point by the joint action of the two rafters. The distribution therefore will be as follows;—A quarter of a ton at A and C, and half a ton at D. Sometimes the whole load on one rafter is considered to be equally divided among all the points of supports, in which case there would be one-third of a ton at A, D, and C. The former method is to be preferred as the more accurate, and it will always be adhered to in all similar instances. Moreover, in making the assumption that the weight is equally distributed, there is a larger portion borne directly by the support at A than upon the former supposition; and as this is considered to exert no strain upon the truss, it should evidently be kept as small as possible. Let us now examine in detail the action of the weight of the several points upon the rafter, and determine the strains they give rise to in the various parts of the demi-truss.

6694.

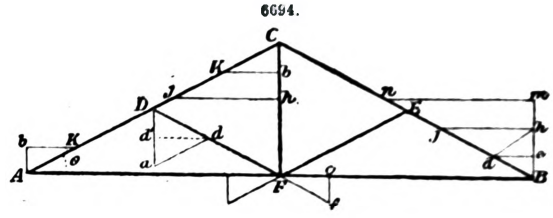

The weight at A is resisted directly by the vertical reaction of the wall, and consequently produces no strain upon any part of the principal, so that we may pass on to that at D.

This weight of 0·5 ton is in the first instance supported by the resistance of the lower part of the rafter A D, and that of the strut D F, causing strains of compression in both of them. Their amount may be readily determined. Make D *a* by scale equal to 0·5 ton; draw *a d* parallel to A D to meet the strut D F, and *a d* will equal the strain upon A D, and D *d* that upon D F. The strain A D upon the rafter is transferred to the point A, where it is resisted by the action of the tie-rod A F, and the vertical reaction of the support at A. Making A K equal to *a d*, and drawing K *b* parallel to the tie-rod—that is, horizontal, to meet the vertical line A *b*—the strain upon the tie-rod A F is equal to *b* K. These, however, are not the only strains brought upon the part A D of the rafter and the tie-rod A F by the action of the weight at D, as will be apparent on proceeding to examine into the effect of the strain D *d* upon the strut D F. The compressive strain D *d* is transferred to the point F, where it is resisted by the bars A F and F C. Plotting F *f* equal to D *d*, on the prolongation of the strut D F, and drawing *f c* parallel to F C, the strains upon A F and F C are represented by F *f* and F *c*. The strain upon A F may be disregarded, as it is counterbalanced by one of an opposite tendency and equal in amount from the weight at E, which also brings another equal strain upon the king-rod. The total strain upon the king-rod is equal to 2 × *f c*, but only half of this has to be regarded as affecting the other members of the half truss. Following the action of the strain *f c*, it is transferred to the point C, where it is represented by C *b*. If *b f* be drawn parallel to the tie-rod A F, then C K will represent the strain upon the part C D of the rafter. This strain is again transferred to the point of support A, thereby causing an additional strain upon the lower part of the rafter A D, and upon the tie-rod A F. So far, therefore, the total strain upon A D is equal to A K × C K = 2 A K, and that upon A F to 2 *b* K. In this instance the separate strains upon each member of the principal are equal, but this is partly due to the manner in which the load is distributed, the ratio between the span and rise of the roof, and the horizontality of the tie-rod, as will be more fully perceived in checking the strains by mathematical analysis. The whole action of the weight at D has now been accounted for, and it remains to examine into that of the apex C. This, by the distribution of the load, is equal to 0·25 ton, and, upon the scale of strains, equal to C *b*. Its action is therefore identical with that already considered, and it impresses upon the rafter an additional strain equal to C K upon C D and upon A D, and consequently an additional strain equal to *b* K upon the horizontal tie-rod. Instead of taking the last two strains separately, they might have been made equal to C *h*, and consequently *c j* and *h j* would have represented the result upon the two parts of the rafter and the tie-rod, being each of them respectively equal to 2 C K and 2 *b* K. A reference to the diagram will indicate that the strains may be arrived at in a somewhat different manner, by resolving the forces as shown at B. If these be compared, with those already determined, the identity will be established. The strains may now be tabulated as represented in Table II., and may be briefly

summed up as follows:—Strain upon A D = + 3 A K; upon D C = + 2 C K = C j; upon A F = − 3 b K; upon C F = − 2 $f c$; and upon D F = + D d.

There is clearly some analogy in the action of the strains upon a trussed roof and those upon a girder. In both instances they are augmentative, according to the number of separate parts or bars in the structure, but the direction in which the increase takes place is not the same. Thus in a horizontal girder the strain upon the flanges increases towards the centre, but in a roof they increase towards the abutments, the lower end of the rafter having to resist the maximum strain. A similar increase attends the strains upon the tie-rod, as will be pointed out when examples are treated of, in which the tie-rod consists of two or more separate bars. If the rafter C B be considered in the light of the last, or end bar, of a lattice of a Warren girder, the total strain upon the lower portion may be arrived at in exactly the same manner as in that case. The total reaction at B is equal to 1 ton, but of this one quarter is directly supported by the wall, so that the portion affecting the rafter is reduced to 0·75 ton. Making B m = 0·75 ton, and drawing $m n$ parallel to the tie-rod, we obtain B n, equal to the total strain upon E B, and $m n$ equal the total pull upon the tie-rod. It has been assumed in this investigation that there is no weight, such as a floor, for instance, placed upon the tie-rod, but if such should be the case, it should be distributed between the three points of support A, F, and B, and the weight added to the strain already obtained on F C. The result will be an increase on all the strains with the exception of that upon the struts D F and F E. In this particular description of iron structures there is very rarely any permanent load upon the tie-rod. During the erection of the roof, and at the subsequent periods of repair, the tie-rod is subjected to a small permanent load, consisting of the necessary scaffolding and workmen, but this is not of sufficient importance to be taken into the calculation, as the margin allowed for safety will more than cover it.

Where there are so few parts, as in the first example we have selected in the diagram, all the strains may be readily calculated by a few simple equations, directly the theory of their action is understood, that is, provided their effect upon the various members of the truss can be traced from their origin to their final resistance at the points of support. Let W represent the total weight upon one half of the truss, then there will be a weight of $\frac{W}{2}$, situated at the point D, and of $\frac{W}{4}$ at A and C. The strain upon the end of the rafter, resulting from the weight $\frac{W}{2}$, is equal to $a d$, and by construction $a d = d$D. Drawing $d d'$ parallel to the tie-rod, $d d'$ = d' D = $\frac{W}{4}$ and angle $a d d' = \theta$. Putting $a d$ = S = strain on A D, we have $S = \frac{W}{4 \text{ sine } \theta} = \frac{W}{4}$ cosec. θ. To find the value of θ, we put tang. $\theta = \frac{C F}{A F} = \frac{5}{10} = 0{\cdot}5000$ and θ = practically 26° 34′. Tracing the action of the weight $\frac{W}{4}$, which is the vertical component of that already determined, it will be seen that it is transferred to the apex C, and again resolved into a thrust upon the rafter.

Summing up, therefore, we have the total strain upon the lower part of the rafter equal to these three, and therefore $S = \left\{\frac{W}{4} + \frac{W}{4} + \frac{W}{4}\right\} \times \text{cosec. } \theta = \frac{3\ W \times \text{cosec. } \theta}{4} = 0{\cdot}75 \times \text{cosec. } \theta$. But cosec. $\theta = \frac{1}{\text{sine } \theta'}$, then S = 0·75 × 2·234 = 1·67 ton, which agrees with the result given in Table II. The total tensile strain or pull upon the tie is the strain which resists this thrust on the rafter, and is consequently its horizontal component, and is represented by $m n$ in the diagram. By construction, the angle $m n$B equals the angle θ, and putting S^1 for the pull on the tie we obtain S^1 = S × cosine θ. From above S = 0·75 × cosec. θ; therefore

$$S^1 = 0{\cdot}75 \times \text{cosec. } \theta \times \text{cosine } \theta = 0{\cdot}75 \times \text{cotang. } \theta = 0{\cdot}75 \times 2 = 1{\cdot}50 \text{ ton.}$$

Obviously the thrust upon C D equals that upon A D, minus $a d$, therefore equals

$$S - (0{\cdot}25 \times \text{cosec. } \theta).$$

The strain upon the strut D F = $a d$, and needs no further elucidation. It only remains therefore to calculate that upon the king-rod. This is equal to 2 $f c$. Let it be put equal to S^2, and we shall have the equation $S^2 = 2$ F $f = 2$ D $d = 2\ a d \times$ sine θ. But $a d = 0{\cdot}25 \times$ cosec. θ, therefore $S^2 = 2 \times 0{\cdot}25 \times$ cosec. $\theta \times$ sine $\theta = 2 \times 0{\cdot}25$ ton. This completes the calculation of the strains upon the half truss. It must not be forgotten that a horizontal thrust is generated at the apex C, which is resisted by one similar in amount and direction, due to the action of the load upon the remaining half of the principal. This would be rendered apparent if the other half of the truss were replaced by a wall. As some of our readers may not be acquainted with trigonometrical calculations, the following equations will enable them to check some of these strains they have determined by the aid of the diagram by simple arithmetical means. The rule for the total strain upon the end of the rafter may be thus expressed; the total strain upon the end of the rafter is equal to the total weight supported by it, multiplied by the length of the rafter, and divided by the rise of the roof. The rise of the roof is the distance from the middle part of the tie to the apex or junction of the rafters. If P be the length of the rafter, L the half span, and R the rise, then $P^2 = L^2 + R^2$ and $P = \sqrt{L^2 + R^2} = \sqrt{100 + 25} = 11{\cdot}18$.

Substituting these values in the rule, the strain upon the end of the rafter equals

$$\frac{0{\cdot}75 \times 11{\cdot}18}{5} = 1{\cdot}67 \text{ ton,}$$

as before. Since the total strain upon the tie-rod is the horizontal component of this, the rule for it is, the total strain upon the tie-rod is equal to the total weight upon the rafter multiplied by the half length of the tie, and divided by the rise. Consequently in the present case it is equal to $\frac{0{\cdot}75 \times 10}{5} = 1{\cdot}50$ ton, as in Table II. Similarly to a girder, the strains upon a roof principal are increased in the ratio of the span, and diminished in the inverse ratio of the rise, which is virtually the depth, and exercises the same influence over both examples of construction.

TABLE II.

Weight at	Parts of the Half Truss.				
	A D.	D C.	A F.	C F.	D F.
A	+0·55	+0·55	−0·50	−0·25	+0·55
D	+0·55	..	−0·50	..	..
C	+0·55	+0·55	−0·50	..	..
E	..	..	..	−0·25	..
Total	+1·65	+1·10	−1·50	−0·50	+0·55

Single Roof Truss with Diagonal Bracing.—It has been already mentioned that the tie-rod of a roof truss is usually placed in an inclined position. Before proceeding to analyze an example of that description, we will investigate the one illustrated in Fig. 6695, in which the span, rise, and rate of loading are identical with those adopted in the example on p. 2811. The difference consists in the manner in which the bracing is arranged, and the two examples should be carefully studied and compared together, so that an accurate estimate may be formed of their relative advantages. In the diagram, Fig. 6695, the struts approach nearer to a perpendicular position with respect to the rafter, while the tie or queen-rods are no longer vertical, but inclined at different angles to the horizontal. This description of bracing, allowing for the varying angles of inclination, is similar to that of a Warren truss or girder, and it is preferable to the older form represented in Fig. 6689. The majority of the struts in the latter instance are shorter than the corresponding ones in the former figure, and are consequently not strained to quite the same amount. This difference would be shown more conclusively if, instead of the unit weight selected for the purpose, the actual weight likely to be placed upon a roof of the given dimensions had been adopted. The former, however, possesses the advantage of acting as a standard for all similarly trussed roofs of the same span and rise, since, to find the actual strains upon the various parts, it is sufficient to multiply the strains given in Tables I. and II. by the proper constant, or the number representing the ratio between the unit adopted and the load in question. In the present example the strains are divided into two classes, under the heads of direct and transmitted strains. So that it will be perceived how the action of the same weight is multiplied, again and again, by the different parts of the bracing. It is of very little use to be acquainted with the total strain on any particular bar, unless the designer of a structure is capable of analyzing that strain, dividing, and, as it were, dissecting it into every one of its component parts. Mathematical formulæ, wherever they are applicable, suffice for calculating the total amount of any strain, but they do not afford the slightest clue to the manner in which it has been gradually and successively accumulated. They give, it is true, the result of a load, but impart no information respecting its intermediate action. As an instance, take the formula for the strain upon the last bar of a Warren girder, where S equals the strain, W the total load, and θ the angle of inclination of the bars to the horizon. The calculation is at once made by the equation $S = \frac{W \times \text{cosec. } \theta}{2}$; but the equation affords not the slightest information respecting the manner in which the successive strains are obtained, until they reach the total represented by S.

6695.

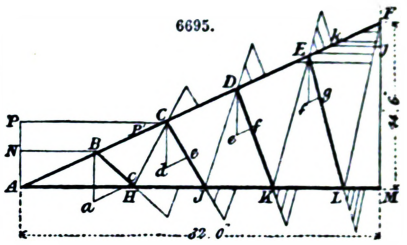

The direct strains result from the action of those portions of the total load situated at the points B, C, D, E, and F, and affect the several bars of the rafter and the inclined struts attached to them. It will not be necessary to do more than to indicate briefly the effect of the strains, represented by the lines of the diagram, as the principles of the analysis and the geometrical reasoning have already been enunciated. Moreover, Table III. has been constructed to show at a glance the direct strains resulting from the weights placed at the different apices of the triangles. The distribution of the load will be the same as before; therefore, making the vertical lines B a, C d, D e, E f, respectively equal to 0·2 ton, the direct strains upon the rafter and struts are given by the other sides of the triangles, and will be found to agree with those in Table III.

At the apex F the weight is only half that situated at the lower apices; so that F j = 0·1, and F k equals the strain upon the part of the rafter E F, and is also added to those already obtained for the other parts. It might, perhaps, be considered that the addition of the strain upon B C, or upon any other bar of the rafter to that upon A B, should be regarded as a transmitted strain, and not a direct one. So it would, were the direction of the strain altered, but it is not. Both the direction and nature of the strain remain constant, and, moreover, A B, B C, and, in fact, all the separate

bars of the rafter A F, are in reality but one bar, although theoretically subdivided. This is clearly not the case with the strain induced upon the bar H C by the action of the weight at B. The compressive strain in the strut B H is changed both in direction and character when transmitted to the bar H C or A H; but the strain upon the bar B C from the weight at C undergoes no change of any kind in amount, character, or direction in passing to the bar A B. It is a simple addition, and so for the other strains transferred from C D, D E, and E F.

TABLE III.

Parts of the Half Truss.	Direct Weights at B.	C.	D.	E.	F.	Total Strains.	
A B	+0·165	+0·0975	+0·0675	+0·055	+0·245	+0·630	
B C	..	+0·0975	+0·0675	+0·055	+0·245	+0·465	
C D	..	..	+0·0675	+0·055	+0·245	+0·367	Rafter.
D E	..	..	..	+0·055	+0·245	+0·300	
E F	..	..	..	..	+0·245	+0·245	
B H	+0·200	..	..	..	..	+0.200	
C J	..	+0·185	..	..	..	+0·185	
D K	..	..	+0·182	..	..	+0·182	Struts.
E L	..	..	..	+0·185	..	+0·185	

There is no readier method of ascertaining the strains in Table III., than that demonstrated in the diagram. In consequence of the inclination of the bars and their deviation from the vertical, the trigonometrical calculation of the thrusts, or compressive strains upon the different parts of the rafter and struts, is not capable of being so easily effected as in the former instance, where the queen-rods were perpendicular, nor is there any advantage to be gained in resorting to that method. The manner in which the half truss is affected by the transmitted strains is represented in Table IV. By the aid of the diagram there will be no difficulty in following the analysis, and there is no point calling for especial notice, with perhaps the exception of the strain upon the centre bar L M of the horizontal tie-rod. This is found equal to − 1·069. It is evident, on inspection, that the bar L M is not in any way affected by the strains upon the intermediate struts and ties, forming the component parts of the truss. The strain upon it is exactly the same as if they were all removed, and the truss consisted simply of a rafter A F and the half tie-rod A M. The total load will then be supported at the two points A and F, half at each point. Make A N equal to this load equal to 0·5 ton, and draw N B parallel to A M. The line N B will scale 1·069, and will represent the strain upon the bar A M, or L M. Whatever form of truss may be adopted, or whatever may be the number of the secondary or subsidiary trusses, the strain upon the centre bar of a horizontal tie-rod will be that due solely to the loading upon the primary truss, and will be altogether unaffected by the introduction of smaller secondary trusses and bracing. This will be better seen in the example of a roof with an inclined tie, as will also several other conditions of strain, which are not so apparent in the simple instance in Fig. 6695. The direct and transmitted strains may now be summed up, and tabulated as shown in Table V.

The sum of the two descriptions of strains represents the total strains resulting from the whole weight of the truss. The strains upon the ends of the rafter and the tie-rods, that is, upon the bars A B and A H, may be checked by plotting the total reaction of the load at the abutment and completing the triangle of forces.

Make A P equal the reaction, draw P P^1 parallel to the horizontal tie, and A P^1 and P P^1 will give the measure of the strains upon A B and A H to the same scale. Or the same results may be obtained by the formula already given, which, however, it must be remembered, only applies to those examples in which the tie-rod is uniformly horizontal. Let S and S^1 equal respectively the strains upon the ends of the rafter and tie-rod, or upon the bars A B and A H. Putting θ for the angle of inclination F A M, and W for the total weight upon the half roof, then $S = W \times \text{cosec. } \theta$ and $S^1 = W \times \text{cot. } \theta$ and S = 2·124, and S^1 = 1·929, which agree with the strains found by summation in Table V. Similarly the strain upon the bar L M of the tie-rod may be found by calculation.

The natural cotangent of 25 degrees being 2·144, the strain required equals 2·144 × 0·5 = 1·07 ton. The member which has the greatest influence upon the strains upon a roof is the tie-rod. Directly this becomes inclined from the horizontal, it modifies the amount of the strains in all the component parts of the truss, and it is no longer possible to check the sums of the strains upon the ends of the rafter and the tie-rod by the same simple methods already adopted. This follows from the fact, that if the portion of the tie-rod situated next to the rafter be inclined upwards from the horizontal, while the central portion remains horizontal, there are no longer three forces making equilibrium at the abutment, but four.

One operation is therefore not sufficient to resolve the strains upon all the bars affected by the vertical reaction at that point. It must not be assumed that the process of analysis which answers for a simple example, is also applicable to others of a more complicated and scientific form.

In the practical designing of roofs, if they be thoroughly well secured by wind-ties and bracing from the sudden action of violent strains, the material may be taxed a little more than in the case of a bridge. So far as the parts in tension are concerned, it might be safe to increase the stereotyped 5 tons to 6 tons an inch of sectional area, but it would scarcely be prudent to adopt the same course with the parts in compression. The struts constitute the weak part of a roof truss, and there is, moreover, this important difference between it and a lattice bridge—the failure of one

bar in the former would be certain to seriously jeopardize, and probably destroy, the security of the others. This contingency is a well-known and a well-founded objection against the employment of the Warren girder for any except limited spans, whereas the fracture of one of the bars in the web of a lattice girder would affect that bar only.

TABLE IV.

Weights at	AB.	BC.	CD.	DE.	EF.	AH.	HJ.	JK.	KL.
	PARTS OF THE HALF TRUSS.								
B	+0·120	+0·120	+0·050	+0·032	+0·095	−0·210	−0·067	−0·030	−0·020
	+0·050	+0·050	+0·032	+0·095	..	−0·067	−0·030	−0·020	−0·073
	+0·032	+0·032	+0·095	..	..	−0·030	−0·020	−0·073	
	+0·095	+0·095	..	..	..	−0·020	−0·073		
	..	..	..	..	..	−0·073			
C	+0·115	+0·115	+0·115	+0·060	+0·200	−0·143	−0·143	−0·070	−0·037
	+0·060	+0·060	+0·060	+0·200	..	−0·070	−0·070	−0·037	−0·160
	+0·200	+0·200	+0·200	..	..	−0·037	−0·037	−0·160	
	..	..	..	..	..	−0·160	−0·160		
D	+0·087	+0·087	+0·087	+0·087	+0·305	−0·120	−0·120	−0·120	−0·073
	+0·305	+0·305	+0·305	+0·305	..	−0·075	−0·073	−0·073	−0·273
	..	..	..	..	..	−0·275	−0·273	−0·273	
E	+0·425	+0·425	+0·425	+0·425	+0·425	−0·090	−0·090	−0·090	−0·090
	..	..	..	..	..	−0·340	−0·340	−0·340	−0·340
F	..	..	..	..	..	−0·223	−0·223	−0·223	−0·223
Total ..	+1·499	+1·499	+1·379	+1·329	+1·297	−1·929	−1·719	−1·509	−1·289

Weights at	LM.	BH.	CJ.	DK.	EL.	HC.	JD.	KE.	LF.
B	−0·073	..	+0·087	+0·050	+0·048	−0·150	−0·070	−0·048	−0·037
C	−0·160	..	..	+0·120	+0·075	..	−0·170	−0·100	−0·075
D	−0·273	..	..	..	+0·148	..	..	−0·180	−0·147
E	−0·340	..	..	..	..	..	..	..	−0·187
F	−0·223								
Total ..	−1·069	..	+0·087	+0·170	+0·271	−0·150	−0·240	−0·338	−0·446

TABLE V.

Parts of the Half Truss.	Direct Strains.	Transmitted Strains.	Total Strains.	
AB	+0·630	+1·499	+2·129	
BC	+0·465	+1·499	+1·964	
CD	+0·367	+1·379	+1·746	Rafters.
DE	+0·300	+1·329	+1·629	
EF	+0·245	+1·297	+1·542	
AH	..	−1·929	−1·929	
HJ	..	−1·719	−1·719	
JK	..	−1·509	−1·509	Tie-rod.
KL	..	−1·289	−1·289	
LM	..	−1·069	−1·069	
BH	+0·200	..	+0·200	
CJ	+0·185	+0·087	+0·272	
DK	+0·182	+0·170	+0·352	Struts.
EL	+0·185	+0·271	+0·456	
HC	..	−0·150	−0·150	
JD	..	−0·240	−0·240	Ties or
KE	..	−0·338	−0·338	queen-rods.
LF	..	−0·446	−0·446	

Double Truss, with Inclined Tie-rods.—The tie-rod of a roof has hitherto been regarded as occupying a horizontal position, from the extremity of one rafter to that of the other, and a truss of this description answers well enough for spans of limited dimensions, and also in instances where the engineer is not troubled about the question of headway. Frequently this is the very question he has to deal with. To increase the headway, the obvious plan is to raise the tie-rod. But since the strength of any single truss or girder is directly as the depth, the raising of the tie-rod diminishes the depth, and therefore the strength of the truss; or, what amounts to the same, the strain upon the various members of the roof is increased. But this is of comparatively little consequence with other and more important considerations. There are certain given conditions which must be

fulfilled, no matter what the strain may be, and the engineer has only to make the best of them under the circumstances. Supposing therefore that it is necessary to employ a description of truss, with the tie-rod raised above the level of the extremities of the rafters, there are some points of difference existing between the two types which demand notice. A more correct distinction might be made, by calling one the single, and the other the double truss system, as a reference to Fig. 6696 will indicate. The whole roof represented in the diagram consists of two separate trusses A D C, B D C, which are united at the apex C, and held together by the horizontal tie-rod D D. In the diagram, the parts in compression are shown by the thick, and those in tension by the thin lines. The only point of identity that exists between the double and the single trussed roof, is in the king-rod C E, which has no strain whatever on it provided two conditions are fulfilled. These are that the portion of the tie-rod which is connected with it should be horizontal, and not sufficiently long to be liable to sag from its own weight. It might be imagined that, as the horizontal tie-rod D D prevents the feet of the separate rafters from being thrust outwards, it virtually has a strain upon it equal to the horizontal thrust; but such is not the case, and the error must be carefully guarded against. If the tie-rod D D were directly attached to the extremities of each individual rafter, it would then be in the position of that belonging to the single truss system, and the pull upon the portion of it next to the rafter would equal the horizontal thrust of the roof. But in the present instance the pull upon it, due to the thrust of the rafter, can only be transferred to it through the medium of the inclined tie A D, which consequently alters both the direction and amount of the original strain. The strains upon the trusses themselves are dependent both upon the pitch of the rafter and the angles F A D, F B D, of the inclined tie-rods, supposing span and load to be the same. Both these are also dependent upon the absolute pitch of the roof, that is, the angle C A B. There is a particular value for this angle, which causes the strain upon the bar A D to be exactly double that on D C. The advantage of this in practice is obvious, as it simplifies the number of independent parts; since, whatever may be the scantling of D C, it is only necessary to use two bars instead of one to obtain the requisite quantity of material in A D.

6696.

The reduction of the component parts of a structure to as few dissimilar pieces as possible, is a consideration the importance of which cannot be over-estimated.

Before proceeding to analyze by diagram the nature and amount of the strains upon the double-trussed roof represented in Fig. 6696, a few of them may be ascertained by calculation, and will thus serve as a check upon the other method.

Put S for the span, R for the rise or depth of truss from C to E, L for the length of the rafters, W for the total load in tons upon the whole principal, and θ for the angle of the pitch of the roof.

The distribution of the load on the half truss in reference to Fig. 6696 will be $\frac{W}{4}$, at the point F, and $\frac{W}{8}$ at A and C. The total weight at the apex C will be $\frac{W}{4}$, but $\frac{W}{8}$ is all that concerns the strains upon one half of the truss. To find the strain first on the strut F D, put S for the strain, and it becomes $S = \frac{W}{4} \times \cos.\ \theta$. If we take W = 2 tons, which makes the load on the half truss equal to unity, and θ = 26 deg., we have S = 0·449 ton. To determine the strains upon the different parts of the rafter, make the angle F A D = θ'; both these angles θ and θ' can be readily calculated, as the one is a function of the rise and span of the roof, and the other of the length of the rafter and the length of the strut F D, which is known by construction.

Altogether there are three strains brought upon the rafter A C, which affect the portion A F, and two which affect F C. Calling these S_1, S_2, and S_3 respectively, we have their respective values.

$$S_1 = \frac{W}{4} \times \text{tang. } \theta;\ S_2 = \frac{W}{4} \times \cos.\ \theta \times \text{cot. } \theta';\ \text{and } S_3 = \frac{W}{8} \times \frac{\text{sine } 90 + (\theta - \theta')}{\text{sine } \theta'}.$$

The part of the rafter F C is obviously not directly affected by the weight at F, which produces the strain S_1; therefore the strain upon F C will be equal to

$$(S_2 + S_3) = \frac{W}{4} \times \cos.\ \theta \times \text{cot. } \theta' + \frac{W}{8} \times \frac{\text{sine } \{ 90 + (\theta - \theta') \}}{\text{sine } \theta'},$$

and that upon

$$A\,F = (S_1 + S_2 + S_3) = \frac{W}{4} (\text{tang. } \theta + \cos.\ \theta \times \text{cot. } \theta') + \frac{W}{8} \times \frac{\text{sine } \{ 90 + (\theta - \theta') \}}{\text{sine } \theta'}.$$

The formula may be put in another form, for let $(S_1 + S_2 + S_3) = M$, then

$$M = \frac{W}{8 \text{ sine } \theta'} \times \{ (2 \text{ sine } \theta' \text{ tang. } \theta + \cos.\ \theta \text{ cot. } \theta') + \text{sine } \{ 90 + (\theta - \theta') \}.$$

Substituting in this equation the correct values for the quantities we obtain

$$M = \frac{1}{4 \times 0{\cdot}258} \times \{ (0{\cdot}516\ (0{\cdot}487 + 3{\cdot}349) + 0{\cdot}981) \} = 2{\cdot}86 \text{ tons.}$$

The strain upon F C can be obtained either from the formula given above, or more simply by subtracting from the last. Calling it N, we have $N = (M - S^1) = (2{\cdot}86 - 0{\cdot}243) = 2{\cdot}617$ tons. A comparison should be made between these results and those obtained for the strains upon the rafter, when the tie-rod is horizontal, in order to trace the manner in which the inclination of the ties affects them. The angle θ' becomes an element in the calculation, and assists in complicating it. We may

now ascertain the strains upon the inclined tie-rods, A D and D C. There will be only one upon D C, due to the direct action of the weight at F which will produce equal strains upon A D and D C. These may each be calculated from the formula $S_4 = \frac{S \times \cos.\,\theta'}{\text{sine } 2\,\theta'} = \frac{S}{2 \text{ sine } \theta'} = 0{\cdot}87$ ton. As this strain is transferred to the apex C, it is multiplied again on the rafter and the tie A D, which also receives an additional strain from the weight directly superimposed at C. Therefore the total strain upon A D is equal to $2S_4 + S_5$, but S_5 is equal to $\frac{W}{8} \times \frac{\cos.\,\theta}{\text{sine } \theta'}$, and may be easily shown to be equal to S_4. For $S_4 = \frac{S \times \cos.\,\theta'}{\text{sine } 2\,\theta'} = \frac{W}{4} \times \cos.\,\theta \times \frac{\cos.\,\theta'}{\text{sine } 2\,\theta'}$. Substituting for the expression sine $2\,\theta'$ its equivalent 2 sine θ' cos. θ', the identity between the two equations is established, and the total strain upon A D becomes equal to 2·61 tons. But there is another strain upon D C due to a part of the strain upon A D. Let the portion of the strain upon A D equal S_6, that affects D C and D E. Then the additional strain upon D C will be given by the formula

$$S_7 = S_6 \times \frac{\text{sine } (\theta - \theta')}{\text{sine } (\theta + \theta')}.$$

Thus making the total strain upon the tie D C equal to 1·37 ton. It only remains now to find the strain upon D E, which is found from the equation

$$S_8 = \frac{S_7 \times \text{sine } 2\,\theta'}{\text{sine } (\theta - \theta')} \text{ or } S_8 = \frac{0{\cdot}50 \times \text{sine } 30^\circ}{\text{sine } 11^\circ} = 1{\cdot}31 \text{ ton.}$$

These calculations will be found to check sufficiently closely with those arrived at by the other methods, represented in Fig. 6697, to prove the accuracy of the results for all practical purposes. The strain upon D E is the same as that of the horizontal thrust, modified by the action of the tie-rod A D, for D E might be replaced by an abutment or buttress at the points A and B, without altering the conditions of equilibrium existing in the roof.

TABLE VI.

Parts of Truss.	Weight at A.	Weight at F.	Weight at C.	Total Strains.	Remarks.
A F	0	{+0·225 / +1·700}	+0·950	+2·875	Rafter.
F C	0	+1·700	+0·950	+2·650	Rafter.
F D	0	+0·450	..	+0·450	Strut.
A D	0	−1·750	−0·875	−2·625	Ties.
D C	0	−0·875	−0·500	−1·375	Ties.
D E	0	−0·670	−0·670	−1·340	Tie-rod.

The diagram in Fig. 6697 shows the lines necessary to obtain the strains upon the different parts of the truss, and in Table VI. results are given so that they may be compared with those already obtained by calculation. In the diagram there are two methods demonstrated, one showing the actual transference of the separate strains, and the other total strains upon the different members of the truss. According to the distribution of load which is adopted, the total load upon the half principal being 1 ton, the load upon point F is 0·5 ton, and at A and C 0·25 ton respectively. The lines which indicate corresponding strains, are distinguished in the two methods as far as possible by the same letters, with the addition of dotting those belonging to the outside diagram of strains. Any line parallel to any given bar is a measure of the strain, or a part of the strain, upon it. The difference between the two methods is that the one, or successive method, gives the separate strains brought by each weight upon the different parts of the truss, while the other method does not. Take, for instance, the strain upon the two parts of the rafter A F, F C. By the former method the strain upon A F is ascertained by measuring the lines $a\,b$, f C, and h C, and that upon F C by f C and h C. By the latter the strain upon A F is equal to A C + A F, but the strain upon F C is equal to A C + b' F, the exact reason for which does not appear, as the manner in which the strains act is not investigated throughout. It is not the result alone that must be considered, but the means by which that result is obtained.

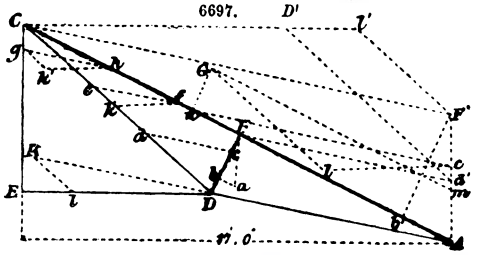

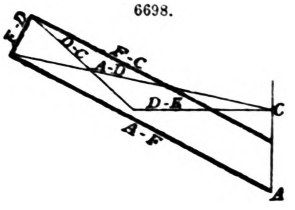

It is the preliminary steps which are the most important, and the very points which require accurate elucidation. In Fig. 6698 the same truss is shown with the strains indicated by the lines

bearing the same letters as in Fig. 6697, and the diagram is drawn in accordance with the method known as the polygon of forces. While the results are perfectly accurate, the method fails, like the other, to trace the action of the strains, and can therefore supply no information, except to those who have already mastered the whole subject. A comparison of these two diagrams will point out that they agree not only in the total, but in the separate strains, much more closely than might be imagined. For example, the total strain upon the tie-rod A D is equal in Fig. 6697 to $cd + fc + hg = 3cd$.

On referring to Fig. 6698 it will be seen that these separate strains are correspondingly represented by the three subdivisions of the line A D.

Similarly for the strains upon D C, which are equal in Fig. 6697 to D d + K l, and in Fig. 6698 the subdivisions of the line D C. An examination of the method of the polygon of forces will demonstrate that it is in every way superior to the reaction method, as may be termed that shown by the dotted lines outside the truss in Fig. 6697. It is infinitely more elegant, and marks the subdivisions of the strains better. It is, like the other methods, always used in combination with the elevation of the truss, from which the direction of the different bars has to be obtained. Table VI. shows the total and separate strains upon the various parts of the truss. The line A C in Fig. 6698 represents the total reaction at the abutment, and the polygon of forces can thus be readily applied to the actual diagram of the roof. Make A c, in Fig. 6697, equal 0·75 ton, equal the reaction at A; draw $c\,n$ parallel to A D to meet the rafter; from the point m, in the line A c, in which cm = the weight supported at A = 0·25 ton; draw m G parallel to the rafter to meet n G, drawn parallel to the strut, and complete the diagram.

The junction of the various lines in this diagram will point out the manner in which each bar affects the other, although the relation is not so plainly exhibited as by working out the successive strains upon the actual truss itself. If the method of ascertaining the strains be worked out by two different diagrams, it will obviate the necessity for checking their accuracy by trigonometrical calculations, although it will be more satisfactory to check the totals by an altogether independent process, than to employ two, which, although varying in detail, depend upon one and the same principle.

Double Truss, with Two Struts.—When the span of a roof exceeds the limit of about 35 or 40 ft., the simple design already illustrated requires to be somewhat modified. It has been before remarked that the introduction of struts in a braced truss or framework is for the purpose of nullifying the transverse strain, that would otherwise be induced upon the members of the truss. Referring to Fig. 6699, it is clear that when the length of the rafter reaches a certain limit, one strut in the centre, as was shown in Fig. 6697, would not be sufficient to prevent the two halves of the rafter into which it divided it from being affected by transverse strain. Consequently it becomes necessary to use a couple of struts, and divide the whole rafter into three parts. An excellent roof of the form shown in Fig. 6699 may be constructed for spans not exceeding 60 ft. When the dimensions are greater, a different and more complicated description of truss must be used, and for very large spans, the circular or segmental form is the best adapted. In tracing the action of the strains in the diagram in Fig. 6699, the process will be very analogous to that already described for the example in Fig. 6697, making due allowance for the action of the two struts instead of a single one. The distribution of the load will vary, in every instance, according to the number of points at which the rafter is supported, that is, in proportion to the number of struts introduced into the system of trussing.

6699.

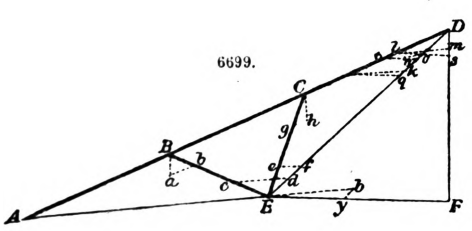

6700.

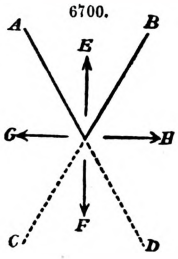

6701.

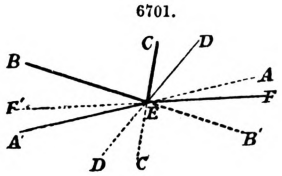

Distinction between Struts and Ties.—In order to determine which bars are struts and which are ties in any form of truss, when the strain acts upon them in a given direction, let A and B, in Fig. 6700, be two bars meeting at an apex. If the strain act in the direction of the arrow E, they will both be struts, and if in that of arrow F, they will both be ties. Should the force be in the direction of the arrow G, the bar A will be a strut, and B a tie, but if in the direction of H, the bar A will be a tie, and B a strut. The rule may be laid down in words as follows:—If the force or strain acts in any direction within the angle formed by the two bars, they are both struts; but if it acts in the direction of, and within, the angle formed by their prolongation, they are both ties. Again, if the strain acts within the angle formed by the original direction of one of the bars, and of the prolongation of the other, then the bar whose prolongation forms one of the sides of the angle is a tie, and the other a strut. To apply this to the truss in the diagram, let the bars in Fig. 6701 be represented by the same letters as in Fig. 6699, and their prolongations indicated by the dotted lines and corresponding dotted letters. First, let us ascertain how the bars A E and D E are affected by the strain upon the strut B E. Produce B E to B'. The line E B' represents the direction of the force which lies within the angle A' E D', that is, the angle formed by the prolongation of the bars A E and D E. Both these bars are therefore ties. If we now take the bars D E and E F, the direction of the strain lies within the angle F' E D', that is, within the angle formed by the direction of one of the bars, and the prolongation of the other, so that

D E is in tension and E F in compression. But as E F is not intended to act as a strut, it undergoes no strain from the direct weight at B, as Table VI. will show.

6702.

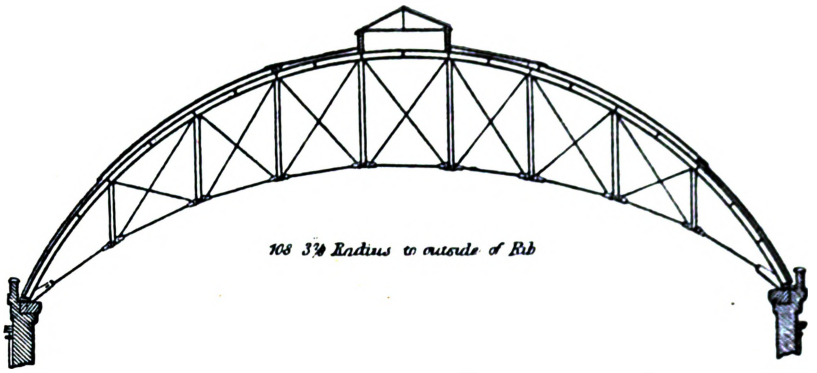

6706. 6707. 6703. 6704.

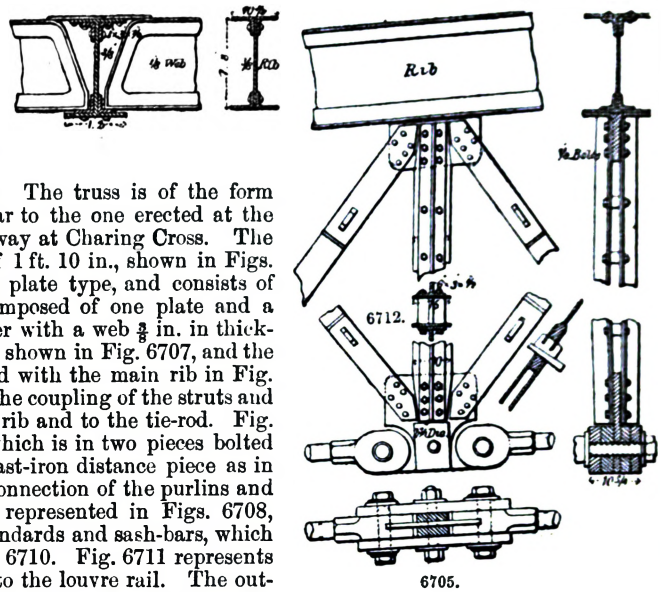

Examples of Roof Trusses.— In Figs. 6702 to 6711 are represented the elevation and details of the City Terminus roof of the South-Eastern Railway, at Cannon Street, London. The span in the clear is 187 ft., the depth of the truss at the centre is about one-sixth of the span. The truss is of the form shown in Fig. 6693, very similar to the one erected at the other terminus of the same railway at Charing Cross. The rib, which has a total depth of 1 ft. 10 in., shown in Figs. 6703, 6704, and 6706, is of the plate type, and consists of an upper and lower flange, composed of one plate and a pair of angle irons each, together with a web $\frac{3}{8}$ in. in thickness. A section of the purlin is shown in Fig. 6707, and the manner in which it is connected with the main rib in Fig. 6706. Figs. 6703 to 6705 show the coupling of the struts and ties forming the bracing to the rib and to the tie-rod. Fig. 6712 is a section of the strut, which is in two pieces bolted together, but kept apart by a cast-iron distance piece as in Fig. 6704. The details of the connection of the purlins and of the slating and glazing are represented in Figs. 6708, 6709. The top of the louvre standards and sash-bars, which are of T iron, are shown in Fig. 6710. Fig. 6711 represents the purlin and its attachment to the louvre rail. The outside radius of the main rib is 108 ft. $3\frac{7}{8}$ in. Figs. 6713 to 6728

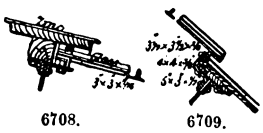

6708. 6709.

6710.

6711.

6713.

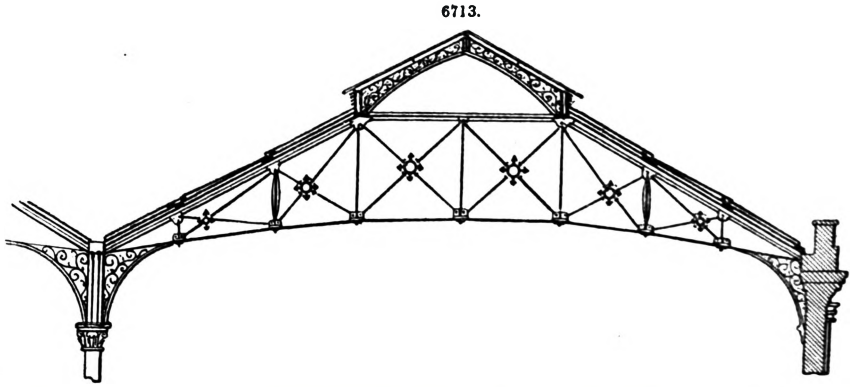

show another example of a truss well adapted for railway station roofs, which is erected over the Broad Street station of the North London Railway. The section of the rib, Fig. 6714, is rather peculiar.

It consists of four angle irons with a web-plate, the lower part of which projects below the lower angle irons. Figs. 6714 to 6717 are the details of the cast-iron shoe, and the method of connecting the

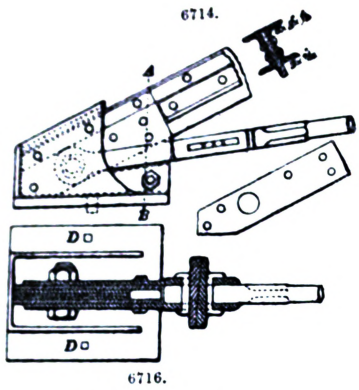

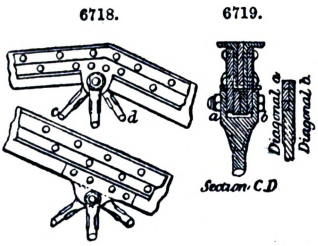

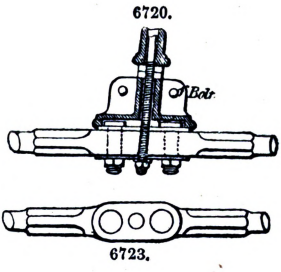

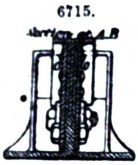

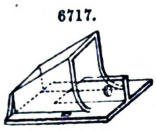

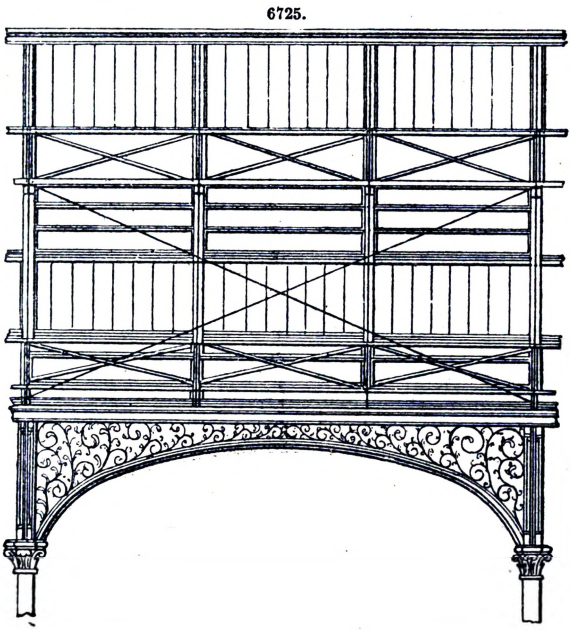

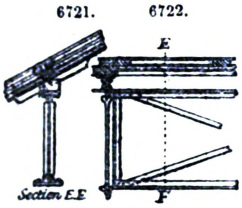

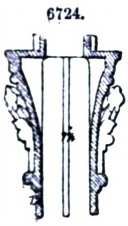

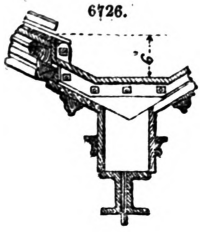

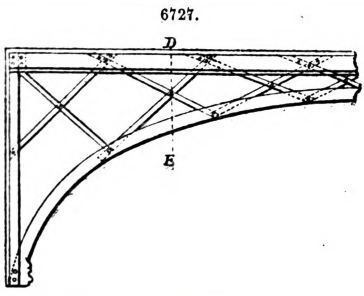

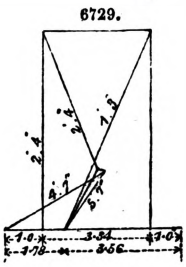

foot of the principal and the tie-rod. Wrought-iron cheeks are bolted on to the ends of the principal rafters, Fig. 6716, in which figure D D are wrought-iron dowels. The junction of the rods with the principal is made as in Figs. 6718 to 6720. A longitudinal elevation of one bay of the roof is given in Fig. 6725, and Figs. 6721, 6722, show the elevation and section of the wrought-iron lattice girder used as the purlins. Fig. 6726 gives the details of the gutter; Figs. 6727, 6728, those

of the curved lattice girder, shown in Fig. 6725. The roof is carried on cast-iron columns, Fig. 6724, and has a very light and elegant appearance.

Wind Pressure.—One diagram will suffice to show the general method of ascertaining the pressure of the wind, and the example selected is a truss of the form in Fig. 6697.

With a nominal pressure on one rafter of 20 lbs. a square foot, the total load will be 5·3 tons, or 2·65 tons on each bay, giving for the loads at the joints of the rafter, considered as continuous, at 1, 1·0 ton; at 2, 3·3 tons; at 4, 1·0 ton. Resolving these parallel forces at 1 and 7, the reaction at 1 is 3·6 tons, and at 7 is 1·7 ton. In Fig. 6729 these quantities have been set off on the line of loads, and the diagram of stress has been drawn.

Books on the subject;—Rondelet (J.), 'L'Art de Batir,' 6 vols. 4to, Paris, 1805–51. Fairbairn (Sir W.), 'Useful Information for Engineers,' Third Series, crown 8vo, 1866. Unwin (W. C.), 'Iron Bridges and Roofs,' 8vo, 1869. Tredgold's 'Carpentry,' by Hurst, crown 8vo, 1871. De Volson Wood 'On the Resistance of Materials,' New York, 1871. Stoney (B. B.), 'The Theory of Strains,' royal 8vo, 1873. Matheson (E.), 'Works in Iron: Bridge and Roof Structures,' royal 8vo, 1873. Cargill (T.), 'Strains upon Bridge Girders and Roof Trusses,' 8vo, 1873. Bow (R. H.), 'Economics of Construction in Relation to Framed Structures,' 8vo, 1873. See also various papers in the 'Minutes of the Proceedings of the Institution of Civil Engineers,' and the 'Transactions of the Society of Engineers.'

ROPE-MAKING MACHINE. GER., *Maschine zur Verfertigung der Seile;* ITAL., *Macchina da corde;* SPAN., *Maquinaria para hacer cuerdas.*

Ropes are mainly constructed either of the fibres of the hemp plant, or of iron wire. Other vegetable substances and other metal wires are also used; but in the present article only the two important manufactures of hemp rope and iron-wire rope are referred to; and as the treatment of the hemp fibres and the manufacture of them into rope is quite different from the formation of iron-wire rope, the subject naturally divides itself into two branches.

Hemp Rope.—Of the other substances besides hemp which have been found useful and profitable for rope making, the most important are—manilla, the fibres of which are obtained from the bark of a wild species of banana grown in the Philippine Islands, manufactured into a rope commonly known as white rope; jute, grown in Bengal, the fibres of which are used for adulterating hemp; cocoanut fibre, for inferior ropes; Indian hemp, or sunn; and Spanish grass, or esparto. Of these, manilla is the most common substitute for hemp. The machinery employed for manufacturing any one of these several fibres into rope is similar, with slight modifications, to that employed for hemp.

The hemp plant from which the fibre is derived is treated by retting and scutching, in a similar manner to flax, and the hemp thus prepared is packed in bales, each bale of Italian hemp, jute, or manilla, weighing about 2½ cwt.

Chas. P. B. Shelley, in a paper read before the Inst. M. E., 1862, and from which the information in this article is largely derived, states that, in order to form the strongest rope out of a given quantity of material, whether hemp fibres or metallic wire, the fibres should be laid parallel alongside one another and secured at the ends, so that they may take any tensile strain put upon them in the direction of their length; the strength of such a rope will be equal to the strength of each fibre multiplied by the number of fibres in the section. Hemp fibres rarely exceed 4 ft. in length, so that the above method of making a rope exceeding 4 ft. in length will not apply to that material. In order therefore that the fibres may be securely and continuously connected together, they must be placed parallel to one another with the end of one fibre overlapping the end of its neighbour; and to prevent the fibres slipping from one another, friction is produced amongst them by twisting; but as the strength of the fibres is diminished when they are twisted out of the direction of the tensile strain which they are to sustain, no more twist should be given than is necessary to impart sufficient friction to prevent them from slipping and parting endways. It must be remembered that fibres of hemp, like metallic wires, have not the property of felting or uniting into one length by a kind of entanglement or matting together, in the manner common to the fibres of wool and other materials used in spinning. If a bundle of parallel fibres is twisted, those on the outer surface will be stretched and strained considerably more than those near the centre; and the farther they are from the centre the more they will be strained. Hence in constructing cordage it is necessary to form or build it up gradually from small bundles.

When the fibres are laid parallel and in continuous juxtaposition, they are said to form a sliver; and the sliver when twisted is said to be converted into a thread or yarn; and a number of yarns laid parallel and in juxtaposition, bound round by an external serving of yarn to hold them together, forms selvagee, which is the simplest construction of rope. If each of the yarns in the selvagee bore its fair share of strain, this would be the strongest kind of rope; but the objection to its more frequent use is that the outside serving of yarn frets away, and allows water to enter and rot the yarns inside. In order to overcome the objections to selvagee, ropes are made of strands, each strand consisting of a number of yarns twisted together, the strands being again twisted into the rope; the class of rope depends upon the number of strands and their arrangement. The yarn is twisted in the process of manufacture by a motion to the left from the right, or contrary to the motion of the hands of a watch, producing what is termed in rope-making a left-handed twist, being a spiral corresponding to the thread of a right-handed screw. The twist of each strand is in the opposite direction to that of the yarns composing it; and the twist of the rope itself is again in the opposite direction to that of the strands, or in the same direction as that of the yarns.

Ropes are commonly divided into three classes, known as hawser-laid, shroud-laid, and cable-laid ropes. Hawser-laid ropes are composed of three strands twisted together; the number of yarns for each strand in different sizes of hawser-laid ropes is dependent on the diameter or number of thread of the yarn. Shroud-laid ropes are composed of four strands. Cable-laid ropes are composed of three hawser-laid ropes twisted together. Cablets are small cable-laid ropes measuring from 1 to 10 in. in girth; larger sizes are termed cables. Shroud and hawser laid ropes seldom

exceed 10 in. in girth. A core or heart is used in shroud-laid ropes; it is made of rope, and is placed in the centre of the strands, running from end to end of the rope with the strands laid round it. In old worn-out ropes the core is always found to be broken in consequence of the stretching of the strands; for the strands being twisted spirally, and the core straight, the strands will give more under a load than the core, which cannot therefore be relied upon for adding strength to the rope; but it assists materially in keeping the strands in position during the manufacture of the rope by hand. Flat hempen ropes are made of four or six ropes, each composed of three strands, and laid alternately to the right and to the left; these are stretched side by side and sewn through in a zigzag direction.

Before the hemp is spun into yarn it has to be freed from dust and hard knots, and the fibres combed, so that they may be separate and parallel to one another. This process is called heckling, and is done either by machinery or by manual labour; the machinery for the purpose is similar to that used in the preparation of flax.

The next process which the fibres undergo is that of spinning into yarns. Hand-spinning is done on a long strip of ground called the rope-walk, which is generally covered by a low roof; sometimes the shed has an upper floor with a low roof, and then the spinning is done on the upper floor, and the other parts of the manufacture on the ground. The length of the walk and shed is about 1230 ft., or a little over 200 fathoms, and the width about 30 ft. The tie-beams of the roof are placed every 30 ft. or 5 fathoms apart, and carry a row of hooks on the under side.

The hand-spinning machine, Figs. 6730, 6731, is formed of two cast-iron frames with a band-

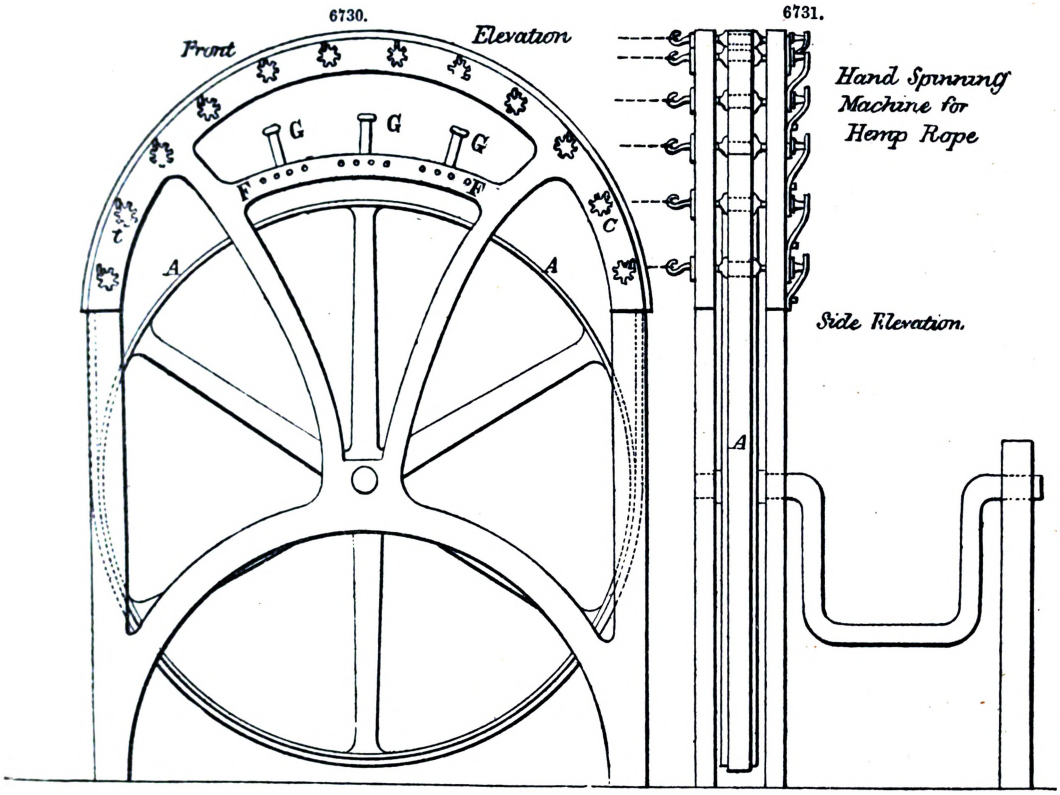

wheel A between them, driven either by a man at the winch-handle at the back, or by steam power. A band passing round the wheel passes over twelve wood rollers or whirls B, 1½ in. diameter, as shown enlarged in Fig. 6732, fixed on steel spindles about ⅜ in. diameter, which revolve in notches or bearings in the brass discs C screwed in the frames of the machine; the spindles are kept in their bearings by a ribbon of wrought iron screwed upon the outside of the frame. On the back end of the spindle is a shoulder, and between this and the brass disc is a loose collar to take the pull of the yarns in spinning; the spindle is kept in by a finger D fixed on the back of the frame. The front end of the spindle is drawn out into a hook E. The notches in the brasses C, shown enlarged in Fig. 6733, are for the purpose of forming fresh bearings for the spindles; there are eight notches in each brass, and when one notch is worn down the brass is turned to bring another notch round; when the whole of the notches are worn down a new brass is put in. The twelve hooks and whirls are set upon the semicircular upper part of the machine, and are made to revolve by the band which passes over them from the driving wheel A.

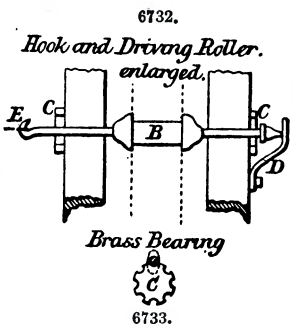

Each spinner before beginning to spin takes up a bundle of hemp sufficient in quantity to spin

one thread of yarn of the required length; he places the bight or middle of the length of the fibres in front of him, and turns the ends round his waist, crossing them behind. If the shorts are to be worked into the yarn they are tucked below the bight. Each spinner carries in his right hand a piece of stout list. There are twelve spinners to each machine, one to each hook. The spinner draws from the bight or front of the bundle round his waist a sufficient quantity of fibres for the size of the yarn or thread about to be spun, thus forming a sliver, which he twists with his fingers, and hooks the bight of the sliver on to one of the revolving hooks of the machine. He then walks backwards towards the bottom of the rope-walk, drawing the hemp from his waist and forming a sliver with his left hand, pulling some of the fibres back if they come forward too quickly, and drawing some forward if there are not enough to keep up the required size of yarn. The sliver passes through his right hand, with which by means of the piece of list he firmly grips it, so as to form the yarn. The spinner thus prepares the sliver and forms the yarn, while the machine gives it the twist. Care must be taken not to place the ends of one set of fibres too near to the ends of the next set, not giving them sufficient lap, otherwise the yarn will part by the fibres slipping endways from one another; and also to keep the fibres even and regular in thickness, in order that the yarn may be of equal strength throughout. The spinner's pace in walking backwards must be uniform and in accordance with the speed of the revolving whirls. The speed of the whirls and the amount of twist of the yarn is dependent upon the quality of the rope to be manufactured.

The twelve spinners are divided into three sets of four each; four risers, four middlemen, and four leaders. The four risers work from the four hooks on the left side of the machine, the four middlemen from the four middle hooks, and the four leaders from the four hooks on the right of the machine. All the twelve spinners start at once from the machine in the morning. The four risers spin down the walk a yarn one-third of 160 fathoms long and then stop, while the middlemen and leaders continue to spin past them. The four yarns of the risers are now unhooked from the whirls by a man at the top of the walk, and are passed each through a hole F in the frame of the spinning machine, Fig. 6730, to a reel at the back, upon which they are wound; the men at the bottom end of the yarn still hold on so as to prevent the yarns from untwisting, and follow it up to the machine as it is wound on to the reel. They then twist the ends of these yarns on to one of the holding pins G on the cross-bar of the machine frame, and start spinning again with four fresh yarns, which they will this time spin down to the whole length of 160 fathoms before stopping. The four middlemen spin down the walk a yarn two-thirds of 160 fathoms long and then stop, while the leaders still go on and pass them. Their four yarns are taken off the hooks of the machine and spliced on to the ends of the four yarns which were left on the holding pin by the risers; the yarns of the four middlemen are then wound on to the reel, the men following them up the walk and fastening the ends on to one of the holding pins; the middlemen then start fresh yarns of 160 fathoms length and spin down the walk. The four leaders spin down the walk a yarn 160 fathoms long, and then they also stop, and their four yarns are taken off the hooks and spliced on to the ends of the four yarns left on the holding pin by the middlemen; the yarns of the leaders are then wound up on the reel, followed up by the men.

As the spinner proceeds down the walk he tosses the yarn with his left hand on to one of the hooks in the rafters in order to support it; and in coming back he jerks it off again. The distances of one-third, two-thirds, and 160 fathoms are chalked on the side of the shed, and as the spinners of each set come to the distance they shake their yarns, and thus signal to the man at the machine for the yarns to be unhooked and reeled up.

6734.

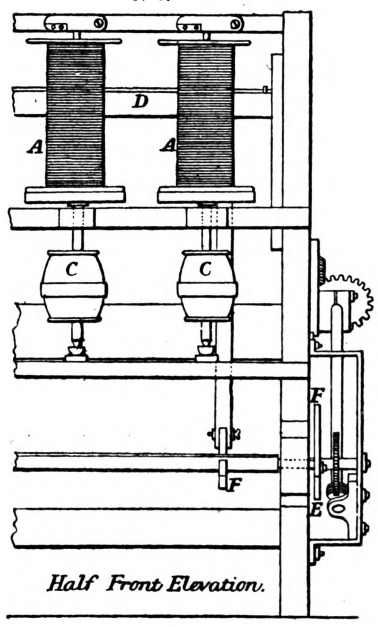

Half Front Elevation.

6735.

Winding Machine for winding the hemp yarns upon bobbins

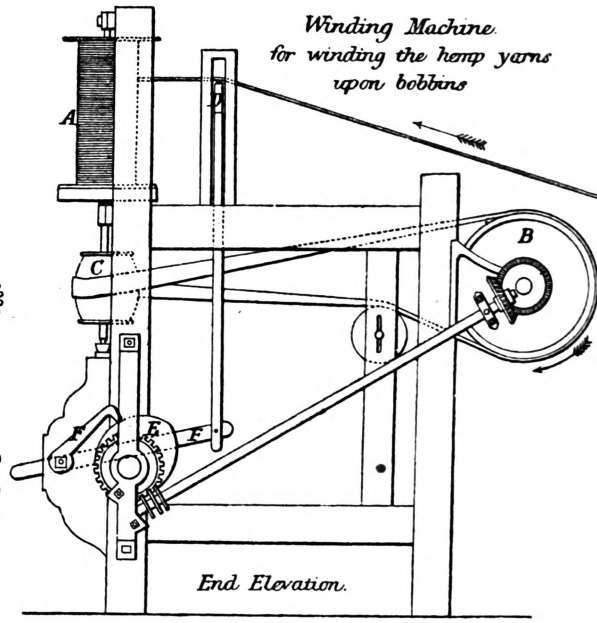

End Elevation.

When the reel behind the spinning machine has been filled with the four lengths of yarns spun, it is taken to the winding machine, Figs. 6734, 6735, which separates the four yarns on to

four separate bobbins A, A, and also reverses the lay of the yarn end for end, so that the fibres may lie in the proper direction for passing through the next process. Fig. 6734 is a front elevation of half the length of the machine, showing two of the four winding bobbins A, A; and Fig. 6735 an end elevation. The bobbins are driven from the drum B, which extends the whole length of the machine, by means of straps passing round the four riggers C, C, fixed on the vertical spindles that carry the bobbins A. The full reel containing the four yarns from the spinning machine is mounted on a temporary frame behind the winding machine, and the ends of the four yarns are led to the bobbins over a sliding bar D, which has a vertical reciprocating motion given to it by the cam E and levers F, for the purpose of filling the bobbins regularly and equally from end to end. Other forms of winding machines are used, but the principle of construction is the same in all. When the four bobbins are filled they are replaced by empty ones, until the whole of the reel from the spinning machine is wound off upon bobbins. The four full bobbins are then taken away and placed vertically in a large wooden frame called the bobbin-frame, which holds from 150 to 200 bobbins. Each bobbin contains about 14 lbs. of yarn.

The next process is that of twisting a number of yarns together into a strand, which is termed forming, and is effected in the forming machine and in the shed covering the rope-walk. Having ascertained the number or size of the thread that is of sufficient thickness to form the required strand, the number of yarns corresponding to that size of thread is selected; and the ends of the yarns of this size are drawn from the bobbins and brought in a converging direction to a square iron plate, called the register plate, perforated with a number of round holes. Each yarn is made to pass through a separate hole in the register plate, and the yarns all converge thence into one common point through the forming board, in which is a taper steel tube with a trumpet-mouthed taper hole through it. The hole in the tube varies in diameter for each size of strand and is selected by a gauge; the diameter of the tube for one of the strands for a rope of 3 in. girth is $\frac{5}{16}$ in. at the small end and $\frac{9}{16}$ in. at the large end, and for the strands of a rope of 2 in. girth it is $\frac{3}{16}$ in. at the small end and $\frac{7}{16}$ in. at the large. The convergent yarns are entered into the tube at the large trumpet-mouthed end, and are forced through, fitting tightly into the tube; they are thus squeezed together previously to being attached to the forming machine.

The forming machine for twisting the hemp yarns into strands, Fig. 6736, is mounted on

6736.

Forming Machine for "forming" the strands for Hemp Rope.

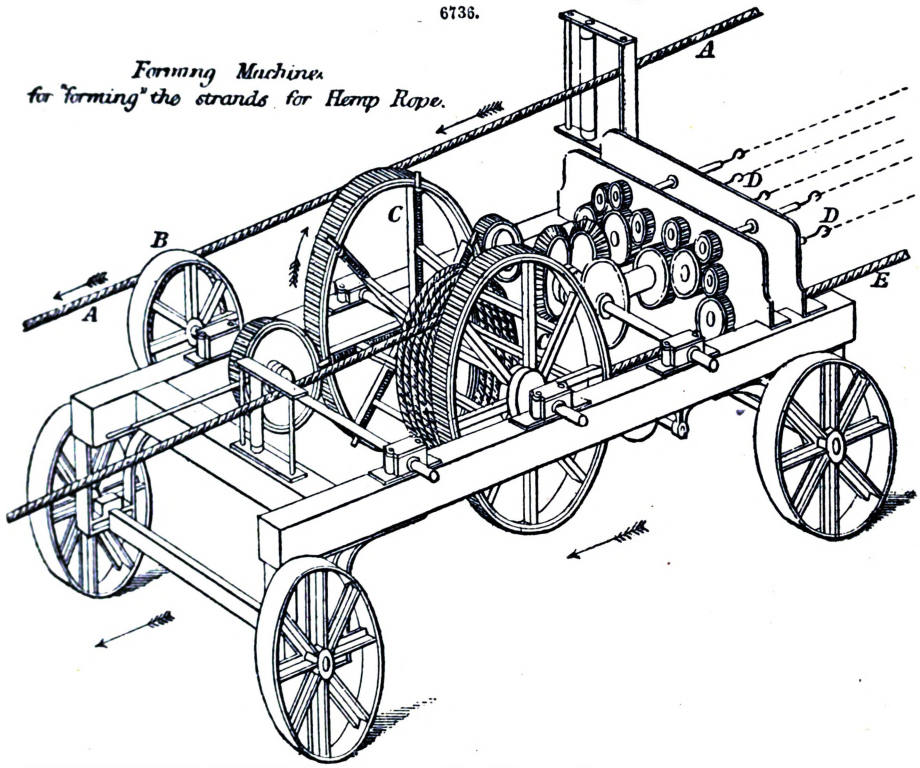

wheels, and made to travel along the length of the rope-walk by the endless rope A, called the fly-rope, which passes round pulleys at the top and bottom of the walk and acts as a driving rope, being driven by an engine. This fly-rope takes a turn round the whelp-wheel B, which gives motion by gearing to the drum C and the twisting hooks or nibs D for forming the strands. A fixed rope E, called the ground-rope, made fast at the ends of the walk, is coiled round the drum C, so that by the revolution of the drum the machine is made to travel along the walk. During the travel of the machine the yarns hooked upon each nib are drawn out and twisted together into a strand; each nib taking the number of yarns required to form the strand. The speed of revolution of the hooks is regulated according to the kind of rope into which the strands are to be made; and the great object is to adjust the rate of travel of the machine in

relation to the speed of the hooks, so that the strands may receive the proper amount of twist in a given length. For this purpose the staves of the drum C which gives the travel of the machine are made capable of being shifted to or from the centre of the drum by means of adjusting screws, so as to diminish or increase the rate of travel.

After leaving the forming machine the strands are laid into a rope by two laying machines, Figs. 6737, 6738, one at the upper end of the walk and the other at the lower end. In this process, instead of being twisted together as the yarns are in the previous process, the strands are

6737.

Upper End Laying Machine, for "laying" the strands of Hemp Rope

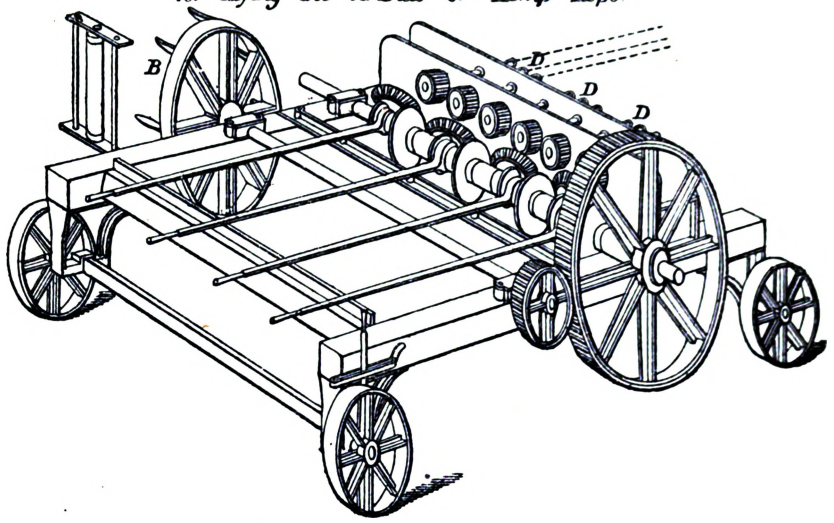

6738.

Lower End Laying Machine for "laying" the strands of Hemp Rope.

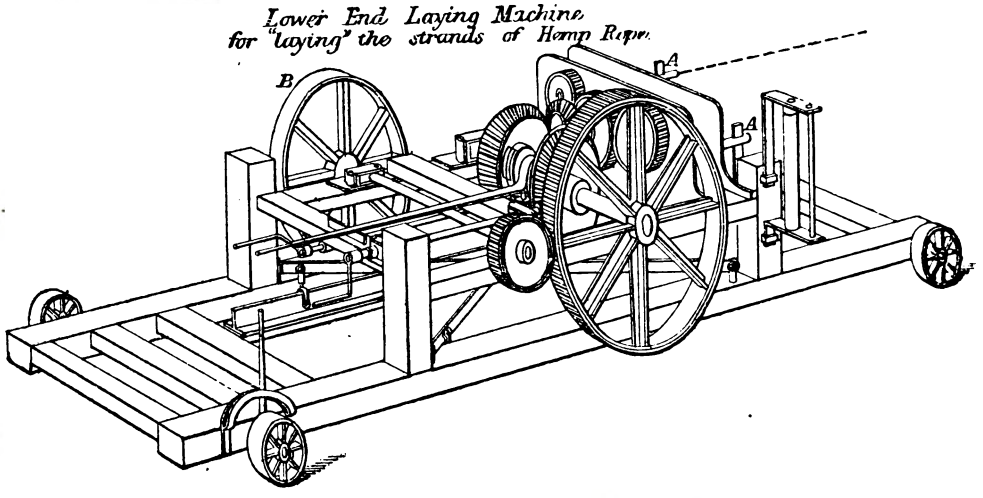

placed or laid in their spiral position in the rope without being twisted. The laying machine at the upper end of the walk, Fig. 6737, is fixed, and the three strands to form the rope are attached to the hooks D, which are made to revolve in a similar manner to those in the previous forming machine, by the fly-rope passing round the wheel B. The lower end laying machine, Fig. 6738, is left free to travel part way up the walk as the length of the strands become shortened by their being laid into a spiral in the rope. The wheel B here drives the two forelocks A, A, to one or other of which the strands are made fast, according as the twist of the rope is to be right-handed or left-handed. The three strands for the rope are stretched tight along the length of the walk from the hooks D of the laying machine at the upper end to the forelock A of the lower laying machine, and are supported off the ground and kept separated by means of posts, called samson posts, placed at every 5 fathoms length, with pegs to carry the strands. A taper piece of wood with three grooves, called the laying top, shown enlarged in Figs. 6739, 6740, is then inserted between the strands close to the lower machine, with its smaller end towards the forelock A, one of the strands lying in each of the grooves. A transverse hole is made through the laying top, through which is passed the top stick or handle that the top is held by. The laying

tops are made of various sizes, according to the size of rope required; for a rope of 3 in. girth the top is 12 in. long, 10 in. diameter at the larger end, and 8 in. at the smaller. When the rope is more than 3½ in. in girth, a top cart is used for supporting the top.

The laying machines being now put in motion, the revolution of the forelock A, Fig. 6738, gives the twist or hard of the rope, while the laying top is firmly held by the handle from turning. The hooks D, Fig. 6737, at the other ends of the strands are made to revolve in the opposite direction to the forelock A, which is twisting the rope, so that the twist put into each of the individual strands at the point where they are united into the rope immediately behind the laying top is taken out again by the hooks at the upper end. The laying top is gradually pressed forwards by the closing of the strands upon one another behind it; its motion requires to be very regular, and it is prevented from moving forwards too fast by a tail or piece of rope attached to the top handle, which is coiled round the rope already twisted, and thus acts as a drag to the top. The two laying machines must be driven at exactly the proper speed relatively to each other, so that the twist put into the separate strands at the laying top may be exactly neutralized by the revolution of the hooks; otherwise if the hooks revolve too slow, they will partially untwist the individual strands, since the twist of the yarns in each strand is in the contrary direction to that of the strands in the rope; or if too fast, the strands will become twisted tighter. In order that the man holding the laying top may find out how the machines are working, whether too fast or too slow relatively to each other, he makes a mark on one of the strands close to one of the supporting posts; if the strands are being twisted too fast by the hooks of the upper laying machine, the mark on the strand advances towards the upper end of the walk, from the yarns themselves becoming twisted tighter together in each strand, and the length of the strand is shortened; but if too slow, the mark recedes towards the lower end, from the partial untwisting and consequent lengthening of the individual strands. In laying the strands care is required with regard to the angle that the strands take. Should the tension on the strands become unequal, the required additional twist is given to those which have got slack by throwing out of gear those hooks of the upper laying machine to which the tighter strands are attached, and allowing the others to continue revolving until all the strands have again become equally strained. As the formation of the rope proceeds, the lower laying machine is gradually drawn up the walk by the shortening of the strands as they are laid together into the rope; and press weights are placed on the frame of the machine to retard its motion and hold the rope tight enough during the laying. Formed strands of 180 fathoms length will make 120 fathoms of hawser-laid rope; the length of the strands will be determined by the length of rope required.

6739.

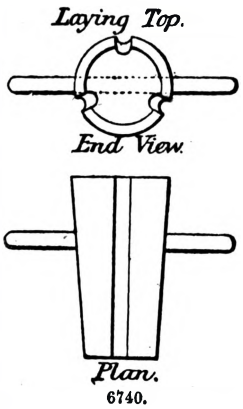

6740.

After the rope is taken off the laying machines, it is coiled on to a drum driven by steam power, being guided from end to end of the drum by the workman, whose hands are protected by a piece of old cordage twisted on the rope that is being coiled; this gives a polish and finish to the surface of the rope.

The previous description has referred only to ropes manufactured by hand. In the application of machinery to this manufacture, Cartwright appears to have invented the first rope-making machine, which is the basis of others since constructed, his Cordelier having been brought out in 1792. Fig. 6741 shows the cordelier, which revolves on the horizontal shaft A, the laying top B

6741.

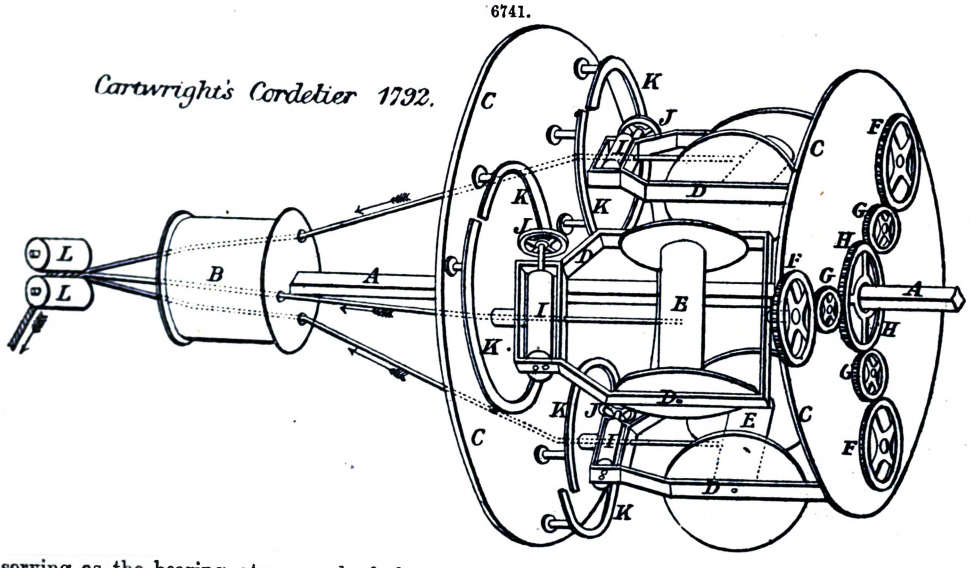

serving as the bearing at one end of the shaft, having holes through it for the strands to pass through. In the discs C, C, fixed on the shaft A are centred the three horizontal spool-frames D, carrying the spools E, which contain the three strands to be laid together. As the cordelier

revolves, the axes of the spools are preserved constantly parallel to themselves by the spool-frames D being made to rotate on their bearings once for every revolution of the machine, by means of the pinions F on the spool-frame bearings, and the counter-wheels G gearing into the central dead-wheel H, which is of the same diameter as the pinions F, and is held stationary while the shaft A

6742. 6743.

Spinning Machine for spinning hemp sliver into Yarn.

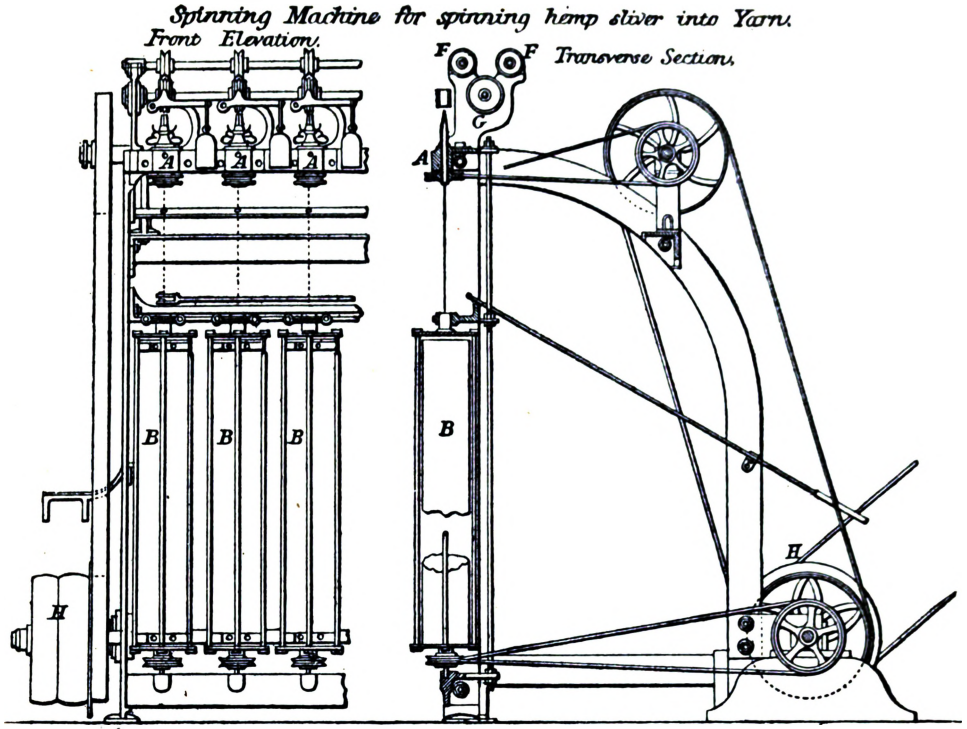

revolves within it. The bearings at the other end of the spool-frames D are hollow, for the strands to pass through to the laying top B. The strand is drawn off the spool by the pair of delivering rollers I, which receive motion by a worm-wheel J on the axis of one of them gearing into the worm K within which the spool-frame revolves. The drawing rollers L, L, draw the finished rope forwards as fast as it is made, and hold it from turning. This machinery was a few years afterwards improved by Huddart.

Huddart's spinning machine for converting sliver into yarn is shown in Figs. 6742, 6743. The sliver, previously formed by another machine, is contained in the twelve cans B, which are driven rather faster than the spinning tubes A, in order to give a slight preparatory twist to the sliver. The spinning tube A, shown enlarged in Figs. 6744, 6745, has a spring clip C at the top, which grips the thread spun from the sliver and twists it with great rapidity, thus effecting the spinning. The thread so formed is then subjected to a considerable amount of tension by being drawn through the compressing jaws D, Figs. 6744, 6746, and round the stretching pulleys E, F, and G, Fig. 6743, the last of which is a double pulley with two grooves. The thread passes first over the pulley E, then under one of the grooves in the pulley G, over the pulley F, and again over the second groove of the pulley G, whence it passes away to a winding drum at the back of the machine. The main driving shaft of the machine is driven from the engine by a belt over the fast-and-loose pulleys H. There are three horizontal winding drums behind the machine, upon which the yarns are wound, each drum taking the yarns from four of the spinning tubes; the yarns are delivered upon the drums through holes in a longitudinal traversing bar, which is moved endways backwards and forwards by a rack and pinion so as to guide the yarns from end to end of the drums alternately.

6744.

Detail of Spinning Tube and Compressing Jaws.

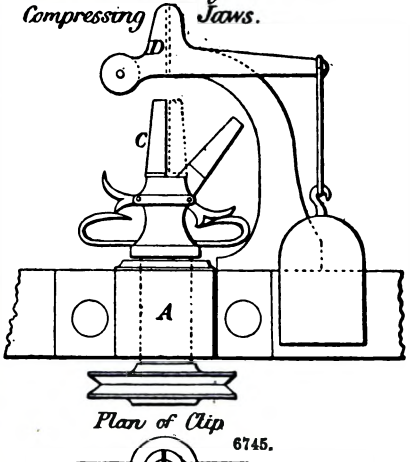

Plan of Clip

6745.

Plan of Compressing Jaws.

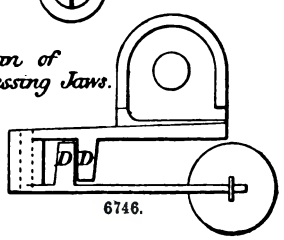

6746.

If the ropes are to be tarred, the tar is applied to the yarns on leaving the spinning machine. For this purpose they are first wound off from the drum behind the spinning machine upon a winder called a whimwam, made of a light open frame of iron and wood revolving on a horizontal shaft. The loose ends of the four yarns on the drum are attached to a hook at the right end of the winder, which is then turned by a winch-handle to wind the yarns on, the yarns being guided on from end to end by a traversing plate with four holes in it which receives the required traverse motion from the shaft of the winder. On reaching the left end of the winder the yarns are doubled round the hook at that end, and the winch is then turned in the opposite direction, winding the yarns on till they reach the right end, where they are similarly doubled round the hook at that end, and the winding is then again reversed. When a sufficient quantity of yarn has been put on the winder, the hook at one end is taken out and the yarn is uncoiled from the winder, thus forming a long skein called a haul, which is then coiled upon a small circular turn-table, about 4 ft. diameter, mounted on wheels. The haul of yarns is then taken to the tarring shed, and uncoiled from the turn-table into a caldron of tar heated by fire or steam; one end of the haul is lifted from the tar, and by means of a capstan is drawn through a sliding nipper or squeezer for the purpose of squeezing out the superfluous tar from the yarns. After the haul has lain for some time, the longer the better, the four yarns are separated and wound on to four bobbins by the winding machine previously described; and are then passed to the bobbin-frame ready for being twisted into strands. Huddart did not make the yarns into a haul previous to tarring, but passed them from bobbins direct from the spinning machine through the tar, and thence through nippers to the register plate of his registering machine. The length of a haul is 55 fathoms; it contains about 144 threads, and takes about 20 minutes to pass through the squeezer from the tar caldron, that is about 16 ft. in a minute. The tar used should be the best Archangel tar, of a good bright colour, and heated to a temperature of 212° Fahr. The usual proportion of tar remaining in the yarns is from one-quarter to one-fifth of the weight of the untarred yarns. The yarns when tarred ought to be of a bright brown colour.

The registering machine, shown in plan in Fig. 6747, is for the purpose of twisting the yarns

6747.

Plan of Registering Machine for twisting hemp yarns into a strand, and winding the strand on a Drum

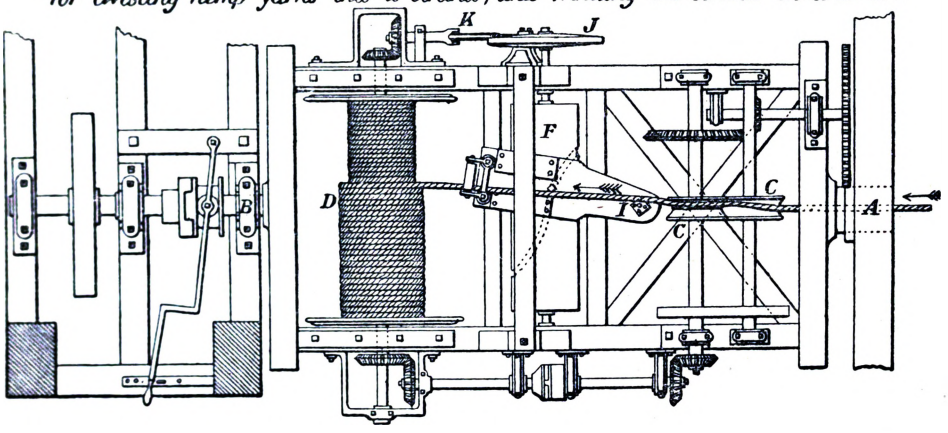

into a strand and winding the strand upon a drum as fast as it is formed. The whole machine revolves with rapidity on the horizontal bearings A, B, being connected with the driving power by a sliding friction-clutch at B. The strand enters through the hollow bearing A, which grips it tight and thus twists the yarns into the strand by its revolution. The strand is drawn in by the pair of drawing pulleys C, taking half a turn round each, and is delivered upon the winding drum D by the guiding frame E, which is made to move from end to end of the drum by means of a stud on the frame working in a spiral groove cut in the barrel F. The drawing pulleys C, winding drum D, and grooved barrel F are all driven from the spur-wheel G gearing into a stationary pinion fixed to the plummer-block in which the bearing A revolves. As each successive coil of strand wound on the drum D increases its diameter, an increased tension would be thrown on the strand, a friction-clutch is therefore inserted at H in the intermediate shaft which communicates the driving motion from the drawing pulleys C to the winding drum D, in order to prevent the drum from overwinding the pulleys, the friction being adjusted to the exact limit of tension desired in the strand. The guiding frame E, which delivers the strand from end to end of the winding drum, vibrates on a centre at I, and its rate of travel is varied for different sizes of strand by changing the worm-wheel J on the spindle of the grooved barrel F; the universal joint K allows of the driving worm being set at different inclinations for gearing into a larger or smaller worm-wheel J.

The strand made by the registering machine is wound off the drum D on to a loose reel, so that when transferred to the drum of the spool-frame in the laying machine it may lie the same way end for end as on the drum D, in which state it is ready for being laid into a rope. The length of the strand is measured by passing it over a pulley of definite diameter, to which is attached a counter with a dial, indicating the number of fathoms of strand that have passed over the pulley.

Fig. 6748 is a general elevation; Fig. 6749 a plan at the top; and Fig. 6750 a sectional plan through the spool-frames; Fig. 6751 is a side elevation of one of the spool-frames to a larger scale

of the rope-laying machine for laying the hemp strands into rope. The three spools A, filled with strand from the registering machine last described, are carried in the vertical spool-frames B, which

6748.

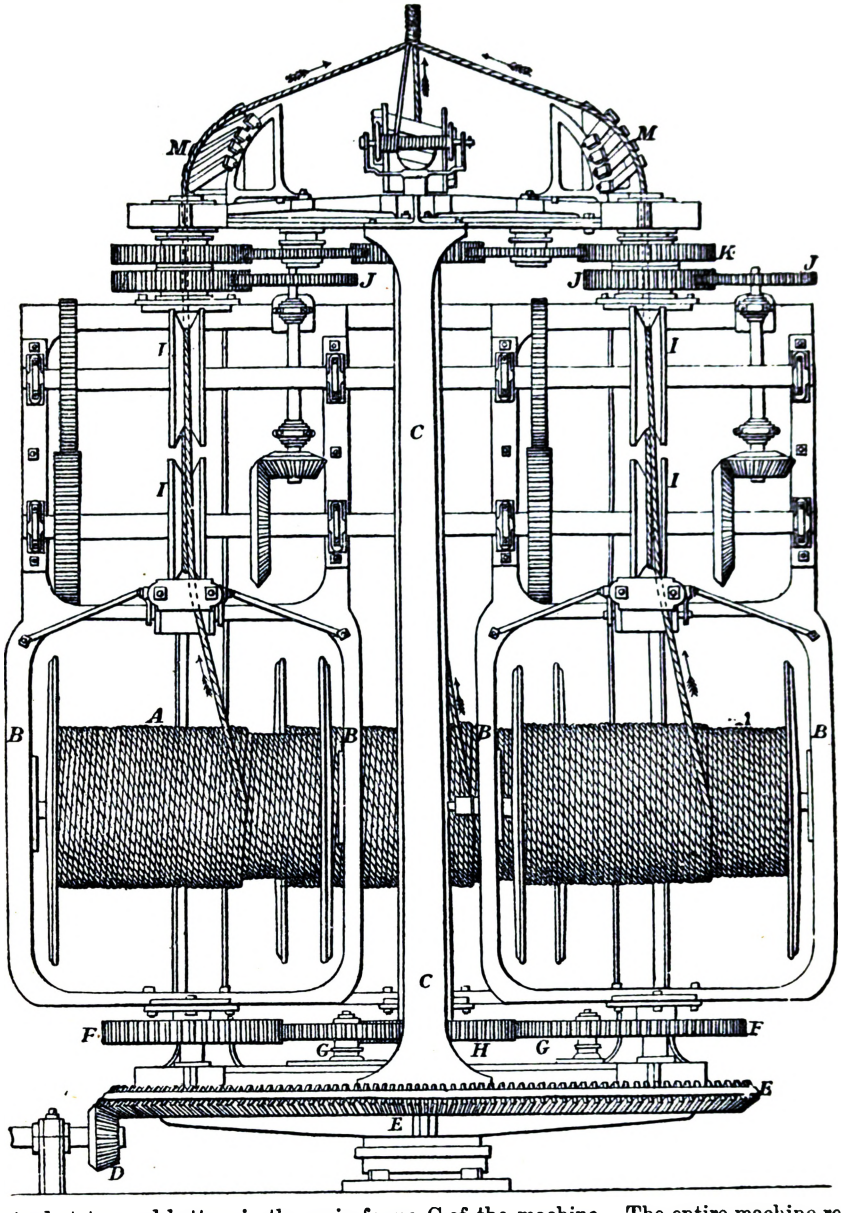

are centred at top and bottom in the main frame C of the machine. The entire machine revolves round the fixed centre shaft, and is driven by the small bevel-pinion D gearing into the wheel E at the bottom of the main frame C. The spool-frames B are made to rotate on their axes during the revolution of the machine by means of the pinions F on the spool-frames and the counter-wheels G gearing into the dead-wheel H, which remains stationary, being fixed on the centre shaft of the machine. If the pinions F were of exactly the same diameter as the dead-wheel H, the spool-frames would make exactly one rotation on their axes for each revolution of the machine, and the spools would be preserved constantly parallel to themselves while the machine revolved, so that the strands would be laid into the rope without any additional twist in the individual strands. But in order to ensure the yarns in each strand being thoroughly closed upon one another, a slight additional twist or forehard is given to each strand in the act of laying it into the rope, by making the spool-frames perform rather more than one rotation on their axes for each revolution of the machine, since the twist of the yarns in each strand is in the contrary direction to the twist of the strands in the rope. The pinions F on the spool-frames are therefore made of smaller diameter than the dead-wheel H in the proportion of 13 to 14. From the spools A the strands are drawn off round the stretching pulleys I, I, as dotted in Fig. 6751, which are driven by bevel-gearing and pinions J from a dead-wheel fixed on the centre shaft at the top of the machine, with counter-

wheels and pinions K similar to those at the bottom. The strand is pressed tight into the groove of the upper stretching pulley I by the small tightening pulley L, Figs. 6751, 6752. The spool A is retarded from unwinding too fast by a friction-brake, which is adjusted to any degree of tight-

6749.

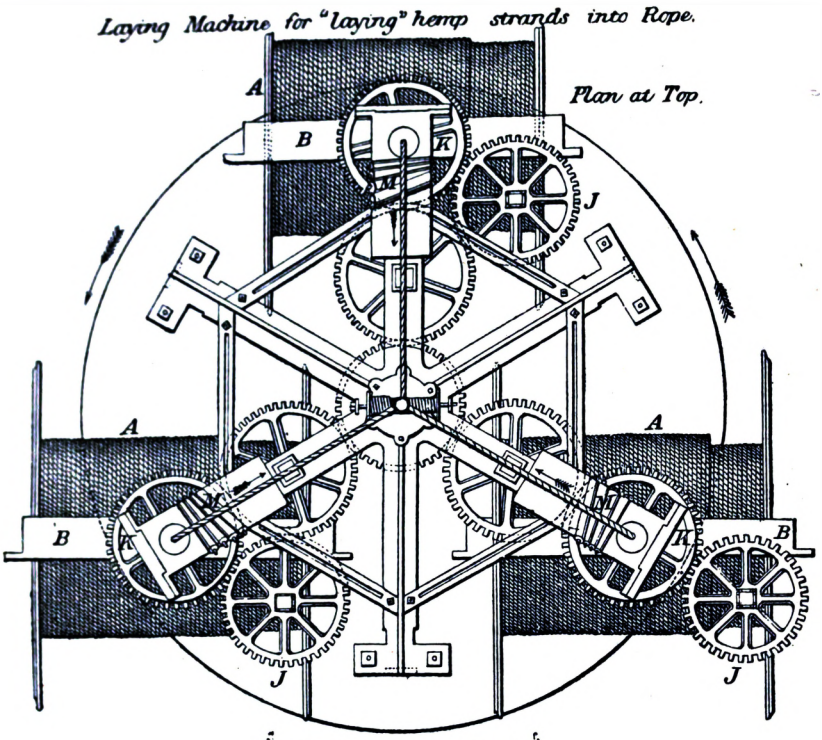

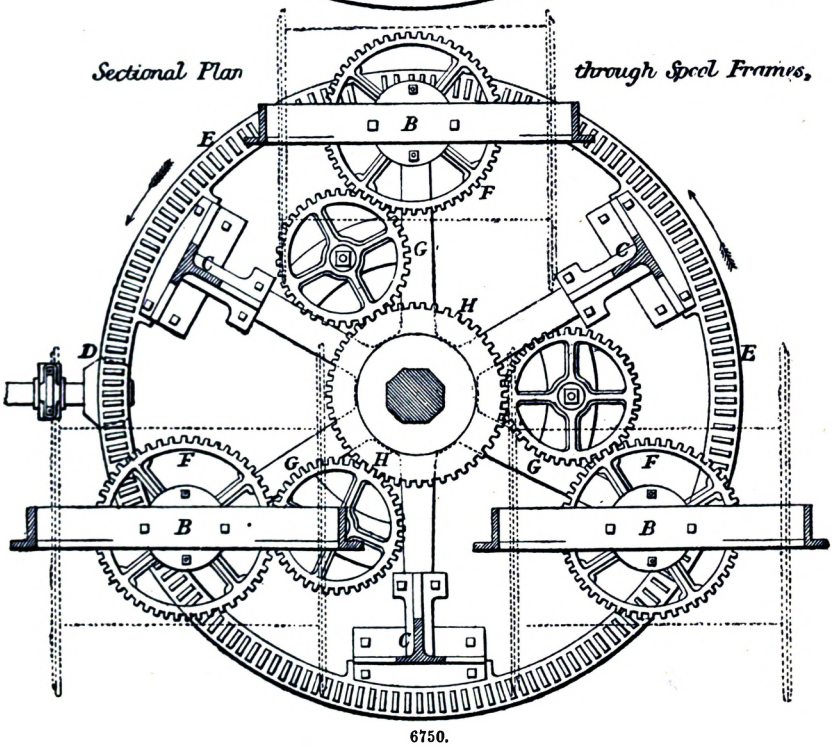

6750.

ness required. The strands pass up through the hollow bearings at the top of the spool-frames B and through the pinions K, and are curved over the oblique guiding rollers M, which are fixed at varying inclinations in order to prevent the strands from slipping off. The three strands then

unite at the centre, and are laid together into the rope by the revolution of the machine, each strand being laid into the rope with the required amount of forehard by the simultaneous rotation

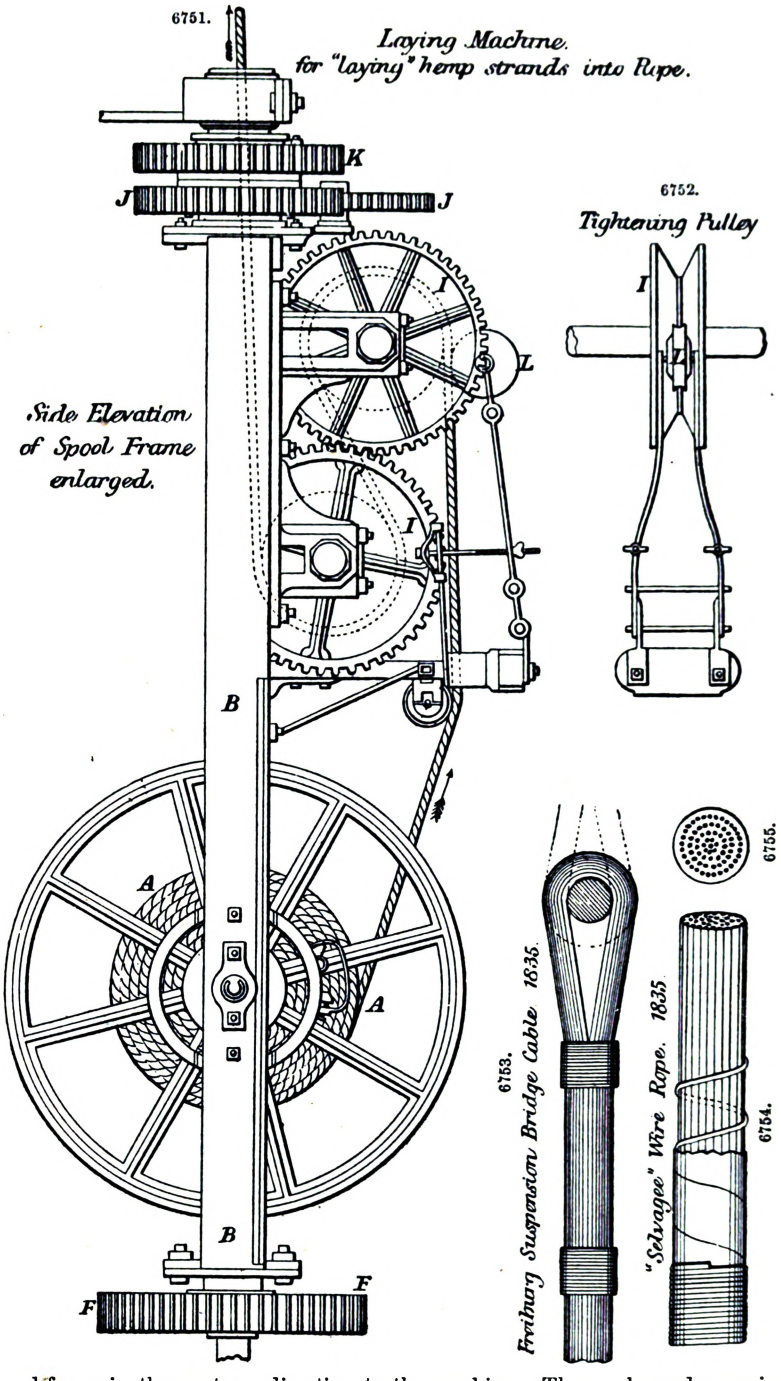

of its own spool-frame in the contrary direction to the machine. The newly-made rope is carried upwards to another machine, where it is stretched over and under three pulleys driven by steam power; and as it passes from the last pulley it is compressed by a roller kept against the rope by a strong steel spring. It is afterwards finally coiled away in a warehouse.

Wire Ropes.—Wire ropes were used as early as 1822 for the supporting cables of a suspension bridge at Geneva, and also for the Freiburg Suspension Bridge of 807 ft. clear span, erected in 1835. The wire ropes in the latter case, Fig. 6753, are constructed of twenty bundles or strands of straight iron wire 0·125 in. diameter, stretched parallel, forming a rope 5½ in. diameter, and bound round with wire at 2-ft. intervals.

The first form of wire rope regularly manufactured was known as selvagee, Figs. 6754, 6755. It

consisted of a number of hard or unannealed wires, of about 12 to 16 wire-gauge, or 0·110 to 0·065 in. diameter, which were stretched parallel and bound together by a fine wire of about 20 wire-gauge, or 0·036 in. diameter, wound spirally around; after which a parcelling of woollen list was also wound round in the contrary direction, with the edges lapped so as to cover the wires entirely; the rope was completed by a service of tarred yarn wound on in the contrary direction to the list. The method of making the rope was simply to warp or stretch the wires at a uniform tension over two hooks set at the distance of the length of rope required to be made, passing the wires backwards and forwards over the hooks as many times as was necessary to make up the size required. A solution of india-rubber boiled down in linseed oil, with a mixture of resin and tar, was rubbed carefully into the body of the rope previous to binding up, and after the binding wire had been wound on, the solution was again applied to the exterior wires to prevent oxidation, the process of galvanizing not being practised at that time. The parcelling of list was also saturated with the solution, the yarn being tarred as usual. The binding and parcelling were always done by hand, before the rope was taken off the hooks; but the service of yarn was usually laid on by a machine for that purpose, though occasionally also by hand. The method of attaching the fittings, such as shackles, thimbles, and dead-eyes, was either by forming an eye during the process of warping to receive them, or by inserting the end of the rope stripped to the wires into a conical socket attached to the shackle, and turning back the ends of the wires so as to prevent the rope being drawn out. But more generally the fittings were turned in. that is, the end of the rope was doubled round and seized or bound to the standing part. It will be seen that it was very difficult to splice this form of rope, owing to the absence of twist or lay.

Ropes thus made were exceedingly rigid and non-elastic, but possessed greater strength than any other construction; in fact, the entire strength of the wire was preserved. The parcelling and service added to the size, but not at all to the strength, being intended only for protecting the wires.

The machinery for making these selvagee ropes consisted simply of the two hooks over which the wire was warped, which were attached to movable posts set at the required distance asunder. The serving machine was a long wood trough, extending nearly the entire length of the rope-ground, having a revolving shaft at each end, with a hook at its extremity, and carrying a fast-and-loose pulley, over which a driving band passed. The two serving hooks were driven at the same speed of about 400 revolutions a minute; and the shifting forks of the driving bands were connected by a cord extending throughout the length of the ground, so that the workman could stop or start the machine at any part. An ordinary serving mallet was employed for laying on the yarn, and was guided by the workman, who also regulated the tension, the yarn being supplied from reels hung overhead.

The next description of wire rope was known as formed rope, Figs. 6756, 6757. It consisted of a number of soft or annealed wires, usually about 14 wire-gauge, or 0·085 in. diameter, formed or twisted into a strand, but with little or no regard to regularity; and four of these strands were laid into a rope, though this number was not always the same. The number of wires was varied according to the size of rope required, and occasionally the size of wire was altered to suit circumstances. These ropes closely resembled ordinary hemp ropes in appearance. The twist caused by forming the strands remained in the wire as a permanent set, and the strands were laid together with an extra amount of twist or forehard in each strand, which was necessary to keep the rope together. Little or no injury was done to the wire by this process, owing to its being annealed, and also from the length of the twist of the wires in each strand, which was usually about 12 in. pitch; but it would be almost impossible to use hard wire in this manner.

6756. 6757.

"Formed" Wire Rope. 1837.

First Flat Wire Rope. 1836.

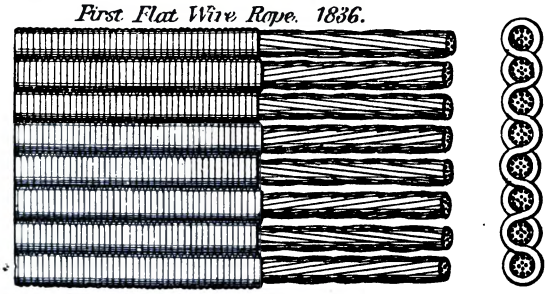

6758. 6759.

The formed wire ropes possessed great pliability and some amount of elasticity; they were readily spliced and fitted like ordinary ropes, and though not so strong as the selvagee wire ropes, they possessed many advantages and were more easily introduced. The small size and soft nature of the wire used offered little resistance to exterior friction, and when employed as incline or running ropes they soon flattened and wore out. The irregularity with which the wires were formed or twisted into strands, frequently crossing and recrossing one another, and the great difference in the length of the wires, as well as the short lay of the ropes, amounting to only 4½ in. pitch, materially assisted to destroy them. Even when used simply as standing rigging, the wires frequently broke, and the broken ends stuck outwards to the danger of the sailors handling the rigging; and to prevent accidents they were served with yarn, like the selvagee rope, after having been wormed, that is, having a yarn laid in between each strand so as to alter the shape to a round form.

The first flat wire ropes, Figs. 6758, 6759, were composed of from eight to twelve formed strands, with the twist alternately right and left handed, made of a number of fine wires usually about 18 or 20 wire-gauge, or 0·050 to 0·036 in. diameter. These strands were placed in the position of the warp, in a loom of the ordinary form but greater strength, and were woven together with a shoot of strong

yarn. Very little twist was put into the strands, as the yarn when woven in kept them in form. These ropes were by no means durable, as the yarn soon wore out, especially at the edges; and their application was very limited.

Flat wire ropes were next made of four or six formed ropes, each made of four strands laid very long, and alternately right and left handed; these were stretched together side by side and sewn through with six wires of No. 14 or 16 wire-gauge from side to side in a zigzag direction, as in Figs. 6760, 6761. This was accomplished by carefully inserting a needle of dagger shape between the strands of the ropes, and so making a passage for the wires, which were carefully laid side by side. The round ropes thus bound together resembled the ordinary flat hemp rope in appearance. The process was tedious, on account of the care necessary to avoid penetrating the strands with the needle, which would do great injury to the rope.

6760. 6761.

Second Flat Wire Rope. 1837

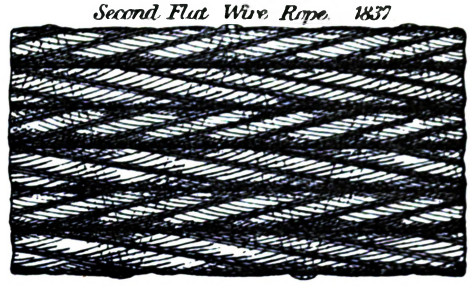

Laid Wire Rope. 1838.

6762. 6763.

The last construction of wire rope is known as laid rope, Figs. 6762, 6763, in which the strands were made of a few wires, seldom exceeding six, laid around a core of hemp or wire, the wires of the strand being entirely free from twist, each wire being simply laid in a spiral form without any twist in the wire itself, as shown in the diagram, Figs. 6764, 6765. Six of these strands were again laid

6764. 6765.

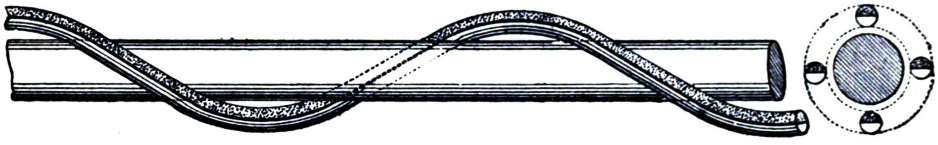

without forehard or additional twist into a rope, around a core generally of hemp. The size of wire usually varied with the size of the rope, as the total number of wires, 36, was seldom varied. The wire was hard or unannealed; and by the system adopted in making, a uniform length was obtained with entire absence of twist. By this means the full strength of the wire was retained, and consequently the rope produced was much stronger for the same weight. An increase in size is, however, caused by the introduction of the hemp cores, which amount to one-seventh of the entire bulk in the case of ropes with six strands of six wires each, the construction now usually adopted.

The machinery used in the manufacture of laid strands and ropes originally consisted of the ordinary machinery used on rope-grounds for laying or closing hemp ropes, the machines at each end of the factory being speeded alike, as previously described.

The next form of machine adopted had simply one hook, mounted in bearings on a fixed frame, and driven by hand or power, to which all the wires composing the strands were attached; these were stretched along the ground, supported at intervals on trestles, till they reached the other end, where they were hooked on to swivels or lopers. Attached to the lopers were cords passing over pulleys and having weights suspended from them, so as to regulate the tension of each wire, and also allow for the shrinkage of the rope in the process of making. When the hook was set in motion, the twist in each wire traversed the entire length of the wire, and escaped at the end by means of the loper or swivel. A perforated plate or laying top was used, carried by a workman along the ground, regulating the amount of lay or twist.

The next machine used, shown in Fig. 6766, was a modification of Huddart's hemp rope-laying machine, previously described. In these machines the operation went on continuously until the required length of strand or rope was made, giving rise to the name of endless machines; they were also called vertical machines, because the main frame carrying the spools revolves on a vertical axis. The first modification of this machine for making wire ropes consisted in altering the gearing for working the spool-frames B, so that no additional twist or forehard was put in the wires as in the strands of hemp ropes, the pinions on the spool-frames being now made of exactly the same diameter as the central dead-wheel, as in the diagram, Fig. 6767, causing the spool-frames to make exactly one rotation on their axes for each revolution of the machine. Machines of this description were also made to work on a horizontal axis instead of a vertical one; and a balance weight was sometimes attached to each spool-frame in the horizontal machines, which by its gravity prevented the spool from twisting the wire, and rendered gearing unnecessary for the purpose; but the speed of these machines was limited in consequence.

Another machine was that known as a compound machine, for producing the entire rope finished at one operation; and may be described as consisting of six stranding machines, like that last described, all mounted on one large frame and revolving horizontally, the necessary motion being given to the machinery to lay the wires into strands and then the strands into rope, without producing any twist in the individual wires. This machine, though a mechanical success, was a commercial failure, and was soon abandoned for the simpler and cheaper plan of first making the strands and then laying them into ropes on separate machines.

Some modification was then made in the vertical machines, Fig. 6766, in the means of preventing twist of the wires during the laying, by employing a centre crank or eccentric and four

6766.

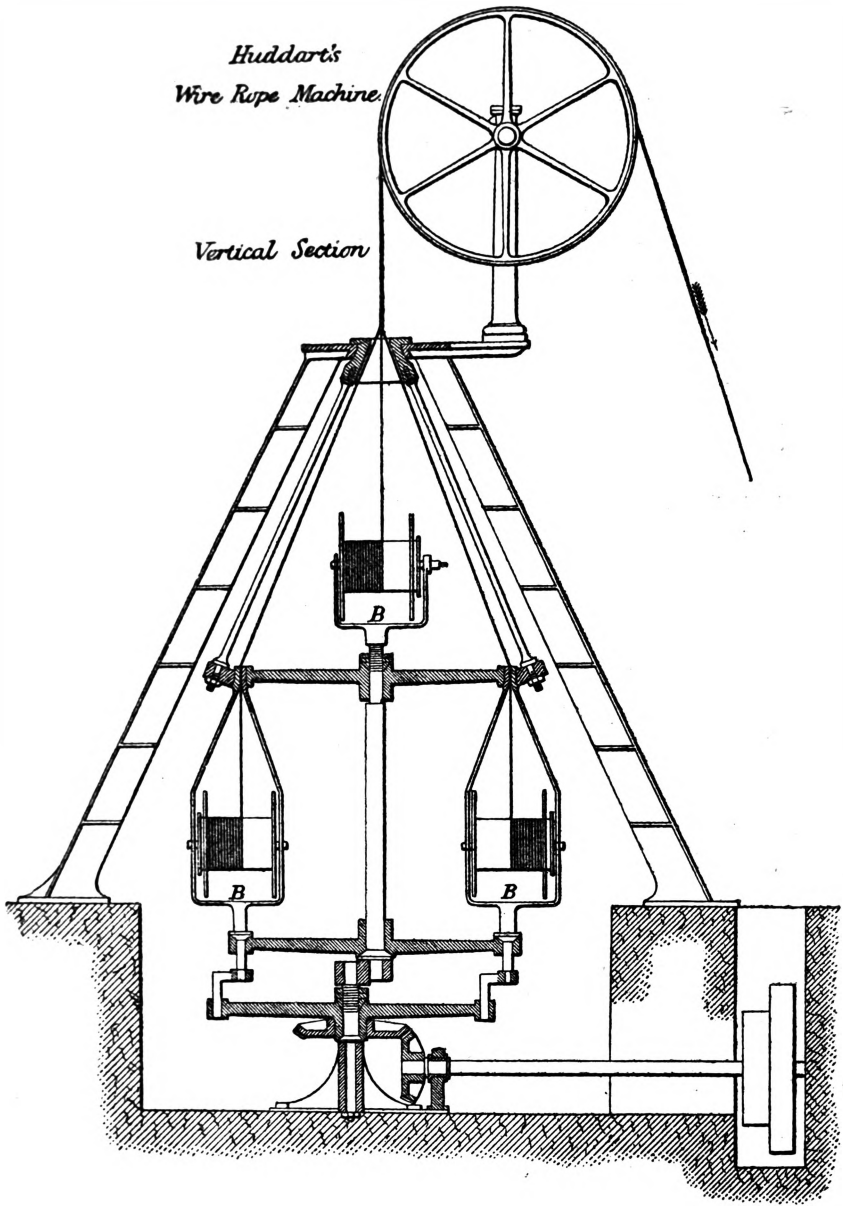

outer cranks on the spool-frames B, Fig. 6766, and in the diagram, Fig. 6768, and also by substituting chain wheels and pitch chain, Fig. 6769.

The method of joining the lengths of wires was in the first instance by twisting the ends together; afterwards, in the manufacture of laid strands, by tucking, that is cutting out the hemp core about 12 in. from the end of the wire that has run out, and inserting in its place the end of the new length of wire; the rest of the wires are then laid up on the new wire as a core for a length of 6 in., when the new wire is brought out into its right place and the remaining 6 in. of the old wire passed in as the core, on which the laying is again continued till the end of the wire is reached; the proper hemp core is then replaced, and the process of laying resumed as before. Some manufacturers prefer to braze or weld the ends of the wires together for joining the lengths, wire as small as No. 16 wire-gauge, or 0·065 in. diameter, being welded by experienced workmen by means of a common portable forge.

In Archibald Smith's wire-rope machine the bobbin-frames and bobbins are placed one behind another all in the axis of the revolving frame, and remain stationary in that position while the frame alone is made to revolve.

Smith's machine is shown, Figs. 6770 to 6773. Fig. 6770 is a side elevation of the entire

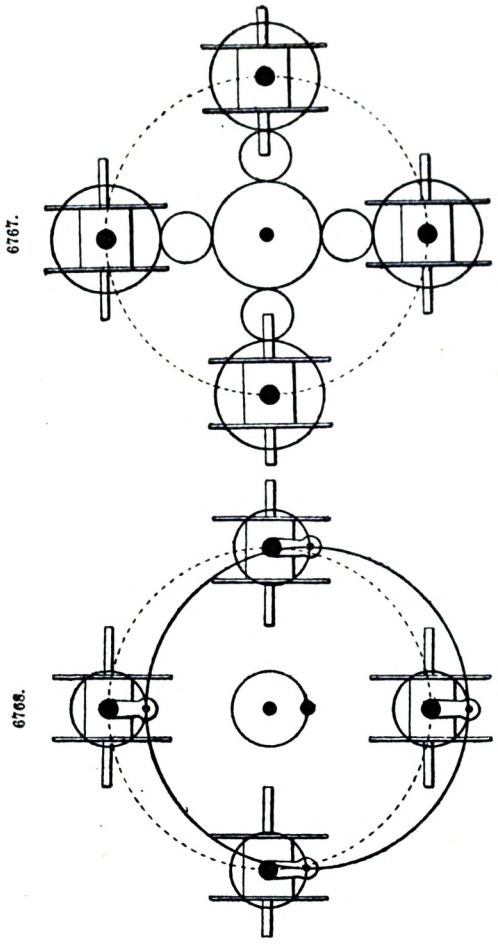
6767.
6768.

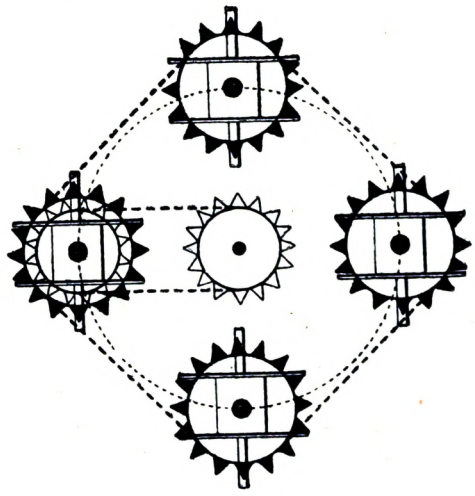
6769.

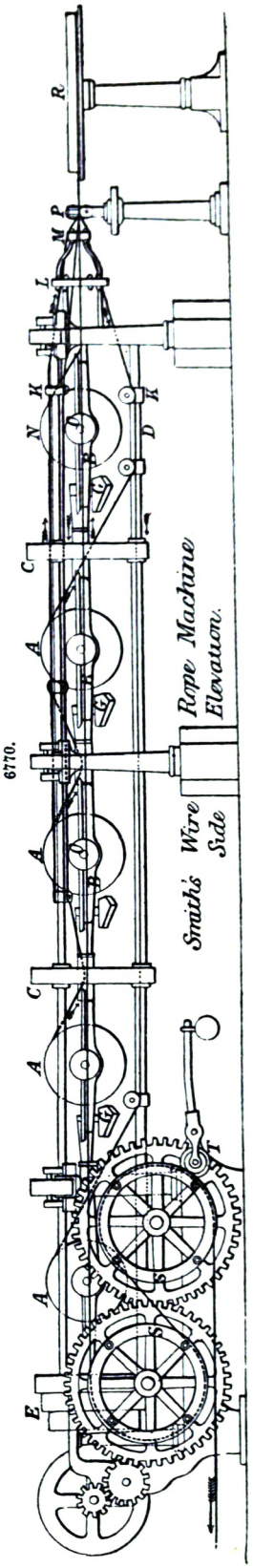
6770.
Rope Machine
Elevation.
Smith's Wire Side
R
P
M
L
K
N
D
C
A
B
T
E

length of the machine. Fig. 6771 a side elevation of one portion of the machine, to a larger scale and partly in section. Fig. 6772 is a transverse section, and Fig. 6773 an end elevation at the front end of the machine.

6771.

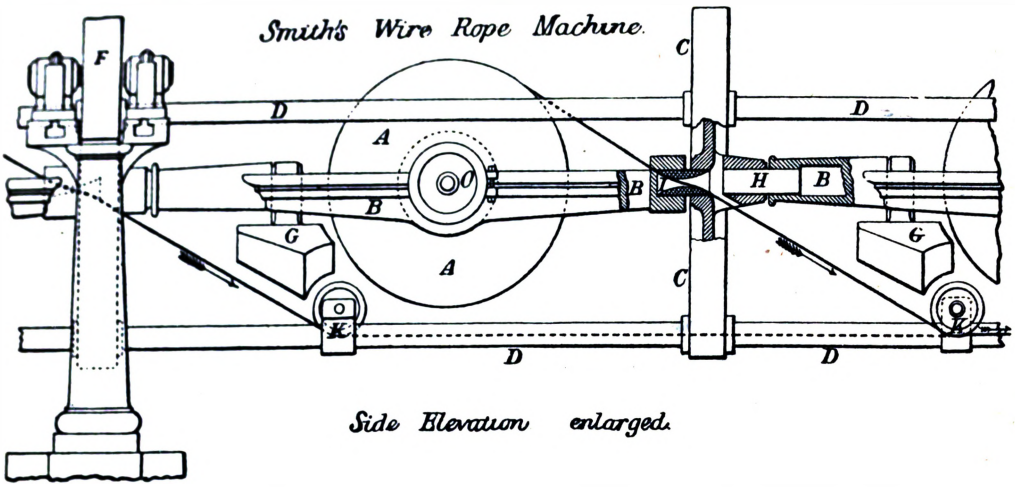

The bobbins A, A, Fig. 6770, are here all arranged in a horizontal line one behind another, in the axis of the revolving frame of the machine. The revolving frame is composed of a number of disc-wheels C, C, framed together by three long bolts D, Figs. 6771, 6772, passing through holes near the edges of the discs and through strong iron distance tubes with collars at each end, which are all turned accurately to one length. Eight discs C, C, Fig. 6770, are thus framed together by the three bolts, and separated by the distance tubes, forming seven compartments of the machine, each containing a bobbin of wire A. The last disc at the back end of the machine forms part of a three-speed cone-pulley E, by which the entire frame is made to revolve, being supported and steadied sideways at every alternate disc by the three rollers F, Fig. 6772. The bobbin-frames B, B, are centred in the revolving discs C, and have a weight G suspended from their under side, sufficient to overcome the friction of the bearings and prevent the bobbin-frames from revolving with the machine.

6772.

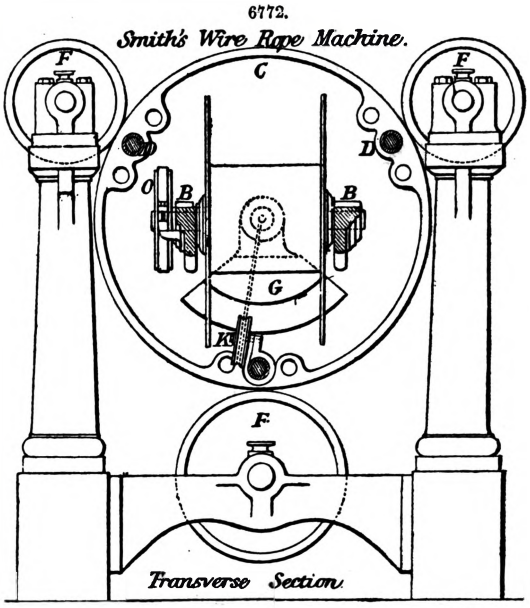

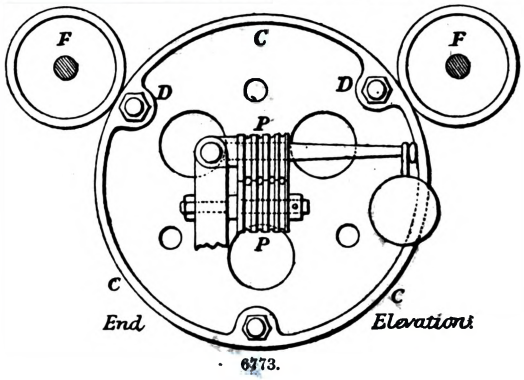

6773.

The front end of each bobbin-frame B, Fig. 6771, has a hollow steel stud or nipple I, carefully bell-mouthed; and the back end has a solid stud H. Each stud works in a boss cast on the disc C, having a clear hole right through the centre for the wire to pass through; and the boss on the front side of the disc has a large gap J, for the wire to pass out from the centre. The wire from each bobbin A, shown by the strong black line, is drawn off through the bell-mouthed stud I and the centre of the disc C, and is then taken round the leading pulley K, Figs. 6771, 6772, which is fixed on the framing bolt D for the purpose of enabling the wire to clear the bobbin in the next compartment. The wires pass through holes in the disc C on either side of the framing bolts D, as in Fig. 6772; and on reaching the front compartment of the machine, all the six wires from the six bobbins A, Fig. 6770, are led round three pairs of leading pulleys K, and thence through the holes in the front disc, Fig. 6773, through the laying plate L, Fig. 6770, and over the laying top M. The laying plate L is attached to the front disc of the machine, and has a slot in it for each wire to pass through. The laying top M fixed in front of the laying plate is simply a cast-iron block

with the required number of scores or grooves for the wires. The front bobbin N, Fig. 6770, in the first compartment of the machine, carries a seventh wire to form the core for the six external wires, which is led off through the centre of the front disc and through a hole in the centre of the laying plate L and laying tap M. The tension or temper of each of the seven wires is regulated to the exact amount required by a friction-brake O on the spindle of each bobbin, Fig. 6772. The bearings of the spindle in the bobbin-frame B are provided with spring caps, to facilitate changing the bobbins.

The six wires are all brought together at a point immediately in front of the laying top M, where they are all laid round the core by the revolution of the machine, the bobbins A remaining stationary with the exception of their unwinding motion as the wires are drawn off; each wire is thus laid into the strand free from twist in itself. The strand thus made passes between the nipping rollers P, Fig. 6773, which have a series of scores of different diameters to suit various sizes of strand or rope; the lower roller turns on a fixed stud, and the upper one on a weighted lever. The strand is then led half round the indicator sheave R, Fig. 6770, which has a counter attached to indicate the number of yards or fathoms made. Thence it passes backwards alongside the machine to the draw-off wheels S, S, at the back end; these are V grooved wheels of equal diameter, round which the strand passes in a figure of 8 course, being pressed tight into the groove of the second wheel by the tightening roller or jockey-wheel T, which prevents the strand from slipping from any accidental cause. The draw-off wheels S are driven from the driving pulley E by intermediate bevel-gearing, with a change-wheel by which the speed of the draw-off wheels is regulated in proportion to the speed of revolution of the machine, whereby the lay of the wires or pitch of the spiral in the strand is determined. The strand finally leaving the machine from the draw-off wheels is wound on a bobbin, ready to be placed in a second similar machine to be laid into rope. In this second machine the revolution of the laying apparatus is in the opposite direction, while that of the draw-off wheels is in the same direction as in the first machine, in order to make the lay of the strands in the rope contrary to that of the wires in each strand. From the second machine the rope is coiled on a reel, or in case of its being a long length it is sometimes coiled down direct into trucks for transportation.

In this machine, instead of the bobbins and bobbin-frames, which sometimes contain half a ton weight each, being carried round the common centre of the machine, sometimes describing a circle of 15 ft. diameter, and also rotating on the axes of the bobbin-frames once for every lay in the rope, the same result is attained without any motion being given to the bobbin-frames. This is an important advantage, because in course of working some of the bobbins are full while others are nearly empty, and in the case of the old machinery a great strain is thereby thrown on the parts of the machine from the variation in weight; while in the construction just described the equilibrium of the machine is never disturbed. In addition to this, great regularity of lay results from the wire being free to unwind, and from the absence of the extra tension that was necessary to prevent the wire being disturbed when rapidly carried round in the old machine. The stationary position of the bobbins enables the workmen to see what is going on, and no entanglement of the wire takes place, as is frequently the case in other machines.

ROTARY ENGINE. FR., *Rotatoire-machine;* GER., *Dreh-Maschine;* ITAL., *Macchina rotatoria;* SPAN., *Máquina rotatoria.*

See ENGINES, *Varieties of.*

SAFETY-VALVE. FR., *Soupape de sûreté;* GER., *Sicherheitsventil;* SPAN., *Valvola di sicurezza;* SPAN., *Válvula de seguridad.*

See DETAILS OF ENGINES.

SAW. FR., *Scie;* GER., *Säge;* ITAL., *Sega;* SPAN., *Sierra.*

See WOOD-WORKING MACHINERY.

SCAFFOLDING. FR., *Echafaudage;* GER., *Rüstung;* ITAL., *Ponte, Castello;* SPAN., *Andamiaje.*

Scaffolds, Staging, and Gantries.—A scaffold as used in building is a temporary structure supporting a platform, by means of which the workmen and their materials are brought within reach of the work.

The most common form of scaffold is that used by the bricklayer. It consists of poles, usually of fir, from 25 to 40 ft. in length, and from 6 to 8 in. in diameter at the butt or larger ends. These poles, which are called standards, are planted in a row at intervals of 10 or 12 ft., and at a distance from the wall to be erected of about 5 ft. in the clear. To the standards on the sides next the wall other poles called ledgers, placed horizontally, are lashed with ropes as the work proceeds, at intervals of about 5 ft. in height. These support the putlogs, which are pieces of squared timber about 6 ft. long, and from 4 in. by 3 in. to 4 in. by 3½ in. in scantling. The putlogs are supported at one end on the ledgers and the other on the wall, a header or half-brick being left out for the purpose in building. Putlogs are usually placed at about 3½ or 4 ft. apart. On them are laid the scaffold boards, which are about 9 in. wide by 1½ in. thick. It is on these scaffold boards that the workmen stand, and the bricks and mortar are deposited. Fig. 6774 shows the arrangement of a bricklayer's scaffold. When the scaffold has to be carried to a considerable height other poles are lashed to the standards with ropes tightened by wedges. Poles are also lashed diagonally across every three or four standards in the shape of a St. Andrew's cross; these are called braces, and they serve to stiffen or brace the scaffold longitudinally.

In buildings which do not admit of putlog-holes in the walls, as where rubble stone or ashlar facing is used, and which do not require heavy machinery for hoisting, or strong timbers in the scaffold, two rows of standards with ledgers are used, one row being close to the wall, and the other at the usual distance, so that both ends of the putlogs may rest on the ledgers. Scaffolds such as we have just described are sometimes used for heights of 90 or 100 ft. from the ground, as in building church steeples and similar work. In the erection of houses it is usual to construct a staging about 10 ft. square on the outside of the scaffolding, for the purpose of hoisting materials, and from which they are distributed for use. This staging is usually formed with standards and

ledgers in the same manner as the scaffold to which it is connected. In the erection of large works in masonry, the materials used being blocks of stone, frequently weighing several tons, it is obvious that a different arrangement is required from that where the materials can be lifted and set by the hands of the workmen, as in the case of bricks and the small stones used in rubble-work. The mason therefore uses, instead of a scaffold formed of round poles, one of squared timbers of large scantling, which being too large to be lashed with ropes, are fastened together by bolts and dog-irons, and are kept quite independent of the walls, putlog-holes as used in brickwork being inadmissible.

6774.

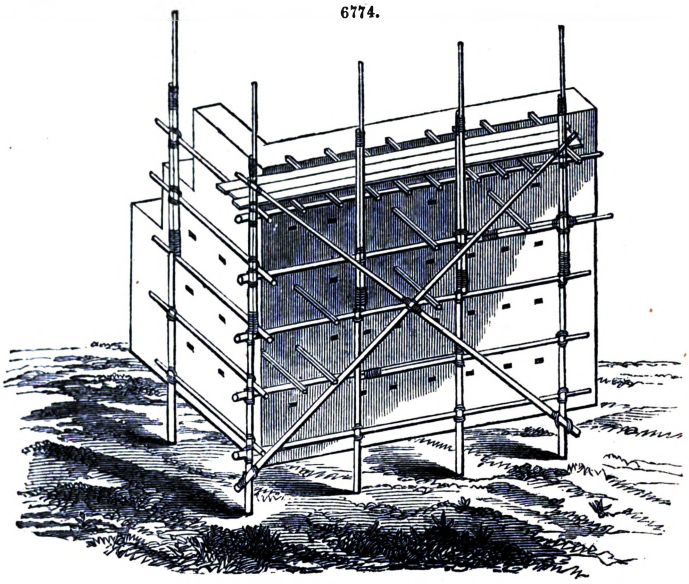

The standards were formerly planted in two rows, one being next to the wall, and a boarded platform was carried on the top similar to the bricklayer's scaffold, the heavy stones being hoisted and set by means of shears with blocks and tackle. This method is now almost superseded in large works by a staging formed of squared timbers, in the same manner as the mason's scaffold, but with only one row of standards on each side of the wall. On these standards are laid the longitudinal timbers, which usually carry a line of rails on which a travelling platform containing the hoisting gear can move over the entire extent of the building. The standards and longitudinal timbers are made perfectly rigid by struts, disposed as in Fig. 6775, which is a front view of one tier of the outer row of timbers.

The standards A, A, are in scantling usually from 8 to 12 in. square, according to the height of the scaffold and the weight to be supported. The distance apart is from 10 to 20 ft. Corbel or cap-pieces B, B, are placed under the longitudinal timbers or runners C, C, to give the latter a better bearing on the heads of the standards. The runners C, C, are usually of the same scantling as the standards; but the struts D, D, are seldom more than one-half the sectional area of the standards. These struts usually pitch against a straining piece E, which is bolted to the under side of the runners. The lower ends of the struts rest on cleats, and are secured to the sides of the standards either by iron spikes or bolts. It is desirable to have as few bolt-holes as possible, and to avoid notching, mortising, or otherwise cutting into the timber, so that the deterioration in value at the completion of the work may be as little as possible. Therefore the several pieces are for the most part put together with dog-irons, which are pieces of square or round iron about $\frac{3}{4}$ in. in diameter, having the ends pointed and turned down at right angles. These are driven into the wood, and can be removed with little or no injury to it afterwards.

The distance at which each row of standards should be placed from the wall will depend upon the general arrangement for conducting the works. In some cases a tramway leading from the quarry or stone depôt is laid between the outer row of standards and the wall to admit of the stone being lifted directly from the truck on to the work. In this case a space of from 10 to 20 ft. would be required between the standards and the wall. In other cases, as in the streets of towns, or where the space is limited, the timbers are placed within a few feet of the wall on both sides, and the materials are lifted at some convenient part of the work, over which the traveller with its hoisting gear can be brought. Fig. 6776 shows a section of a wall in progress with the travelling platform resting on the staging.

To prevent lateral movement in the staging, struts from the ground, as F, Fig. 6776, are usually fixed to each standard. The lower ends of the struts should always be fixed to foot-blocks, as at G, by which they are prevented from sinking into the ground. A short pile should be driven at the outer end of the foot-block, which will prevent it from slipping. The usual practice, however, is that shown by Fig. 6777, in which the foot-block is sunk in the ground at right angles to the direction of the strut. The choice of these methods will depend on the nature of the ground. Sometimes the ends of the standards are framed with a short or stub tenon into a continuous sill of timber placed on the surface of the ground; this prevents the unequal settlement of the standards, which would be fatal to the stability of the staging.

In the foregoing description the staging is supposed to be in one tier only; but in buildings which have to be carried to a great height the staging will require to be raised accordingly. This is usually accomplished by placing a beam of timber across the head of each standard, and projecting some 9 or 10 ft. beyond it at right angles to the direction of the runners on which it is made to rest, as I, I, Fig. 6777. This piece, which is called a footing piece, serves the same purpose as the foot-block G, Fig. 6776; but instead of resting on the ground, it is supported by the struts H, H, Fig. 6777. These struts are usually in two pieces in order that the struts F, F, may pass between them.

The standards of the upper tiers should always be placed directly over those of the lower tiers to prevent cross strains on the horizontal timbers. Figs. 6777, 6778, show the principle generally

adopted for staging of this kind, the upper tier being usually braced by diagonal braces, as shown in Fig. 6778.

6775.

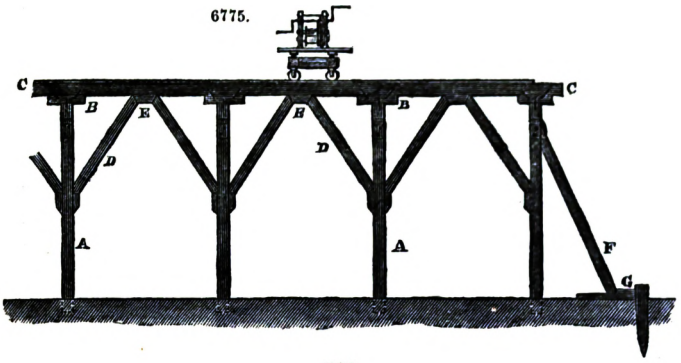

6777.

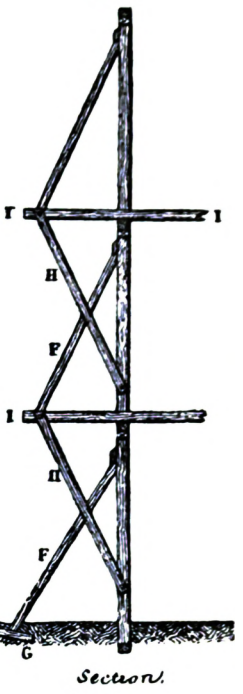

Section.

6776.

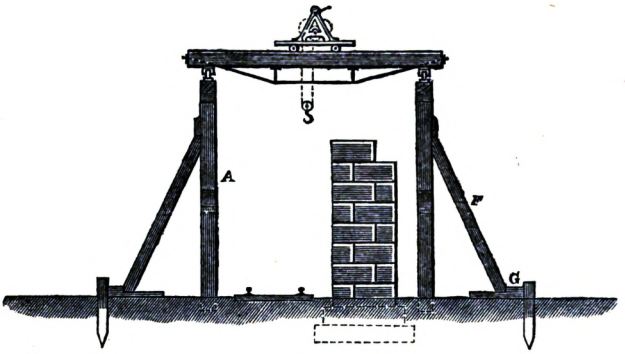

6778.

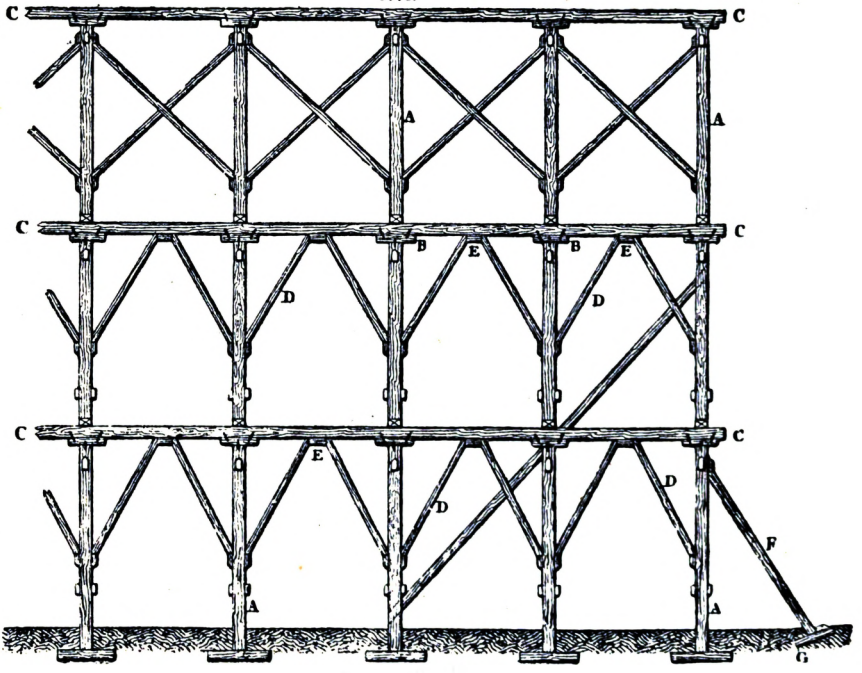

Elevation.

The term gantry is frequently applied to a structure of timber, such as we have described; but properly a gantry is a staging which carries a traveller only, as that shown by Figs. 6775, 6776.

Fig. 6779 is a transverse section showing the arrangement of the timbers of a staging as used in the construction of bridges and viaducts. The width should be from 10 to 20 ft. more than the width of the bridge, and the height of the staging is usually about the same as the springing line of the

arch. A line of rails is generally laid on each side to admit of a traveller called a Wellington, which is similar to that shown by Fig. 6776, but with the addition of legs to make it clear the upper portion of the structure over which it passes. By means of this traveller all materials, whatever their weight may be, can be hoisted from the ground with the greatest facility, and deposited in the position they are to occupy in the work. In brick arches or those of rubble stone such a traveller would not be required.

In viaducts of great height a staging, as Fig. 6779, is also used to support the centering, or in those formed of iron the girders are put together on it. That used in constructing the land tubes of the Britannia Bridge in 1850 was similar in principle to the staging shown by Fig. 6779. When the arches are of considerable span, two or more of the frames shown by Fig. 6779 are required for each arch; they are connected by longitudinal timbers or runners, on which the rails are laid strutted, Fig. 6775; or when the distance between the supports is great, wrought-iron tie-rods are used as for purlins. Where centering has not to be supported, or in an iron bridge where the girders are not put together in position, a simple gantry, Figs. 6777, 6778, to carry a traveller is all that is required.

6779.

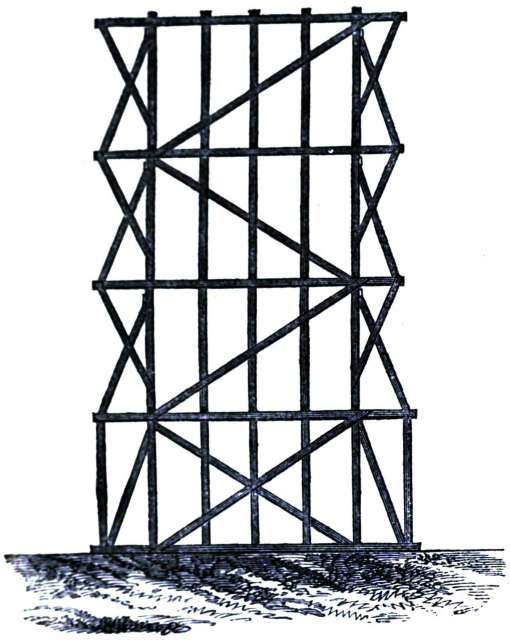

6780.

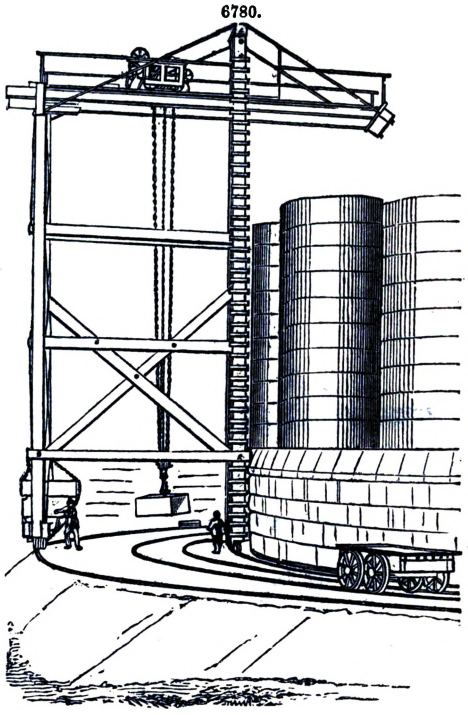

The scaffolding used in the erection of domes and roofs of considerable span, as those for large railway stations, is nothing more than a series of standards with longitudinal timbers, and a platform on the top with diagonal braces and struts between the standards, similar to that shown by Fig. 6779. The arrangement or plan will of course vary according to the shape and extent of the building. Whole timbers are generally used for both standards, and runners and half-timbers for the struts and braces. The platform is usually formed of planks 3 in. in thickness.

Fig. 6780 represents the movable scaffolding and its circular track, constructed by H. Lee and Sons, and employed in building Garrison Point Fort, Sheerness. This traveller is 46 ft. high from rail to rail; the tramway or track is of the ordinary kind employed for stone travel; extreme width 18 ft., length of sill 24 ft. The crane is the ordinary travelling crane used by masons and contractors; the transverse carriage and crab are arranged in the usual manner. The economy of manual labour in working cranes is a subject of much importance to the builder and contractor, especially for heavy works, and much attention has been given to this subject. Steam power has been long employed for the lifting and removal of heavy weights, and the amount of labour saved by the steam travelling crane, compared with the ordinary hand-labour machine, is considerable. In many of our modern engineering operations scaffolding has to be constructed to support a small steam-engine and boiler as well as the crane and materials to be moved; for it is often found convenient to have a steam-engine and boiler with the driving gear supported upon the platform at one extremity of the transverse carriage, being fixed thereto, and travelling with it, in a longitudinal direction, whenever so required. In this way the steam power travels with the traversing carriage, and does not require any longitudinal shafts or bearings, which is the case when a fixed engine is employed, the lubrication and friction of the longitudinal shafting being also saved.

Figs. 6781, 6782, show a sketch of the staging used by the contractors, Lee and Sons, in the construction of the Admiralty Pier at Dover, in a depth of water of over 60 ft. at high spring-tides. This staging carried a pair of travellers on rails 37 ft. 10 in. apart, and also two tramways of 4 ft. 10 in. gauge for the trollies which carried the materials to run on, one being on each side of the travellers.

The staging was supported on three rows of piles, from 17 to 20 in. diameter, and about 90 ft.

long, but with one splice in each pile above the high-water level. The splices were made good with wrought-iron bands and straps. The piles were shod with iron, and driven into the ground at intervals of 25 ft. from centre to centre, and the distance between each row was about 41 ft.

The transverse beams, which were of whole timbers, were in two thicknesses, one above the other, and were secured to the heads of the piles by iron sockets bolted on. Over the transverse beams were laid the runners; those for the traveller rails were formed of two whole balks placed side by side. The tramways were supported by single balks of the same size. A footway about 4 ft. 6 in. in the clear was formed in the middle of the stage by planking over the space between the runners of the adjoining traveller ways.

As the staging was liable at times to the wash of a very heavy sea, it was the object of the contractors to construct it so as to offer as little obstruction to the waves as possible, therefore the ties and braces were all made of wrought iron, as shown by the thick black lines

6781.

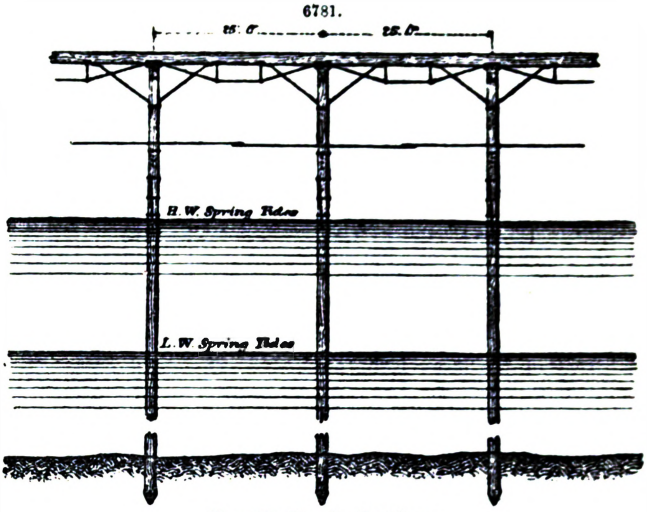

Longitudinal Section.

6782.

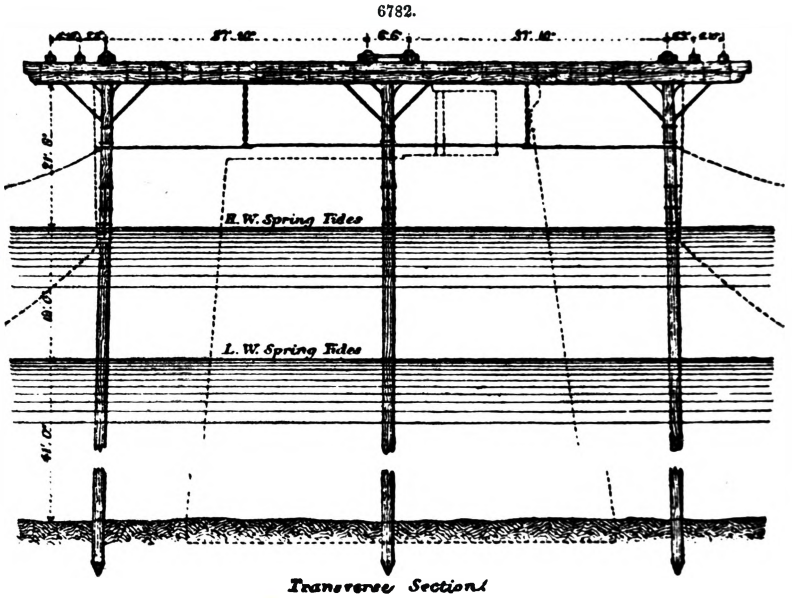

Transverse Section.

in the drawing, and the piles were rounded with the same object. From the great length of the piles under water it was difficult to introduce efficient bracing, consequently to each pile of the outside rows a pair of mooring chains were attached and anchored in the sea, one at a distance of about 490 ft. from the foot of the pile, and the other at about 290 ft.

It is rarely that we find a staging erected in such deep water, and it reflects much credit on the skill of the contractors who carried it out.

SCREW ENGINES.

The chief difference between marine engines adapted to drive paddle-wheels, and those suited for giving motion to the screw is, that in the latter case the engines are direct acting, whilst in the former they are not always direct acting, but the motion is conveyed through the intervention of side levers.

The overhead arrangement of the cylinders, Figs. 6783, 6784, is very common with screw engines built in the north of England, and any variation in their design and position is usually due to the particular variety of condenser adopted.

Figs. 6783, 6784, represent a pair of engines with injection-condensers. The cylinders are supported on standards similar to a girder. The slide-valves are between the cylinders, but ample space is allowed for necessary inspection. The supply steam pipe is attached to the casing at

the side, the exhaust-pipe being situated opposite. This latter pipe forms two separate connections at the top, with a single connection at the end secured to the condenser. The expansion and contraction of this pipe is effected by the stuffing box seen on the condenser. The air-pumps and valve-chambers are secured beyond the condenser. Motion is imparted by levers connected at the one end to links on each side of the connecting-rod pin; the other end being in like manner secured to the cross-head which is connected direct to the air, feed, and bilge pumps' rods.

6783.

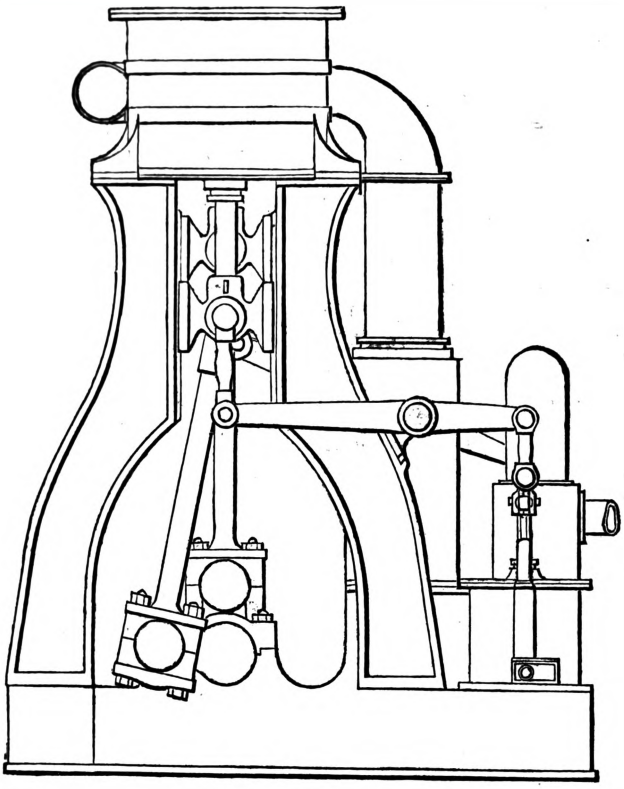

Side guides are sometimes used for the pump cross-head, but are not always used with short strokes and stiff gear. The injection-valve is secured below the exhaust steam pipe, between the condenser and the air-vessel, the latter being on the discharge-chamber. The final discharge-water pipe is secured to the outside of the chamber, and from thence to the ship's side. The guide-blocks for the engine piston-rods are of the ordinary kind, with flat surfaces and adjusting pieces. The connecting rod is of the usual type and connection. The base or lower framing is similar to box-girder in section, also forming a portion of the condenser and valve-chambers at the side. The valve link motion is between the engines. The means for starting, stopping, and reversing, are attained by a hand-wheel, worm, pinion, and levers. The cranks and shaft are in one forging, the bearings being fitted with adjustable brasses.

6784.

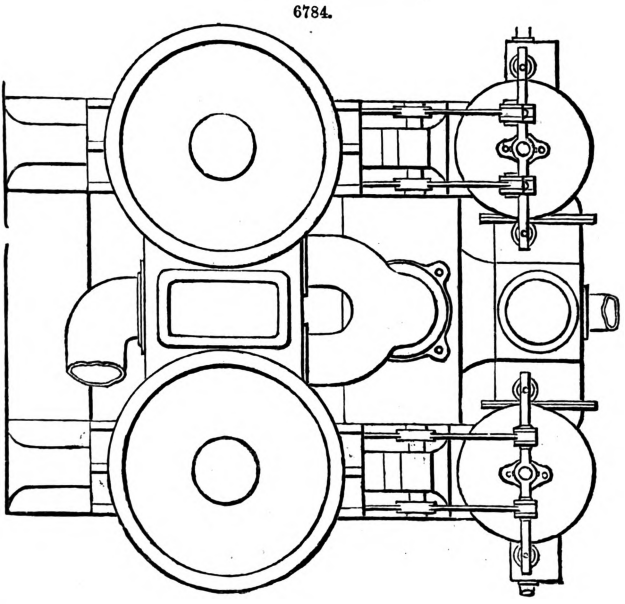

Double Trunk-engines.—The object to be attained by trunk-engines is compactness of arrangement, with free space above the cylinders and condensers.

Figs. 6785, 6786, represent an arrangement of double trunk-cylinder screw engines by J. Penn and Son.

The cylinders are secured together on one side of the centre of the hull of the vessel. The trunks are double, that is, one trunk on each side of the piston passes direct through the front and back ends of the cylinders. The cross-head pin is connected by bolts and nuts passing through projections cast on the piston and front trunk, the back trunk being a separate casting, and secured by studs and nuts. The connecting rods are of the ordinary single-end kind, adjusted by securing bolts and nuts. The main frames are of cast iron, the caps of which are secured in a line with that of the cylinder. The cranks are counterbalanced by weights secured to the back of each, thus producing a uniform motion.

The slide-valve adopted by J. Penn and Son is the equilibrium double-ported. The friction is here greatly mitigated by a recess in the back of the valve, which encloses a ring and packing, the outer side of the ring bearing against the cover of the casing, and thus excludes the full area of the valve from being exposed to the action of the steam.

The mode of imparting the motion to the valve is by the ordinary slotted links and eccentrics. The valve-rod—when one is used—is guided beyond the casing by a guide-box secured to the main framing. When two rods are adopted, a cross-head connects them. The guides are above

and below the rods, the former being secured to the casing, thus dispensing with the guide connection with the main frame.

6785.

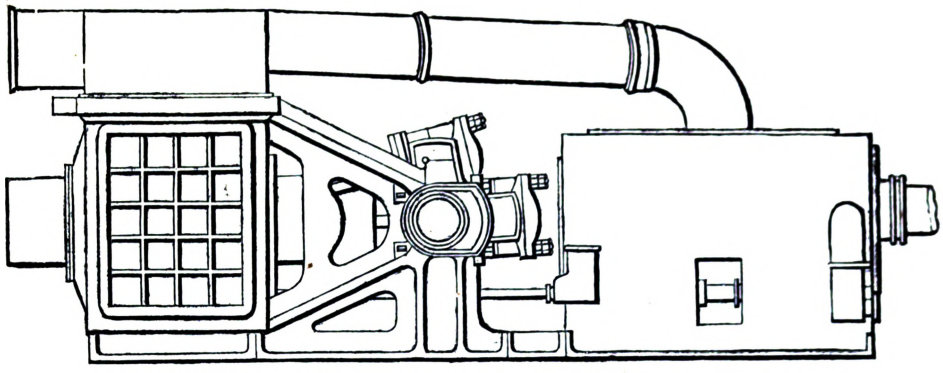

6786.

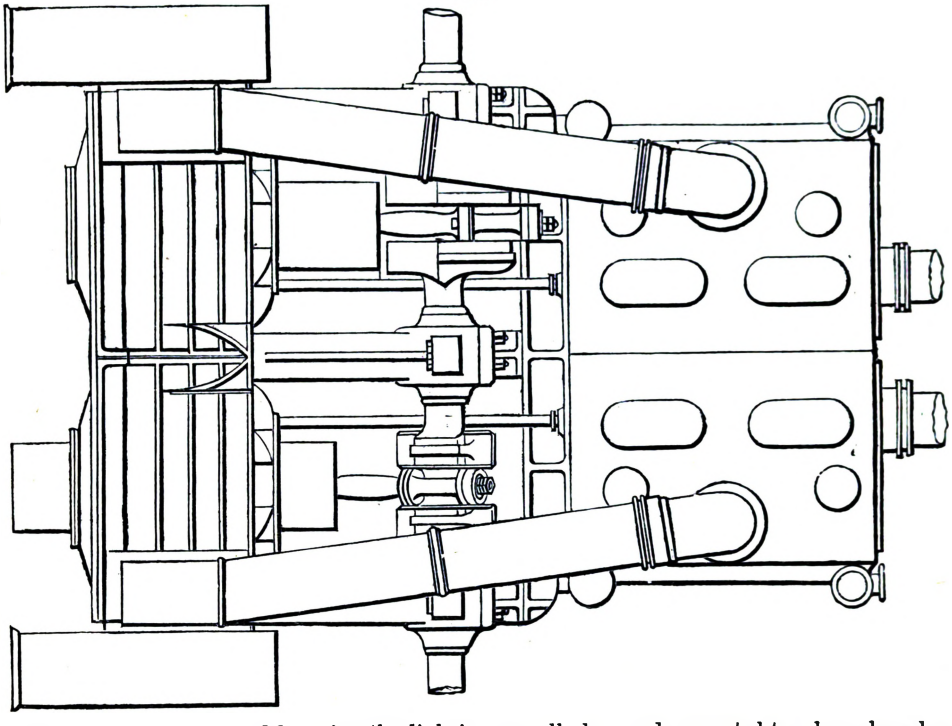

The mode of raising and lowering the link is generally by a rod connected to a lever keyed on a shaft; on this shaft is secured a quadrant gearing with a worm, the latter forming a portion of, or keyed on, the starting-wheel shaft. The connection of the lifting rod with the link is central, the firm seeming to prefer this to any other position.

The mode of reversing is as follows;—Mitre-gearing on the wheel-shaft imparts motion to a rotatory box encompassing a perpendicular screwed rod, the lower end of the latter being connected to a lever counterbalanced at its outer extremity. A rod attached to this lever connects it with the link, and thus any motion imparted to the screwed rod is transmitted to the link.

The supply steam is admitted to the slide-valve casings through a separate bonnet or casing containing the expansion-valve. The exhaust steam passes through separate pipes leading from the cylinder to the condensers. The latter is so arranged that the condensing and discharge chambers for each engine are in separate castings, connected at the centre by bolts and nuts. The condensers are at the outer sides of this arrangement, or fore and aft of the hull; the discharge-chambers being placed in the middle. The suction and delivery valves are on the same level, above the barrels of the pumps. The feed and bilge pump barrels are cast with the condensing chambers. The valves are attached in suitable boxes, secured to the exterior of the chambers forming the sides. Motion to all the pumps is imparted by rods directly connected from the steam-pistons to the several pistons and plungers. The injection-valves are secured at the side of each condenser, opposite or beyond each exhaust steam pipe.

Return-acting Trunk-engines.—Figs. 6787, 6788, are of the return-acting trunk air-pump screw engine of R. Napier and Sons, Glasgow. The cylinders are attached together on the same side of

the crank-shaft, and the slide-valves are situated at the side of each cylinder fore and aft; the valve adopted being the equilibrium double-ported arrangement, packed at the back with the ordinary

6787.

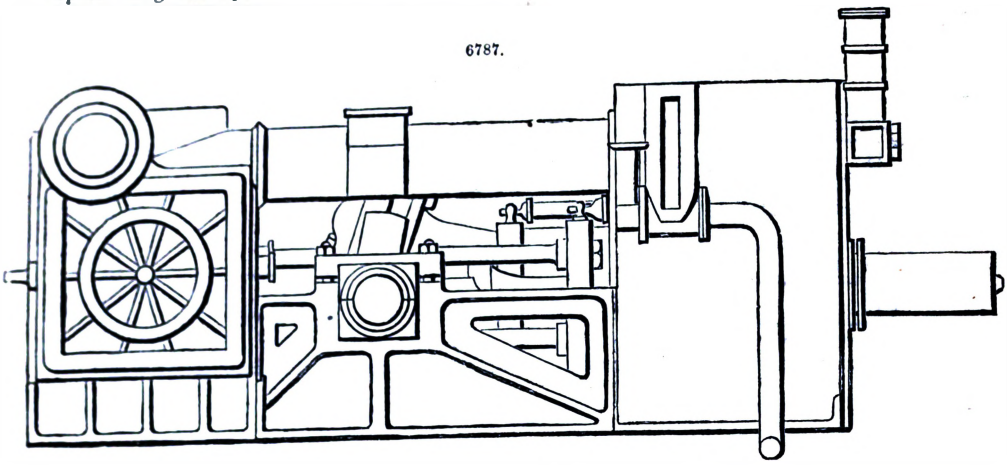

6788.

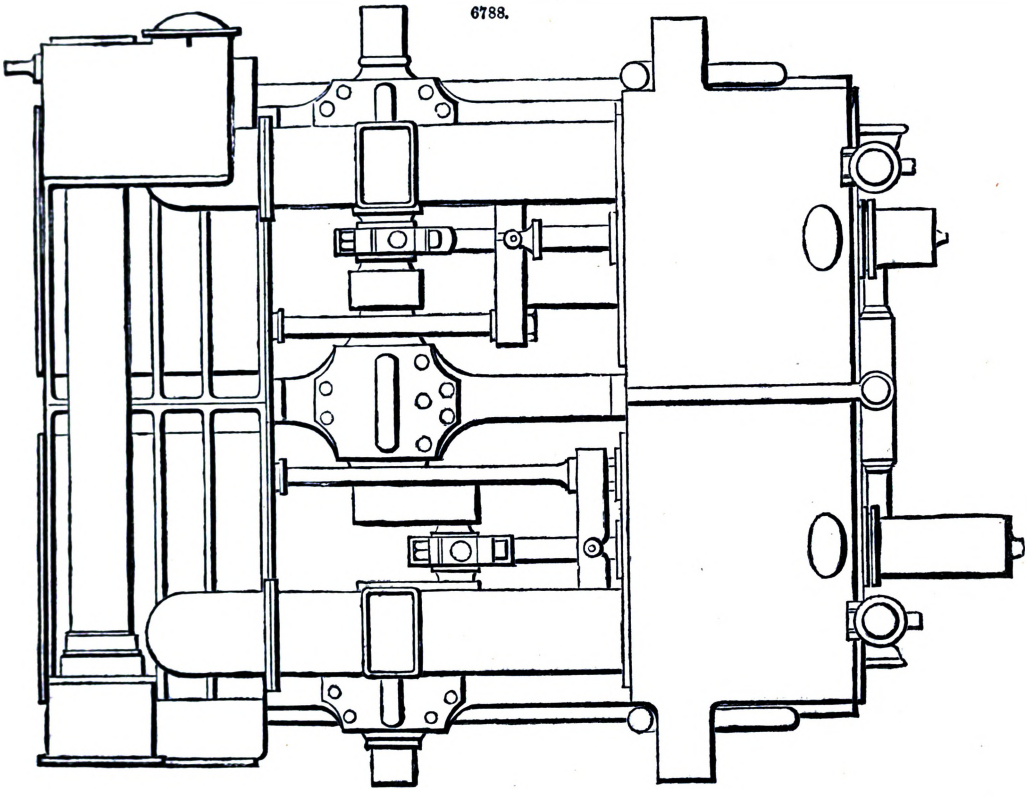

ring, spring, adjusting studs and nuts. The centre of the valve-rod, unlike most examples by other makers, is above that of the crank-shaft. The motion—for the valve—is imparted by the ordinary slotted link, eccentric rods, and so on. The position of the link is at the side of the condensers. The gear for starting, stopping, and reversing is a screwed rod with a sliding block encompassing it, motion from the hand-wheel shaft being transmitted by mitre-gearing. The back portion of the sliding block—on the rod—is fitted into a guide secured to the side of the condenser, to prevent lateral disarrangement. There are two hand-wheels, one on each side of the condenser, keyed on the weigh-shaft, which latter is supported on the condenser passing across the top.

By this particular position of the starting gear a maximum length of eccentric rod is attained, while the cylinders are secured as near the crank-shaft as the length of the stroke of the piston will admit.

The injection-condensers are fitted with single-acting pumps, so arranged that the steam enters the condensing chamber at the front end from the top, and the chamber extends midway above the

top of the pump. Channels are formed on each side of the air-pump barrel for the reception of the suction-valves, which are inverted to ensure a perfect drainage of the condensed steam. The discharge-valves are secured directly over those for the suction; and as the bottom of the discharge-chamber is on a level with the top of the pump-barrel, a thorough discharge of both *air* and water is effected, transversely for the entire width of the disposition. The injection-water falls through a perforated plate.

The plunger or trunk is a cylinder, closed at the back end, and the adjustment of the connecting rod is thus effected;—At the back, or within the end of the trunk, is secured a single eye fixed within a small cylinder, termed the adjusting tube, forming a portion of the trunk, projecting it a distance from, and equal to the length of the stroke of the engine. The securing end of the single eye is bored throughout its length to admit a rod, the end of which acts against the inside brass. Adjustment is attained by the outer end of the rod being connected to the extremity of the adjusting tube. The connecting rod is forked at the trunk end. The connection with the crank-pin is effected by securing bolts, brasses, and stop-pins of the ordinary kind.

The supply steam enters the top valve-casing secured on the slide-valve casing of the engine nearest the boiler. The expansion-valves are so situated to be instantaneously effective. The feed and bilge pumps derive their motion from the plunger or trunk of the air-pump; and their valves and boxes are at the back of the discharge-chamber, fitted with the suitable springs and adjustable connections. The shifting valves are secured at the back of each air-pump; underneath the latter is a passage from the condenser, by which a certain drain is secured. The injection-valves are at the side of each condenser, near the starting wheel, thus ensuring ready manipulation, without inconvenience; the cylinders are fitted with the necessary relief and blow-through valves; and lubricators are fixed at each end of the cylinder.

Single Piston-rod Engines, by Humphrys and Tennant, Fig. 6789.—The cylinders are here

6789.

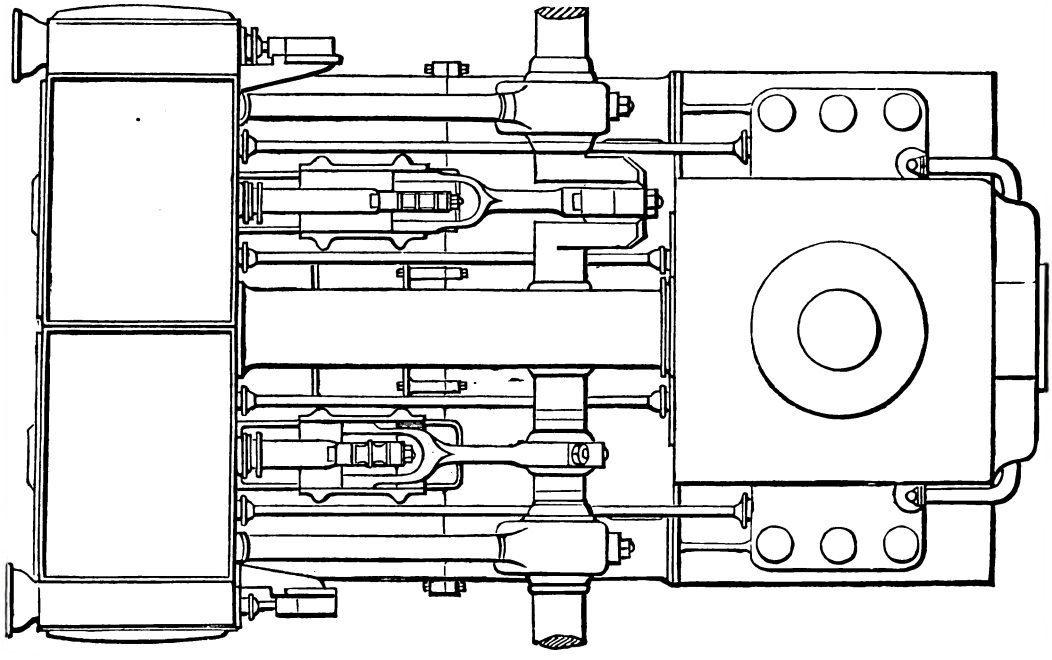

secured together on one side of the crank-shaft, and have double-ported equilibrium slide-valves, packed at the back with a ring and gasket. The pistons are cast hollow, with ribs to retain the requisite strength while under pressure. The piston-rod is secured by a nut at the back of the piston. The stuffing box is the ordinary kind; the gland being adjusted by studs and nuts. The lubrication of the piston-rod is maintained by an oil cup, or channel, encompassing the rod beyond the packing gland, forming a part of the bush in the latter. In order to prevent the oil wasting by the motion of the piston-rod, a stuffing box and gland is placed beyond the oil-chamber, and thus economy of lubrication is ensured. The form of the piston-rod at the connection with the guide-block is similar to the letter ⊣ on its side.

The guide-block for the piston-rod is in halves, each portion being almost a duplicate of the other. At the under side of the block, below the piston-rod, flanges are cast; and underneath these is arranged a plain surface, termed the slipper or shoe. The line of contact of the slipper and the block is at an angle; thus it can always be adjusted by a stud and nut used for that purpose. The section of the guide-channel is of a double bracket, the under side being connected. The connecting rod is of a forked form clasping the sides of the block; the pin, forming the attachment, being situated in the centre of the block. The whole is adjusted by securing-bolts over and under the block-pin; the strains imposed on these bolts are, of course, equivalent to that exerted on and against the piston-rod, therefore the areas are equal. The nuts of the securing-bolts are prevented from coming loose by stop-rings, pins, and outside keys. The crank end of the connecting rod is

semi-solid, adjusted by securing-bolts, similar to those for the guide-block. The brasses are circular, retained by their contact with the securing-bolts, and thus angular seats are obviated. Suitable flanges prevent lateral movement, and lubrication is obtained by the wiper and suspended can, as for the guide-pin. The cranks and shaft are in one forging, of plain exterior, consistent with uniformity and strength.

The main frames next claim attention. The main frames are of cast iron, forming at the base, between the cylinders and crank-shaft, a floor that is connected to the condenser in the centre of each bearing.

The guide-channel for the guide-block is secured by studs and nuts, being a separate casting. Between the guide-channel projection and the supports for the crank-shaft a transverse connection of the framing throughout is introduced, in order to ensure a perfect casting. The brasses in the main supports are the ordinary kind, adjusted with securing-bolts and nuts. It will be noticed that the frames between the cylinders and the crank-shaft supports are raised proportionately to the preceding examples, but very slightly from the base line, at the connections with the cylinders and the condensers. In order to resist the direct strain above the centre of the crank-shaft, a stay is secured between each frame to support the front of the cylinders, and by that connection the requisite resistance against the side strains is obtained. Each of the main bearings is provided with oil-chambers and water-tubes—the latter being required only in the case of heated bearings.

Return Connecting-rod Screw Engines, by Maudslay, Sons, and Field, Figs. 6790, 6791.—The cylin-

6790.

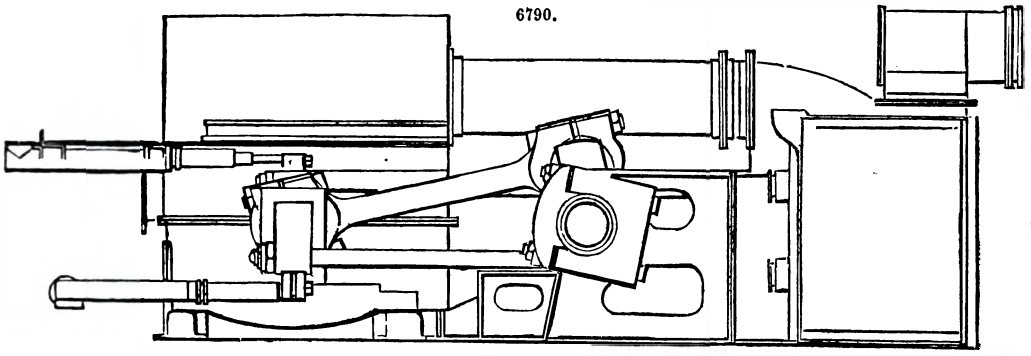

6791.

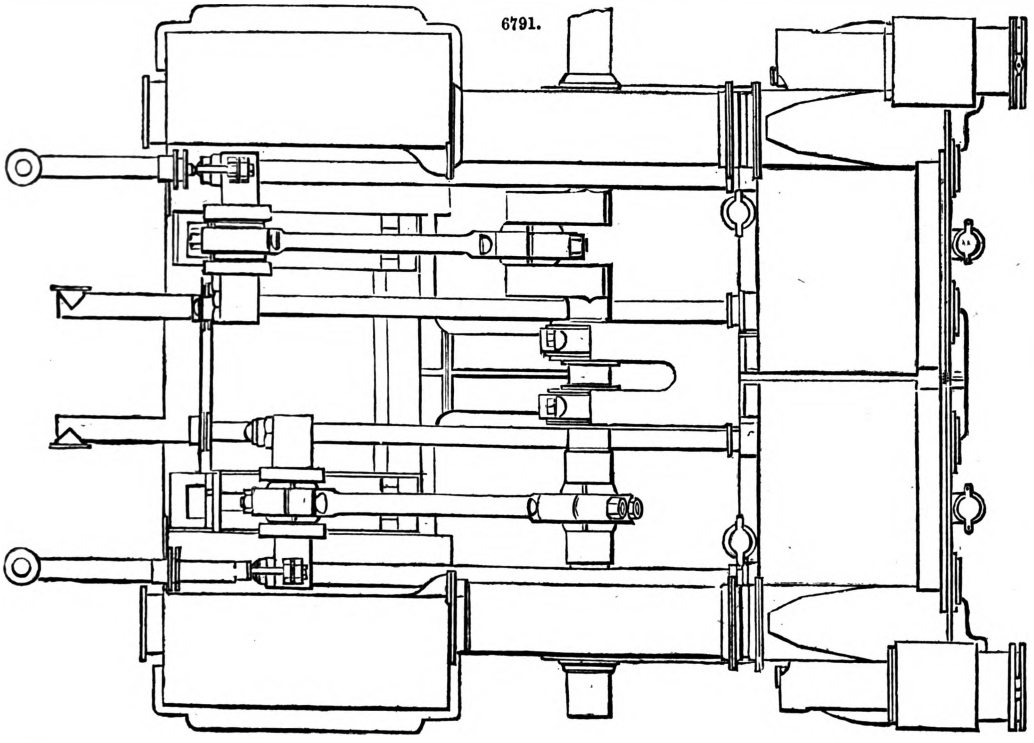

ders are secured together opposite the condensers, each pair being situated at the port and starboard sides of the keel of the hull. They are fitted with double-ported equilibrium slide-valves, the packing at the back being of the ordinary kind, and having a communication from the condenser, which assists to reduce the face friction. The supply steam enters the slide-casing through that for the expansion-valve, the latter casing being on the top of the former. Each casing is separately supplied with steam, so that an independent action is preserved.

In order to preserve a direct action from the eccentric, the slotted link is arranged to rest on the

block-pin when the link is lowered. With slide-valves of maximum area, two rods are introduced, each of which is fixed by nuts to a cross-head; and bracket bushes, secured to the main frame, form guides, through which the slide-rods pass. The link block-pin is secured to the cross-head at the back to retain a certain length of eccentric rod.

For raising and lowering the link, below the link, in the centre of the length of the main frames, is a weigh-shaft. On this is fixed a double lever, to which at one extremity is hung a counter-balance, and the other is connected to a vertical rod. This rod is attached at the upper end to a coarsely-pitched screwed rod, which passes through or fits in a bush supported in a standard, the latter being secured on the slide-valve casing. The bush forms part of a mitre-pinion, which gears with another pinion fixed on the hand-wheel shaft. On motion being imparted to the mitre-gearing, the double lever, by its connection with the screw, will be raised and lowered. The connection of the lever with the link is by a rod, the latter being attached to the centre of the length of the link at the one end, and to the lever by a slot and pin at the other. By this connection an almost equal action is imparted to the slide-valve, whether the link is raised or lowered. The position of the starting platform is between the condensers, each engine having separate starting gear.

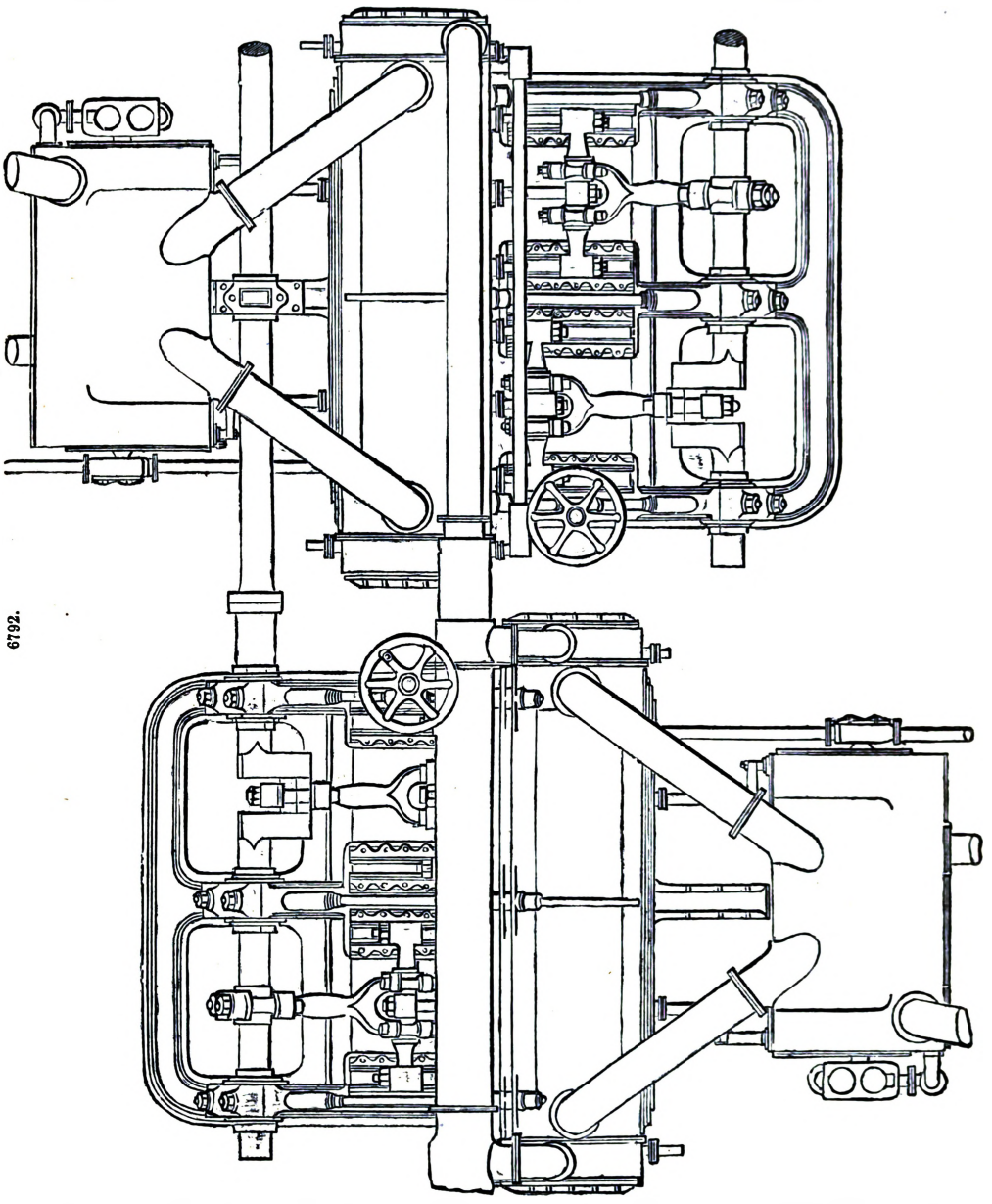

6792.

The hand-wheels are situated directly over the connecting rods, about midway of the length of the guide-channels; the other manipulating gear being close at hand.

The main brasses are fitted with caps, bolts, and nuts. It will be noticed that the centre frame has a double bearing, the central space being provided for the spur-wheel which imparts motion to the expansion-valves. The crank-shaft is in one forging; the connecting rods are singly connected

at each end with semi-solid heads and caps, adjusted by securing-bolts and nuts, and having suitable oil-cans and wipers for lubrication.

Fig. 6792 is the plan of an arrangement of single piston-rod direct-acting engines by J. and W. Dudgeon. Each arrangement is separate, without any connection of the working portions. The cylinders are the compound kind; the high pressure within the low. Three piston-rods are required for each engine, the centre rod being connected to the high-pressure piston. The guide-channels—below each piston-rod, connected to the annular piston—are the ordinary kind, arranged to receive slipper-blocks. The cross-head is secured to the piston-rod by nuts, and turned on each side of the central connection to receive the forked end of the connecting rod, which is of the T-end kind, with flat brasses, caps, and securing-bolts. The main frame, crank-shaft supports, and the connecting portions are in one casting, secured at the back and to the steam-cylinders. The brasses for the main bearings are adjusted, at an angle, by the ordinary securing-bolts and caps. The slide-valves are double-ported, to supply and exhaust the steam simultaneously from the respective cylinders, one valve only being requisite to each engine. The larger cylinder is double-ported on each side of the exhaust-port, and the passages, at the back and front end, communicate with the high-pressure cylinder.

6793.

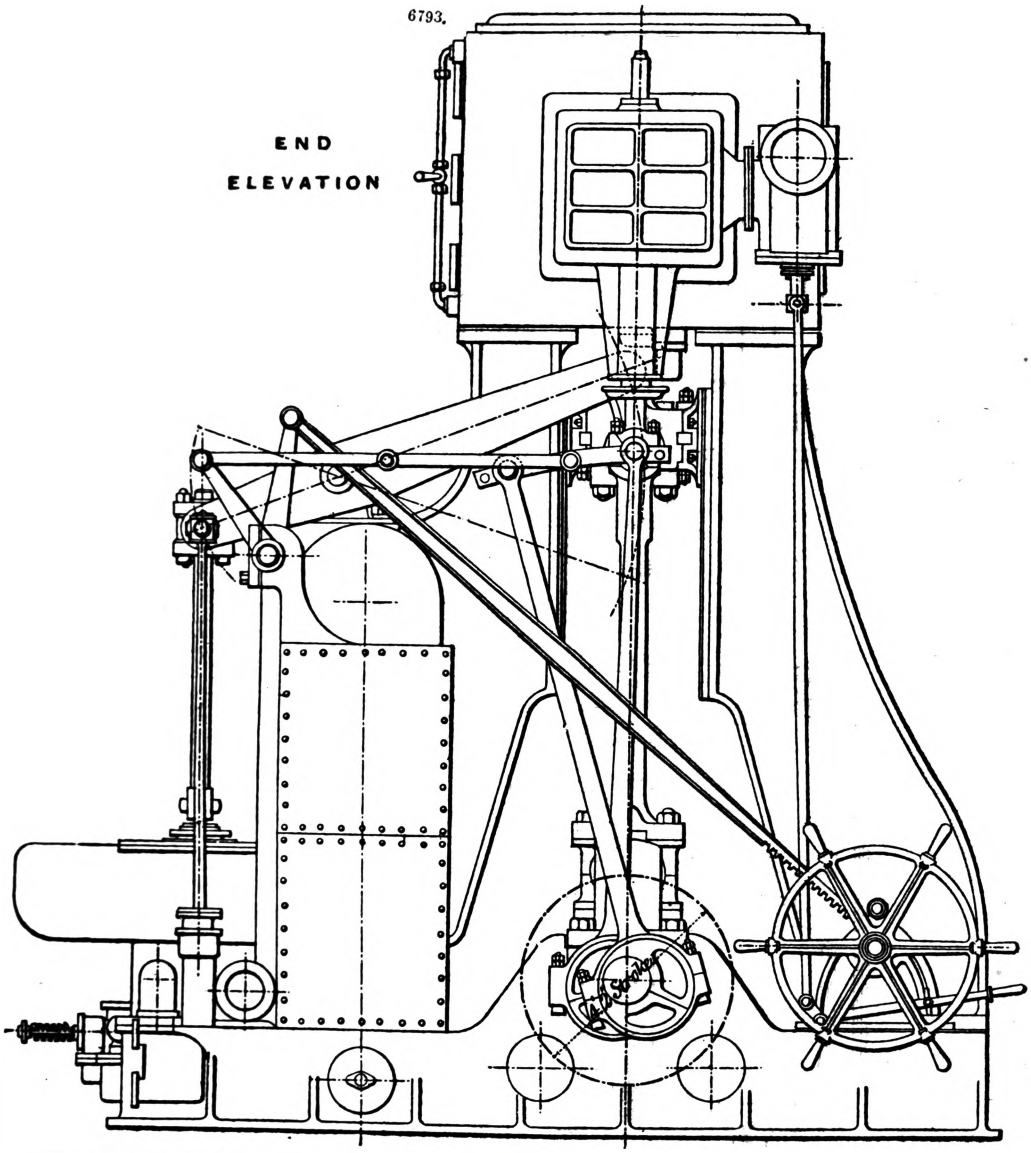

The link is two solid bars, connected transversely at the extremities. The block is inserted in a single eye, which forms the extremity of the valve-rod. Each bar of the link clasps the block, suitable recesses being formed for that purpose. The eccentric rods are connected to the outsides of each bar, and secured by separate pins. The lifting rod is connected, at the lower end, to the centre of the length of the link; the upper end being attached to a lever, whose shaft is supported in brackets, the latter being secured to the front of the cylinder. Motion is imparted to the lever

weight-shaft by a toothed quadrant keyed thereon. The hand-wheels are horizontally secured on vertical shafts; the latter are formed with worms, which gear with the quadrants. The wheels in question are situated at the inner extremities of each main framing. The starting platform, above the steam piping, supports the wheel-shaft columns, thus combining simplicity of connection with economy of construction.

The condensers, seen beyond the cylinders, Fig. 6792, at the back of the same, are the surface kind. The motion requisite for the air and circulating pumps, double acting, is derived from the steam-pistons. The exhaust steam enters the condenser at the top by separate pipes, connecting with the exhaust-passages on the cylinders. The supply steam pipe is placed almost in the centre of the entire arrangement, passing from end to end, and thus being common to each slide-casing.

The feed and bilge pumps are worked by arms secured on each air-pump rod. The valve-boxes are secured at the sides of each condenser, to facilitate access for inspection and repair.

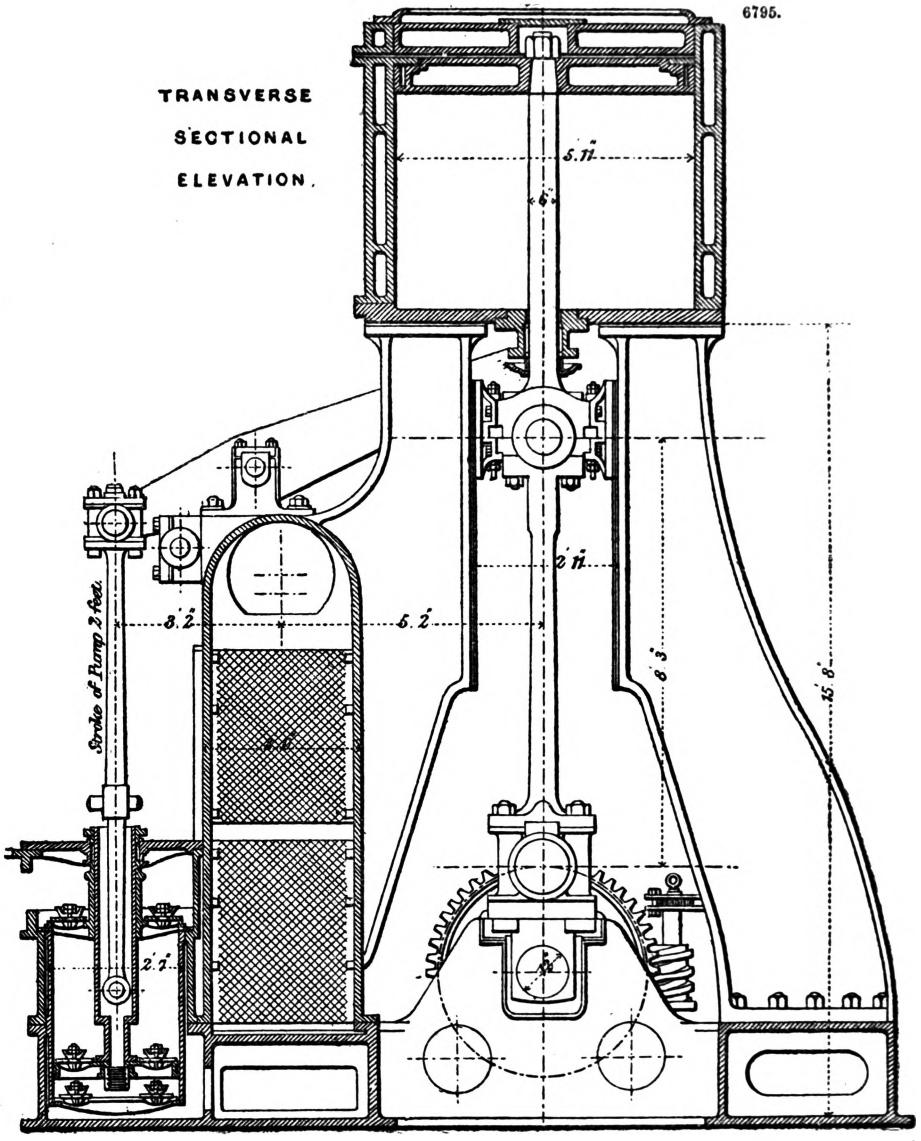

Figs. 6793 to 6798 are of a neat arrangement of compound engines by Day, Summers, and Co. Fig. 6793 is the end elevation, which shows the valve-handles and starting gear on the right hand of the crank-shaft, near the floor line, the gear being the rack-and-pinion type with the rack attached at an angle to the lever of the weight-shaft, on which are secured the two levers in connection with the links by the twin side rods.

The pump-motion gear is simple, being the general lever kind, with the usual link attachment to the main cross-head pin of the piston-rod. Above this is the high-pressure valve-casing, with the stop-valve casing at the right-hand side, and beyond that is the outline of the cylinder, with the indicator tubing shown on the left-hand side.

In the plan, Fig. 6794, is seen the receiver connecting the high and low cylinders on both sides; there is, however, not much detail to direct attention to, because the two views correspond.

Fig. 6795 is a transverse sectional elevation, which shows sections of the low-pressure cylinder, surface condenser, and air-pump. The cross-head guide-block of the main steam piston-rod is

6794.

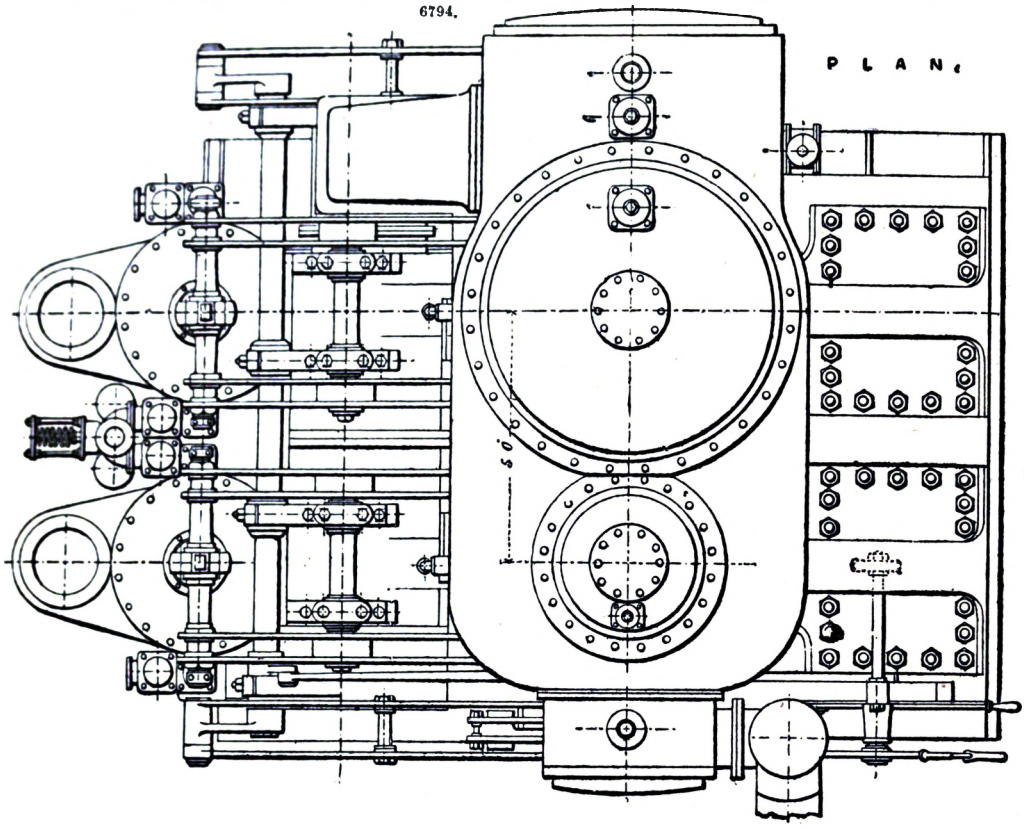

6796.

SECTIONAL PLAN

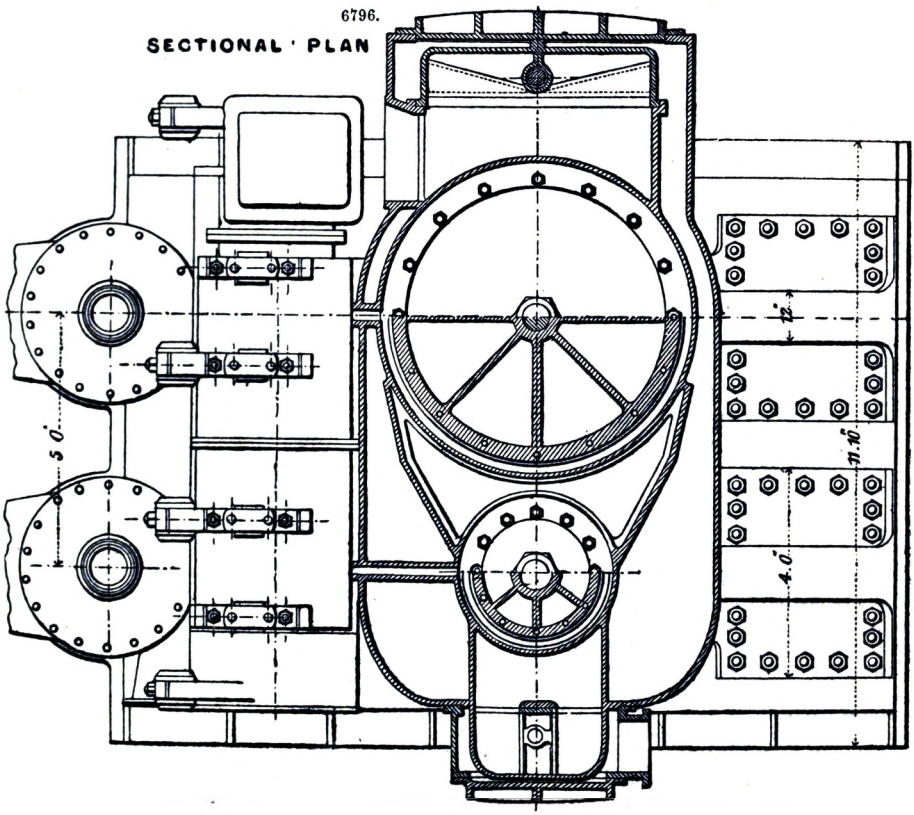

novel in design and arrangement, consisting of a block formed with the rod, and a cap on the lower half, secured by bolts and nuts that also adjust the wearing surfaces around the cross-head pin; the lateral adjustment of the working surfaces at the sides is attained by screw wedges with nuts at each end.

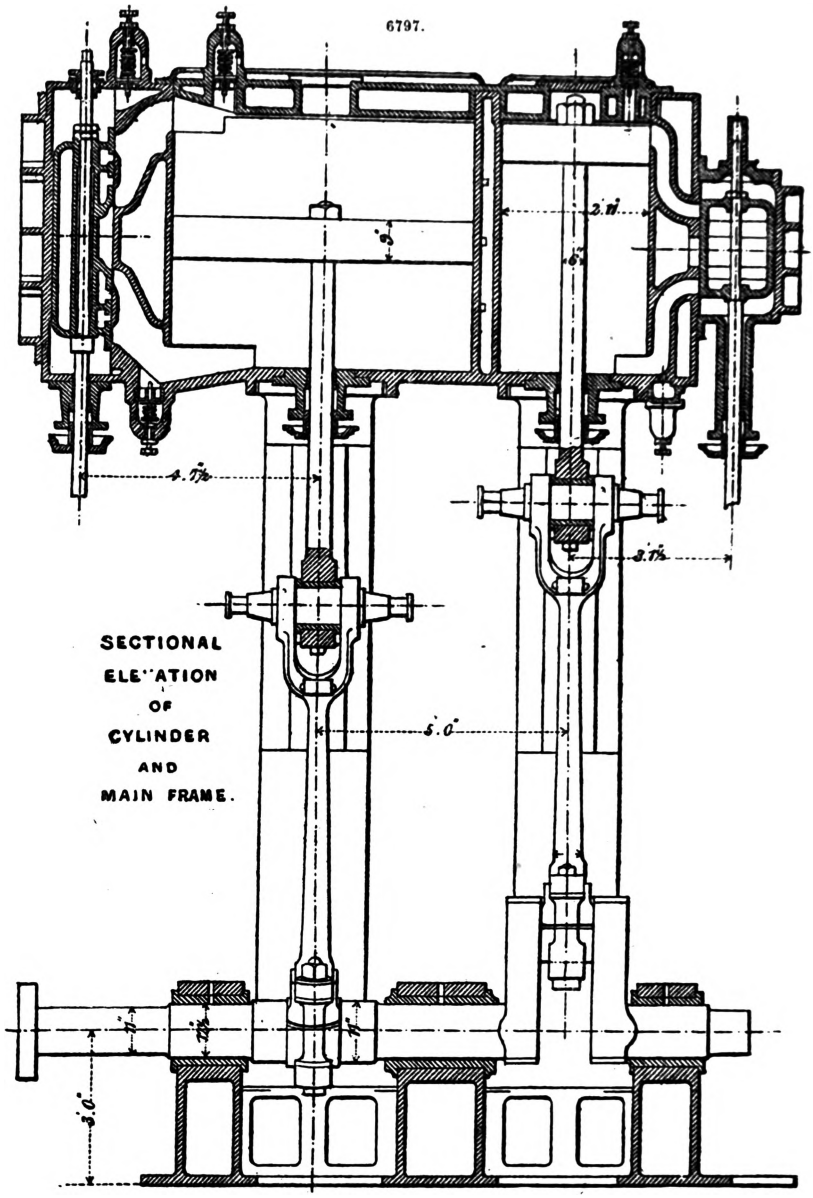

Fig, 6796 is the sectional plan of the cylinders, slide-valves, casings, and pistons, showing the receiver that connects the high-pressure and low-pressure cylinders; and on the left-hand side are the condenser-pumps and brackets, opposite to which is the foundation framing, on which the guide-frames are supported. The slide-valve of the high-pressure cylinder, Fig. 6797, is single-ported, with no extra cut-off valve at the back, the grade of expansion being attained by shifting the link-motion. The slide-valve of the low-pressure is double-ported, or equilibrium double-ported. The cross-heads are shown complete with the block-head in section, as also are the cranked shaft bearings and the lower frame bearers. Fig. 6798 is the sectional plan of the condenser and main frame; the air and circulating pumps are also in section, to show the number of the piston-valves in the one case and the discharge-valves in the other. The sections of the main frame and condenser clearly explain its form and the necessary ribs to obtain the requisite strength.

The following are the dimensions of these engines, which are of 300 horse-power, and were built for the Royal Mail Company's screw steamer Liffey;—Nominal horse-power collective, 300; diameter of high-pressure cylinder, 36 in.; diameter of low-pressure cylinder, 72 in.; length of stroke, 4 ft. 2 in.; diameter of air and circulating pumps, 30 in.; diameter of feed and bilge pumps.

5 in.; number of tubes in each condenser, 2064; length of tubes in each condenser, 7 ft. 6 in.; condensing surface in each condenser, 3040; diameter of propeller, 15 ft.; number of blades in

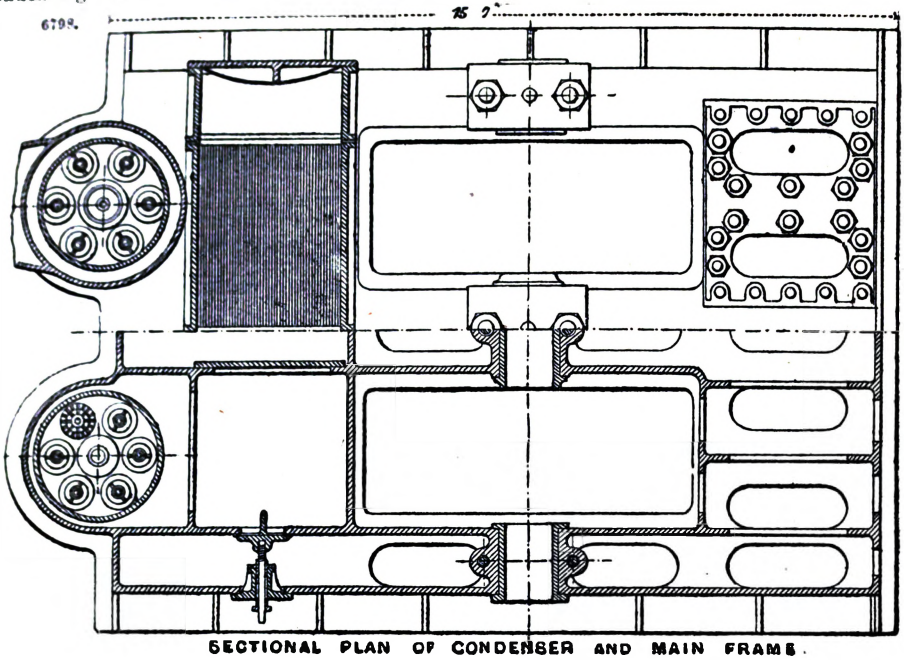

SECTIONAL PLAN OF CONDENSER AND MAIN FRAME.

each propeller, 4; pitch of propeller, 19 ft. uniform; number of boilers, 4; diameter of boilers, oval, 14 ft. 3½ in. high × 10 ft. 2½ in. wide; length of boilers, 8 ft. 5 in.; total number of tubes in all boilers, 864; total heating surface in all boilers, 5005 sq. ft.; total number of furnaces, 12; area of total number of furnaces, 186·7 sq. ft.; size of funnel, 6 ft. diameter; load on safety-valve, 60 lbs. the square inch; pressure in boilers on at full trial power, 60 lbs.; vacuum in condenser on trial at full power, 26 in.; average revolutions a minute on trial at full power, 71; average indicated horse-power, both engines, high-pressure cylinder 754, low-pressure cylinder 806—total, 1560.

TABLE I.—AVERAGE CONSUMPTION OF COAL, TO EACH INDICATED HORSE-POWER AN HOUR, BY STEAM SHIPS WITH COMPOUND ENGINES IN LONG SEA VOYAGES.

Class A Compound Engines with one High and one Low pressure vertical Cylinder, working two cranks at right angles.
„ B „ „ two „ two „ inclined Cylinders, „ two „ opposite each other.
„ C „ „ two „ two „ vertical „ „ two „ at right angles, cylinders combined, annular.
„ E „ „ two „ two „ vertical „ „ two „ at right angles, cylinders combined, high at top.

Engines.		Cylinders.			Revs. a min.	Piston Speed a min.	Screw Propeller diameter.	Indicated Horse-power.			Steam Pressure.			Coal Consumption.	
No.	Class.	Diameter.		Stroke.				High.	Low.	Total.	Boiler.	Mean Effective.		Every 24 hours.	Each Ind. H. P. an hour.
		High.	Low.									High cyl	Low cyl.		
		in.	in.	in.	No.	ft.	ft.	H. P.	H. P.	H. P.	lbs.	lbs.	lbs.	tons.	lbs.
1	A	42	75	42	47	329	17	373	420	793	58	27·0	10·3	24·5	**2·80**
2	A	45	80	36	51	306	15½	476	349	825	51	34·2	7·5	23·0	**2·60**
3	A	36	72	50	50	417	14¾	467	393	860	46	36·4	7·6	24·0	**2·60**
4	A	62	112	48	47½	381	18	787	665	1452	45	22·6	5·8	33·8	**2·18**
5	A	38	68	33	61	335	12	298	311	609	45	25·8	8·4	13·8	**2·12**
6	C	22	52	36	55	330	14	292	204	496	48	38·6	6·5	11·2	**2·12**
7	A	34	59	36	58	348	16	304	336	640	55	35·8	10·5	14·5	**2·11**
8	A	51	86	48	54	434	18	723	766	1489	49	26·9	10·0	33·2	**2·08**
9	A	46	80	39	65	422	14	527	710	1237	54	24·8	11·0	27·6	**2·08**
10	A	60	104	48	60	480	18	1027	1493	2520	52	25·0	12·1	55·8	**2·07**
11	A	41	70	39	70	455	15	361	525	886	58	20·8	9·6	19·5	**2·05**
12	A	46	82	48	54	432	17	761	633	1394	54	35·0	9·1	30·0	**2·01**
13	A	48½	84½	42	61	427	16	669	700	1369	55	28·0	9·6	30·0	**2·00**
14	A	34½	60	36	53	316	15	222	226	448	54	15·0	8·4	9·6	**2·00**
15	A	46	80	39	..	..	14½	..	..	..	50	..	..	19·4	**1·99**
16	A	36	72	50	52	433	14¾	457	401	858	54	34·2	7·5	18·4	**1·95**
17	A	26	52	36	51	306	17	153	211	364	53	31·0	10·7	7·6	**1·94**
18	A	44	78	42	57	399	15½	456	508	964	60	24·8	8·7	16·5	**1·70**
19	B	38	76	51	25½	216	Paddle	553	432	985	55	37·3	7·3	18·0	**1·70**

Average Consumption of Coal, lbs. each Ind. H. P. an hour, **2·11**

TABLE II.—BOILERS OF COMPOUND MARINE ENGINES.

Engine. No.	No. of Boilers	Boiler Shell. Diameter.	Length.	Thickness.	Furnace Flues. Total No.	Diameter.	Tubes. Total No.	Length.	Diam. external.	Fire-grate Area total.	Steam Pressure working.	Total Heating Surface. Tubes.	Furnaces, &c.	Total.
	No.	ft. in.	ft. in.	in.	No.	ft. in.	No.	ft. in.	in.	sq. ft.	lbs.	sq. ft.	sq. ft.	sq. ft.
20	6	14 3	10 4	·87	18	3 6	1260	7 5	3·50	315	60	8615	1986	**10,601**
21	6	10 8	17 0	·87	24	3 0	1392	6 9	3·50	432	65	8602	1536	**10,138**
10	3	12 3	16 0	·78	18	3 0	960	6 9	3·75	297	56	6355	1325	**7,680**
4	8	12 0	8 0	·75	24	3 1	1392	5 6	2·75	333	50	5510	1745	**7,255**
22	3	11 5	17 0	·75	18	2 10	1110	6 6	3·00	306	60	5661	1422	**7,083**
23	3	12 3	16 0	·81	18	3 1	924	6 9	3·75	279	60	6122	856	**6,978**
8	2	13 4	18 8	·81	12	3 3	840	7 6	3·62	228	60	5959	968	**6,927**
13	2	13 3	18 0	·87	12	3 3	868	6 6	3·50	234	55	5060	1150	**6,210**
12	2	12 7	17 1	·75	12	3 0	868	7 0	3·25	216	60	5164	902	**6,066**
24	4	12 0	8 11	·75	12	3 0	876	6 0	3·00	180	60	4042	1026	**5,068**
2	4	10 × 13½ ft.	9 5	·62	12	2 10	600	7 0	3·50	187	52	3850	1158	**5,008**
3	4	10 × 13½ ft.	9 5	·62	12	2 10	600	7 0	3·50	187	54	3850	1158	**5,008**
18	2	10 6	17 6	·69	8	3 3	816	6 4	3·00	182	60	4000	720	**4,720**
16	2	12 3	17 6	·75	8	3 6	552	7 6	3·75	168	55	4067	575	**4,642**
25	2	12 0	16 5	·75	12	2 10	576	7 0	3·50	170	60	3132	1191	**4,323**
26	2	12 3	17 6	·75	12	3 1	480	7 6	3·75	185	54	3534	763	**4,297**
1	2	13 1	10 7	·87	8	2 10	456	8 0	3·50	136	60	3342	726	**4,068**
19	2	12 0	16 6	·75	12	3 0	472	7 0	3·75	180	55	3243	761	**4,004**
15	2	12 0	12 0	·75	12	3 0	904	5 0	2·62	189	50	3104	526	**3,630**
27	2	10 10	12 8	·75	8	3 1	768	5 2	3·00	120	64	3078	460	**3,538**
28	2	10 6	15 0	·75	8	3 1	640	6 0	3·00	135	60	3014	475	**3,489**
9	2	11 9	12 6	·75	12	2 10	816	5 0	2·62	170	56	2799	623	**3,422**
7	2	14 3	9 3	·87	6	3 6	420	6 3	3·75	115	60	2557	603	**3,160**
11	2	11 0	13 6	·75	8	3 0	568	5 6	3·25	114	60	2607	491	**3,098**
14	1	13 6	15 9	·87	6	3 2	396	6 4	3·50	107	60	2268	427	**2,695**
6	2	9 × 14 ft.	9 2	·56	4	3 3	324	6 6	3·50	76	65	1790	502	**2,292**
5	1	12 0	12 0	·75	6	3 1	506	5 0	2·62	104	48	1738	289	**2,027**
17	2	9 10	10 1	·62	4	2 11	268	7 3	3·25	66	50	1677	305	**1,982**

TABLE III.—SURFACE CONDENSERS OF COMPOUND MARINE ENGINES.

Engines. No.	Class.	Cyls. Diam. High.	Low.	Stroke Length.	Revs. a minute.	Indicated Horse-power working.	Steam Pressure working.	Condenser Tubes. Number.	Length.	Diam. external.	Space between.	Total Condensing Surface.	Circulating Pump. Diam.	Stroke.	Condenser vacuum working.
		in.	in.	in.	No.	H. P.	lbs.	No.	ft. in.	in.	in.	sq. ft.	in.	in.	Ins. Mer.
20	A	56	97	48	..	..	60	2000	8 6	1·00	·75	4459	Centrifugal		25½
21	A	60	106	54	..	..	65	2419	15 6	·75	·37	7361	17 D	24 *D*	27½
10	A	60	104	48	60	2520	56	2257	14 1	·75	·35	6249	13½ D	26½ *D*	27¾
4	A	62	112	48	47½	1452	50	2415	14 1	·75	·35	6666	13½ D	32½ *D*	28
22	A	50	88	45	53	..	60	1706	6 7	1·00	·62	2934	26 S	22½ *S*	25
23	A	60	104	48	..	..	60	2256	14 0	·75	·35	6201	16 D	24 *D*	28½
8	A	51	86	48	54	1489	60	1759	8 6	1·00	·75	3914	Centrifugal		26½
13	A	48½	84½	42	61	1369	55	1725	13 4	·75	·37	4504	19½ S	16 *D*	28
12	A	46	82	48	54	1394	60	2304	6 9	1·00	·62	4078	26 S	25½ *S*	25
24	A	49½	86	45	..	..	90	1740	11 6	·75	·35	3929	20 S	21 *D*	27¾
2	A	45	80	36	51	825	52	4872	5 6	·56	·44	3944	36 S	24 *S*	26
3	A	36	72	50	50	869	54	2064	7 6	·75	·37	3040	30 S	25 *S*	26
18	A	44	78	42	57	964	60	1338	12 7	·75	·37	3250	18½ S	15 *D*	29
16	A	36	72	50	52	858	55	2064	7 6	·75	·37	3040	30 S	25 *S*	27
25	A	46	82	42	..	..	60	1228	11 6	·75	·35	3773	20 S	18 *D*	27
26	A	36	72	40	52	780	54	2064	7 6	·75	·37	3040	30 S	25 *S*	27
1	A	42	75	42	47	793	60	1797	6 0	1·00	·62	2821	26 S	21 *S*	26
19	B	38	76	51	25½ Pad.	985	55	1663	8 3	·75	·35	2694	16 D	20 *D*	27½
15	A	46	80	39	..	..	50	1292	10 10	·75	·35	2758	16 S	20½ *D*	28
27	A	39½	68	42	..	..	64	1170	9 9	·75	·35	2240	20 S	16 *D*	27
28	E	26 26	52 52	42	45	820	60	1900	6 3	·75	·50	2400	24 S	23 *S*	26½
9	A	46	80	39	65	1237	56	1289	10 10	·75	·35	2752	16 S	20½ *D*	27½
7	A	34	59	36	58	640	60	1342	7 2	1·00	·75	2573	Centrifugal		28
11	A	41	70	39	70	886	60	898	12 5	·75	·35	2189	14 S	17¼ *S*	27
14	A	34½	60	36	53	448	60	890	7 9	1·00	·75	1811	21 S	36 *S*	27
6	C	22	52	36	55	496	65	608	7 10	1·00	·87	1246	22 S	18 *S*	26½
5	A	38	68	33	61	609	48	911	9 2	·75	·35	1654	13 S	15¾ *D*	28½
17	A	26	52	36	51	364	50	944	6 0	·75	·31	1112	20½ S	19 *S*	27

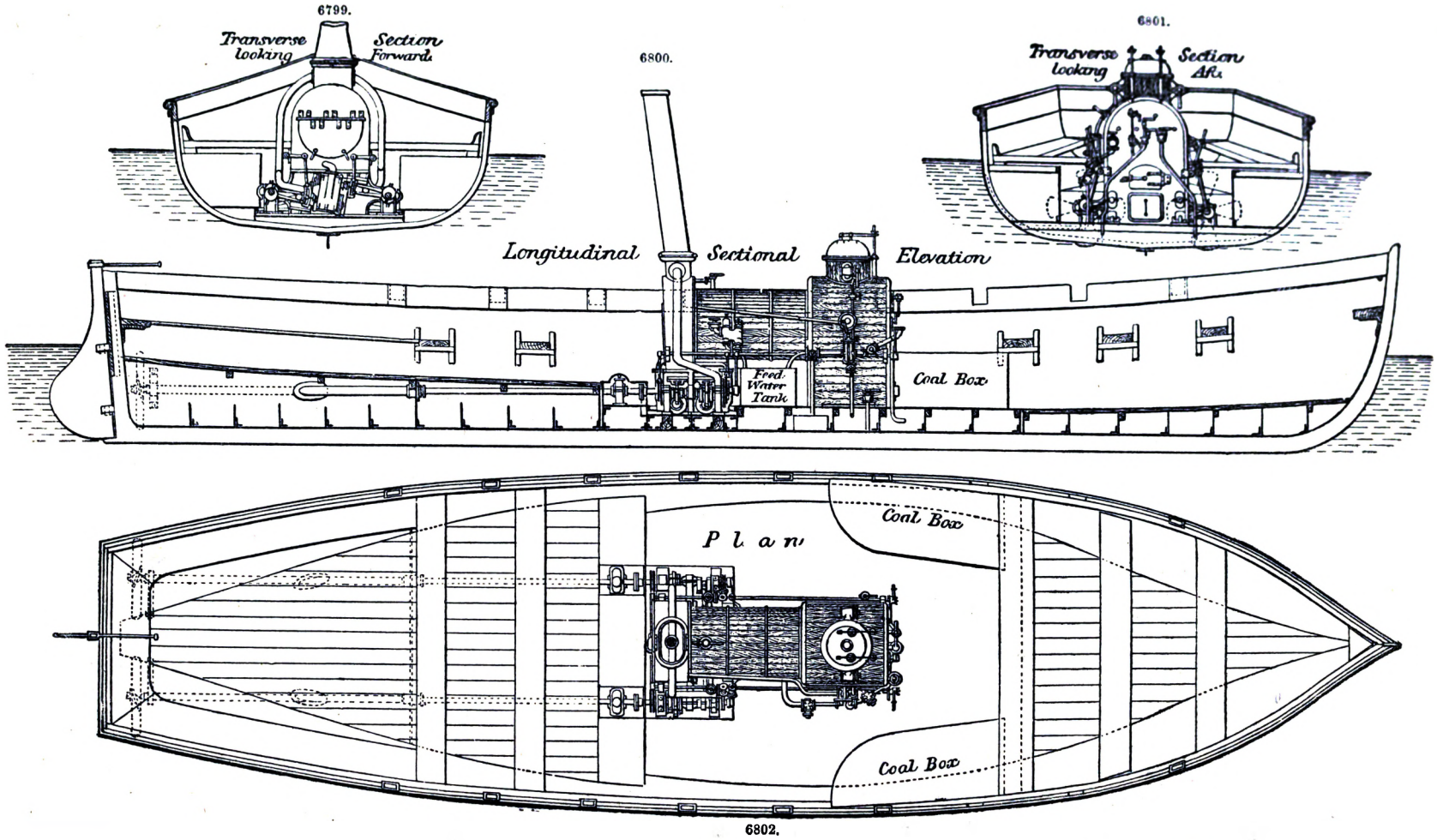
6799.
Transverse Section looking Forward.
6800.
6801.
Transverse Section looking Aft.
Longitudinal Sectional Elevation
Feed Water Tank.
Coal Box
Plan
Coal Box
Coal Box

6802.

Tables I., II., and III., giving various particulars relating to compound engines, are taken from a most interesting paper read by Fredk. J. Bramwell, before the Inst. Mechanical Engineers in 1872. In Table III., under column "Circulating Pump," Diameter—s denotes single pump, D, double pump; Stroke—*S*, single acting, *D*, double acting.

6803.

Front Elevation.

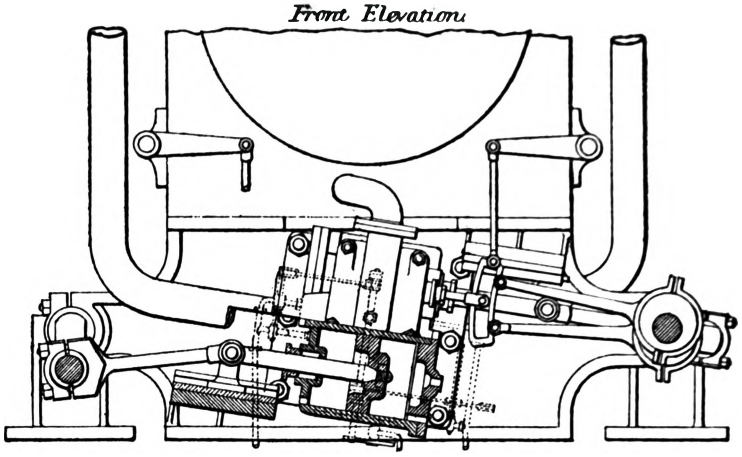

6804.

Sectional Plan.

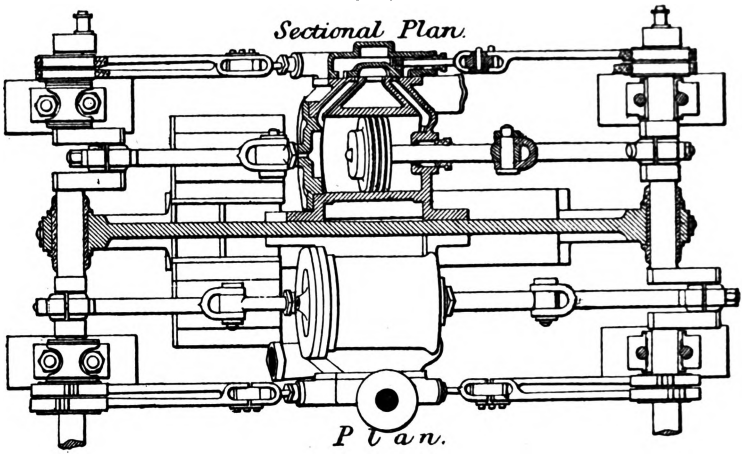

Plan.

6805.

Complete End Elevation.

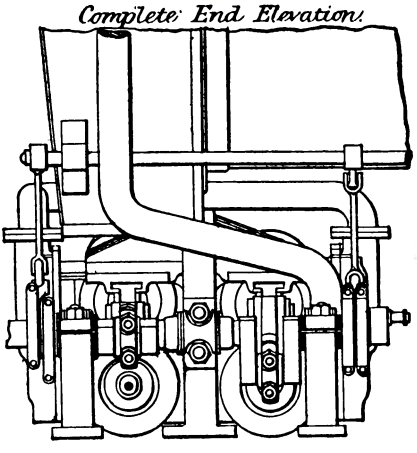

6806.

Transverse Sect. Elevation. Transverse Section at A.B.

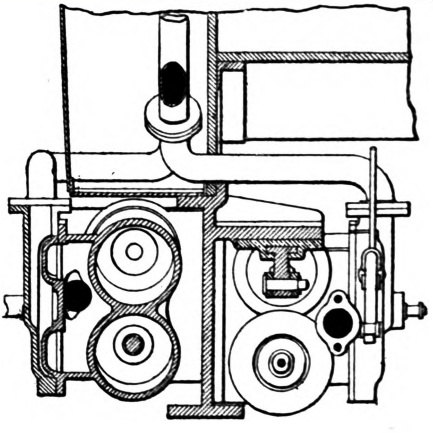

Steam-Launch Screw Engines.—Steam launches are used in place of the twelve or sixteen oared boats that were formerly employed as tenders to men-of-war. The row-boats were propelled at the rate of about 7 miles an hour, but the steam launch runs 12 miles an hour with ease. The boilers

used with steam launches are usually of the locomotive class, and the engines vertical, either secured to the shell at the fire-box end or to the smoke-box. N. P. Burgh having to design launch engines for Maltese service, has ignored the usual arrangements, and placed the engines at an angle *under* the smoke-box, thus making the support for that box the securing plate for the engines. The illustrations, Figs. 6799 to 6809, show a side elevation of Burgh's engines, sections and complete views. The arrangement consists of four cylinders, each pair being in one casting, and secured to the box support plate, as in plan Fig. 6804. Fig. 6805 is the end elevation, and Fig. 6806 shows sections through one cylinder, and also through the slipper guide bracket. Fig. 6807 is a skeleton arrangement of the lever-gear for the blow-through cocks, showing that one hand manipulates the entire set. One of the improvements Burgh introduced was placing the supply steam pipes inside the boiler, and forming the steam-cocks with double branches for that purpose, as shown in section and complete views by Figs. 6808, 6810; after the pipes passed through the boiler they were

6807.

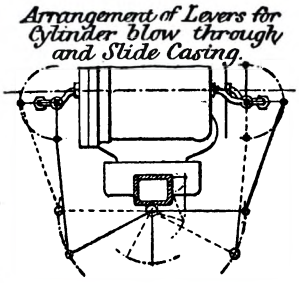

6808.

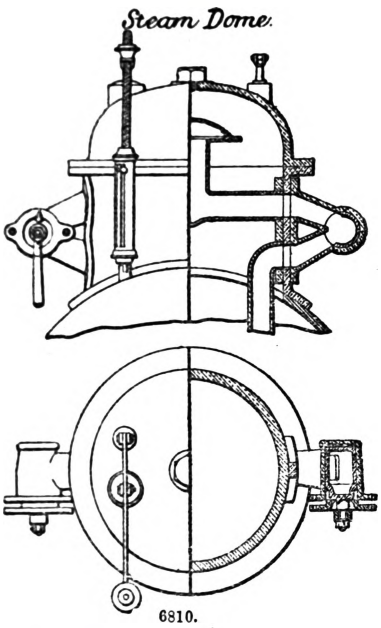

6809.

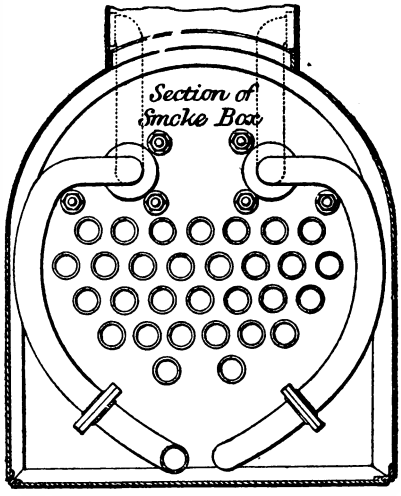

6810.

curved down on each side of the flame-tubes in the smoke-box, Fig. 6809. To make this arrangement fully understood we have illustrated its application in a launch, as shown in four views, Figs. 6799 to 6802.

See MARINE ENGINE. STATIONARY ENGINE.

SCREW-MAKING MACHINE.

Figs. 6811 to 6815 refer to a machine for turning and nicking the heads of joiners' and other wood screws. The machine has been brought to its present form through a number of ingenious combinations, but the most important feature about it, the feeding arrangement, and the method of driving and stopping the spindle, is the invention of Wm. Avery.

Fig. 6811 is a front elevation; Fig. 6812, back elevation; Fig. 6813, plan with the V trough for holding the hopper or rough screw-blanks, drawn in dotted outline only, to show the mechanism below more clearly. Figs. 6814, 6815, end elevations.

The screw-blanks are formed from wire of the size required for the body of the screws, in a heading machine, into which the wire is fed by an intermittent motion through a die. The wire is then cut off to the required length, and the short length held in the die has a head formed on it by the wire being pressed into a conical recess in the die by a plunger; or if a rose head is to be formed, the recess of corresponding shape is formed in the plunger. The blanks thus produced have burrs and irregularities on the heads, which it is one of the objects of the machine illustrated to remove by a turning process. The formation of the nick across the head for the screw-driver is also effected in the same machine.

The screw-blanks are taken from the heading machine, and after annealing, when that is necessary, are thrown loosely into the hopper or trough *a*. The machine being set in motion, a fork or picker-up *b* is caused by the frame *c*, operated by the cams *d*, *e*, to vibrate forward and dip its points down into the irregular mass of screw-blanks in the hopper, tilting up as it goes back, as in Figs. 6811, 6812, certain of the screw-blanks being caught with their stems between the blades of the fork and suspended by their heads. The fork *b* is then brought back so that its hinder part comes in line with a pair of curved cheeks *f*, forming a kind of railway down which the blanks slide

from the fork, which, it will be seen, is thus the feeding instrument. It is arranged to act once only for every two or three screw-blanks turned and nicked, as it generally picks up several blanks at each movement. As the blanks are sliding down the curved railway *f*, the lowermost blank drops in a horizontal position between the jaws of a pair of yielding nippers *g*, and is there held until required. It is then seized by another pair of nippers *h* and moved downwards, still being held

6811.

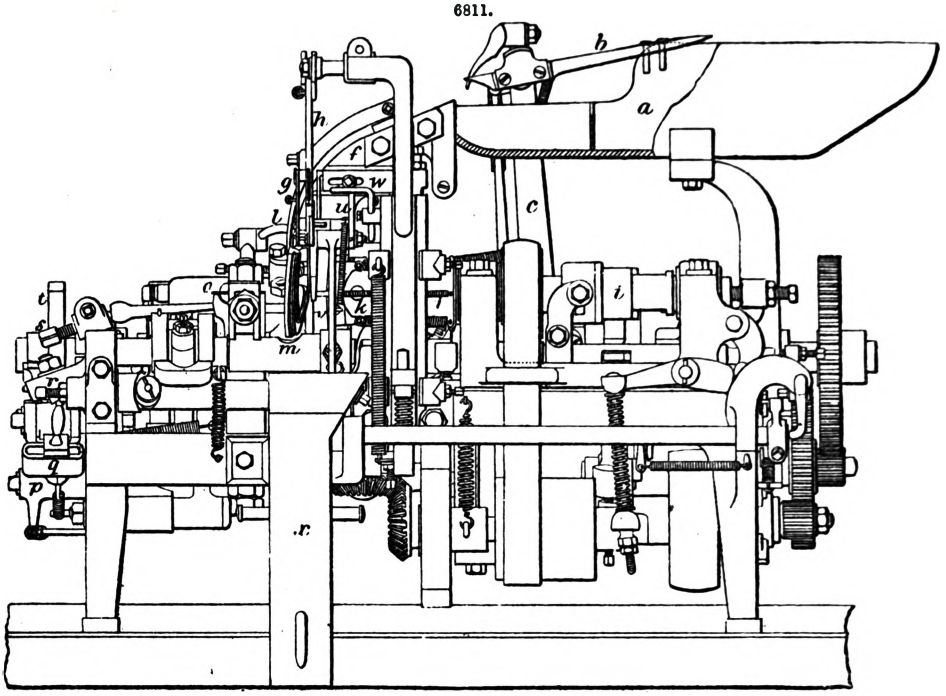

6812.

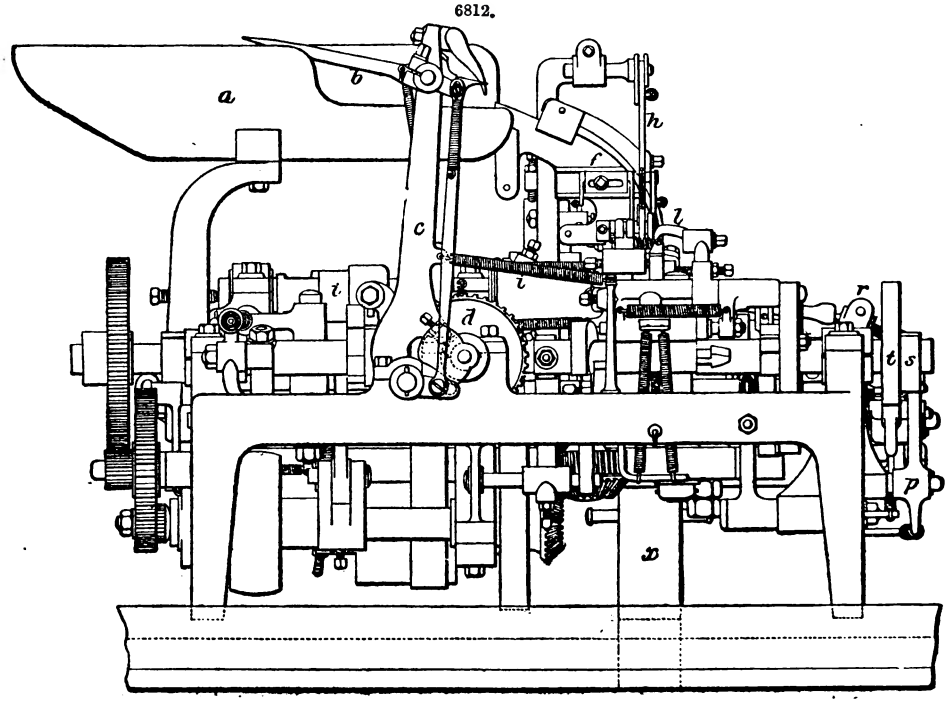

horizontally, out of the grip of the first-named nippers *g*, and brought opposite to the end of a revolving spindle *i*, furnished with holding-jaws or chucks *k*. The spindle *i* being stopped for an instant, and the jaws having been opened to liberate the blank last finished, the plain end of the new blank is thrust by a finger *l* into the jaws, which then close, the nippers *h* retire, and the spindle and blank are set revolving; a back-stay is brought up to support and steady the blank

and cutter m. This cutter is fixed into the oscillating tool-rest n, and is shaped to suit the head to be turned. It is applied gradually, and the head roughly turned, after which the cutter m is with-

6813.

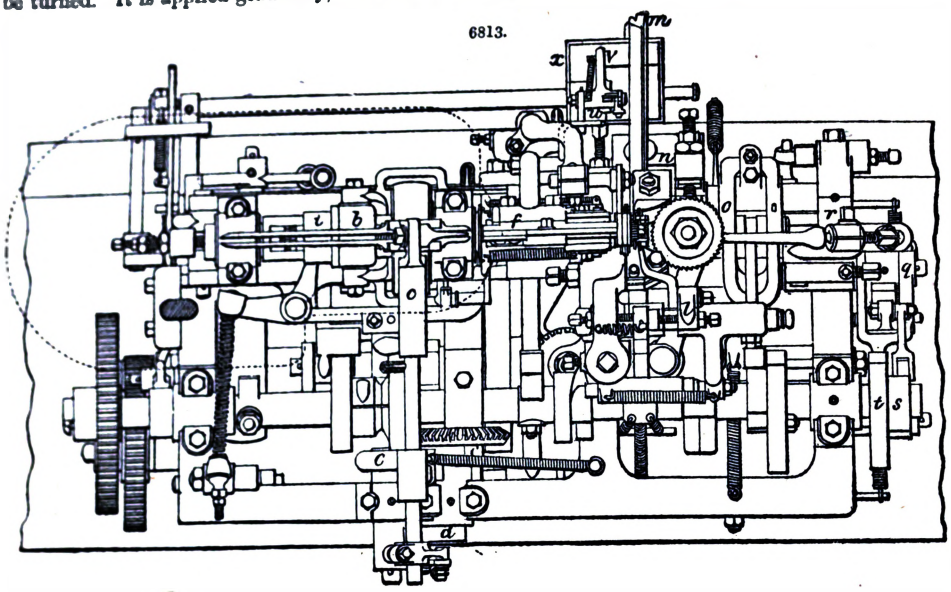

6814.

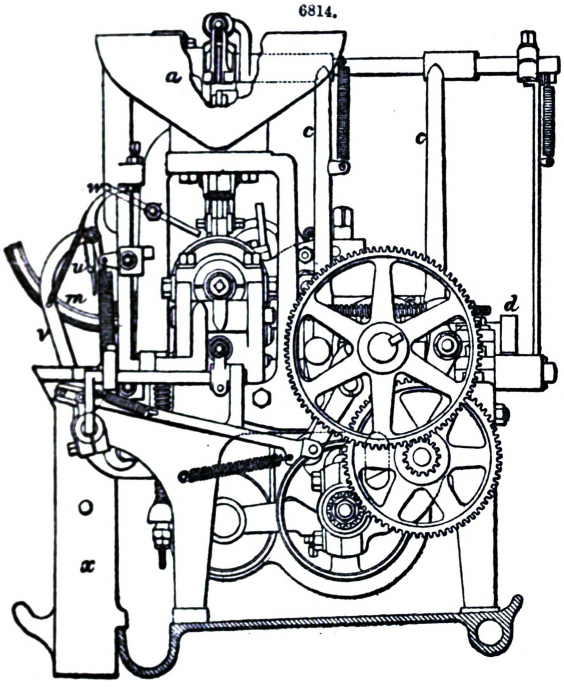

6815.

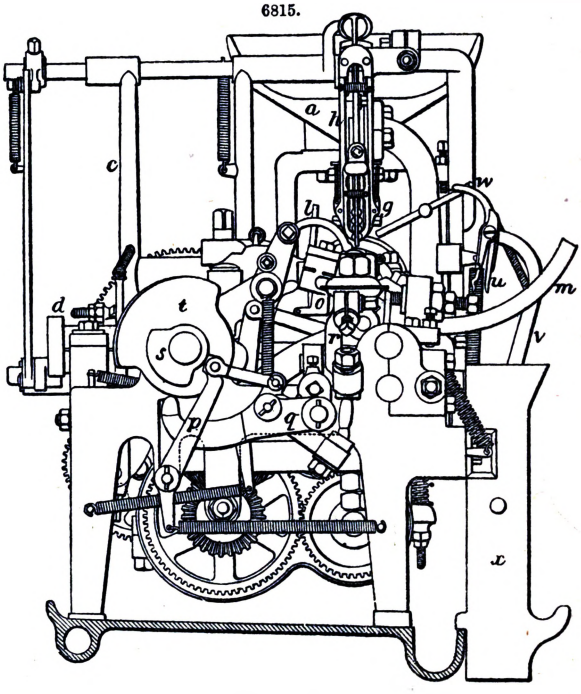

drawn, the spindle i, with its partly-turned blank, stopped, and a brake applied to prevent their revolving, while the revolving saw o is brought forward by the levers p, q, r, and cams s, t, and cuts the nick in the head of the blank. When this is done, the saw retreats, the spindle and blank revolve again, the cutter m is brought up a second time, but with a slower feed, and the burrs left by the nicking saw are removed, and the head generally smoothed and finished, the spindle i stops again, the jaws or chucks open, and at that instant a pair of discharging fingers u on an oscillating arm v are moved forward to seize the finished blank; sidewise, to remove it from the chuck, and backwards into the position shown. When the tail-piece of the fingers comes against a stop w on the frame they are opened, and the completed blank drops down the shoot x into a receiving vessel beneath.

The whole of the motions above described are self-acting, so that after the rough blanks are thrown loosely into the hopper or trough a, they are not touched by the operative until they are removed to the worming machine, where the thread is cut.

In the worming machine, similar means are adopted to feed the blanks into the machine, and to

insert them into the chuck of the spindle, the only difference being such as is incidental to the introduction of the head of the blank into the chuck instead of the end. The thread is cut by a single V cutter, to which the requisite traversing motion is given by means of a mandrel screw and comb.

An ingenious plan has been adopted in these machines to save labour, and consumption of steel in the cutters. The plan has been to turn a ring of tool steel of just such a section on the outer edge that it will fit the finished head of the screw, as shown in Fig. 6813. This ring of steel is then cut into two or more pieces, and each piece forms a cutter of considerable length, which turns both the top and under side of the head, and only requires grinding to the proper angle to keep it in working order until worn too short to use.

See PIN-MAKING MACHINE.

SCREWING MACHINE. FR., *Machine à tarauder;* GER., *Schraubenmaschine;* ITAL., *Macchina da viti;* SPAN., *Máquina para hacer tornillos.*

See MACHINE TOOLS.

SCREW-JACK. FR., *Crie à vis;* GER., *Hebeschraübe;* ITAL., *Cricco a vite;* SPAN., *Gato.*

See HAND-TOOLS.

SEAT. FR., *Siége;* GER., *Sitz;* ITAL., *Sede;* SPAN., *Asiento.*

In machinery, a seat is that part upon which another part rests; as a valve-seat.

SEA WALL. FR., *Mur à la Mer;* GER., *See Wall;* ITAL., *Murazzo;* SPAN., *Murallas de mar.*

Sea walls occupy an intermediate position between reservoir walls and breakwaters. They resemble the former in being required to withstand the pressure of still water, and the latter in being exposed to the action of waves. Thus they partake of the nature of both of these structures, and their construction must consequently be in accordance with the conditions which these have respectively to fulfil. The considerations respecting those conditions, and the calculations necessary to duly provide for them, having been already treated at length, we have only to point out briefly their application to the present case, and to describe certain features which are peculiar to it. Frequently, sea walls are erected to protect the land from the encroachments of the sea. In such a case, the structure partakes of the character of a retaining wall, and must be constructed accordingly. But in any case, whether the conditions to which the wall is subject approach more nearly to those of a retaining wall or a reservoir wall, its face is exposed to the action of waves, and it becomes, therefore, important to consider the nature and the effects of this action.

Rankine, who continued the investigations of Scott Russell, states that when waves roll straight against a vertical wall, as in Fig. 6816, they are reflected, and the particles of water for a certain distance in front of the wall have motions compounded of those due to the direct and to the reflected waves. The results are of the following kind;—The particles in contact with the wall, as at A, move up and down through a height equal to double the original height of the waves, and so also do those at half a wave length from the wall, as at C; the particles at a quarter a wave length from the wall, as at B, move backwards and forwards horizontally, and intermediate particles oscillate in lines inclined at various angles.

6816.

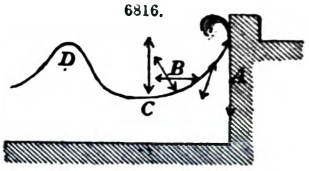

It is not essential that the face of the wall should be vertical, as in the figure, in order to reflect the waves; it will reflect them when the batter is considerable. According to Scott Russell, it will do so even with a batter of 45°.

Thus it will be seen that the action of a wave is to lift the stones in the face of the wall against which it breaks, and this fact must be borne in mind in designing the wall. For the same reason, the cope should not project beyond the face, as in such a case it would offer a surface to the crest of the wave. It should also consist of large stones sufficient to resist by their own weight the pressure due to the greatest height of a wave above its bed; they should also be dowelled to each other. Whenever possible, the cope should be raised above the crest of the highest wave when augmented in height by reflection. It has been ascertained that the most powerful action of waves occurs at half-tide when the shoreward current is strong. The largest blocks in the face of the wall should therefore be placed at that level. The fall of the wave when reflected from the face of the wall causes a very severe undermining action at the foot. This action may be resisted by a flat stone pitching having no bond with the wall, or by a bed of concrete 2 ft. broad by 1 ft. thick, joining the wall. A series of groins will also do good service in protecting the foot of the wall. In some cases the undermining action has been diminished by forming the face of the wall into steps, so as to break the descent of the water. This mode of forming the face is, however, very objectionable, and should never be resorted to.

When the wall is of stone, the face should be composed of hammer-dressed ashlar, or block-in-course. In masonry exposed to violent blows from waves, the stones forming the face have a tendency to jump out. This is partly occasioned by infiltrations of water through the joints, which water, being compressed by the blow, exerts a pressure tending to force the stone outwards. To counteract this tendency, when the action of the waves is very severe, the stones of the face may be dovetailed into each other and tabled with the next course. This constitutes the most effective remedy, but it requires to be executed with great care, and it entails a large additional expense. Instead of the dovetailing and tabling, iron cramps may be used; these have been found to be sufficient in many exposed situations. The stones in the face of the Plymouth breakwater are protected by this means. To prevent the infiltration of the water, the outer edges of the joints should be laid in cement. Pointing is insufficient, as the shock of the waves will in a short time cause the cement to jump out. The backing may be of coursed rubble, built in strong hydraulic mortar. Sometimes strong concrete is used as a backing, and in many respects it is superior to rubble masonry for this purpose. As the pressure is concentrated towards the back of the wall at high water, an inferior kind of masonry is not suitable to that position; but a great objection to the employment

of two classes of masonry or two kinds of material in any reservoir or sea wall is the inequality in settling down. This inequality weakens, or in the worst cases destroys altogether, the cohesion of the backing with the face of the wall. All structures of this nature should be homogeneous, and as far as practicable monolithic. For this reason, sea walls have frequently been constructed wholly of blocks of concrete, and when the concrete has been properly proportioned and prepared, such walls are superior, in resisting qualities, to those constructed of rubble faced with block-in-course or ashlar. But better than either, wherever the conditions are suitable, inasmuch as it fulfils perfectly the two conditions of homogeneity and monolithicity, is the employment of concrete in mass for the whole of the wall. Concrete used for this purpose should be strong, and for a depth of about 6 in. from the face should be composed of fine gravel. This gives the face a better appearance, and enables it to withstand better the corroding action of the waves. In some exposed situations, it may even be desirable to slightly increase the proportion of cement in this facing. Where shingle or gravel is readily obtainable, walls may be constructed in this way at half the cost of masonry.

When a sea wall is required to stand alone, that is, when there is no earthern embankment behind it, it must be proportioned like a reservoir wall, the conditions being similar. But in the case of the sea wall, we have an additional force to take into account, namely, that of the waves, and additional strength must therefore be given to the sea wall to render its stability equal to that of the reservoir wall established under similar conditions. It is difficult to estimate the force with which a wave strikes against a vertical surface, but it is in all cases great. As it is delivered in the form of a blow, it takes effect in the most violent manner possible, and to render the wall capable of withstanding the shock with perfect security, the proportions of the reservoir wall will have to be considerably augmented. It is usual, in the latter case, to make the thickness of the wall ·7 *h*, ·5 *h*, and ·3 *h* at the bottom, middle, and top respectively; *h* being the height of the wall. In a sea wall, the conditions vary so much that it is impossible to lay down anything like an absolute rule; but for exposed situations where a good foundation may be obtained, the following may be relied upon as giving a minimum expenditure of material with ample security. Let *h* be the depth of still water in front of the wall at high water of spring tides, and *h'* equal to 1·5 *h*. Then the thickness of the wall may be *h*, ·75 *h*, and ·45 *h* at the bottom, at half the height *h'*, and at the height *h'* respectively. The portion of the wall above this height, if any, should be carried up with the same batter. Fig. 6817 represents the cross-section of a wall proportioned by this rule.

6817.

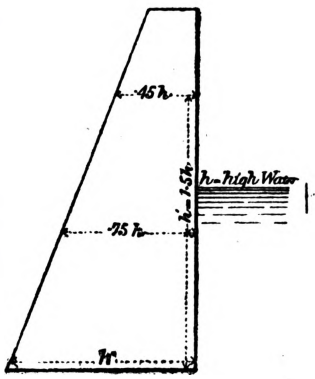

In unexposed situations, where the violence of the waves is not great, or when backed with earth, and especially when the wall is a monolithic concrete structure, the proportions ·7 *h*, ·5 *h*, and ·3 *h*, taken at the heights above indicated, will be sufficient.

A full investigation of the pressures to which this kind of wall is subjected, and a description of the manner of its construction, will be found in the articles Damming and Retaining Walls.

SEWING MACHINE. Fr., *Machine à coudre;* Ger., *Nähmaschine;* Ital., *Macchina da cucire;* Span., *Máquina de coser.*

See Boot-making Machinery, p. 496.

SHAPING MACHINE. Fr., *Machine à limer;* Ger., *Feilmaschine;* Ital., *Pialletta;* Span., *Máquina de tallar.*

See Machine Tools.

SIGNALS. Fr., *Signaux des chemins de fer;* Ger., *Eisenbahnsignale.*

Railway Signals.—In considering the means to be employed for directing and ensuring the safety of the traffic upon railways, it became evident that among other things some plan should be devised for giving instructions and information to drivers and guards of trains as to the state of the road in advance of them, or of the nearness of a preceding train, so that the speed and progress might be judiciously regulated; the plan ultimately adopted as most suitable was that of the mechanical contrivance known as signals.

Signals chiefly consist of variously shaped boards, painted a bright red colour on one side to indicate danger, and in some cases green on the other to indicate caution; these boards are fastened to a pole or mast attached to a post in such a manner as to admit of their being turned round, raised and lowered, or otherwise altered in position so that in addition to representations by colours certain movements are made.

6820. 6819. 6818.

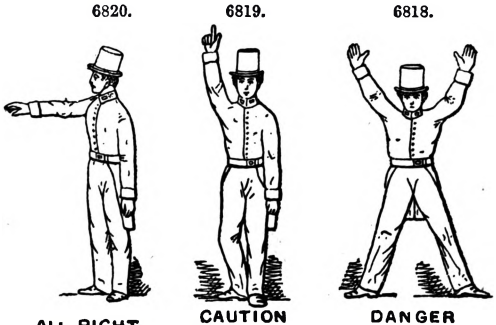

In most cases the engineers or the traffic managers arranged their particular system of signals, fixed or portable, without consideration of those used on other lines, and the natural result is that the forms and systems in use are considerably diversified; the first railways had signals placed only at the principal stations and junctions, the intermediate portions of line were regulated by policemen who had certain beats assigned to them, and who gave manual signals to the drivers as necessity demanded; danger was indicated by facing the approaching train and elevating both hands above the head, Fig. 6818; the go slow or caution signal was given

by one hand similarly held, Fig. 6819, and all right or line clear by extending the right hand from the body horizontally, Fig. 6820. Red, green, or blue, and white flags were used in many instances in conjunction with and also instead of the manual signals; gradually station or home fixed signals were introduced throughout each railway, then distant or auxiliary signals worked by wires having their levers concentrated at one locality, frequently in a cabin or signal box, for facilitating operation by the men in charge; this latter method has now to a great extent given place to a system of interlocking the mechanism for moving the points and signals, and especially at junctions and large stations; these inventions for locking prevent the possibility of an all-right signal being given when the road governed by that signal is fouled in consequence of a train being wholly upon it, or through its being intersected by a train passing from another road.

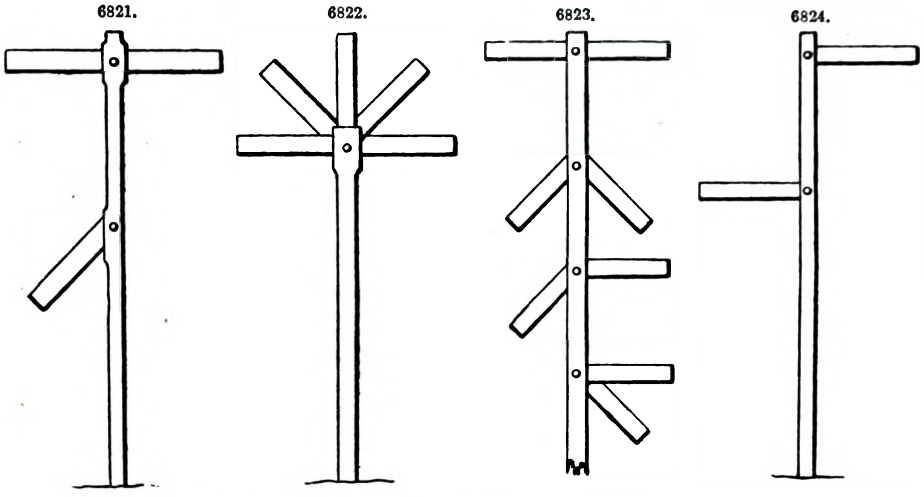

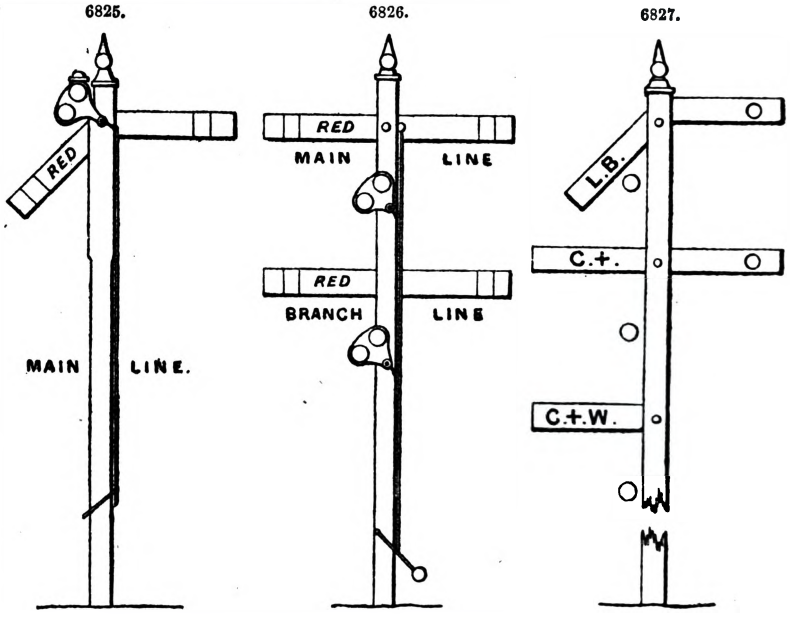

The most general form of signal is that of the semaphore; it is an imitation of the old telegraphy systems, the first of which appears to have been invented by a Dr. Hooke in 1684, Fig. 6821, and revised by a Rev. Mr. Gamble in 1795; it was then styled the radiated telegraph, Fig. 6822; further improvements were made in 1804, and in 1810 by Pasley, by Rear-Admiral Popham in 1816, Fig. 6823, and by Pasley or Macdonald in 1822, when the system was termed the Universal Telegraph, Fig. 6824; it was similar in detail to the French coast semaphore in use in 1803.

The semaphore signals as used on the railways are constructed with arms upon both sides of a mast fixed upon a centre pin free to move up and down; those on the left-hand side, as seen when facing the signal, are as a rule to govern the left roads, and there are as many arms as roads or descriptions of trains to be regulated, Figs. 6825, 6826. It has been found desirable to further distinguish the arms by numbers or letters painted upon them, or by affixing pieces of shaped iron or board, corresponding with the understood number or letter of the several roads, Figs. 6827, 6828.

On the Hull and Holderness line the arms were moved upon a pin placed in the centre of its length, Figs. 6829, 6830, and a similar method is adopted in situations where there is little room or where masts cannot be erected, as upon the London underground railways, Figs. 6831 to 6833, and Victoria Station, London, Chatham, and Dover Railway, Figs. 6834, 6835.

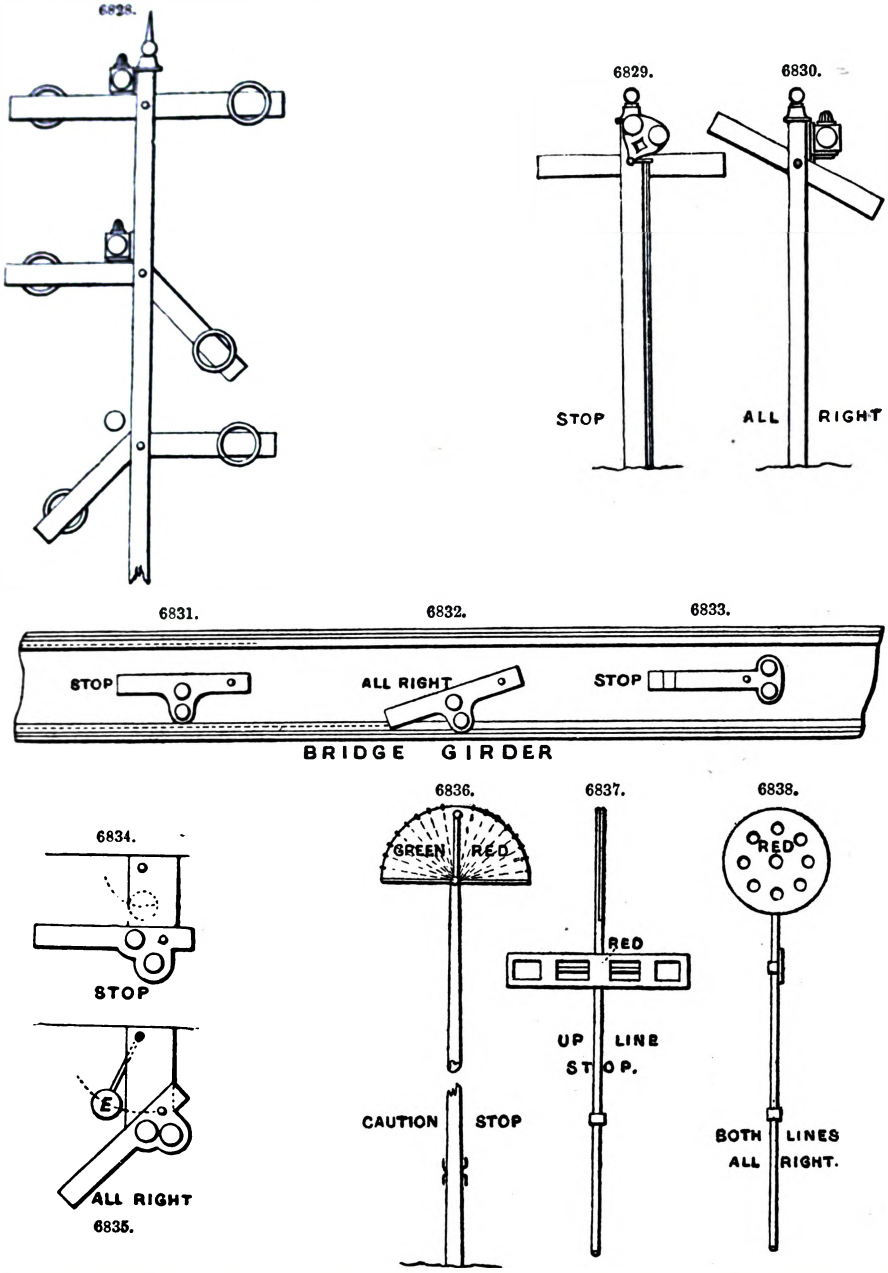

The fixed signals formerly in use on the Great Western were red and green flags stretched upon semicircular hoops attached to a mast, and drawn open and close by means of cords and pulleys, Fig. 6836; these were abandoned for the cross-bar and disc painted red, Figs. 6837, 6838, and fantail painted red on one side and green on the other, Figs. 6839, 6840. The down line cross-bar is distinguished from the up line by having two downward ears affixed to the ends of the bar. Junction signals have double discs and cross-bars, Figs. 6841, 6842. The fantail signal is considerably lower than the cross-bar, and is principally used for giving the caution, Fig. 6840; the danger is shown by Fig. 6839. The cross-bar and disc form has been proved to be the most clearly discernible at a great distance.

The Lancashire and Yorkshire Railway has spectacle discs fixed to masts which turn round, Figs. 6843, 6844; similar discs for distant signals are used on the Brighton line, but instead of turning round they are made to rise and fall by a balance weight on a short lever, Figs. 6845 to 6847.

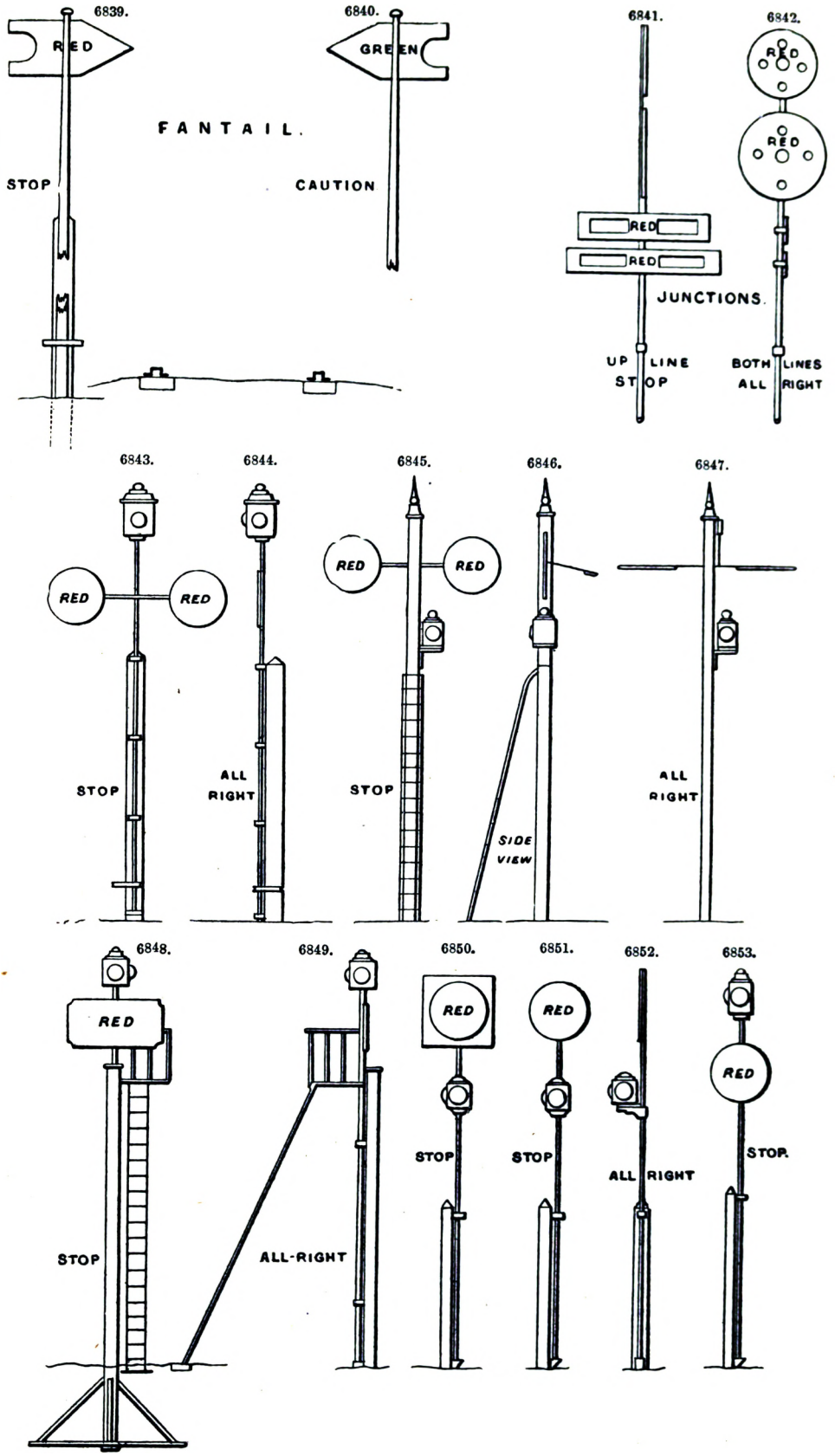
6839.
RED
STOP
6840.
GREEN
CAUTION
FANTAIL.
6841.
RED
RED
6842.
RED
RED
JUNCTIONS.
UP LINE STOP
BOTH LINES ALL RIGHT
6843.
RED
RED
STOP
6844.
ALL RIGHT
6845.
RED
RED
STOP
6846.
SIDE VIEW
6847.
ALL RIGHT
6848.
RED
STOP
6849.
ALL-RIGHT
6850.
RED
STOP
6851.
RED
STOP
6852.
ALL RIGHT
6853.
RED
STOP.

The distant signals of the Midland Railway consist of a rectangular board painted red and affixed to a turning post, Figs. 6848, 6849.

Circular and square discs are used on the North-Eastern Railway, Figs. 6850 to 6853.

The original signals of the South-Western were semi-discs placed on a pin within a ring, Fig. 6854, and capable of revolving by means of ropes and pulleys; those for the station and distant have the disc fixed to the ring, Figs. 6855, 6856, the mast being turned round. Branch-line signals have a wide green ring fixed round a lamp below the ordinary disc, Fig. 6857.

The forms of special signals are as various as the general ones; the following exhibit a few examples;—Fig. 6858 is a semaphore on the South London line; Figs. 6859, 6860, are used at the Broad-street station for starting trains; Figs. 6861, 6862, at the Camden goods shed, Chalk Farm; Fig. 6863, a signal on the Blackwall line; Figs. 6864, 6865, on the Brighton and South Coast.

Foot signals and lights attached to points to indicate their position

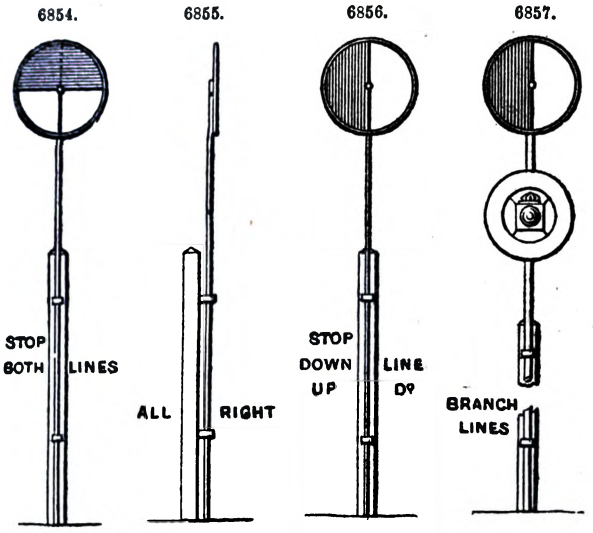

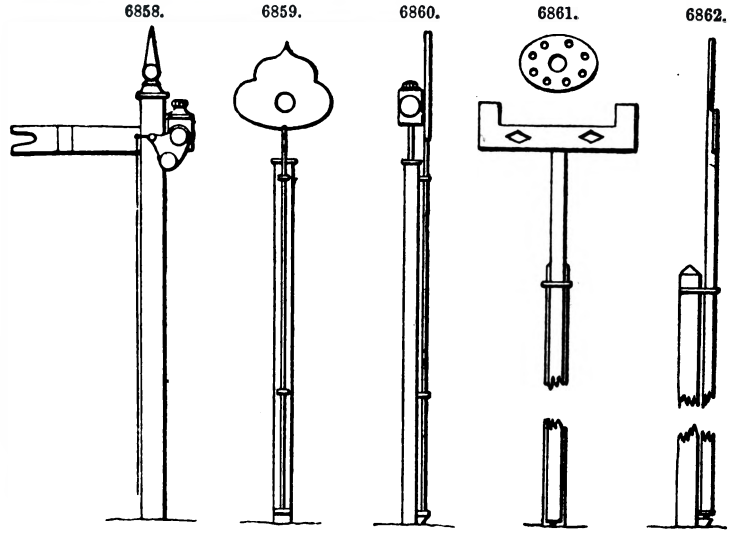

are extensively used and variously constructed, principally with small discs affixed to the top of the lamp, and which turn with the throw of the points, Figs. 6866 to 6868.

Several lines have adopted a platform starting signal, in most cases consisting of a miniature semaphore, worked from the cabins, and frequently in connection with a main signal beyond and outside the station. Where these are in use manual signals are prohibited, and no driver may start his train until the arm is lowered.

Many branch-line and other junctions have the points attached to an indicator, the invention of John Stevens, in 1862, Figs. 6869 to 6871, when they are not interlocked with the main signals, so that the drivers may see at some distance whether or not they are properly set. The points must be quite close to the rail to admit of the green or white light being seen. If the white light shows, the line is right

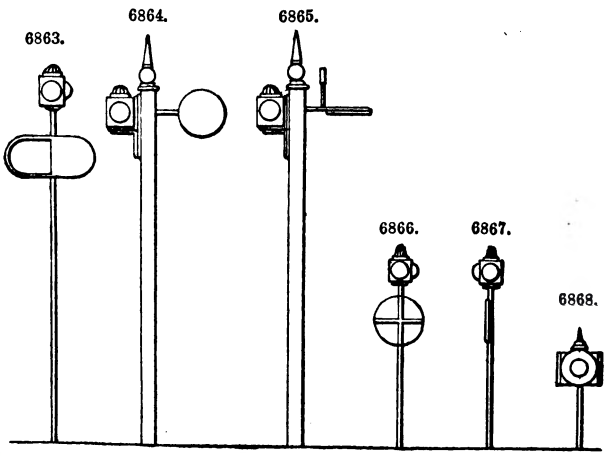

for the main line; if the green, it is clear for the branch; and if the red, the points are not in a position for either line.

Among the early attempts in signal construction, three may be noted as possessing some novelty. In 1838 a disc signal was in use at the Vauxhall Bridge, Birmingham, the invention of a Dr. Church; it was connected to the points and stood about 5 ft. high; two discs, 2 ft. in diameter, were fixed on the top at right angles to each other, and surmounted by a lamp showing two red lights, one blue and one white; the discs were painted with colours to correspond. In 1842 C. Hall introduced a system on the Great Eastern line; the signal consisted of five leaves placed in the shape of a fan on a mast, and coloured yellow, green, red, and white, Figs. 6874 to 6876; each leaf indicated the time a train had passed it; a green post was fixed

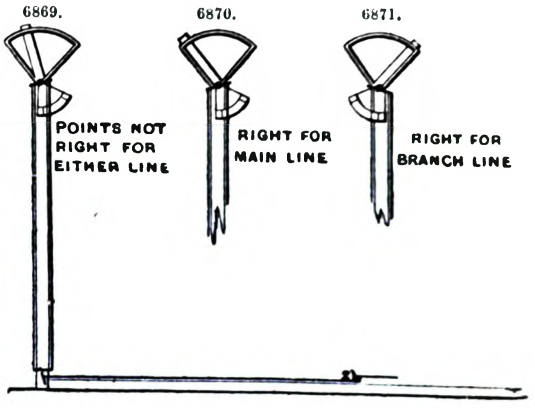

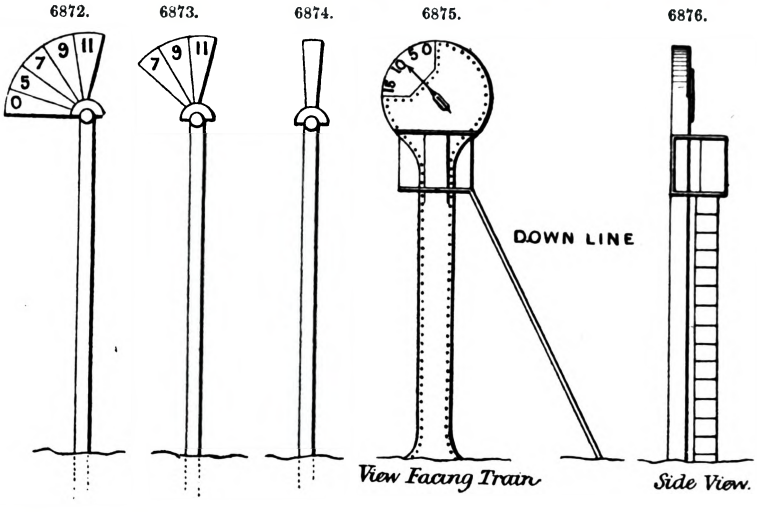

at the side of the line 100 yds. in advance of the signal, beyond which no train was to pass if the fan exhibited the red leaf; a green and white striped post was also fixed at a mile beyond the signal; and if the fan showed the seven or nine minute colour when passed, the driver might put on moderate or full speed on reaching the striped post. These signals were in use several years.

On the Greenwich Railway plain posts were fixed to each road at half a mile on either side of the junction, on reaching which the driver opened the engine whistle, and the switchman notified by hand-flags which train was to proceed on to the main line.

The construction of self-acting, or rather train-actuated signals, has claimed the attention of a very large proportion of inventors of signals, but very few systems have been tried, and many of those were found practically unreliable and therefore useless.

Whitworth's signals were used on the Brighton line, at some of the tunnels on the Lancashire and Yorkshire, Whiston Bank, near Liverpool, and several other situations. In 1858 Baranowski obtained permission to test his automaton distant signal between Hackney and Kingsland, on the North London line. It was set to danger by the passing train pressing down a lever which actuated the mechanism of the signal; and when the train reached a distance of 1100 yds. it pressed down another lever, causing the danger signal previously set to be released. Although many hundreds of trains successfully worked it, its failure on one occasion is supposed to have caused an accident which led to its being removed.

The Midland Company erected an indicator at Kegworth in 1863, Figs. 6875, 6876, showing the time a train had passed up to fifteen minutes. It was set in motion by a treadle being depressed by a passing train. At the expiration of fifteen minutes the pointer returned to zero. This signal was subsequently removed as unreliable.

So soon as the few inventions at all trustworthy for locking signals and points had proved their advantages over previous systems, they were rapidly adopted by many of the railway companies. It would be impossible in a limited space to explain and illustrate all the devices proposed for working these signals; but the following examples, among many equally good, will convey a clear idea of the methods introduced and in work.

Fig. 6877 is an example by Stevens, in 1854, for giving the three semaphore indications by one wire. A is a weighted lever connected by a rod with the arm and lamp. The lever is actuated by one of the levers R or S, and the wire and chain connection *f*. The drawing shows the signal in its normal state.

The caution signal is thus produced. The levers R, S, must be moved to the position R^1 S^1, lifting the lever A to the position A^1, where it will be retained by the stud fixed to apparatus on the lever A, which is brought into position by the stud *d* on the small lever. When the all-right signal is to be given the levers R, S, must be still further moved to the positions R^2, S^2, which will similarly move lever A to A^2, with its shorter end resting on the stop E, when the apparatus may be returned to its original position. To give the danger signal the stud on lever A during the return movement passes over the surface c^1 on lever *c*, the lever A being meanwhile supported by projection *g*.

6877.

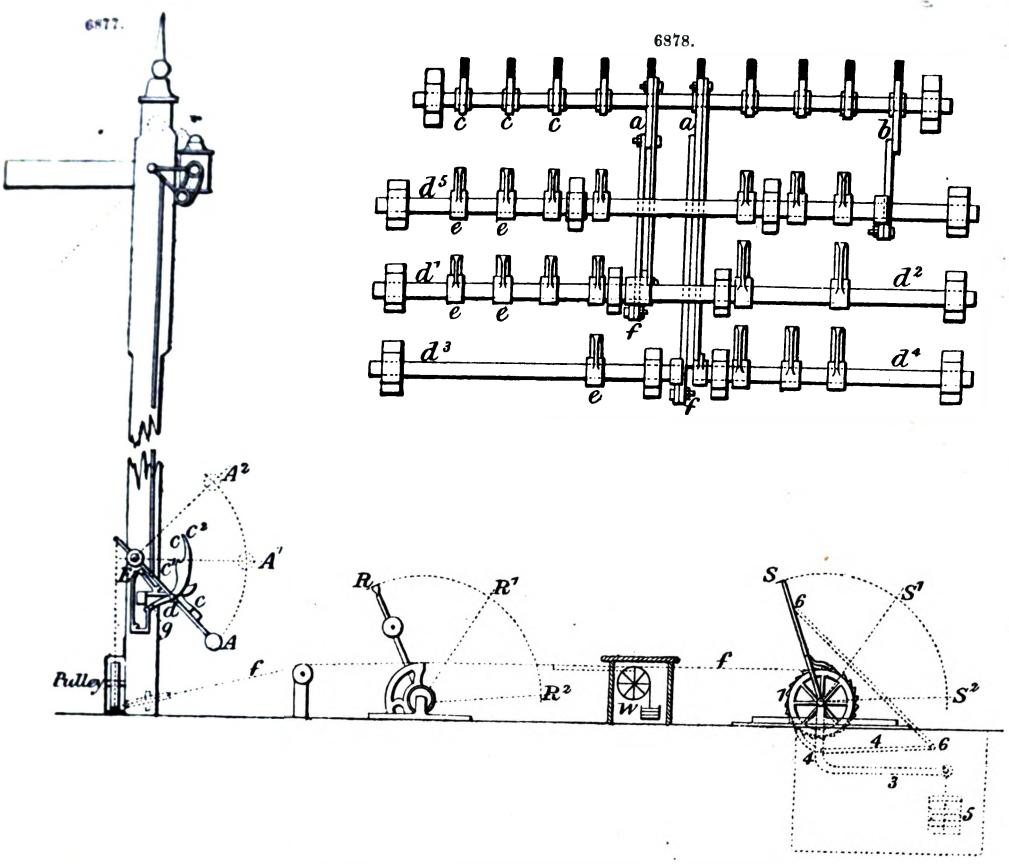

6878.

The chain or wire is attached to the periphery of the ratchet 1, turning freely on its axis. S is a lever, acting on the ratchet-wheel, which is retained in position by the weighted lever 3. This lever has a pawl 4, which takes the teeth of the ratchet-wheel, so as to retain it in its position. When pulled over by operator, 6 is a chain connecting the lever and pawl in order to release the pawl for the return movement.

Figs. 6878 to 6881 illustrate the invention of F. Brady, Engineer to the South-Eastern Railway.

Fig. 6880 is an end view of the apparatus. Fig. 6879 is front elevation of the same. *a*, *a*, are the two point levers of the main and branch lines; *b* is a lever which works both the points of the cross-over road; *c*, *c*, are levers connected with the several signals, having the name of the signal or point written upon them. d^1 to d^5 are horizontal spindles, on which the locking axes *e*, *e*, are fixed. *f*, *f*, are the moving cranks. They are shown in the position they occupy when the main lines are open and the branch closed. To each of the signal levers *c* there are jointed horizontal bars c^1, which are connected by links c^2 to the floor by means of shoes, in which the short links turn; the links so connected with each signal lever are

6879.

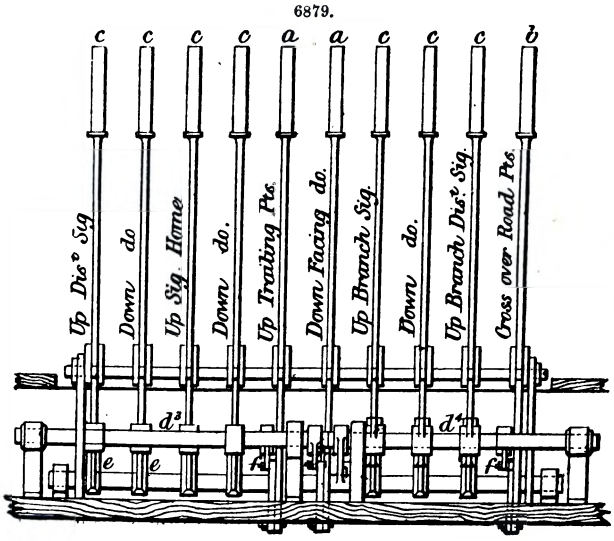

always parallel to the lever, and against them and against the levers the locking axes on the horizontal axes act. In the drawing the signal levers are as standing at danger, and consequently the point levers are all free. If the trailing point lever is moved from its present position to a position to suit trains coming from the branch on to the main line, it, by means of links connecting it with the arms f on the axes d^1, d^2, causes these axes partially to rotate, and in so doing it removes the locking axes from the links c^2 of such of the branch signals as may then be lowered, whilst at the same time it moves other locking axes, c, in front of the links c^2 of the main-line signal levers, which require to be held at danger. In a similar way the facing point lever, when moved over to suit trains entering on the branch line, gives motion to the axes d^3, d^4, and by means of the locking axes upon them unlocks such of the branch signals as may require to be lowered whilst it locks any of the main-line signals which require to be then maintained at danger. The point lever b of the cross-over road when moved over closes both the points of the cross-over road, and at the same time causes the axis d^5

6880.

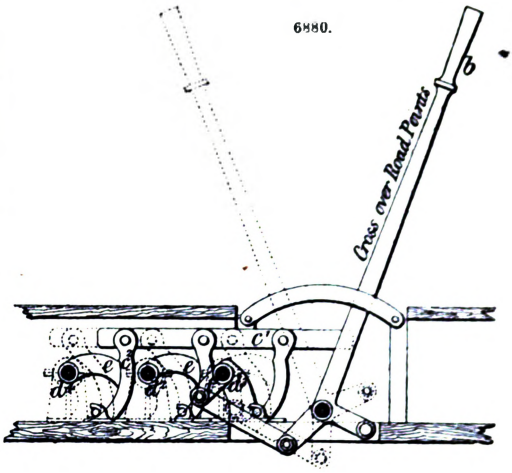

6881.

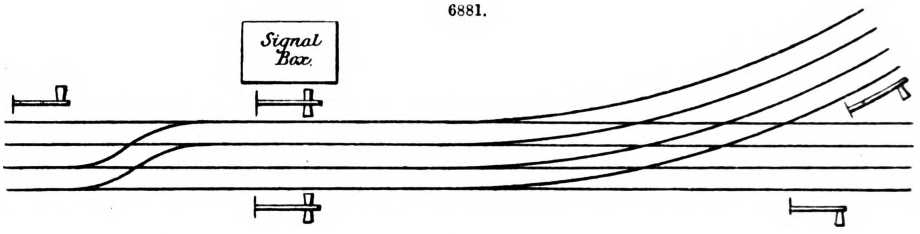

partly to rotate, and brings up the locking axes thereon so as to lock all the signal levers at danger.

This system is applicable at junctions where a greater number of point levers is required, each point lever in the manner described being caused to give motion to a separate axis or axes, with locking axes thereon to lock and free the signal levers.

Figs. 6882 to 6892 were introduced in 1867 by Saxby and Farmer.

Figs. 6882, 6883, also illustrate a method of actuating repeating signals when the distant is too far to be visible to the signalman.

The signalman, working in his box upon the distant signal lever, sets a wire in motion, one end of which is connected to the apparatus in the box, whilst the other is fastened on a cam f, the periphery of which is shaped to correspond to the duties assigned thereto. This cam consists of a pulley or roller f^1, upon which bears the chain p, and the wheel proper f, on the flat portion of the circumference of the latter bears a small roller connected with the cranked lever h. The wheel f revolves freely upon its axis i, fitted to the side of the post, and by the partial revolution of the wheel f the cranked lever h is acted upon, and one arm of this lever acts by a rod upon the semaphore or lamps. Suppose the cam-wheel to describe a limited arc of a circle, the signal denotes caution, and the chain p may be pulled as soon as the signal has spoken.

If the lever in the box is closed, and the signal denotes danger, the weights S cause the cam-wheel to turn, being attached to the circumference of the pulley K, which revolves freely on the axis i, and to maintain the distant signals at danger as a normal condition, the pulley k is furnished with a ring, projecting upon its side, upon which bears the axis of the lever h, and by the action of the weight S the danger position of the semaphore is preserved, as the lever h can act only if the axis of the

6882. 6883.

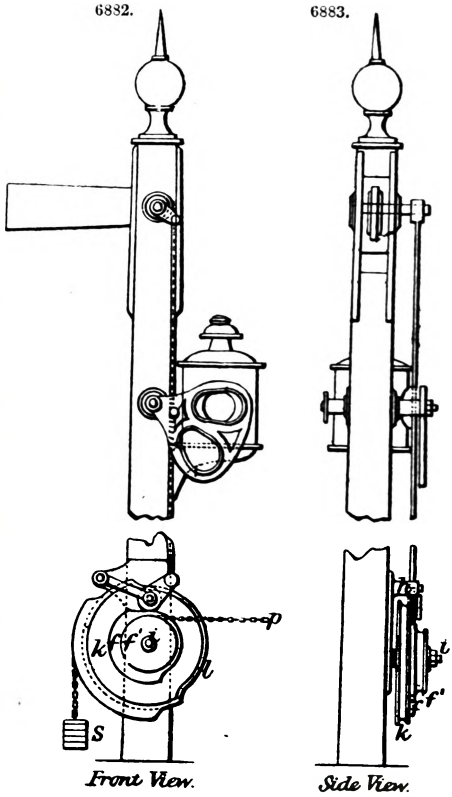

lever A is displaced by the motion of the wire *p*. By this plan one wire will actuate both distant and repeater signals.

Figs. 6884 to 6887 show a plan for a vertical motion of the locking between points and signals in cases where there may be little room. In this arrangement the slides and locks give way to circular stop-plates A B¹, A B², one of which is fastened to the bottom of the vertical shaft *n*, moved by the point lever No. 8; the other upon the hollow shaft *m*, enclosing *n*, and moved by the point lever No. 3. These two point levers describe here areas of circles in a horizontal direction, as will be easily understood, and the rods working the points themselves are fitted to the bottom of the solid or hollow shaft respectively. The circular plates A B¹, A B², are furnished with slot-holes or with notches in the edge corresponding to the holes or slots shown in the stop-plates, Figs. 6886, 6887.

Each signal lever is connected to a vertical rod W, worked in a manner

6884.

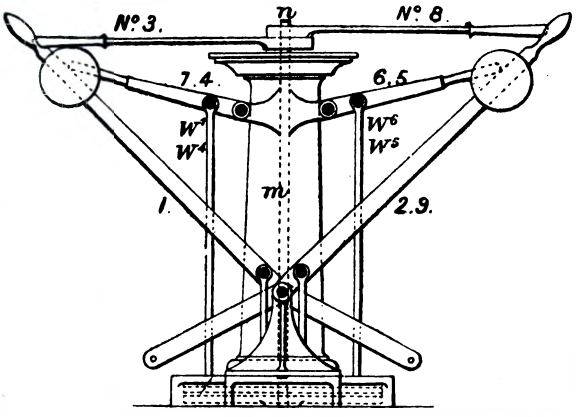

Elevation.

6885.

Plan on Top.

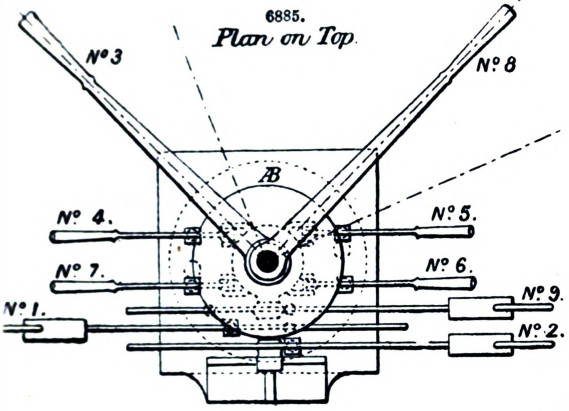

6886.

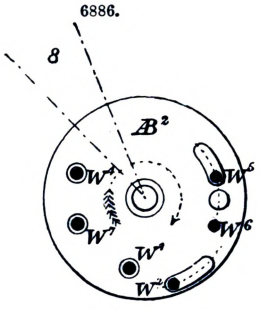

6887.

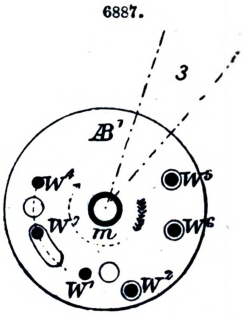

6888.

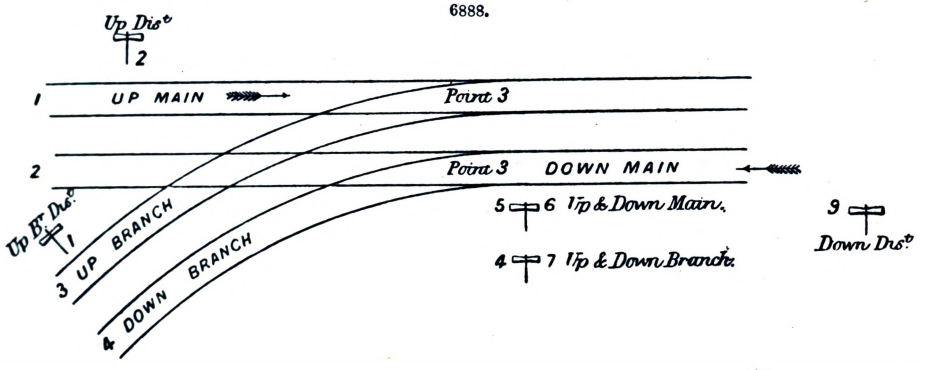

similar to a horizontal apparatus; but in combination with the point levers Nos. 3 and 8 in their respective connection with the stop-plates A B¹, A B², which they work.

Figs. 6888 to 6892 illustrate a horizontal apparatus, as generally used, for a junction, and also when extended in details for a large terminus. The following schedule shows the duty of each of the levers;—

Lever 1 actuates the distant signal of up branch line, 3.
" 2 " " " up main line, 1.
" 3 " the points of up lines, 1, 3.
" 4 " the station or junction signal of up branch line, 3.
" 5 " " down main " " 1.
" 6 " " " " " 2.
" 7 " " branch " " 4.
" 8 " the points of down lines 2, 4.
" 9 " the distant signal of down lines 2, 4.

This arrangement is for nine levers with three slides one over the other.

Fig. 6889 is a vertical section across the frame; the slides are marked A^1, A^2, A^3, each of which is connected with a certain number of main locks. Fig. 6892 shows slide A^1 in plan, with locks and pins. Figs. 6891, 6890, similarly show slides A^2 and A^3, and the whole of the levers are indicated only in Figs. 6890, 6892, where they are numbered in accordance with schedule. In Fig. 6889 the two point levers only are shown in elevation; the lever L being closed, or in its extreme position towards the front, and M open, or in its extreme position towards the back of the frame.

6890.

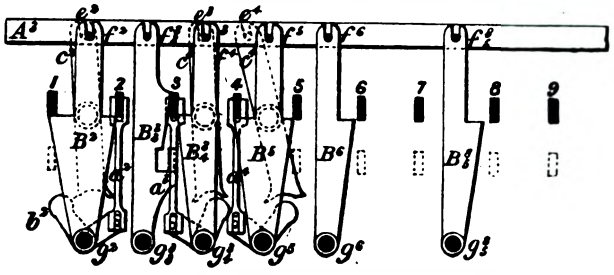

6891.

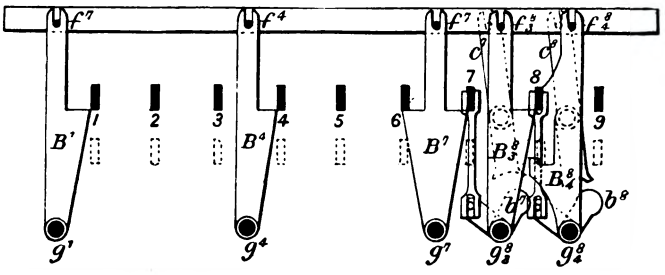

6892.

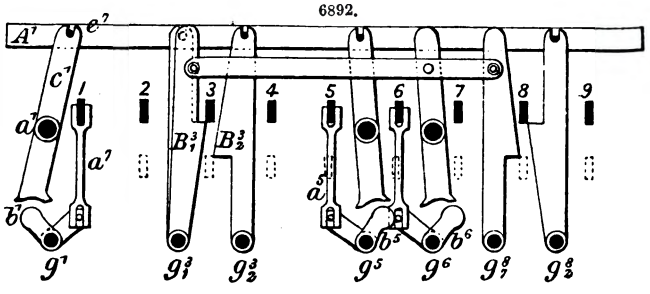

6889.

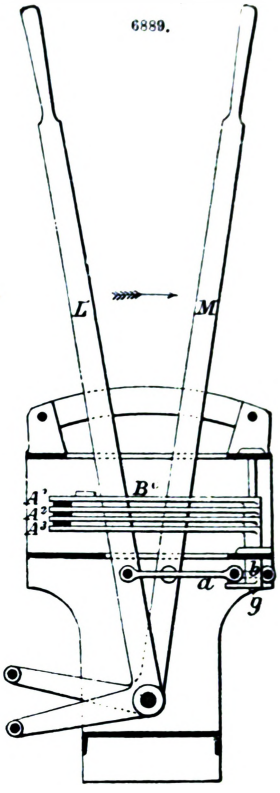

If the lever L is moved in the direction of the arrow, the forked lever *a* connected to L is set in motion; *a* again actuates the cranked lever *b*, one arm of which is connected with the forked lever *a*, whilst the other bears upon the concave surface of the lever arm *c*, and causes the latter to vibrate on its fulcrum *d*, in either direction; the other arm of the lever *c* bears by means of a fork-piece upon a pin *e*, fitted respectively to the top or bottom surface of any one of the slides A. The motion of the hand-lever L being thus communicated to the straight lever *c*; the latter in its turn imparts a longitudinal motion to the slide *a*.

The slides A are fitted with another series of pins *f*, fitting into the fork-shaped heads of the locks B, which are thus caused to describe arcs of circles in pivoting upon their axes *g*. The locks B are iron stop-plates cut at a right angle, upon one side of which the respective hand-lever bears when it gets into a certain position, which, it will be readily understood, takes place upon the locks, partially revolving or pivoting round their axes *g*. The inclined sides or planes are intended to assist the other mechanisms, seeing that the hand-lever bears upon such an inclined plane if its open position is converted into a closed one, and thus the shutting of the levers is facilitated and accelerated.

The general effect may be explained thus;—

By opening lever No. 1, then No. 3 is locked in its open and 8 fixed in its normal position.
" " 2, " No. 3 is locked in its normal position.
" " 3, " Nos. 2, 5, and 6, are locked in their normal positions, and 1 and 4 unlocked.
" " 4, " No. 3 is locked in its open and 8 in its normal position.
" " 5, " No. 3 is locked.
" " 6, " No. 3 is locked and 8 in its open position.
" " 7, " No. 8 is locked.
" " 8, " Nos. 1, 4, and 7, are locked, and 6 unlocked.

Signal lever No. 9 not being connected with the points is omitted in this schedule.

Fig. 6893, 6894, show a plan introduced by R. C. Roper in 1869. The advantages of this system are, that the locking is accomplished without any moving bolts, cranks, or screws, the long bars on the point levers which effect the locking are in sight, and the operator can see which levers can be moved and which cannot.

6893.

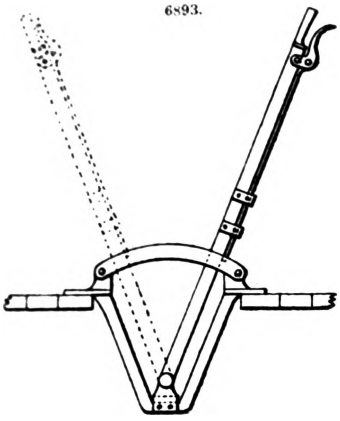

6894.

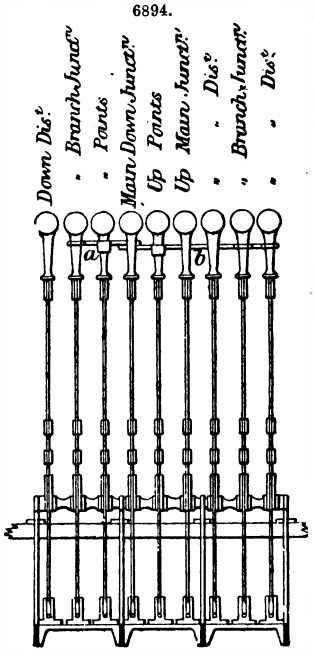

6895.

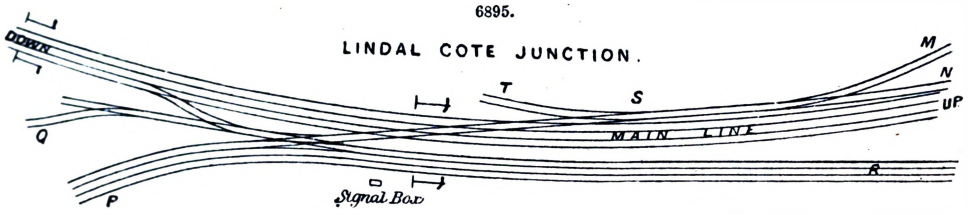

6896.

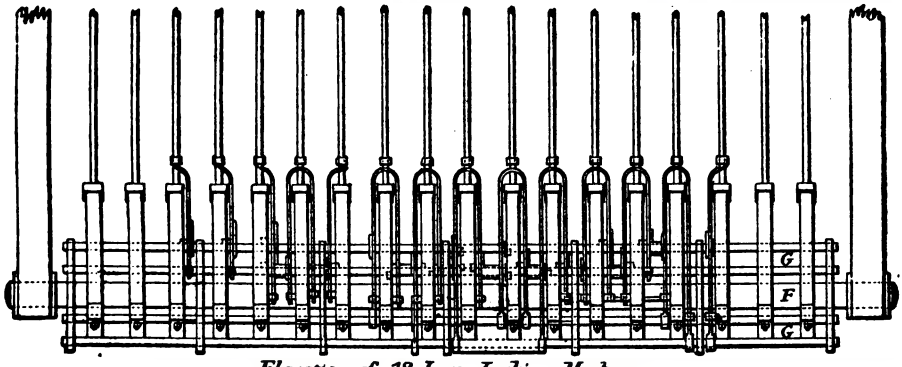

Elevation of 18 Lever Locking Machine

A bar is mounted on the point levers extending between the signal levers, dividing them into sets, and as respects each point lever in motion either way separating the signal levers, which must precede the point levers in their movements from the others. The levers are all arranged in a frame in the usual way; one side of the frame is termed permission for main line, and the other permission for branch line.

On each point lever is fixed a bar, the bar on one set being lower or higher than that on the other, extending as above described, and so coupled with the signal levers that if there be arranged on that side of the frame called permission for branch line all those signal levers belonging to the main line, and on the opposite side of the frame those signal levers which belong to the branch line, all the signals will be then at danger.

The bars on the point levers extend over the point levers in such a manner, that on either point

being brought over to one side of the frame, the bar upon it rests against those signal levers which ought to be locked by it when in this position, and the signal levers which are ranged on the other side of the frame are no longer locked by this lever.

The side of the frame which gives permission to the main line gives danger to the branch, and the reverse; but in no case can the signal levers be moved before the point levers.

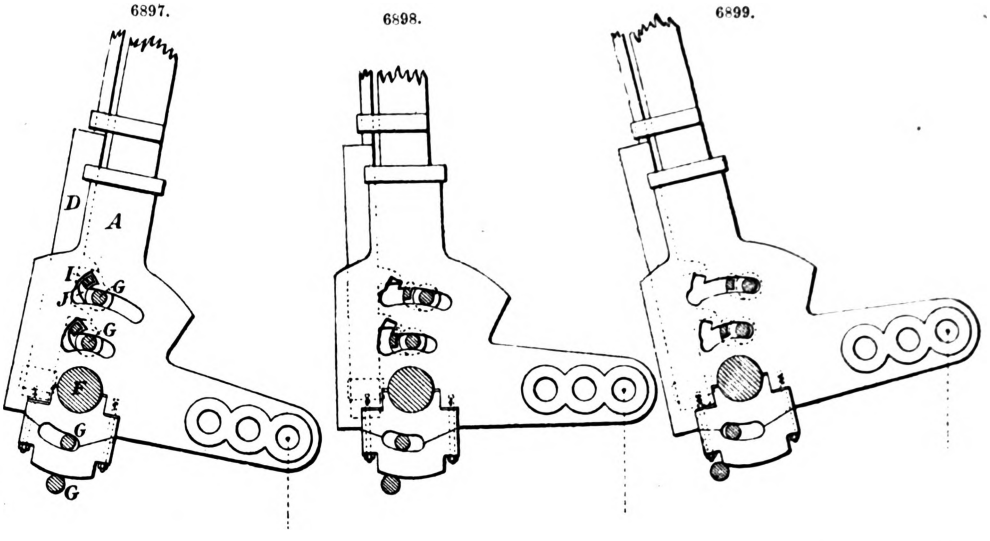

A system invented by Wm. Baines, Figs. 6895 to 6897, is in use at the somewhat complicated junction at Lindal Cote, it having a cross-over road running into both up and down main lines, two branch lines, M, N, on one side, and three lines, P, Q, R, on the other. There are catch-points at S on the up side, which have to be kept closed for the cross-over road and open for the catch-siding T, so that the main lines may not be fouled by traffic on the M and N lines; these catch-points can only be opened for the cross-over road when the signals have been set to danger for the main lines and the branch lines on the opposite side; consequently nine points and seven signals have to mutually interlock with the one set of points at S. Fig. 6895 is a plan of the junction; Fig. 6896 shows the elevation of the lever-frame for eighteen levers; Figs. 6897 to 6899 represent the rocking shafts G and main shafts F in various positions during the pull over. The levers are all centred on the shaft F, and above this is the shaft G, which passes through a quadrant arc in the foot of each lever A, thus allowing the required range of motion. On the shaft G are loosely slipped a number of short tubes or rockers J; these have cams upon them, which act against projecting tappets fixed one upon the bottom of each locking bar, and when the cam is held up under one of these tappets it prevents the bar from being pushed down, in which case the detent of that lever cannot be raised out of the quadrant notch. The practical result of this arrangement is, that before the lever has been moved $\frac{1}{8}$ in. in the quadrant the locking of the second lever is perfectly effected; the pressure upon the several parts is very small, and they do not require oiling.

The existing arrangements for working the traffic on the London Metropolitan Railway and at the Victoria and Cannon Street stations are good examples of the application of locking gear to signals and points, and the facilities for safety afforded thereby have been recognized by the English Board of Trade, and strong recommendations are embodied in the regulations issued by that department that all railway companies should adopt such means for the prevention of accidents.

SILVER. Fr., *Argent;* Ger., *Silber;* Ital., *Argento;* Span., *Plata.*

Silver is a white metal of remarkable brilliancy. It occupies the second rank for malleability, being next to gold in this respect. Its ductility and tenacity are also very great. One grain of the metal is capable of yielding 400 ft. of wire, and a wire with a diameter of $\frac{1}{12}$ in. will support a weight of about 188 lbs. Atomic weight = 108. Molecular weight = 216. Specific gravity = 10·53. Silver fuses at a temperature of about 1873° Fahr., and if allowed to cool slowly, it crystallizes in voluminous octahedrons. When in a state of fusion, it absorbs a considerable quantity of oxygen, which it expels in the act of solidification, with a peculiar sound technically known as spitting. It may be distilled by means of the oxy-hydrogen blow-pipe, and its vapours assume a green colour. The absorption of oxygen by silver in a state of fusion must be regarded as a simple solution of the oxygen in the liquid metal, and not as a combination. When allied with a small quantity of gold or copper it loses this property.

Silver is frequently met with in a native state, but not in sufficient quantities to satisfy the demand for it. The metal, as obtained for use, is chiefly extracted from its sulphide. The metallurgical operations necessary for this extraction are somewhat complicated; but they are based upon the fact that both lead and mercury have a strong affinity for silver. The sulphide of silver is converted into a double chloride of silver and sodium, which is then acted upon by mercury. The mercury then passes into the state of a chloride and liberates the silver, with which it forms an amalgam. From this amalgam the silver is extracted by evaporation. A more recent process depends upon the solubility of chloride of silver in a hot solution of common salt and its separation again on cooling.

In the first of these processes, which is known as the American method, amalgamation and reduction are carried on simultaneously, and the whole of the operation is performed without the application of heat. In the second process, which is practised at Freiberg in Saxony, amalgamation and reduction are two separate and distinct operations, and the chloridation is effected by means of heat.

Silver is naturally soft, but it becomes harder when allied with copper. It is for this reason that it is usually combined with small quantities of the latter metal in order to render it more capable of being conveniently worked. It is not affected by exposure to the air at any temperature, but it is rapidly oxidized by ozonized oxygen. Hydrosulphuric acid blackens silver by producing sulphide of silver and hydrogen.

$$\underset{\text{Silver.}}{\mathrm{Ag_2}} + \underset{\text{Hydrosulphuric acid.}}{\mathrm{H_2S}} = \underset{\text{Hydrogen.}}{\mathrm{H_2}} + \underset{\text{Sulphide of silver.}}{\mathrm{Ag_2S}}$$

Sulphuric acid attacks silver only when concentrated and at boiling heat; in this case sulphurous anhydride and sulphate of silver are produced.

$$\underset{\text{Sulphuric acid.}}{2\left(\begin{matrix}S\Theta_2\\H_2\end{matrix}\right)\Theta_2} + \underset{\text{Silver.}}{\mathrm{Ag_2}} = \underset{\text{Sulphate of silver.}}{\begin{matrix}S\Theta\\Ag_2\end{matrix}\Big\}\Theta_2} + \underset{\text{Water.}}{2\left(\begin{matrix}H\\H\end{matrix}\right)\Theta} + \underset{\text{Sulphurous anhydride.}}{S\Theta_2}$$

Nitric acids attack silver cold, but more especially when heated, producing nitrate of silver and binoxide of nitrogen.

$$\underset{\text{Nitric acid.}}{8\left(\begin{matrix}N\Theta_2\\H\end{matrix}\right)\Theta} + \underset{\text{Silver.}}{3\left(\begin{matrix}Ag\\Ag\end{matrix}\right)} = \underset{\text{Nitrate of silver.}}{6\left(\begin{matrix}N\Theta_2\\Ag\end{matrix}\right)\Theta} + \underset{\text{Water.}}{4\left(\begin{matrix}H\\H\end{matrix}\right)\Theta} + \underset{\text{Binoxide of nitrogen.}}{2N\Theta}$$

When at a red heat, silver decomposes hydrochloric acid, forming chloride of silver and liberating hydrogen.

$$\underset{\text{Silver.}}{\mathrm{Ag_2}} + \underset{\text{Hydrochloric acid.}}{2\left(\begin{matrix}H\\Cl\end{matrix}\right)} = \underset{\text{Hydrogen.}}{\mathrm{H_2}} + \underset{\text{Chloride of silver.}}{2\left(\begin{matrix}Ag\\Cl\end{matrix}\right)}$$

A prolonged contact of silver with a solution of chloride of sodium gives rise to the formation of a certain quantity of double chloride of silver and sodium, which dissolves, and the liquor becomes alkaline.

Silver forms with each of the monatomic metalloids a single compound. There are known a chloride, a bromide, an iodide, and a fluoride of silver.

Chloride of Silver, $\begin{matrix}Ag\\Cl\end{matrix}\Big\}$.—Chloride of silver exists in a native state crystallized in octahedra. As it is insoluble, it may be readily obtained by precipitating the solution of a salt of silver by hydrochloric acid, or by a soluble chloride.

$$\underset{\text{Nitrate of silver.}}{\begin{matrix}N\Theta_2\\Ag\end{matrix}\Big\}\Theta} + \underset{\text{Hydrochloric acid.}}{\begin{matrix}H\\Cl\end{matrix}\Big\}} = \underset{\text{Chloride of silver.}}{\begin{matrix}Ag\\Cl\end{matrix}\Big\}} + \underset{\text{Nitric acid.}}{\begin{matrix}N\Theta_2\\H\end{matrix}\Big\}\Theta}$$

The chloride of silver forms in this case a white flocculent mass. Chloride of silver is absolutely insoluble in pure water. At a temperature of 50° Fahr. salt water dissolves a quantity equal to $\frac{17}{10000}$ of the weight of the salt which it contains; at 64°, $\frac{24}{10000}$; at 212°, $\frac{40}{10000}$; and at 32°, hardly any. Chloride of silver dissolves readily in hyposulphite of soda, cyanide of potassium, and ammonia; hydrochloric acid also dissolves it, but only in very small quantities. By evaporation from its ammoniacal or hydrochloric solution, chloride of silver crystallizes in octahedra identical with the natural crystals. The chemical rays of the spectrum exert a strong action upon this chloride. When exposed to the direct rays of the sun, it immediately becomes violet; in a diffuse light, the colouration manifests itself more slowly. When exposed to a red or a yellow light, which does not contain any chemical rays, it retains its white colour. At a temperature of 500°, chloride of silver fuses; on cooling it assumes the appearance of horn, and is sufficiently soft to be capable of being cut with a knife. In this state it is known as horn silver. At a very high temperature it gives off vapours. Nascent hydrogen reduces chloride of silver cold, and free hydrogen reduces it with the application of heat. In the latter case, however, traces of chloride always escape the reducing action; this fact, which has been clearly proved by Lieben, renders all analytical processes founded upon this reduction incorrect. When not in a state of fusion it is reduced by iron and by zinc. If a little moist chloride of silver be put together in a heap, and an iron rod placed in the centre, reduction is effected slowly from the centre outwards. Mercury reduces chloride of silver, as does also the protochloride of copper.

$$\underset{\text{Protochloride of copper.}}{Cu_2Cl_2} + \underset{\text{Chloride of silver.}}{2AgCl} = \underset{\text{Bichloride of copper.}}{2CuCl_2} + \underset{\text{Silver.}}{\mathrm{Ag_2}}$$

When chloride of silver is boiled in a concentrated solution of potassa, oxide of silver is formed, and if sugar has been added to the solution, silver is obtained in an extremely pure state. Heated to a white heat, with carbonate of potassa and marine salt, it is reduced and gives a button of metallic silver. The marine salt renders the scoria more easily detachable.

$$4\left(\begin{matrix}Ag\\Cl\end{matrix}\right) + 2\left(\begin{matrix}C\,\Theta\\K_2\end{matrix}\right)\Theta_2 = 2\,C\,\Theta_2 + \begin{matrix}\Theta\\\Theta\end{matrix} + 2\left(\begin{matrix}Ag\\Ag\end{matrix}\right) + 4\left(\begin{matrix}K\\Cl\end{matrix}\right)$$

Chloride of silver. — Carbonate of potassa. — Carbonic anhydride. — Oxygen. — Silver. — Chloride of potassium.

The metallic sulphides, especially those of the electro-positive metals, give the double decomposition with chloride of silver.

Bromide of Silver, $\begin{matrix}Ag\\Br\end{matrix}\}$.—Bromide of silver is found in a native state, and may be obtained by the same processes as the chloride, nearly all the properties of which it possesses. It is distinguished from the chloride by a less degree of solubility in ammonia, and by the action which light exerts upon it; for when prepared by artificial light it is white, but if exposed to the diffuse light of day, it instantly becomes of a yellow hue, and it keeps this tint without alteration, whatever be the intensity of the light to which it may afterwards be exposed. Bromide of silver is found in Mexico, where it is known as Plata verte, or green silver, in the form of small crystals or crystalline granules of a pale olive-green tint.

Iodide of Silver, $\begin{matrix}Ag\\I\end{matrix}\}$.—Iodide of silver is prepared in the same way as the chloride and bromide, and like the latter compounds, it exists in a native state. It is hardly soluble in ammonia; light affects it very readily, causing it to change from the yellowish tint which is its natural colour, to bister, and then to black. Iodide of silver occurs native in several Mexican mines in the form of thin, pearly, flexible scales.

Silver forms several compounds with the diatomic metalloids. With sulphur it forms a sulphide corresponding to the formula Ag_2S. With oxygen, it gives three compounds, the suboxide $Ag_4\Theta$, the protoxide $Ag_2\Theta$, and the binoxide $Ag_2\Theta_2$. Of these three oxides, the protoxide alone possesses any interest.

Sulphide of Silver, $\begin{matrix}Ag\\Ag\end{matrix}\}$ S.—Sulphide of silver occurs native, sometimes crystallized in cubes, and sometimes in masses. This is the principal ore of silver. It may be obtained artificially by precipitating a salt of silver by hydrosulphuric acid.

$$2\left(\begin{matrix}N\,\Theta_2\\Ag\end{matrix}\right)\Theta + \begin{matrix}H\\H\end{matrix}\}S = 2\left(\begin{matrix}N\,\Theta_2\\H\end{matrix}\right)\Theta + \begin{matrix}Ag\\Ag\end{matrix}\}S$$

Nitrate of silver. — Hydrosulphuric acid. — Nitric acid. — Sulphide of silver.

Sulphide of silver is naturally black; but when it has been fused or raised to a high temperature, it assumes a metallic appearance. Native sulphide always has this appearance, and hence it has received from mineralogists the name of silver glance. Its specific gravity is 7·2. When subjected to roasting, sulphide of silver loses sulphurous anhydride and leaves metallic silver. If roasted with marine salt, it is converted into chloride; it is also converted into the latter substance if allowed to remain a long time in contact with bichloride of copper.

Protoxide of Silver, $\begin{matrix}Ag\\Ag\end{matrix}\}\Theta$.—This oxide is obtained in the form of a brown and heavy powder by precipitating a salt of silver by hydrate of soda or potassa. In this case, a hydrate $\begin{matrix}Ag\\H\end{matrix}\}\Theta$ should be produced; but as this hydrate is not stable, protoxide results.

$$2\left(\begin{matrix}N\,\Theta_2\\Ag\end{matrix}\right)\Theta + 2\left(\begin{matrix}K\\H\end{matrix}\right)\Theta = 2\left(\begin{matrix}N\,\Theta_2\\K\end{matrix}\right)\Theta + \begin{matrix}Ag\\Ag\end{matrix}\}\Theta + \begin{matrix}H\\H\end{matrix}\}\Theta$$

Nitrate of silver. — Hydrate of potassa. — Nitrate of potassa. — Protoxide of silver. — Water.

Oxide of silver readily decomposes into oxygen and metallic silver when heated. It is a powerful basic anhydride, dissolving in the acids, and forming normal salts with them. Water dissolves it in the proportion of $\frac{1}{3000}$, sufficient to decompose the soluble haloid salts and the phosphates. By digesting oxide of silver with ammonia, an explosive compound is obtained, known as fulminating silver, the formula of which has not yet been determined with certainty. Some consider it to be a substance corresponding to the formula $\begin{matrix}Ag\\H\\H\end{matrix}\}N$, while others believe it to be a triargentic nitride $\begin{matrix}Ag\\Ag\\Ag\end{matrix}\}N$.

Nitrate of Silver, $\begin{matrix}N\,\Theta_2\\Ag\end{matrix}\}\Theta$.—Nitrate of silver is prepared by dissolving silver in boiling nitric acid. If the silver employed be pure, the nitrate will be pure also; but if the silver contain copper the nitrate will be a mixture of nitrate of silver and nitrate of copper. The best process of purification in this case consists in evaporating till dry, and then fusing the residue, and keeping it in a state of fusion for some time. The nitrate of copper decomposes into oxide of copper and volatile products, and if the temperature is not too high, the greater portion of the nitrate of silver remains intact. A small portion of the mass is taken out from time to time and dissolved in water; after filtering, ammonia is added to the liquor. So long as this reagent produces a blue tint, there remains intact nitrate of copper; when the ammonia ceases to have any effect, the decomposition of that salt is complete. The whole mass, after being allowed to cool, is dissolved, and filtered to separate the oxide of copper, and then evaporated to the consistency of a thick syrup. The nitrate of silver crystallizes on the cooling of the liquor. Another process is to evaporate till dry, then to fuse the salt and to cast it upon porcelain, or in small wrought-iron moulds. Under the latter form it is employed in medicine, and known as lunar caustic.

Instead of decomposing the nitrate of copper in the manner we have described, it is usual, in laboratories, as being more simple, to treat the mixture of the two salts with a soluble chloride, which precipitates the silver alone as a chloride. This chloride, after being well washed and dried, is heated in a crucible to a white heat, carbonate of potassa and marine salt having been previously added. A button of very pure silver is then formed, which may be taken out of the crucible by breaking the latter after it has been allowed to cool. This button, dissolved in nitric acid, gives very pure nitrate of silver.

Nitrate of silver crystallizes in beautiful rhomboidal flakes, especially by evaporation from its acid solutions. Its crystals are transparent. When fused, it presents the aspect of a white mass of crystalline structure. As it is decomposed by heat, giving metallic silver, it becomes of a blackish colour after having been subjected to repeated fusions. When cast in the form of lunar caustic there always remain residues, which are melted a second or even a third time. These residues therefore assume the colour often possessed by lunar caustic.

The solution of nitrate of silver is decomposed by hydrogen, as it would be by a metal, such as zinc; nitric acid is formed, and the silver is deposited.

$$\underset{\text{Nitrate of silver.}}{2\left(\begin{matrix}N\Theta_2\\Ag\end{matrix}\right\}\Theta)} + \underset{\text{Hydrogen.}}{\begin{matrix}H\\H\end{matrix}\Big\}} = \underset{\text{Nitric acid.}}{2\left(\begin{matrix}N\Theta_2\\H\end{matrix}\right\}\Theta)} + \underset{\text{Silver.}}{\begin{matrix}Ag\\Ag\end{matrix}\Big\}}$$

Nitrate of silver is decomposed by organic substances under the influence of light.

Distinctive Features of the Salts of Silver.—The soluble salts of silver are distinguished by the following features;—

1. They are always colourless when the elements of no coloured acid enter into their composition, and they are generally blackened by exposure to light.

2. Hydrochloric acid and the soluble chlorides produce in their solutions a white flocculent precipitate of chloride of silver which is not attacked by the acids, but which dissolves very readily in ammonia, cyanide of potassium, and hyposulphite of soda. This precipitate assumes a violet hue when exposed to the light.

3. The soluble arsenites and phosphates determine in them the formation of a light yellow precipitate of phosphate or arsenite of silver, soluble in ammonia and in acid liquors.

4. The arseniates produce in them a red precipitate of arseniate of silver.

5. Sulphuretted hydrogen gives with them a black precipitate of sulphide of silver, which is insoluble in hydrosulphate of ammonia, but which is readily converted into nitrate of silver by nitric acid.

6. The fixed alkalies give with the salts of silver a brown precipitate of oxide of silver. This precipitate when placed in contact with ammonia becomes black, and acquires explosive properties.

7. The soluble iodides convert the soluble salts of silver into iodide of silver, which is precipitated. This iodide is of a yellowish colour, easily affected by light, and nearly insoluble in ammonia; it is, however, readily soluble in hyposulphite of soda and cyanide of potassium. Boiling nitric acid decomposes it slowly, forming nitrate of silver, and liberating violet-coloured vapours of iodine.

Native Silver sometimes occurs in a state of almost chemical purity, but it is more frequently associated with some other metal or metals. Native silver is often found in connection with various argentiferous ores, and has sometimes been met with in masses of considerable size. It is found both crystallized and in arborescent and filiform shapes.

The alloys of silver and gold are exceedingly numerous, and although native gold has never been found free from silver, it is in some cases alloyed with that metal to such an extent, that the resulting compound can only be regarded as native silver containing traces of gold. Silver obtained from the treatment of ordinary argentiferous ores frequently contains gold, but generally speaking in small quantities only. In some districts, however, as at Virginia City in Nevada, one-third of the value of the bullion produced arises from the amount of gold which it contains.

Antimonial Silver.—Discrasite occurs in Baden, Suabia, Chili, and elsewhere; but seldom in sufficient quantities to possess great commercial value. Colour, silver white; composition, antimony 23, silver 77 per cent. Heated before the blow-pipe, gives off fumes of antimony.

Bismuth Silver.—A rare alloy of silver and bismuth, with a little copper and arsenic; occurs in the mine of San Antonio, near Copiapo, Chili. It contains 60 per cent. of silver.

Native Amalgam is found in the Palatinate, at Sala in Sweden, Almaden in Spain, and in various mines in Chili. It is frequently crystallized, of a silver-white colour, is brittle, and emits a grating sound when cut. There are two known varieties. The first is composed of silver 34·8, mercury 65·2, and the second of silver 26·25, mercury 73·75 per cent.

A silver amalgam of some commercial importance is found in the mines of Arqueros in Chili, and has been hence named Arquerite. It consists of silver 86·49, mercury 13·51 per cent.

Ores.—The ores of silver which occur in greatest abundance, and which are consequently the most important, are the following;—

Silver Glance.—Vitreous Sulphide of Silver.—This is the most important ore of silver, and contains, when pure, silver 87·04, sulphur 12·96 per cent. It is found in Europe in the German mines. It is also abundant in the mines of America.

Stephanite.—Brittle sulphide of silver is the ore of next greatest importance. This is a double sulphide of silver and antimony, containing, when pure, silver 70·4, antimony 14·0, and sulphur 15·6 per cent. It is found in nearly all the silver mines of Europe, and occurs abundantly in America, and particularly in the Comstock lode, Nevada.

Pyrargyrite.—Ruby Silver.—An important ore in the Mexican mines, as well as of those in the Reese River district in Nevada. It is composed of the same substances as stephanite, but in different proportions. When pure, its composition is, silver 58·98, antimony 23·46, and sulphur 17·56 per cent.

Chloride of Silver.—Horn Silver.—This ore is composed of silver 75·33, chlorine 24·67 per cent. It is found in most of the silver mines both of Europe and America, and occurs in greatest abundance near the outcrops of the veins. It fuses in the flame of a candle, giving off acrid fumes; and if moistened and rubbed with a piece of iron or zinc, becomes externally coated with a thin film of metallic silver. With a little carbonate of soda it is readily reduced before the blow-pipe, and affords a button of silver.

In addition to the foregoing, which yield the larger proportion of the total amount of silver annually produced, there are numerous other minerals containing this metal, but which, from their rarity, may be regarded rather in the light of mineralogical curiosities than as ores of silver. A large amount of silver is likewise extracted from galena, with which it is associated in the form of sulphide.

Few metals enter into a greater variety of natural combinations, or are found over a wider geological range, than silver. It is said to exist in minute traces in some organic bodies, and in the waters of the ocean. A certain amount of this metal invariably accompanies native gold, and it would be almost as difficult to find a specimen of galena from which traces of silver could not be extracted, as to meet with native gold entirely free from it.

The whole of the silver of commerce is derived from three sources;—

From silver ores proper, in which this metal predominates in value over those with which it is associated.

From refining the native alloys of gold and silver. And

From the desilverizing of lead, and the treatment of certain argentiferous copper ores.

Treatment of Silver Ores.—It has been found that the ores of silver, with the exception of argentiferous galenas, do not generally admit of mechanical concentration, and they are consequently, after careful selection, in most cases subjected to metallurgical treatment. The difficulty of treating ores of silver by mechanical means arises from the fact of the greater portion of this metal being finely disseminated in the veinstone in the form of various brittle sulphides, which, on the pulverization of the ores, become so finely divided as to float off in suspension in the water employed for concentration. It must be borne in mind that, even had the results obtained by mechanical preparation been more favourable than they have been generally found to be, the supply of water in the districts affording a great proportion of the ores of this description, is exceedingly limited, and that the inconvenience and expense attending the dilution of the argentiferous mineral by a large quantity of silicious and earthy matter is less than the cost and trouble that would be entailed by their concentration.

Patio Process.—The materials necessary for the reduction of the ores of silver by the patio process are magistral, common salt, and mercury; but in addition to these, sulphate of copper, precipitated copper, and copper and zinc amalgams are occasionally employed.

Magistral is manufactured from copper pyrites, or raw magistral, of which mines occur in many parts of Mexico.

The copper ore, when brought to the works, is first reduced to a coarse sand by dry stamping, and then ground to a fine powder in arrastres. The ground ore is removed from the arrastre to an enclosure, where the water with which it has been mixed during the process of grinding is allowed to evaporate; it is then left exposed for a long time to atmospheric influences, as it is generally believed to afford a larger proportion of sulphate of copper by roasting, if previously exposed for some months to the action of the air. The furnaces in which the calcination is effected have a double hearth, of which the roof is almost flat, with a fire-place at the side.

About 200 lbs. of ground ore, with which a few handfuls of salt have been previously mixed, are charged on each hearth. The heat is then gradually raised, and the ore kept constantly stirred during from six to eight hours, when the doors are closed, and the furnace allowed to cool. When sufficiently cold, the doors are again opened, and the charge raked through holes in the bottom of the furnace into arched recesses beneath, prepared for its reception. The percentage of sulphate of copper formed, from an ore of given tenure in copper, depends, to a great extent, on the skill of the workman, and the care bestowed on the operation.

When the ores treated contain either oxide or carbonate of copper, it is usual to add to them a certain amount of iron pyrites, which, by supplying sulphur, assists in their conversion into sulphates. The sulphate thus obtained, being in an anhydrous state, becomes heated on the absorption of water, and this circumstance is taken advantage of for the purpose of making a rough estimate of the quality of prepared magistral, and determining the proportion it will be necessary to employ.

The ores subjected to patio amalgamation differ somewhat in their composition; but the following analysis gives the average composition of ore from the district of La Luz, Guanaxuato;—

Sulphide of silver	0·15	Peroxide of manganese	3·54
„ iron	26·52	Carbonate of lime	4·18
„ lead	2·07	„ magnesia	0·96
„ arsenic	0·10	Silica	50·00
„ zinc	5·00	Moisture	6·10
Sulphate of iron	0·25		
„ lime	0·43		100·00

The ores to be subjected to the process of patio amalgamation are first crushed dry, to the state of coarse gravel in a stamping mill, and subsequently reduced by porphyrization with mercury in the arrastre to the necessary degree of fine division.

As the operation of grinding progresses, the amalgam by degrees accumulates in the crevices in the bottom of the arrastre. The amalgam is usually removed from the arrastres every three months; but in some instances they are cleaned up at even longer intervals. At the expiration of twenty-four hours, when the grinding is completed, slime is baled out into a barrel, in which it is

removed to reservoirs, formed in masonry, from which a portion of the water becomes evaporated by exposure to the sun and air, and leaves the mass in a fit condition for subsequent treatment in the patio.

The patio is a large courtyard, generally paved with flagstones, of which the joints are carefully cemented, in order to prevent the loss of mercury which would otherwise take place. This flooring has a slight inclination given to it, in order that any water falling on it may the more readily run off. In some cases, however, a wooden flooring is employed instead of a stone one. Fig. 6900 represents the patio at Guanaxuato.

6900.

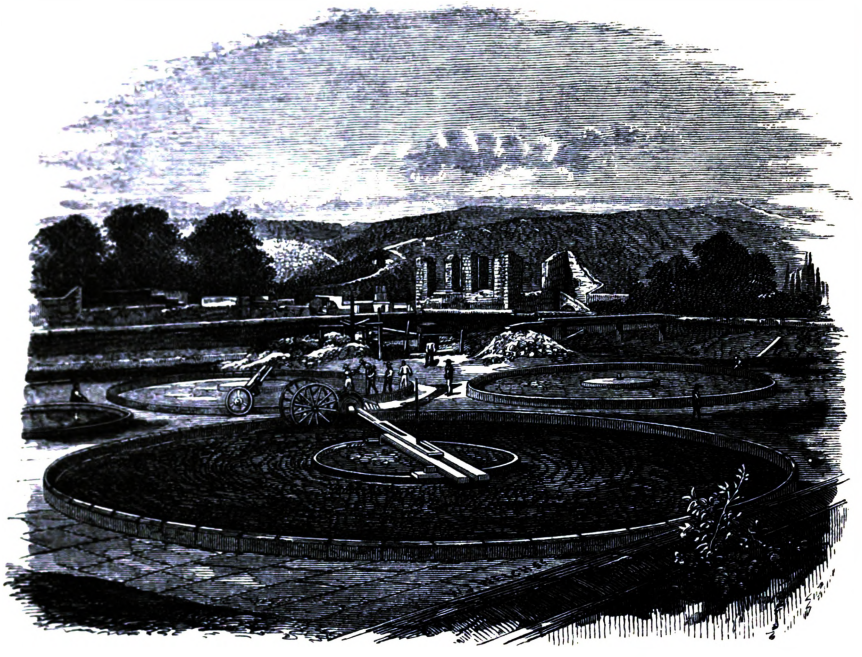

The ground slimes, on their removal from the arrastres, are deposited, in an almost liquid state, in walled receivers, where a portion of the water is removed by evaporation, and where it is allowed to accumulate until there is a sufficient quantity to form a heap. When the amount of slimes necessary for a heap has been collected in the receiver, it is carried out into an enclosure formed on the patio, about 30 ft. in diameter, generally made by laying on each other square beams of wood, kept in their places by large stones, and made tight by filling the joints either with clay or horse-dung. Into this the slime is introduced, until it forms a layer of about a foot in thickness, and is allowed to remain until, by the evaporation of the water, it has gained the consistency of a rather thin mud. From 3 to 5 per cent. of salt is added, in accordance with its quality and the nature of the ores under treatment. When the salt has been added to the heap or torta, it receives the first treading by mules, after which it is allowed to stand until the following day, when the whole of the salt will be found in a state of solution, and thoroughly mixed with the slimes composing the heap.

The day after the salt has been thus mixed with the slimes, the addition of magistral and mercury takes place. For this purpose the torta is, if necessary, brought to the proper consistency by the addition of water, and the magistral thrown evenly over its surface by means of wooden shovels. The proportion of this reagent to be added varies, to a certain extent, in accordance with its richness in sulphate of copper; but in the case of employing magistral of the usual strength, something less than 1 per cent. is generally found sufficient. As soon as the magistral has been spread over the surface of the heap, it is again trodden by mules for about an hour, when the mercury necessary for the completion of the operation is generally added, the quantity required being from 3½ to 4 lbs. for every mark of silver supposed to be contained in the heap. The introduction of mercury is effected by making it run through a linen cloth in such a way that its particles may be divided in the state of minute globules. After the addition of the mercury, the heap is again trodden for about four hours, in order to effect its intimate mixture throughout the whole mass. When crystallized sulphate of copper is employed in lieu of magistral, from 7 to 9 lbs. are added for each ton of ore contained in the heap.

The treading of a torta has the effect of stimulating the action of the magistral, and is repeated every alternate day as often as the samples indicate a necessity for doing so. Formerly, the mercury was not all introduced at once. It is, however, now usual to add all the mercury immediately after the introduction of magistral.

The treading tortas or heaps is effected by means of mules or horses, the former being most frequently employed, and is repeated every alternate day until the operation is completed; in some cases they are made to drag behind them a framework on wheels, which acts in the same way as the ordinary mortar mill. When this is employed, it is attached to a long wooden arm revolving

on a spindle in the centre of the torta, and in order to allow of the radius being gradually diminished, the arm is provided with slots, in which the central pin readily traverses. In addition to the treading, each heap is turned over twice a week by means of wooden shovels.

The washing apparatus consists of three circular tanks B, C, and D, Fig. 6901, built close

6901.

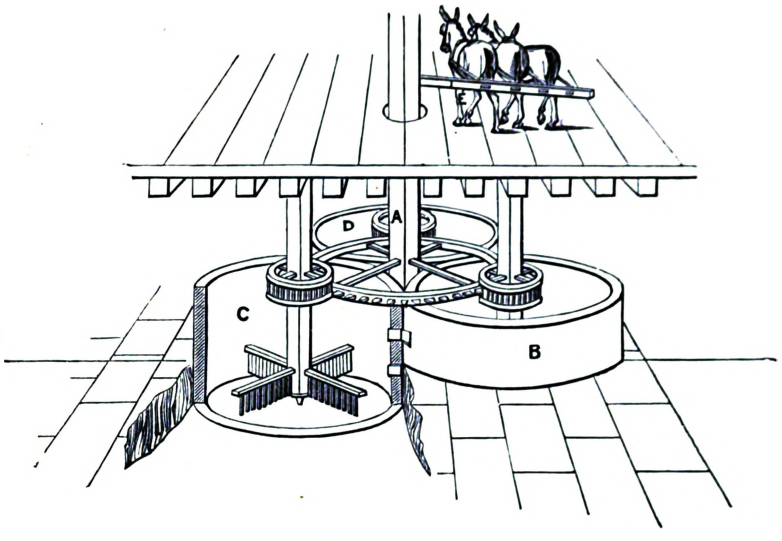

together in a circle, and constructed of stone slabs carefully cemented. The depth of each of these tanks is 5 ft. 4 in., and its diameter 9 ft. 6 in. They are made to communicate with each other by means of an oblong opening 8 in. in height and 10 in. in width; of which the first is placed at a height of 8 in., and the other at a distance of 30 in. from the bottom of the tanks. In addition to these, the last tank is provided with two separate discharge-holes; the first at a height of 6 in. from the bottom, and the other, which is only opened for the purpose of cleaning up, is situated close to the bottom. The diameter of the upper opening is about 4 in., and that of the lower 1 in.

In the middle of each tank is an upright wooden shaft carrying four arms furnished with wooden teeth acting as agitators, the whole being set in motion by a central shaft A provided with a spur-wheel working in pinions on the tank-shafts.

The pinions giving motion to the agitators in the second and third tanks are a little larger than that working the stirrer in the first, and consequently their motion is somewhat slower.

Before being washed, the torta is first divided into several parcels, each of which is softened by the addition of water and subsequent treading, and then carried to the washing house in large bateas, dusted on the inside with dry horse-dung in order to prevent loss.

When the washings of samples taken from the tanks afford only minute metallic traces, the plug at some distance above the bottom of the discharge-tank D is removed for the purpose of discharging the slimes; and as soon as they have been run off the plug is replaced, and the operation continued until the whole has been washed up.

In addition to the amalgam which remains in the bottom of the tank, there is also a considerable quantity of the heavier constituents of the ore treated. This residue is removed in wooden bowls to another tank, and thrown into large bowls or bateas. The person using the batea leans over the side of the tank, and with one hand on each side of the bowl, gives to it the peculiar washing motion, taking up a small quantity of water, which, after circulating round the edges of the vessel, is finally discharged, carrying with it a certain portion of the residue. The deposit of finely-divided mineral remaining with the amalgam in the washing apparatus, and from the washing in bateas, is subsequently reground in arrastres. By this means it is made to yield a certain quantity of amalgam rich in gold, but is not generally a second time subjected to patio amalgamation.

The amalgam thus obtained is carried to the mercury house, where it is deposited in a large stone trough; and as soon as the whole amount produced by a heap has been collected, a large quantity of pure mercury, together with a little water, is added. The mass is now well stirred by hand, for the purpose of causing the separation of impurities which gradually come to the surface, and which are from time to time wiped off by means of a woollen cloth. A small quantity of clean water is added after each removal of the impurities, and the operation repeated until the surface of the amalgam presents a bright uniform appearance.

When the amalgam has been purified from the last adhering particles of mineral, by wiping with flannel, it is filtered through a cone-shaped bag, or strainer, Fig. 6902, of which the upper portion is covered with leather, while the lower consists of strong, closely-woven canvas. This is hung by chains or cords from a stout beam, and when the mixture of mercury and amalgam is introduced, its weight causes a large portion of the quicksilver to escape through the meshes of the sail-cloth in a liquid form, and to fall into a vessel placed beneath it for that purpose. The amalgam finally assumes the appearance of white sand. This amalgam usually contains mercury to the amount of from five to five and a half times the weight of silver present.

The filtration of a charge usually occupies about two hours; and when the mercury has ceased to drip from the bottom of the bag, the strainer is emptied on a table covered with leather, and the amalgam beaten into triangular bricks in iron moulds having the form shown, Fig. 6903.

6902.

6904.

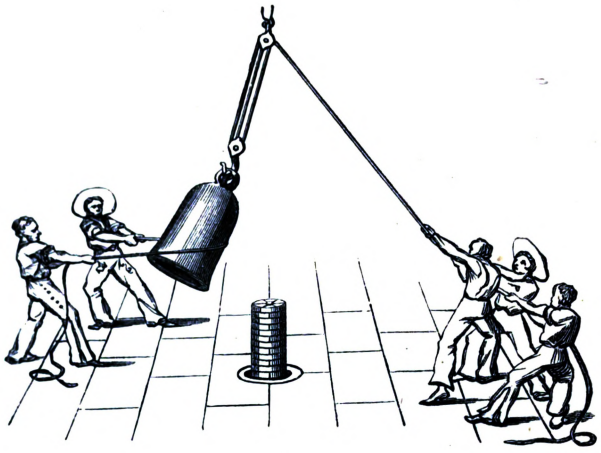

6905.

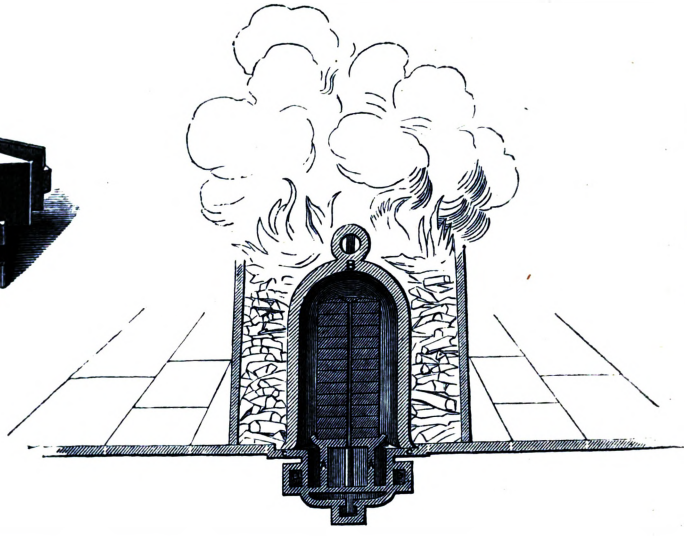

6903.

The retorting is conducted by the aid of a large iron or copper bell, which is placed over the amalgam, and around which is kindled a charcoal fire. A circular tank of masonry is constructed below the floor of the burning-house, through which a stream of water is constantly flowing, and in this is placed an iron tripod, covered by a round plate, having a hole in its centre for the escape of mercury. On this plate are piled the bricks of silver, to such a height as to reach to within a short distance of the top of the bell, which, when placed over them, leaves a space of about an inch between its sides and the column of amalgam. When thus arranged, the bell or capellina is lowered over it, and the bottom secured, either by lute or a water-joint, constantly supplied by means of a pipe. Unburnt bricks are now built around the arrangement in the form of a hollow wall, leaving an annular space between them and the bell, of about 8 in. width. This is filled with charcoal, which is ignited, and as the temperature increases, the mercury becomes volatilized, and, passing into the chamber below the floor, is condensed, collects in a liquid form, and escapes by an iron pipe into a proper receptacle. The fire is thus kept up during about fifteen hours; after which the apparatus is allowed to cool, and, when sufficiently cold, the bell is removed, either by a windlass or by means of simple blocks, as in Fig. 6904.

This silver, which is found to have assumed a porous structure, and a beautiful frosted appearance, is placed in leathern bags for removal to the smelting house, where it is assayed, and run into bars. The silver obtained by the patio process of amalgamation is in most cases very nearly pure, being generally above 990 fine.

In some localities, the arrangements for retorting by the capellina are slightly varied from those above described, as Fig. 6905, in which the amalgam is supported beneath the bell B, on a stand A, enclosed in a cast-iron vessel C, kept cool by means of a current of water constantly flowing beneath the bottom, and through the annular cavity D. The condensed mercury escapes, as soon as

deposited, by means of a wrought-iron pipe, into a proper receiving vessel. In some cases the charcoal is retained in its place by means of a circular iron grating.

The interior measurements of the bell are usually as follow;—height, 3 ft.; diameter, 18 in.; thickness of metal, 1½ in. The charge of amalgam is about 2000 lbs., affording about 400 lbs. of silver; the consumption of charcoal a charge is 500 lbs.

The loss of silver by this process of amalgamation is considerable, but varies in different localities, in accordance with the nature of the ores operated on, and the degree of fineness to which they are reduced by grinding. The loss of mercury is generally equivalent to the weight of silver obtained. The results of assays made during a year on ores containing a considerable quantity of galena, pyrites, and blende, as compared with those actually obtained from the patio, showed a deficit equal to 28 per cent. of the assay produce.

After the discovery of silver mines in Nevada, it became evident that none of the processes employed in other countries for the reduction of silver ores could be rendered available for the treatment of those forming the main deposits. The pan, or Washoe process, so called from the district where it was first employed, was therefore introduced. The following description, although confined to the Comstock ores, gives a fair general outline of the process.

The ores of the Comstock lode consist chiefly of various sulphuretted forms of silver, native silver, and gold, finely, almost imperceptibly, disseminated through a gangue of quartz. With these are associated a few other accessory minerals in inconsiderable proportions.

For metallurgical treatment they formerly were, and to some extent still are, divided into three classes. The basis of this assortment is arbitrary. The chief object of the classification is to separate those ores whose mineral composition and, more especially, whose high value demand a very exact and careful treatment in order to obtain the highest possible percentage of their precious contents from those of lower grade, which must be treated by less expensive methods.

The first class usually embraces those ores whose assay value exceeds $150, or in some cases, $100, a ton. The second class, where distinguished at all, is usually designed to include ores whose assay value ranges between $90 and $150 a ton. The third class embraces all workable ore of lower grade than the foregoing, the average assay value varying considerably in different mines.

In many of the mines the proportion of the second-class ore is so small, or the character of the ore so uniform, that no such distinction is made, the whole product being worked without assortment. About 25 to 30 per cent. of the whole value contained in these ores is gold, the remainder is silver. In the bullion produced the relative proportion of the gold is a little higher, as it is more easily saved than the silver.

The silver of the first-class ores is intimately combined with sulphur, zinc, lead, iron, and other base metals, which render the extraction of the silver difficult. They cannot be profitably treated by the simple methods to which the more docile ores of the second and third classes are subjected, but are crushed dry, roasted with salt in reverberatory furnaces, and then amalgamated in barrels by the Freiberg process. The ores of the second and third classes are treated by the pan process.

The ore to be treated by the ordinary Washoe process is delivered from the mine to the mill in pieces varying in size from fine particles to those as large as a man can lift. It needs first to be crushed to a fine condition. This operation is performed by a battery or stamps similar to that described at p. 272. The larger pieces of ore are first broken to a suitable size for feeding the stamps, either by a sledge or a mechanical rock-breaker, Blake's machine being in general use for this purpose.

The screens through which the crushed material is discharged from the mortar are either of brass wire-cloth, having thirty-five or forty meshes to the lineal inch, or more frequently of Russia sheet iron, perforated with fine holes. Screens of the latter sort, in general use, are known as Nos. 5 or 6. In the last named the hole has a diameter of $\frac{1}{40}$ of an inch.

In former years the amalgamation of the precious metals of the ore with quicksilver was carried on in the mortar. This feature of the process has, however, been given up in the mills of the Washoe district. The stuff, being discharged from the battery, is conveyed in troughs by means of the flowing water to settling tanks, placed in front of the batteries. These tanks are usually built of plank, are 3 or 4 ft. deep by 5 or 6 or more feet square, and are so arranged as to have communication with each other near the top, so that the stream of water carrying the crushed ore in suspension, having filled one tank may pass into the next, and so on through several, depositing the material and not finally leaving the tanks until it has become tolerably clear. The number of tanks must be sufficient to allow of a certain portion being emptied; while others are receiving their supply, and the conveying troughs are provided with gates so arranged that the stream can be admitted to one portion of the tanks and shut off from the other at pleasure. The stream, having deposited in these tanks the bulk of the material, is still charged with slimes, or rock reduced to an impalpably fine condition, which is only settled by a slow process. For this purpose the stream is sometimes permitted to pass through other large settling tanks, or to slowly deposit its charge in a pond or dam outside the mill. These slimes form a variable and in some mills a large percentage of the whole amount crushed; in some instances more than 10 per cent. When one or more of the settling tanks in the mills have been filled the stream is diverted from such to others that have been emptied, and the full ones are in their turns cleaned out, the sand or crushed ore being then subjected to the grinding and amalgamating process of the pan.

Modifications of the amalgamating pans employed in the reduction works of Nevada are almost endless. There is, however, a simple form of apparatus usually known as the common pan, with which results can, by careful working, be obtained almost as good as from those of more complicated construction. The common pan, Figs. 6906, 6907, is a round wooden or cast-iron tub, 6 ft. in diameter, and about 2 ft. in depth, with a flat bottom. A false bottom of 1½-in. iron is inserted into this, and a hollow pillar in the centre admits the passage of an upright shaft, which is generally worked by gearing beneath the pan, capable of communicating to it from fifteen to twenty revolutions a minute. To the wooden arms *a* are attached the blocks *b*, also of wood, to which are fastened the

iron shoes *c*, by means of the bolts *d*, passing up through the arms. Each shoe has also an iron pin, about an inch in length, which fits into the wooden block and keeps the iron facing steadily in its

6906.

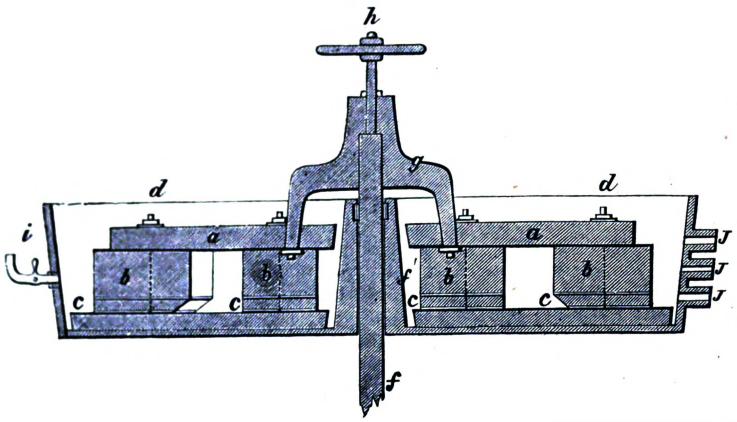

6907.

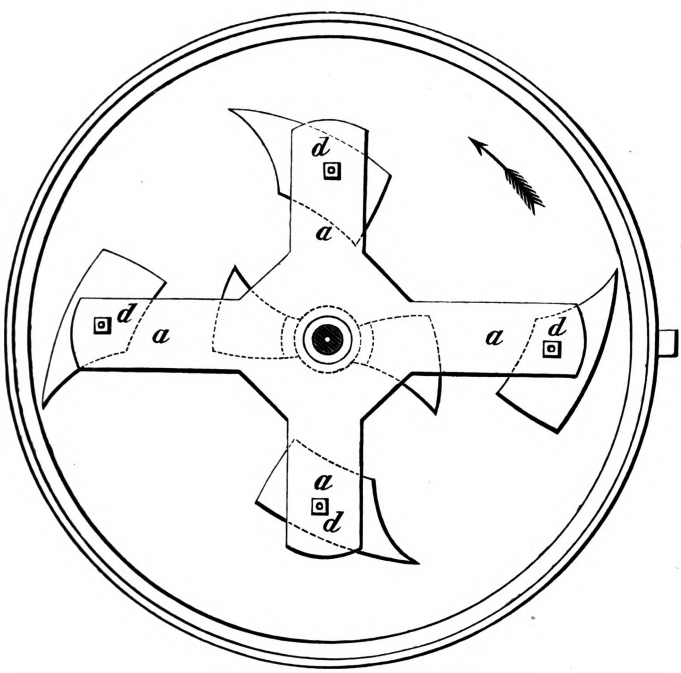

place. On the shaft *f*, passing through the central pillar *f'*, is the yoke *g*, which, being fitted with a sliding key, can be raised by means of the screw *h*; and the ends of the yoke itself being attached to the wooden cross arms, the mullers will be raised at the same time. Steam is introduced into the pulp by the pipe *i*, the discharge being effected by means of the apertures J. The false bottom is made 1 in. less in diameter than the bottom of the pan itself, and has an aperture in the centre an inch larger in diameter than the base of the pillar, in which the vertical shaft works. To fasten the bottom in its place, and prevent the mercury from finding its way under it, strips of cloth, about 2 in. in width, are lapped around the edge of the false bottom, as well as applied against the sides of the pan. A little iron cement is then poured in, and the bottom secured in its place by means of well-dried wooden wedges tightly driven between the two layers of cloth. These wedges, which are driven quite close to each other, must be somewhat shorter than the thickness of the false bottom; thus leaving a space above them which is subsequently covered with a paste of iron cement, that is allowed to set before using the apparatus. About 1 horse-power is required to work this pan, which will amalgamate from 1½ to 2 tons of ore in the course of twenty-four hours.

A very good but more complicated pan is Wheeler's, represented in Fig. 6908, A being the pan, with the dies *a* in their several places; whilst B is the rotating muller, fitted with its shoes *b*, removed from the pan, and turned bottom upwards. The upper muller is driven by means of a

hollow cone, which passes over the central pillar, and is connected with the vertical shaft by means of a sliding key.

The distance between the mullers is regulated by a screw, fitted with a hand-wheel. The shoes *b* are secured to the upper muller, either by bolts and nuts, or more frequently by projections passing through inclined oblong holes in the rotating plate, to which they are firmly secured by means of wooden wedges. The dies *a* are laid on the bottom of the pan, and kept in their places by the ring *c* in the centre, and on the sides by the inclined ledges *d*, under which their ends are wedged. The dies, like the shoes, are 1 in. thick, and bevelled on the edges in the same direction; so that, when put together, grooves are formed between them, as shown in the drawing. On the upper side of the outer edge of the muller are inclined ledges, which in connection with those, *d*, cast on the pan, create an upward current in the pulp; whilst guide-plates, which slide into grooves at *e*, convey it towards the centre. This pan stands on a cast-iron framing, and is driven by mitre-wheels from beneath.

6908.

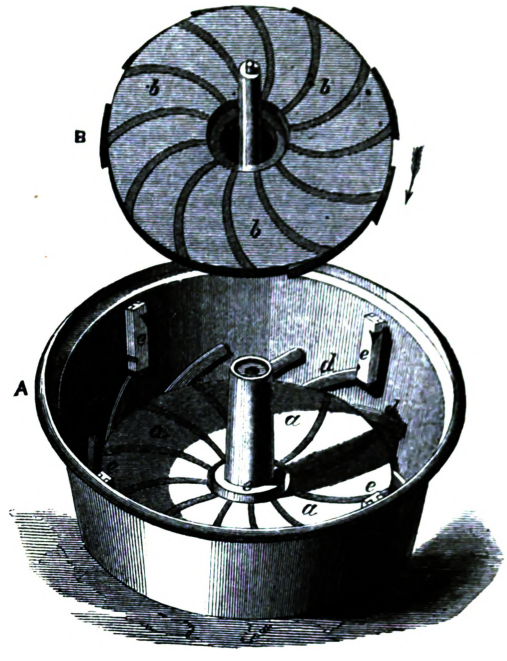

From the dies and bottom not being cast perfectly true, the grinding surfaces are often, at first, a little uneven, and consequently the grinding planes should not at once be brought into too close contact.

The runner of these pans requires to be lifted at least once a week for the purpose of removing the amalgam which accumulates around the central pillar, and thus prevents the pulp from passing freely between the grinding surfaces. This pan is generally made 4 ft. in diameter at bottom, and requires from 2½ to 3 horse-power to work it efficiently. It usually makes about sixty revolutions a minute.

The operation of the pan consists in the further reduction or grinding of the stamped rock to a fine pulp and in the extraction of the precious metals by amalgamation with quicksilver. The quantity of ore with which a pan is charged for a single operation varies from 600 or 800 to 4000 or 5000 lbs., according to the size of the pan. The ordinary charge of pans most generally in use is 1200 to 1500 lbs.

In charging the pan the muller is raised a little from the bottom, so as to revolve freely at first. Water is supplied by a hose-pipe, and at the same time the sand is thrown into the pan with a shovel. Steam is admitted, either to the steam-chamber, in the bottom of the pan, or directly into the pulp. In the former case the temperature can hardly be raised as high as in the latter; but, on the other hand, when steam is introduced directly care is necessary to avoid reducing too much the consistency of the pulp by the water of condensation. The pulp should be sufficiently liquid to be kept in free circulation, but thick enough to carry in suspension, throughout its entire mass, the finely-divided globules of quicksilver. In some mills both methods of heating are employed in the same pans, the temperature being first raised with each charge by live steam, and afterward sustained by admitting steam to the chamber only. Some pans are covered with wooden covers to assist in retaining the heat. When properly managed the temperature may be kept at or near 200° Fahr. When, in the use of live steam, the pulp becomes too thin, the supply of steam is cut off, the covers removed, and the pulp allowed to thicken by the evaporation of the water. The steam in the chamber may keep the temperature up to the desired point in the meantime. Another advantage of the steam-chamber is that the exhaust steam from the engine may be used in it, while for use in the pulp it is better and customary to take steam directly from the boilers, because that which comes from the cylinder of the engine is charged with oil and is injurious to amalgamation. The muller is gradually lowered after the commencement of the grinding operation, and is allowed to make about sixty or seventy revolutions a minute. In the course of an hour or two the sand should be reduced to a fine pulpy condition. When this has been accomplished, and occasionally at an earlier stage of the operation, a supply of quicksilver is introduced into the pan, the muller slightly raised from the bottom to avoid too great friction, which would act to the disadvantage of the quicksilver, and the action continued for two hours longer, during which the amalgamation is in progress. The quicksilver is supplied by pressing it through canvas, so as to scatter it upon the pulp in a finely-divided condition. The quantity varies greatly in different mills, the ordinary supply being about 60 or 70 lbs. to a charge of ore consisting of 1200 or 1500 lbs. In some mills a quantity, varying from 75 to 200 or even 300 lbs., is put into a pan when starting up after a clean-up, and subsequently a regular addition of 50 or 60 lbs. made with each charge.

To promote amalgamation it is the general custom to add to the charge, either at or soon after the beginning of the grinding, or at the time of supplying the quicksilver, various materials generally described as chemicals, and usually consisting at the present day of sulphate of copper and

salt. The quantity used varies from a quarter or half a pound to three or four pounds to each charge of ore; the two substances being employed in very variable proportions in different mills.

Two hours having been devoted to the grinding, and two or three more to amalgamation, the pan is discharged, and its contents received by a settler or separator. The pan being emptied and partly washed out by the stream of water, is again charged with a fresh quantity of sand, and the grinding operation is resumed.

Settlers or separators, like the pans, differ somewhat in details of construction, but they usually are round tubs of iron or of wood with cast-iron bottoms, resembling the pans in general features, but larger in diameter.

In some mills, at a stated hour of each day, the quicksilver coming from the settlers is strained and the amalgam extracted; in others, as the quicksilver thickens or becomes sluggish by the accumulation of amalgam, it is diluted by the addition of fresh quicksilver, and the straining of the amalgam is only made once in several days.

From time to time the pans and settlers must be stopped and cleaned. For this purpose the mullers must be raised, the shoes and dies removed from their places, and all the ironwork of the pans and settlers carefully scraped with a knife, to remove and collect the hard amalgam which attaches itself to such surfaces. In many cases one-fourth or even a greater proportion of the total product of amalgam is obtained in this way.

The amalgam, having been strained in bags similar to Fig. 6902, and forcibly pressed, to expel as much of the fluid quicksilver as possible, is then subjected to the process of sublimation in a retort about 12 in. in diameter and 3 ft. long, mounted on an arch of fire-brick, and placed within another arch, from the crown of which the smoke is carried off to the chimney. The retort is fitted with a stout cover, carefully adjusted like the stopper of a coal-gas retort. From the upper part of the end a 2-in. iron pipe carries off the volatile matters. This is so fitted to the downcast pipe, 4 ft. in length, that, by T-pieces and stoppers, every facility is afforded for cleaning out the pipes. The downcast pipe is so fitted within another pipe 3½ to 4 in. in diameter, as to constitute a Liebig's condenser, into the bottom of which cold water is supplied; the heated water flowing off from the top. The downcast pipe opens into a small bottomless chamber, immersed sufficiently low in a tank of water to keep it air-tight, but in such a manner as to prevent accidents from the absorption of water into the heated retort.

This retort is provided with several cast-iron semicircular trays, which slide easily in and out; these are divided into two parts by a transverse partition. Before the weighed charge of amalgam is put into the tray, it is coated with milk of lime, or a thin wash of clay, and not unfrequently a sheet of paper is also placed over the bottom. By these precautions the retorted amalgam is prevented from adhering to the iron, and much trouble avoided. The charge having been placed in the retort, the cover is carefully luted with a mixture of clay and wood-ashes, made up into a thin paste. The fire is then lighted, and the heat slowly and steadily raised, until the retort is of a bright red

6909.

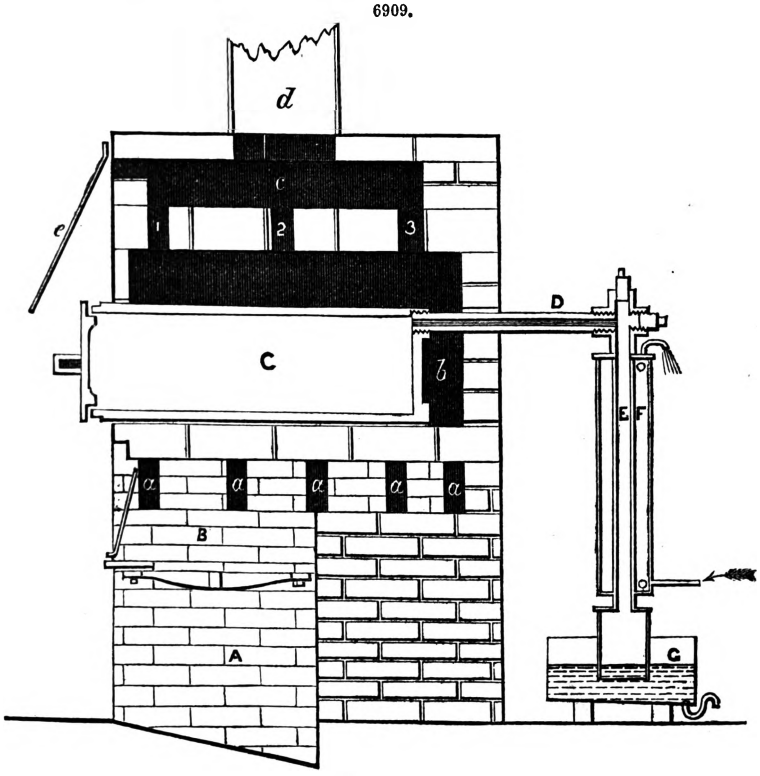

colour, and is so maintained until the mercury ceases to distil over. The retort is now allowed to cool gradually down, and when cold the retorted silver is withdrawn and weighed, as is also the

mercury obtained, as a precaution against any possible loss of quicksilver from hidden leaks in the retort. About one-sixth of the charge usually remains, or 200 lbs. of crude bullion from 1200 lbs. of amalgam. The retorted amalgam is broken up, melted in plumbago crucibles, and cast into bars or ingots of bullion of from 1000 to 1500 oz. each. These are assayed and valued, the value being marked on the bars, which are then ready for the market. The quality or fineness is marked in thousandths, thus—gold 24, silver 841, making together 865 thousandths; leaving 135 parts in a thousand, which principally consist of copper; but no notice is taken of this, as it is of no money value in the sale of the bar.

The retort employed at the mills near Virginia for the distillation of silver amalgam is represented, Figs. 6909, 6910, of which the second is partially in section, and the first is a longitudinal section.

6910.

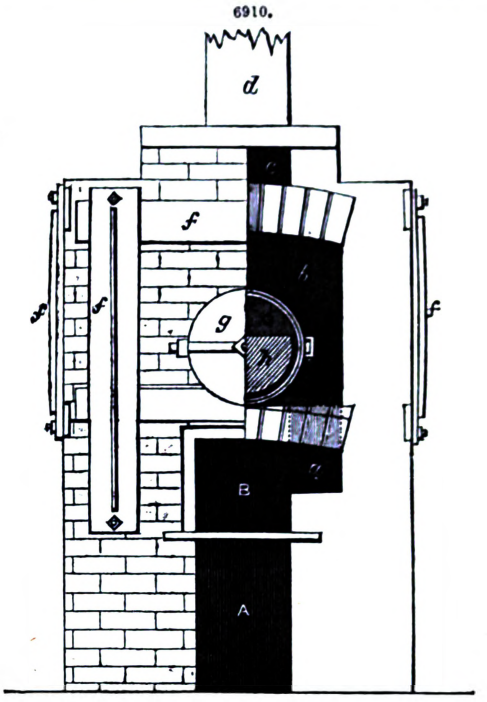

The ash-pit A is beneath the fire-place B, which communicates, by means of flues *a*, with a chamber *b*, enclosing the cast-iron retort C, from which the products of combustion are conveyed by the flues 1, 2, 3, through the arched cavity *c*, to the chimney *d*.

By dampers covering these flues the draught may be controlled so as to heat the retort according to the requirements of the case. The pipe D carries the vaporized mercury to the vertical pipe E, in which it is condensed by the action of a stream of cold water passing upward from the bottom through the Liebig's condenser F. The condensed mercury collects in the reservoir G, from which it is drawn off into bottles through a bent tube at the bottom. Any vapours escaping from the retort-door are conveyed into the flues by the hood *e*, of sheet iron. The arrangement of the cover of the retort is shown at *g*, and a portion of the semi-cylindrical tray, used for charging the retort, at *h*; the position of the iron plates and braces for binding the brickwork is represented by the letters *f*.

The pulp, after passing from the settlers, in which, as before described, the quicksilver and amalgam are separated from it, is variously treated in different mills. Frequently the whole mass is allowed to pass through agitators, tubs, or vats of various devices, for the purpose of saving some of the quicksilver and amalgam that are unavoidably carried off with it from the settler. In some mills various kinds of concentrators are employed for a similar purpose, and to obtain the heavy undecomposed sulphurets in concentrated form; in other cases, where there is water sufficient and the lay of the land favourable, blanket-tables are constructed outside the mill, over which the stream of tailings is allowed to run, and a portion of their valuable contents caught in blankets; and, at convenient points, dams are constructed for the accumulation of tailings, which, after months of exposure to the influences of the weather, may be again worked over with profit.

The ordinary working result obtained by treating the ore as above described in the pan and settler varies between 65 and 75 per cent. of the assay value, which, by subsequent treatment, is increased sometimes to 85 or 90 per cent.

Barrel Amalgamation.—The combinations in which the gold and silver exist in the first-class Comstock ores unfit them for profitable treatment in the simple grinding and amalgamating process just described.

The method of treatment to which the ore is subjected, therefore, is similar to the Freiberg barrel process, and consists of drying, crushing by stamps without the use of water, roasting with salt, amalgamation in revolving barrels, and the separation of the gold and silver from the quicksilver by the method of retorting.

The drying kiln at the Savage mine is formed of a series of flues, covered by a cast-iron floor, on which the ore, already reduced to a size suitable for stamping, is spread. The surface for the reception of the ore is about 8 ft. wide by 12 ft. long. The iron is cast in sections or plates, 8 ft. long by 3 ft. wide, with a strengthening rib on the under side. The base of the kiln is brickwork, and the flues are about 8 in. deep. They are covered by the iron plates. At one end of the kiln is a fire-place, and at the other a stack, so that the heat passes from one end to the other under the iron cover or floor, on which the ore is spread to a depth of 4 or 5 in. The ore is constantly raked and turned until quite dry.

When the kiln is conveniently placed, as in some similar establishments in Eastern Nevada, the heat from the roasting furnaces, on its way to the stack, passes through the flues, saving a special firing. In the present instance there are three kilns, able to dry about 25 tons a day, consuming in all about a half cord of wood in twenty-four hours, and requiring one man's attention to keep up fires and rake over the ore.

For crushing the rock, after drying, there are twenty stamps, arranged in batteries of four, weighing about 600 lbs. each, dropping 8 or 9 in. about sixty-five times a minute. The foundations

and battery-frame are not essentially different from those in wet-crushing batteries. The mortars differ from the high ones used for wet-crushing, consisting of a bed-piece, with sides and ends that are only high enough to provide the means of bolting the iron casting to the woodwork of the battery-frame, attaching the screen-frames.

The dies are flat, circular pieces of cast iron, that fit into recesses in the bottom of the mortar. Each die has two lugs or projections on its periphery, which, being dropped into a groove in the bottom of the mortar, may then be revolved 90°, under a flange or lip with which the recess is cast. Molten lead is then poured in to hold the dies firmly. When it is desired to remove them, quicksilver is poured into the battery, dissolving the lead and loosening the dies. By retorting the quicksilver both metals are recovered.

The discharge is at both sides and ends. Screens of brass wire-cloth are used, having 40 meshes to the lineal inch, or 1600 holes to the square inch. The stamps crush from a half ton to 1 ton a head each day of twenty-four hours. The batteries are enclosed by housings or closely-fitted boxes, which serve as receivers for the crushed material. The casings are provided with doors, by means of which the workmen can enter and remove the crushed ore by shovelling it into barrows.

Roasting.—The fine ore after crushing is roasted with salt in reverberatory furnaces. These are built of common red brick. Figs. 6911, 6912, show the method of their construction. Fig. 6911 is

6911.

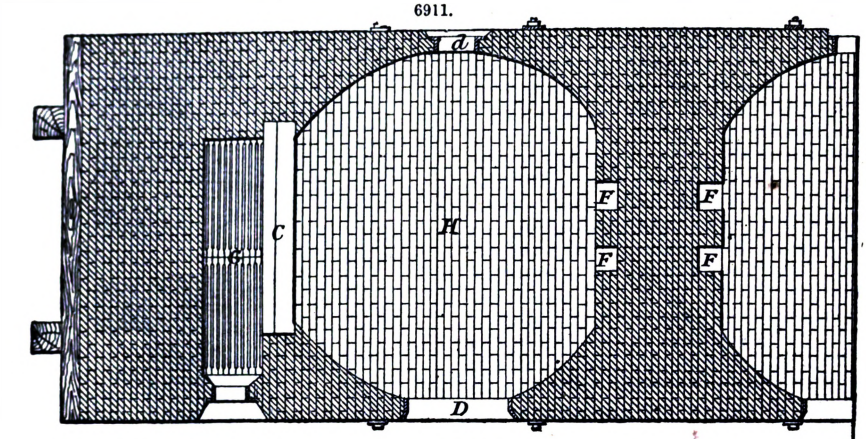

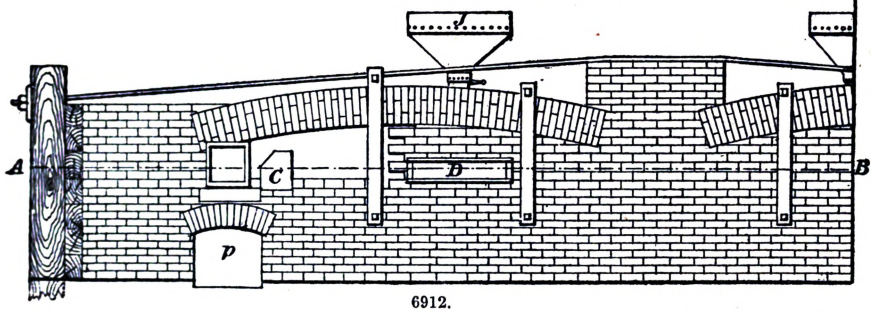

6912.

a horizontal section through the line A B, Fig. 6912. H is the hearth; D the stirring door; *d* the discharge door; G the grate; C the bridge; F the flues; *p* the ash-pit; J the hopper. The charge consists of 1000 lbs. of ore, which is mixed with 6 per cent. of salt, the latter being added to the charge in the hopper, by which the furnace is supplied. The charge is heated very gently at first, the temperature being gradually raised, until at the end it is subjected to a high heat. Usually six hours are required for the roasting. The charge is constantly stirred, and once or twice during the operation it is turned; that is, the portion of the charge remote from the bridge is caused to exchange place with that which is near.

The operation effected by thus roasting with salt consists, very briefly expressed, first, in the oxidation of the metallic compounds, converting the sulphurets, in which form the silver chiefly exists in the ore, to sulphates; and the subsequent decomposition of these combinations by the salt, with the formation of the chlorides of the metals. Sometimes an addition of limestone is made to the charge, for the purpose of decomposing the chlorides of copper, zinc, and so on, thus preventing, to some extent, their subsequent amalgamation in the barrel, and obtaining bullion of a purer quality.

Each furnace roasting four charges of 1000 lbs. each, or 2 tons, in twenty-four hours, consumes one cord of wood. Two stirrers are employed on each twelve-hour shift, making four men in twenty-four hours. One man is required to receive and attend to the ore on the cooling floor, after its discharge. The same man can attend to more than one furnace.

The roasted ore is passed again through a screen, having 1600 holes to the square inch, in order to remove from it any lumps that may have formed by caking in the furnace, or coarse particles that may have escaped the battery-screen. It is then elevated to a large hopper, placed above the amalgamating barrels, to which latter it is thence supplied by means of smaller hoppers, one of which is suspended over each barrel.

The barrels are 4 or 5 ft. in length and diameter. They are usually made of soft pine. Figs. 6913, 6914, are a vertical section and end view of an amalgamating barrel, formerly used at the Gould and Curry Mill. The ends of the barrel are made of plank, fitted together and joined

6913.

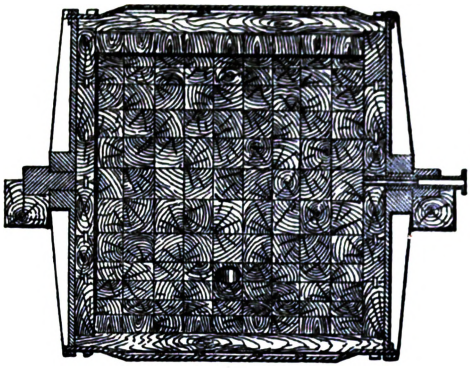

6914.

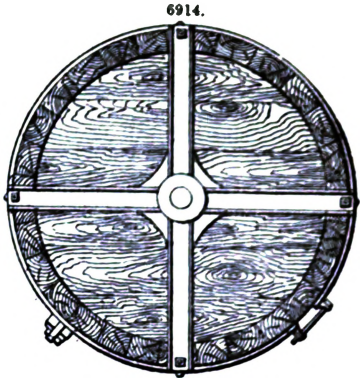

6915.

6916.

with a tongue of hard wood. The staves of the barrels are sometimes made of 6-in. stuff, without lining; sometimes, as in the figure, the staves are 2 or 3 in. thick, with an interior lining of blocks, 4 or 5 in. square and 3 or 4 in. thick, and so placed in the barrel that the wear is on the end of the grain. This lining can be removed when worn out. The staves of the barrels are bound with iron hoops, the ends of which are drawn together as in Fig. 6915. The ends of the barrel are strengthened by a four-armed flange of cast iron. The barrels are caused to revolve by cog-gearing, the teeth being put on in segments around the end of the barrel; or by belting, or, as at Austin, by friction-gear. The barrel, of which Fig. 6913 is a section, shows a contrivance for admitting steam to the pulp through the trunnion. This arrangement, not very common, consists of a steam-pipe *p*, Fig. 6916, which enters the trunnion and fits smoothly against the end of another pipe *q*, that passes through the end of the barrel and admits the steam to the interior. The interior pipe *q* revolves with the trunnion, while the exterior pipe *p* is fixed and remains without motion. The trunnion T is keyed to the flange already referred to.

The barrels are charged with about 2000 lbs. of ore, mixed with water enough to make a moderately thick paste. Before adding quicksilver, the charge is revolved for two or three hours in the barrel with several hundred pounds of scrap iron. The object of this is to effect a partial reduction of the chlorides present, which would otherwise be performed at the expense of the quicksilver. The chloride of silver is partly reduced by the metallic iron, and is subsequently amalgamated by the quicksilver. The same is true of the lead and copper. Quicksilver is added according to the richness of the ore, usually varying from 250 lbs. to 500 lbs. or more. The barrel is run two hours, at twelve or fifteen revolutions a minute, and then examined, that the consistency of the paste may be ascertained. If the latter is too thin the quicksilver settles on the bottom. This condition is remedied by the addition of more roasted ore; while if too thick for the most favourable distribution of the quicksilver, more water is added. The barrel is then allowed to revolve again for fourteen hours, making fifteen revolutions a minute. The whole time occupied from the charging to the discharging of the barrel is eighteen or twenty hours. When the amalgamation is complete, the paste is thinned by the addition of water, and the quicksilver and amalgam are thus allowed to collect on the bottom of the barrel.

Below the barrels is a large hopper or funnel-shaped contrivance, sloping down from the four sides to a common centre. When a barrel is to be discharged, a small plug in the side is loosened while turned upward; and when the barrel is revolved, so that the plug is downward, it is drawn out by hand. The quicksilver and amalgam are discharged into the hopper, and are allowed to run from the barrel until the pulp begins to follow, when the plug is replaced. When all the barrels ready for that purpose are discharged, the amalgam in the hopper is carefully collected and washed, and afterward cleaned in a common pan like those in use in other mills for similar purposes. The straining of the quicksilver and retorting of the amalgam is performed in manner similar to that already described.

After the hopper below the barrels has been cleaned of all the quicksilver discharged into it, the residue is permitted to flow from the barrels and to run down into a large agitator, 8 or 10 ft. deep, and 12 or 15 ft. in diameter, in which stirring-arms are revolving. By this means the unseparated quicksilver and amalgam are allowed to settle, and the concentrations of this vessel are worked over in pans, while the mass of tailings, passing from the settler, are subjected to further methods of concentration and subsequent treatment.

The different processes by which silver is obtained by the wet way from the various ores and metallurgical products containing that metal, have, in many cases, supplanted the older processes of liquation and amalgamation, and may be often advantageously adopted for the treatment of

argentiferous compounds; particularly when the amount of lead present is small, and the proportion of copper large.

Augustin's process was first introduced in 1849, but after a short time it was superseded by the simpler process of Ziervogel.

Ziervogel's Process.—The efficiency of this method depends on the circumstance, that when a finely-powdered matt, consisting of the sulphides of copper and iron containing a certain proportion of silver, is, with proper precautions, roasted in a reverberatory furnace, the iron and copper first pass into the state of sulphates, which are afterwards transformed into oxides. The sulphide of silver subsequently undergoes a similar transformation, and, if the roasting were continued, would ultimately be reduced to the metallic state. If, however, the operation is arrested at the proper stage, the copper and iron will have become transformed into oxides, whilst nearly the whole of the silver exists as a soluble sulphate readily removed by water; which thus affords a means of separating that metal from the other constituents of the charge, which are, for the most part, insoluble in that menstruum. From the argentiferous liquors thus obtained, the silver is afterwards precipitated.

The matt, after being ground between a pair of millstones, 4 ft. in diameter, made of the granite, is bolted through a circular sieve, of from 1400 to 1500 apertures to the square inch, and then carefully roasted in a reverberatory furnace, specially adapted to the purpose.

The success of this process depends on the degree of facility with which the operation of roasting may be controlled, so as to be enabled to seize the exact period at which the several metallic compounds are in the precise condition required. The sulphate of copper should be, as far as possible, converted into an oxide, whilst the whole of the silver ought to exist in the form of a soluble sulphate. Should the roasting be arrested before this point has been attained, a large amount of copper will be found to remain in a soluble state; whilst a portion of the silver still exists in the form of an insoluble sulphide. If, on the contrary, the roasting is carried too far, the sulphate of silver will have become reduced, leaving that metal in the metallic state; which, being totally insoluble in the hot water employed for lixiviation, will remain with the copper, and become commercially lost. Long practice and much observation are required on the part of the workmen employed in this process.

The roasted argentiferous matt is taken from the furnace to the lixiviation department, which consists of a large room, in which a number of vessels are arranged, Fig. 6917, and so placed that the liquors flowing from one are immediately received in the next which follows in the series.

6917.

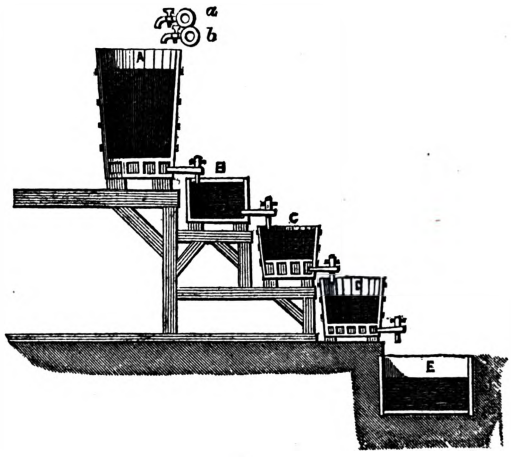

The powder to be operated on is divided into parcels, which are placed in the vessels A, provided with filters and false bottoms; liquor from a previous operation, together with a small quantity of fresh water, both heated to a temperature of 160° Fahr., are run into each of the upper tubs through the pipes *a*, *b*. A little sulphuric acid is also employed. This fluid soon permeating the ore in the tubs A, takes up the sulphate of silver, and any other soluble salts present, which passing through the filter are carried in solution into the tank B, divided into two parts. In this reservoir the liquors enter the first division, and after allowing the matters held in suspension to settle, the solution flows over the partition, and from thence through ten taps into as many tubs C. In the bottom of each of these are placed 10 lbs. of cement copper and 250 lbs. of coarse copper bars, by which the larger proportion of the silver is precipitated in the metallic form. The fourth vessels D, of which there are five, also contain metallic copper, and in them are precipitated any traces of silver which may have escaped precipitation in the tubs C. From these last tubs the spent liquors flow off into the lead-lined cistern E; from which they are subsequently raised by steam pressure into another leaden cistern above the level of the first series of tubs A, heated to a temperature of 160° Fahr., and passed over a fresh charge of roasted matt, introduced into the series of dissolving vessels A.

About two and a half hours are required to dissolve out the sulphate of silver contained in each charge; and at the end of that time the residual contents of the dissolving tubs are transported to an adjoining room, where an assay sample is taken. Should the results of this assay show that the amount of silver remaining is less than 0·00036 of the weight of the material operated on, the residues are placed aside, for the purpose of being fused for blistered copper; but if, on the other hand, they contain more than this proportion of silver, they are re-roasted.

The finely-sifted matt, after being withdrawn from the furnace, is allowed to remain about eight hours before being introduced into the lixiviating tubs, and thus becomes cooled down to about 160° Fahr. before charging. When placed in the tubs, hot water is admitted from *a*, until it begins to escape from the taps at the bottom. The water is then turned off, and hot liquors from a previous operation are introduced from the leaden cistern by the pipe *b*, until the liquid flowing from the cocks at the bottoms of the tubs no longer affords a precipitate of chloride of silver on the addition of a weak solution of common salt. The final liquors collected in the vessel E, when they have become too highly charged with sulphate of copper, are brought in contact

with scrap iron, and thus afford a supply of cement copper, which may be subsequently employed in the tubs C and D.

The process of Ziervogel is, however, adapted to the requirements of comparatively few localities, since the presence of certain impurities, and particularly of any considerable amount of either arsenic or antimony, gives rise to the formation of insoluble salts, which materially interfere with the extraction of silver.

Von Patera's Process.—This method of extracting silver from its ores consists in roasting them with an addition of common salt until the whole of the silver has been transformed into chloride; in dissolving out the chloride of silver by means of a cold dilute solution of hyposulphite of soda; in precipitating the silver in the form of sulphide by the addition of polysulphide of sodium; and in reducing the precipitated sulphide of silver to the metallic state by exposing it in a muffle, at a high temperature, to the ordinary influences of atmospheric air.

The prepared ores are subjected to a process of roasting in a furnace of peculiar construction, and a small boiler, set in brickwork near the furnace, supplies low-pressure steam, which can, when required, be introduced into the tubular bridge, and allowed to escape in numerous jets over the surface of the roasting ore.

The mineral to be operated on is introduced into this furnace, and the heat slowly and cautiously raised. As soon as the charge has arrived at a red heat the tap is turned, and as much steam blown into the hearth as can be safely introduced without so far reducing the temperature as to materially check the activity of the various chemical decompositions which it is desired to effect. At the expiration of four hours from the time of charging, the operation is usually completed; and the ore, after being withdrawn and allowed to cool, is taken to a mill, in which it is ground to a fine powder, with the addition of from 6 to 12 per cent. of common salt, and 2 to 3 per cent. of sulphate of iron. A charge of this mixture, weighing 300 lbs., is now introduced into a similar furnace. This is raised to a red heat, and the steam admitted as before, care being taken to keep the contents of the apparatus constantly stirred. The temperature is now gradually increased, and at the end of from ten to sixteen hours, according to the nature and richness of the ore, the operation is complete.

The apparatus employed for the purpose of solution and precipitation will be understood by reference to Fig. 6918, which represents a vertical section of the whole arrangement.

6918.

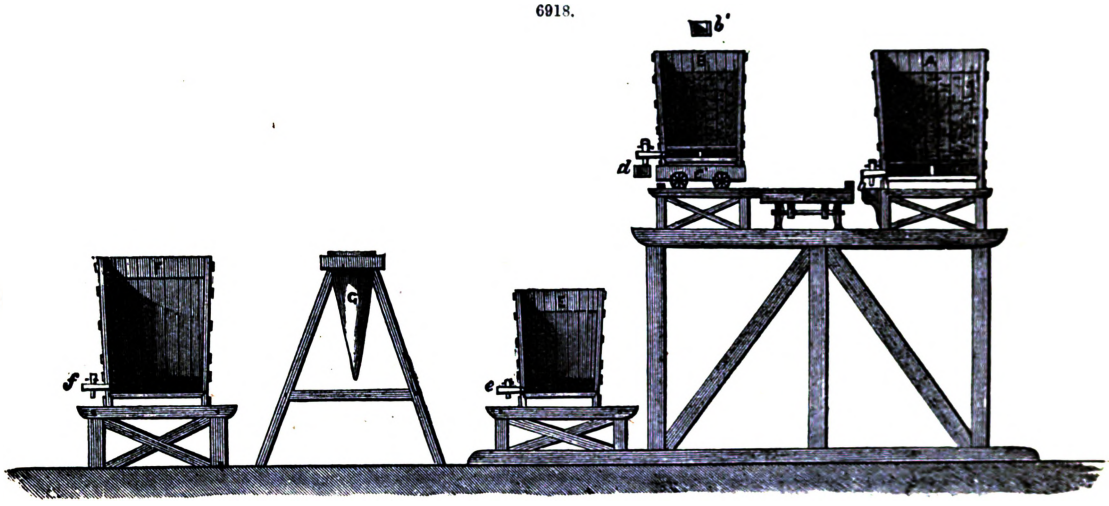

In addition to chloride of silver, which is insoluble in water, the ores contain a certain amount of copper, zinc, nickel, cobalt, iron, which, being present in the form of sulphates and chlorides, are readily dissolved in that menstruum. Into each of the tubs A, first series, the roasted ore is introduced, and boiling water is allowed to percolate through the several charges during a period of six hours. By this means all the soluble salts enter into solution, and passing through the filter *a*, are conveyed by the trough *b* into suitable tanks, in which they are precipitated by lime water, and, if found to contain a sufficient amount of silver, are subsequently treated by fusion with lead ores in a blast furnace.

The liquors falling into *b* are from time to time tested by sulphide of ammonium, and as soon as no further precipitate is obtained on adding to a sample a few drops of this reagent, the operation is considered to be finished, and cold water is passed through the tubs for the purpose of reducing the temperature of the residues, which must not until quite cold be subjected to the action of the solution of hyposulphite of soda.

The pulverized ore remaining in the several vessels A, which has been thus freed from all the different salts soluble in hot water, is now transferred to the tubs B, which, like the first, are furnished with filters and false bottoms. These are placed on a level with the tub A, between which and the vessels B is a small railway on which is the car *c*. The tubs B stand on a low truck *c'*, which can be run from the position shown, on to the wagon *c*, and afterwards made to traverse, either backwards or forwards, parallel with and in close proximity to the line of tubs A. The vessel *b*, after receiving a charge of 200 lbs. of the residual ore from one of the tubs A, is taken back to its place and there treated with a cold aqueous solution of hyposulphite of soda

brought from a tank by means of the trough *b'*, and allowed to percolate slowly through the mass. In this way the chloride of silver is taken up in the form of a double salt and passes through the filter in the bottom of the tub into the trough *d*, by which it is conveyed to the precipitating tubs E, F.

The time necessary for the completion of the operation is more or less influenced both by the richness of the ores and their state of mechanical division, the richest samples containing 15 per cent. of silver, requiring as much as forty-eight hours before becoming sufficiently impoverished; whilst the poorer ones, affording about 1 per cent. of silver, generally require but twelve hours for their treatment. In the case of ores not containing above 7 per cent. of silver, one chlorination and lixiviation is found sufficient, but when richer ores are operated on it becomes necessary to have recourse to two distinct processes of lixiviation, together with an intermediate roasting with salt and sulphate of iron. The lixiviation is known to be complete when the liquors dropping from the tubs no longer afford any traces of a precipitate on the addition of a few drops of sulphide of ammonium, and the residues are then removed, and, after being dried, fused in a blast furnace for copper.

The liquor flowing through the filters in the tubs B is conducted by the trough *d* into the vessels E, F, of which there are ten, six holding 40 gallons each, and four of the capacity of 80 gallons. The precipitant here employed is a polysulphide of sodium, produced by fusing common soda ash with sulphur, and subsequently boiling the product, dissolved in water, with sulphur in a finely-divided state. The solution thus obtained is taken in large stone jars to the precipitating tubs, and poured into the argentiferous liquors so long as a precipitate is produced by the introduction of an additional quantity. The contents of the tubs, after being well stirred, are allowed to settle, and a sample of the clear liquor having been taken in a test-tube, a little of the solution of sulphide of sodium is added.

If a dark-coloured precipitate is formed, it shows that a portion of the silver still remains in solution, and a further supply of the alkaline sulphide is required in the precipitating vessels. If, on the contrary, the addition of polysulphide of sodium has not the effect of producing a dark precipitate, it becomes probable that too large an amount of the sulphide may have been added to the argentiferous liquor. In order to ascertain this fact, some fresh liquor, holding the double salt of silver in solution, is added to a sample taken from the tub under examination. Should a precipitate of sulphide of silver appear, fresh argentiferous liquor must be carefully added to the tub until no further reaction is observed. When this point has been attained, all doubt as to whether the whole of the silver has been precipitated on the one hand, and that no excess of the precipitant has been employed on the other, is removed by the addition to one sample of a few drops of a weak solution of common salt, and to another, of a small quantity of acetate of lead.

If no precipitate of chloride of silver is produced by the addition of chloride of sodium, it is a proof of that metal having been completely removed; and should no discolouration take place on the addition, to the other sample, of a solution of acetate of lead, it shows that no excess of the precipitant has been added.

Six hours are now allowed for the flocculent precipitate to settle at the bottom of the tubs, after which the clear liquor is siphoned off into a reservoir beneath the floor, and the black slimy sulphide drawn off by the taps *e, f*, to be placed in a filter-bag of close canvas.

The spent liquors from which the sulphide of silver has been precipitated are afterwards pumped from the tank beneath the floor of the establishment to another above the level of the row of tubs A, from which they are drawn off, as they may be required, for the lixiviation of a subsequent charge of roasted ore.

The pasty sulphide of silver as drawn from the precipitating tubs is placed in conical canvas bags G, supported on wooden frames, and allowed to drain. After standing in the filter until it has ceased to drip, the pasty mass, together with the enclosing bag, is placed under a screw press, and the remaining moisture expressed as completely as possible. The precipitate is now removed from the bag, dried, and, after being replaced in the filter, is washed with hot water for the purpose of removing the adhering soluble salts, of which sulphate of soda is the chief ingredient. The sulphide of silver, thus purified, is again dried, and afterwards heated to redness in a muffle, through which a current of air is allowed to circulate. In this way the sulphur is almost entirely burnt off, and at the expiration of about two hours the entire mass has assumed the metallic condition.

This metallic residue is now fused, in charges of about 300 lbs., in large plumbago crucibles, and any traces of sulphur which it may still retain removed by the addition of metallic iron, with which it forms a ferruginous sulphide readily skimmed from the surface of the metal. A small quantity of a mixture composed of wood-ashes and bone-ash is now thrown on the surface of the metallic bath, and this, on being carefully scraped off, leaves the fused silver in a condition suitable for casting into ingots. Bars produced by this process usually contain from 980 to 985 thousandths of silver.

Smelting.—Cupellation.—The amount of silver extracted from ore by smelting is small compared with that produced by amalgamation; but smelting processes are economically employed when advantage can be taken of the affinity which lead possesses for such ores, when in a fused state. Lead in this condition renders a similar service to that performed by mercury at lower temperatures. The furnace commonly employed on the continent of Europe, where the lead to be operated on is often subjected to cupellation without any preliminary concentration of the silver, is represented, Figs. 6919, 6920, of which the first is a vertical section, and the second a section at the level of the tuyeres.

This apparatus is a reverberatory furnace, consisting of a circular hearth A from 9 to 10 ft. in diameter, sloping from all sides towards the centre, built of bricks *b*, set on edge on a layer of broken slags *c*. On this is laid a bed of marl *a*, which is firmly beaten in, when in a damp state, and renewed after each operation. When good marl for this purpose cannot be obtained, a mixture of clay and lime, or clay and wood-ashes, is employed. This bed of marl constitutes the cupel,

which is heated by means of fagots of brushwood burnt in the fire-place B. The roof of this furnace consists of a sheet-iron dome C, which may be suspended by chains from the crane D, and which is internally plastered with clay.

The cupelling furnace has five openings; one through which the flame from the grate enters the hearth; two, *d*, through which the nozzles pass supplying the blasts to the surface of the metallic bath, for the purpose of oxidizing the lead, and which also assist in carrying the resulting litharge towards the annular space before referred to; the aperture E is employed for the introduction of the discs of lead to be cupelled; and F is that through which the fused litharge makes its escape from the furnace. At the commencement of the operation this last opening is closed by the edge of the layer of marl; but as the cupellation proceeds, it is from time to time cut down, so as to keep the channel constantly at the level of the metallic bath. The litharge thus flowing from the apparatus accumulates on the floor of the smelting house, where it solidifies, and from whence it is removed.

6919.

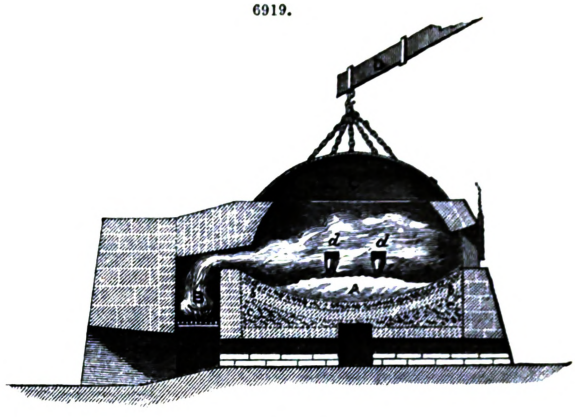

6920

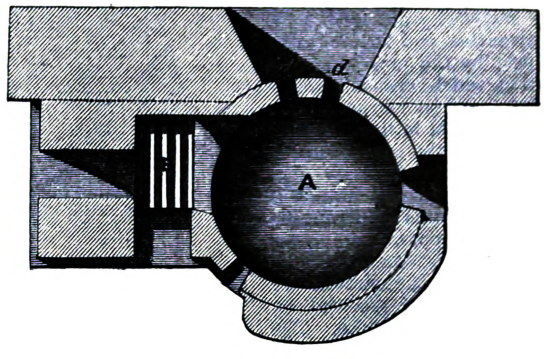

Before commencing a cupellation, it is necessary to prepare the cupel; and for this purpose, after lifting the iron dome, the old cupel, which has become thoroughly impregnated with litharge, is broken up and removed, in order that it may be passed through the blast furnace. The brick bottom of the apparatus is now moistened with water, and successive layers of finely-ground marl are well beaten in whilst in a somewhat damp state. The iron covering is replaced when the cupel has become sufficiently dry, and all the joints are well secured by luting them with clay.

The furnace is now charged with about 8 tons of lead, which, to prevent injury to the bottom, is laid on a bed of straw; the fire is lighted, and the metal rapidly begins to melt. As soon as the fusion of the discs is completed the bellows are slowly set in motion, and the surface of the bath becomes covered with a dark-coloured powder, consisting of oxide of lead, associated with various impurities. These pulverulent matters do not enter into fusion; but the refiner now and then throws a shovelful of coal-dust on the surface of the bath, and by the aid of a billet of wood, fixed crosswise on the end of an iron bar, draws the impure oxides towards the hole through which the litharge escapes, and finally on to the floor of the works. After the expiration of a short time fused litharge begins to make its appearance; but that at first formed, being impure, from the presence of other oxides, is usually laid aside, and not mixed with the purer descriptions which soon follow; these are generally sold for glass-making and other purposes, in preference to being again reduced to the metallic state. The litharge produced during the last period of the cupellation invariably contains a considerable amount of silver, and, after being reduced to the metallic state, forms a portion of the charge worked in a subsequent operation.

The blast is now slightly increased, and the oxidation proceeds rapidly; small flaps, or valves, being frequently fitted to the ends of the nozzles, for the purpose of checking its strength, and distributing it more evenly over the surface of the fused metal. The operation is continued in this way until almost the whole of the lead has been converted into oxide; and the silver, retaining only traces of that metal, remains in the cupel, in the form of a metallic cake.

At the moment the oxidation of lead entirely ceases, a phenomenon known as the brightening takes place, and the operation is then known to be terminated.

As soon as the operation is thus perceived to have terminated, the refiner throws water into the hearth, and removes the solidified cake of silver, which usually still retains a sufficient amount of lead to render its further purification necessary.

The purification of the silver obtained by the process just described is frequently effected in a small reverberatory furnace, of which the bottom is composed of bone-ash, tightly rammed, whilst in a damp state, into an iron ring, and afterwards so hollowed out as to contain the bath of fused metal. The cupel, which must be thoroughly dry, and ought therefore to be prepared some time beforehand, is, whilst the furnace is still cold, so supported on bricks against abutments prepared for that purpose, as to form the bottom of the apparatus. It is charged with about 1 cwt. of the impure silver to be operated on, and the firing is continued until a bright red heat has been

attained; the silver, which has by this time become fused, being exposed to the oxidizing influences of the flame. In this way the lead contained in the alloy becomes oxidized, and the resulting litharge is absorbed by the cupel, of which the temperature is sustained until the oxidation of all but the last traces of lead has been produced. When this point has been attained, the surface of the fused metal becomes exceedingly brilliant, and reflects, as in a mirror, all the irregularities of the interior of the crown.

The bottom of the cupel is now pierced by a pointed iron bar, and the silver is run out into moulds, previously heated on a ledge of the furnace. In order to prevent the spirting, or vegetation, of the bars, they are covered whilst cooling by a piece of dry wood, kept down by a weight; and in case of any irregularities making their appearance on the surface of the ingots, they are subsequently removed by hammering. This operation altogether occupies from four to five hours, and the resulting bars usually contain from 997 to 998 thousandths of silver. The actual loss of silver is almost inappreciable; but the diminution in weight experienced, on the crude metal from the cupelling furnace, is from 2½ to 5 per cent.

In the English system of treating argentiferous lead, the lead obtained by the different processes before described, in addition to silver, contains various impurities, such as tin, copper, and antimony, which, when the metal is subjected to direct cupellation, are removed by skimming; but when the previous concentration of the silver by crystallization is resorted to, they materially interfere with the operation, and require to be removed by the process of calcination, which consists in keeping the fused lead exposed at a cherry-red heat to the oxidizing influences of the gases passing through a reverberatory furnace, in which the calcination is effected. By this treatment the antimony, copper, and other impurities become oxidized, and, rising to the surface, are skimmed off, and removed by means of an iron rake. The length of time necessary for the purification of hard lead obviously depends on the nature and amount of the impurities with which it is associated; and consequently some varieties will be sufficiently softened at the expiration of twelve hours, whilst in other instances it becomes necessary to continue the operation during several days. The time necessary for sufficiently softening the argentiferous lead obtained from the Castilian furnace, when working ordinary ores, is about thirty-six hours.

The charge of the reverberatory furnace, which is about 11 tons, is first fused in a large iron pot, set in brickwork at the side, and is subsequently ladled into it through a sheet-iron gutter prepared for that purpose. The amount of coals required for the calcination of a ton of ordinary hard lead is generally somewhat less than 3 cwt. The softened lead is cast into pigs, and is in that form taken to the crystallizing pots.

6921.

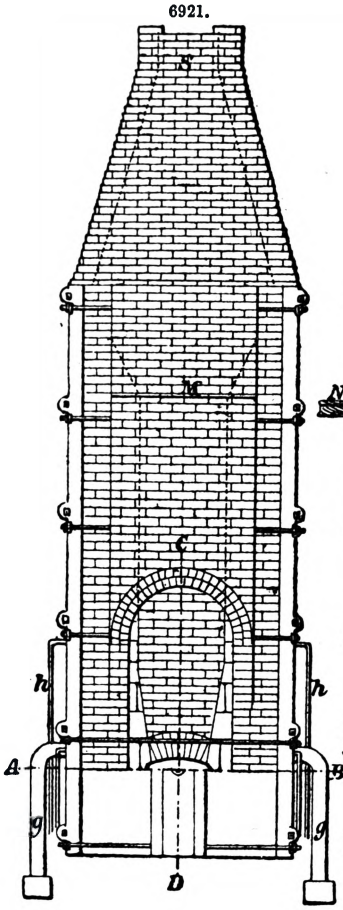

6922.

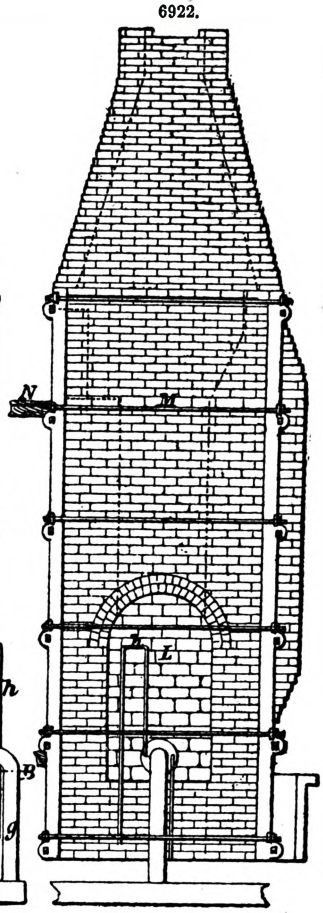

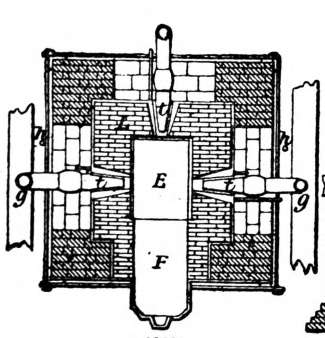

6923.

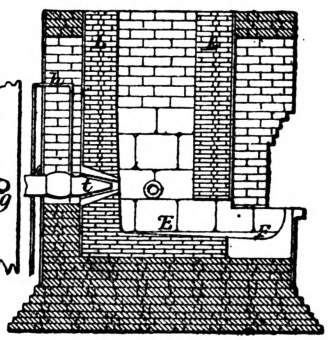

6924.

Smelting in Nevada.—The ore from the Montezuma ledge, Nevada, is of peculiar character, consisting chiefly of the oxides of lead and antimony carrying a small percentage of silver, averaging, by assay, about $80 a ton. It is sometimes hard, massive, and compact in character, while the larger proportion is friable,

showing a fibrous structure. The method of treatment of this ore presents some novelties. It consists of smelting the ore in a shaft furnace, by which means crude metal is obtained, amounting to 40 or 50 per cent. of the charge of ore, and consisting of lead, antimony, and silver. The shaft furnace employed for the smelting of the crude ore is shown by Figs. 6921 to 6924. Figs. 6921, 6922, a front and side elevation; Fig. 6923, a horizontal section through A B; and Fig. 6924, a vertical section through C D of Fig. 6921. The total height of the furnace is about 40 ft. The hearth is built of stone, cut from trachytic rock that occurs a few miles south of the works. The shaft is of common brick, with a lining of fire-brick from the hearth up to the throat.

E is the hearth, or sole; F the sump, or receiver, into which the metal runs on being tapped from the furnace; *t*, tuyeres; *g*, blast-pipes; *h*, pipes to supply water to the tuyeres; L, lining of the furnace; M, throat; N, floor for feeding ore; S, stack.

The capacity of one of these furnaces is from 12 to 13 tons a day of twenty-four hours. The ore being broken into small pieces is spread upon the charging floor and mixed with flux. This sometimes consists of limestone, but generally of slag, or both together. Litharge, the product of the cupelling furnace, is also sometimes used with fresh ore. The ore for the charge, being mixed with about 25 per cent. of flux, is supplied to the furnace with a sufficient quantity of charcoal, that averages about 15 bushels to the ton of ore. About 100 lbs. of the mixed charge and coal is fed to the furnace at once, the supply being continuously kept up as the operation of smelting proceeds. The blast is supplied by a fan-blower, which is driven by the steam-engine.

When the furnace is in regular operation the slag is discharged continuously, while the metal is tapped off, at intervals of an hour or two, into an iron receiver, whence it is dipped out and cast in pigs or ingots of convenient size for further handling.

The yield of metal is from 45 to 50 per cent. of the ore smelted; one furnace smelting 12 tons of ore in a day, supplying consequently about 5 tons of crude metal. The ore originally containing $80 a ton in silver, yields metal which contains from $150 to $200 a ton. The slags are constantly examined. Usually they are quite poor, but if found to contain an available percentage of metal, are broken up and returned to the furnace with a fresh charge of ore.

The consumption of charcoal in this smelting process is usually about 15 bushels to the ton, but sometimes exceeds that quantity. It is made from the nut pine.

The refining or calcining furnace for the sublimation of the antimony contained in the crude metal, and the consequent improvement of the lead, consists of a bath or cast-iron pan, about 13 ft. long by 5 ft. 8 in. wide and 8 in. deep, the metal being an inch thick. The pan is set in brickwork, the construction of which is shown by Figs. 6925 to 6928. Fig. 6925 is a side elevation; Fig. 6926 a horizontal section through E F; and Figs. 6927, 6928, transverse sections through A B and C D of Fig. 6925.

6925.

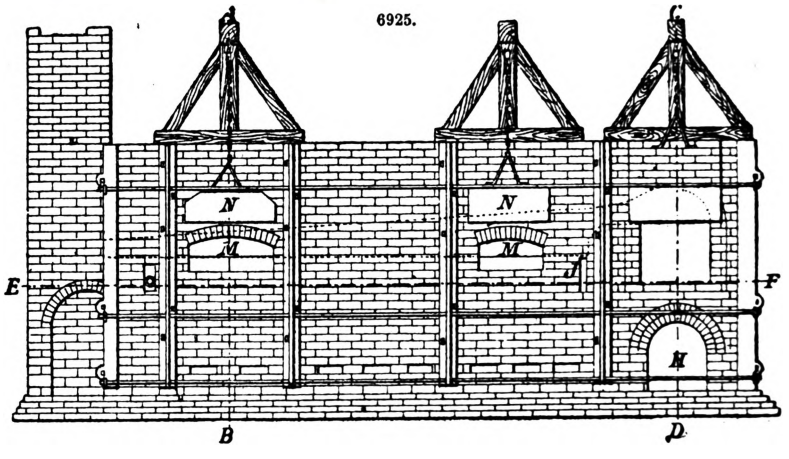

6926.

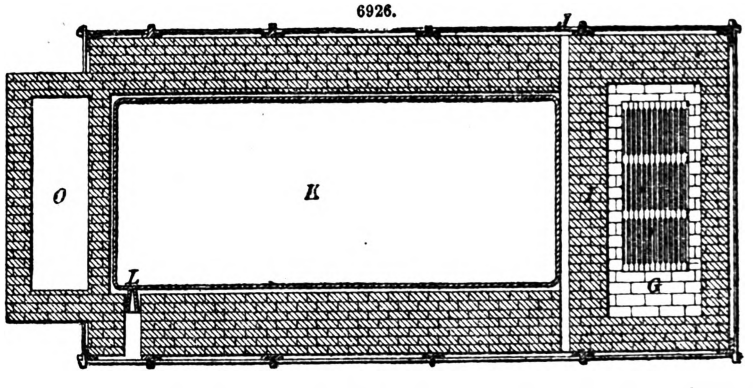

The pan rests on a substantial foundation, and is enclosed by side walls of common bricks, about 10 in. high, over which an arch, Fig. 6928, is turned. A narrow space is left between the

pan and the enclosing masonry to allow for expansion. At one end of the structure is a fire-place and ash-pit; the flame passes over a bridge which separates the fire-place from the pan, and thus

6927.

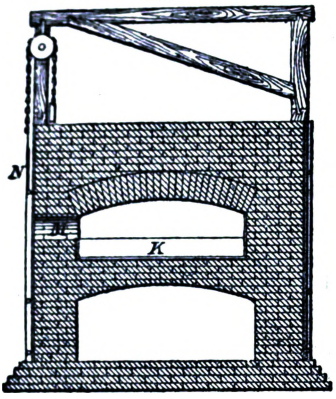

6928.

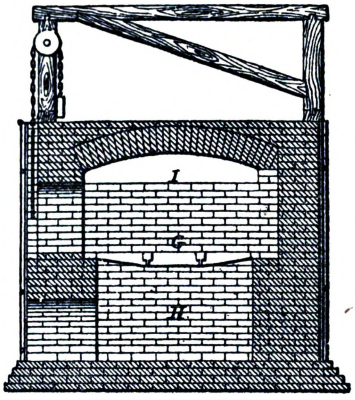

over the surface of the metal contained in the pan toward the stack at the opposite end. There is a horizontal channel passing through the bridge behind the pan, opening at the sides of the furnace and communicating by vertical passages with the interior, by which means air may be admitted to the charge. Doors are provided in the side of the furnace for the purpose of skimming off a crust or scum, consisting of lead and antimony, that collects on the surface while the operation of calcining is in progress. The charge is also introduced through these doors. There is a tap near the end of the pan on one side for the purpose of drawing off the refined metals. At the base of the stack is a chamber for the collection of the oxidized antimony that may condense in the slack and fall to the bottom. The whole structure is firmly bound together by irons and bolts. In the figures, G is the fire-place; H the ash-pit; I the bridge; J the air-channel through the bridge; K the pan; L the spout; M the openings for putting in and working the charge; N the doors; O the chamber at base of stack for the accumulation of the oxidized antimony.

To set this furnace in operation the metal may be first melted and introduced in a fused state to the pan, or, what is more common, the pan is heated to redness and the pigs of crude metal are laid upon the pan-bottom, when melting ensues. The fire may be quite moderate, the only fuel used in this case being sage brush. The antimony is oxidized and passes up the stack, a part to escape, a part condensing in the chimney. The charge of the pan at the outset is some 6 or 8 tons, but as the molten metal diminishes in bulk by the sublimation of the antimony new bars are added to keep up the supply. A scum collects on the surface of the molten metal, which is removed by scrapers from time to time. This consists chiefly of lead and antimony with very little silver. While this refining process was still practised at the works, these skimmings were collected, remelted, and cast in bars to be sold for type-metal, Babbitt-metal, and other purposes. The alloy consisted of 71 per cent. of antimony with 29 per cent. of lead.

The lead in the pan is gradually enriched by this method of concentration, and assays are taken from time to time, usually at intervals of twelve hours, for the purpose of watching the progress of the operation. When the value of the lead has been brought up to about $350 or $400 a ton, it is drawn off in moulds, and then subjected to treatment in the cupel furnace.

The cupelling furnace is of the kind commonly used in England. Figs. 6929 to 6931 show the method of its construction. Fig. 6929 is a side elevation; Fig. 6930, horizontal section on the line A B of Fig. 6929, and Fig. 6931 is a vertical section on the line C D of Fig. 6930. F is the fire-place; G the ash-pit; H the bridge; I the test-ring, or hearth; J the tuyere; K, K, supporting

6929.

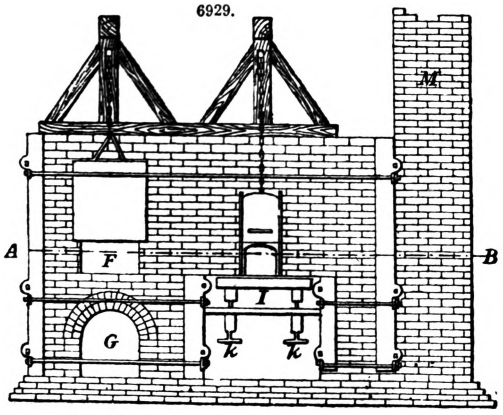

6930.

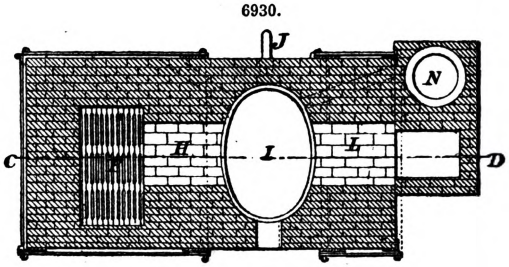

and adjusting screws for the test-ring; L the flue leading to the stack M; N a melting pot or pan in which the metal may be prepared for the hearth.

The hearth consists of bone-earth, prepared from the bones of cattle. The bones are burned and then pulverized in the stamp-mill, and being moistened with water that contains a little alkali, leached from wood-ashes, the mass is beaten compactly into the test-ring. This is oval in form, being 4 ft. long by 3 ft. wide. It is a rim of iron 7 or 8 in. deep, having bars across the bottom to sustain the hearth of bone-earth. The latter being prepared in the rim it is very carefully dried, and the ring is then introduced into the cupel chamber, supported upon screws, by means of which it may be elevated or lowered, or inclined in one direction or another. When properly adjusted, it is heated, very gently at first, in order to avoid cracking. The heat from the fire-place passes over the bridge into the cupel chamber, and thence by the flues to the stack. When the hearth is well heated the lead is placed upon it, and a blast of air is introduced by means of a fan-blower and tuyere.

6931.

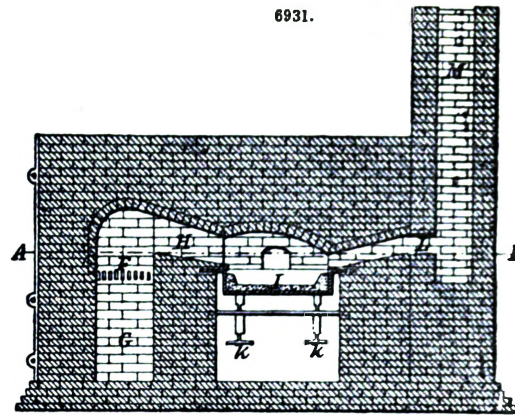

This acting upon the surface of the lead, the metal is oxidized, and the resulting litharge is allowed to run off through gutters made for its passage, in the surface of the hearth, into vessels placed below for its reception. As the lead is gradually oxidized, fresh supplies of metal are introduced, either in the form of pigs or in a molten state, the pan N being provided for the purpose of fusing the metal if desired. By this means the metal on the hearth is constantly enriched, and when the button of accumulated silver has become as large as may be desirable, the addition of lead is discontinued and the oxidation carried on until the lead is nearly all removed, leaving a mass of silver, of a high degree of fineness, upon the hearth. The litharge produced by this operation contains some silver. The richer portion is returned to the shaft furnace and mixed with the charge of fresh ore.

Smelting in Sweden.—At the Sala mines the ore is obtained in the form of argentiferous galena, with which is found a variety of other metallic sulphides, as pyrites, zinc blende, and so on. The ore, after being carefully sorted, washed, and stamped, is partially treated in a blast to a first smelting. It is afterwards operated upon in two blast furnaces, similar to that represented in Figs. 6932, 6933. The hearth is made of brasque, and is prolonged outwards and forwards, thus forming a fore-hearth. The charge is composed of the richest ore from the first crushing, and of the slimes from the washing process, together with the regulus obtained from the first smelting and that derived as a by-product during the second smelting, the regulus having been first calcined in an open kiln. Formerly the ores also were subjected to a previous calcination, but the ores are now smelted in a raw state. It is from these substances —stuff, slime, and regulus—that the argentiferous lead obtained in this process is derived; other ingredients being introduced partly to produce a good fusible slag, and partly to assist in freeing the metals from their combination with sulphur. For the formation of a slag, the proportion of which must bear a proper relation to the production of metal and regulus, there is added some easily fusible slag, containing less lime and more protoxide of iron as bases, such a slag as that obtained from the lead smelting. The chief points are, that it flow easily, and that it contain sufficient protoxide of iron; hence it should be composed of tribasic silicates, because the presence of a greater proportion of silica in the slag increases the loss both of the silver and the lead. To assist in reducing the lead from its sulphuretted condition, metallic iron was formerly employed; but it has been found that the use of it may be dispensed with by introducing a proper admixture of iron pyrites in addition to the regulus from the lead and the raw-smelting; both the pyrites and the regulus having been previously calcined, the amount of protoxide of iron which these contain appears to be sufficient to assist the reduction and to induce the formation of a good slag. These substances are charged in the following proportions;—

6932. 6933.

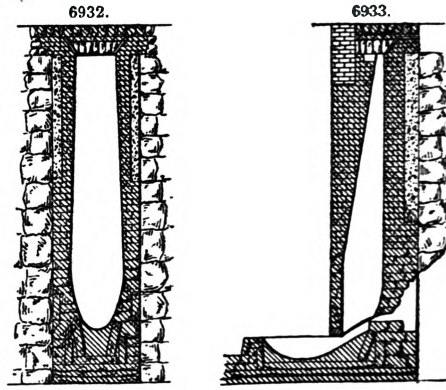

	Parts.
Stuff ore, containing on an average from 0·13% to 0·28% of silver, and 14% to 34% of lead	100
Slimes from the washing, containing on an average from 0·2% to 0·25% of silver, and from 23% to 31% of lead	125
Roasted regulus, containing about 0·125% of silver	96
Roasted iron pyrites	18
Slag from previous lead-smelting	750

To which are added the old cupel hearths and litharge derived from the cupel. The product of this smelting consists of ore-furnace lead containing an average of 86 per cent. of silver, regulus, and slags. The lead is cupelled and the silver refined in an ordinary way.

Pattinson's Process.—This process is founded on the circumstance, first noticed in the year 1829, by H. L. Pattinson, of Newcastle-on-Tyne, that when lead containing silver is melted in considerable quantities in suitable vessels, allowed slowly to cool, and at the same time kept constantly stirred, at a temperature near the melting point of lead, metallic crystals begin to form. These sink to the bottom, and, on being removed, are found to contain much less silver than the lead originally operated on. The still fluid portion, from which the crystals have been thus removed, will at the same time be found to be proportionately enriched.

This operation is usually conducted in a set of from 9 to 12 pots, which, if worked by hand, each contain 6 tons of metal; or, if cranes be employed, are 5 ft. 4 in. wide and 2 ft. 6 in. deep, and contain 10 tons of argentiferous lead. Each of these pots, Figs. 6934, 6935, is provided with a separate fire-place, the heat from which is made to pass around it by means of a wheel flue, which can be closed at pleasure by a damper; the products of combustion finally escape into a large arched flue parallel with the line of pots.

6934.

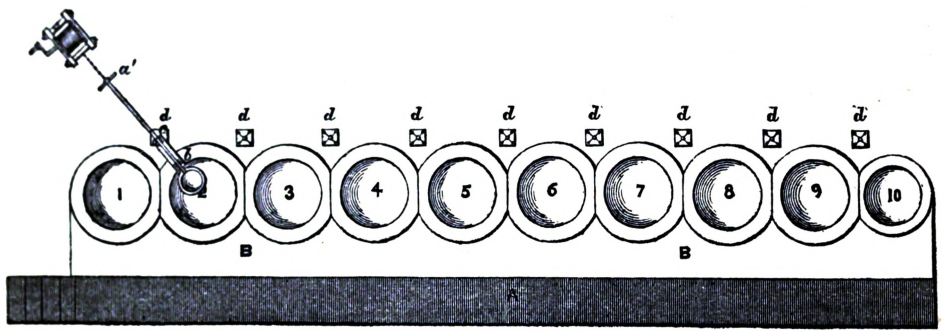

6935.

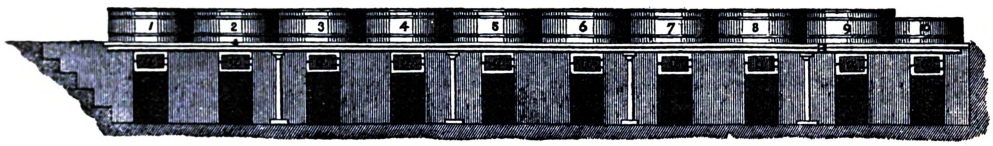

We will suppose that the lead under treatment contains about 20 oz. of silver a ton, and is introduced into pot 5, Fig. 6934. This metal when fused is carefully skimmed with a perforated ladle, and the fire at once withdrawn. The cooling of the metal is now hastened by sprinkling water on its surface; and whilst the temperature is being thus lowered, it is kept constantly stirred with a chisel-pointed iron bar, called a slice. All those portions which become solidified, and adhere about the side of the pot, are also removed and forced under the surface of the metal, in order that they may again become melted. Under this treatment, crystals soon begin to make their appearance; and as they fall and accumulate at the bottom, they are removed by means of a large perforated ladle, in which, after being well shaken, they are first allowed to drain over the pot whence they have been taken, and afterwards carried over to the next pot, 6, to the left of the workmen. This operation is continued until about two-thirds of the lead originally present in pot 5 has been transferred into the form of crystals to pot 6, at which period the lead remaining in pot 5 will contain about 40 oz. of silver a ton, whilst that transferred to 6 yields only 10 oz. The rich lead in the bottom of 5 is now ladled into the pot 4 next on the right.

In this way a fresh supply of calcined lead is constantly introduced, the resulting crystals passing continually to the left of the feeding pot, whilst the enriched lead, remaining in the bottom, is ladled into the pot on the right. Each pot in succession, when it has become filled with metal of the proper produce for silver, is in its turn crystallized; the poor lead passing to the left, and that which has become enriched to the right in the series. By this means the crystals obtained from the pots to the left of the feeding pot gradually become deprived of their silver, whilst the rich lead passing to the right is continually enriched. The final result therefore is, that at one end of the line of kettles the lead contains but little silver, whilst at the other extremity it becomes exceedingly argentiferous.

The desilverized or market lead obtained by this process should never contain above 12 dwt. of silver a ton, and is frequently much poorer, whilst the rich lead is sometimes so concentrated as to yield 600 oz. a ton. This rich lead is passed to the refining furnace for cupellation.

The ladle employed, when manual labour is made use of, is 16 in. in diameter, 5 in. in depth, and pierced with ½-in. holes. When cranes are employed, the ladles are 20 in. in diameter, 6½ in. in depth, and are pierced with holes ¾ in. diameter; thickness of iron, ½ in.; length of ladle, 9 ft. 4 in. The large baling ladles used for turning back the bottoms are 14 in. in diameter and 8 in. deep, and have a handle 7 ft. long.

Two crystallizers are employed in working each pot, and one fireman every twelve hours is required for each set. By the use of cranes a 10-ton pot can be worked as quickly, and at the same expense for labour, as a 6-ton pot by hand ladles.

Fig. 6934 is a plan, and Fig. 6935 an elevation, of a set of Pattinson's pots, fitted with cast-iron cranes arranged according to the most approved system; 1 to 9 are working pots, and 10 the market pot, out of which the desilverized lead is ladled into moulds; and which, from only receiving the

crystals from 9, and not having a bottom of enriched lead left in it, has only two-thirds the capacity of the other pots.

A long ash-pit A extends the whole length of the set, and is partially covered by the iron platform B, supported on iron pillars. The fire-places *a* are provided with iron doors.

When, during the operation of taking out crystals, the perforated ladle becomes chilled, it is heated to the proper temperature by being dipped into the pot of hot lead into which they are turned over.

In order to work by the aid of this arrangement, the potman sinks the ladle sidewise to the bottom of the kettle, and having turned it over, so as to be full of crystals, he attaches a hook to the cross-handle *a'* of the ladle, Fig. 6934, which is then withdrawn by the other workman turning the winch.

In doing this, the iron shank slides over the roller *b*, at the end of the crane *d*; and as soon as it is withdrawn from the fused metal, the first workman, who guides the handle during the operation, slips it into one of the cheeks *c*, at the back of the crane, where it becomes firmly secured. The ladle, full of crystals, is thus suspended over the pot from which it has been withdrawn, and after being allowed a short time to drain, it receives a few shakes by jerking the iron handle. The crane is now swung round, the shank slipped out of the catch, and the crystals deposited in the next pot on the left. This is continued until the necessary amount of crystals has been withdrawn, when the rich lead remaining in the bottom is taken out, in the same way, by a ladle without perforations, and turned over in the next pot on the right. In some establishments the lead remaining in the bottom of the rich pot 1 is further concentrated by allowing it to cool to the crystallizing point, and then pressing it with the convex side of one of the large perforated ladles. The still liquid alloy is thus made to enter the bowl through the holes with which it is pierced, and is taken out with a smaller unperforated dipper. The lead thus obtained will evidently be richer than the crystals remaining in the kettle.

Assay of Silver. — The assay of argentiferous galena is, in England, usually conducted in a wrought-iron crucible of plate iron, of good quality, turned up in the form of a crucible, and carefully welded at the edges; the bottom is closed by a large iron rivet, securely welded to the sides, and the whole finished by the hammer on a properly-formed mould. To make an assay in a crucible of this description, it is first placed in the assay furnace, and heated to dull redness; and when it has become sufficiently hot, 400 grains of the pulverized ore, intimately mixed with its own weight of soda-ash, about 30 grains of pearlash, and from 8 to 10 grains of charcoal powder, or lamp-black, are introduced by means of a long copper scoop. With certain varieties of ore, the addition of a small quantity of common salt, or fluor spar, is found to be beneficial for the production of a thoroughly liquid slag; fluor spar being particularly advantageous in the case of highly silicious ores. On the top of this is placed a thin layer of dried borax; and the crucible, which, for the introduction of the mixture, has been withdrawn from the fire, is at once replaced in the furnace. At first the contents of the pot boil somewhat violently, and therefore, in order to avoid loss, the crucible should be made of sufficient capacity to prevent any portion of the mixture being projected over its sides. At the expiration of from eight to ten minutes, the ingredients in the crucible will be observed to be in a state of tranquil fusion; and the pot must now be removed from the fire, and its contents briskly stirred by means of a small iron rod, flattened at the end in the form of a spatula. Any matters adhering to its sides are also scraped downward into the bottom of the pot, which is replaced in the furnace, and, after being closed with an earthen cover, is, during three or four minutes, heated to full redness.

The crucible is now seized by a strong pair of bent tongs on that part of its edge which is opposite to the lip; and, after being removed from the fire, its contents are rapidly poured into a cast-iron mould, having internally the form of an ordinary egg-cup. The sides of the pot are now carefully scraped down with the chisel-edged bar before referred to, and any adhering particles of lead and slag are obtained by sharply striking the edge of the crucible against the top of another cast-iron mould, similar to that into which the assay was first poured. When sufficiently cold, the contents of the mould are readily removed by merely turning it over; and the metallic button, after being separated from the adhering slag, is carefully cleaned by means of a hard brush, and weighed, in order to determine the percentage yield of lead. When a metallic shot has been obtained in the second mould, it must be freed from adhering slag, and weighed with the larger button. The alloy thus obtained is cupelled, in order to determine the amount of silver which it contains.

Ores of silver, in which that metal exists in the form either of oxide, sulphide, or chloride, in a gangue principally consisting of silica or of carbonate of lime, are usually fused with a mixture of litharge and carbonate of soda, to which a small quantity of finely-powdered charcoal is added; and by this means a button of alloy is obtained, which is subsequently treated by cupellation.

The proportion of litharge to be employed for this operation must be varied in accordance with the circumstances of the case, as the resulting button of alloy should not be too rich in silver, since, in that case, a portion might be lost in the slags; neither should it, on the other hand, be too poor, as the cupellation would then occupy a long time, and a loss through absorption be the result. In ordinary cases, where the silver principally exists in the form of chloride and sulphide, and the quantity operated on is 400 grains, a button of alloy weighing about 200 grains will be a convenient amount for cupellation. Such a result may generally be obtained by the addition of 300 grains of litharge, 400 grains of carbonate of soda, 150 grains of borax, and from 7 to 8 grains of finely-powdered charcoal. The whole is to be well mixed, and introduced into an earthen crucible, of which it should not occupy more than one-half the capacity.

The crucible is now placed in an assay furnace of the usual form, care being taken to withdraw it from the fire as soon as a thoroughly liquid and perfectly homogeneous slag has been attained. When it has sufficiently cooled, the crucible is broken and the metallic button obtained, which, after being properly cleaned, is passed to the cupel. When a great degree of accuracy is required, it is always best to break the pot; but when numerous assays have to be made on ores of nearly

the same tenure, the assay is sometimes poured into an iron mould, and the crucible is employed for making other fusions. In this, and all similar cases, it is, of course, essential to ascertain, by previous experiment, the proportion of silver contained in the lead obtained by the reduction of the litharge, in order to obtain the necessary data for calculating the requisite deduction to be made from the results afforded by cupellation. When, however, very poor litharge is made use of, the resulting lead contains so small an amount of silver that, for some commercial purposes, its presence may be disregarded; generally speaking, however, the assayer, on the receipt of a fresh supply of that reagent, ascertains, by means of careful assays, the proportion of silver which it contains, and makes the necessary correction on each assay in which it is employed.

Argentiferous minerals containing a considerable amount of copper may be generally assayed by this process, since the amount of that metal which enters into combination with the lead produced is comparatively small, and the resulting button of alloy admits of being readily cupelled by the addition, when necessary, of metallic lead. When the mineral to be assayed contains a large proportion of metallic sulphides, the addition of charcoal, or any other reducing agent, becomes unnecessary, as litharge readily attacks all the simple and complex metallic sulphides, oxidizing their constituents, with the exception of the precious metals, which form an alloy with the lead set free. The slags resulting from this operation contain the excess of litharge added, and the button of alloy produced is subjected to cupellation. The proportion of oxide of lead to be added to ores of this description varies in accordance with their composition, but it should in all cases be present in decided excess, since, should the sulphides not become completely decomposed, the whole of the silver will not be concentrated in the resulting button of alloy. For the successful assay of pure argentiferous iron pyrites, as many as 50 parts of litharge are required, whilst for mispickel, blende, copper, pyrites, grey cobalt, and sulphide of antimony, from fifteen to twenty times their weight may be employed.

It must, however, be remembered that earthy and silicious gangues usually constitute a large proportion of the bulk of the ores operated on, and consequently these excessive amounts of litharge are, in practice, seldom requisite. One of the chief objections to this method of assay is the large amounts of lead that are produced for cupellation, since pure iron pyrites afford 8·50 parts of this metal, whilst sulphide of antimony and grey copper ore yield from 6 to 7 parts.

This inconvenience may be obviated by effecting the partial oxidation of the sulphides, either by roasting or through the aid of nitre, by the skilful use of which a button of almost any required weight may be obtained. If this reagent is employed in excess it determines the oxidation of the various metallic and other oxidizable substances present, not always excepting silver itself. When, however, the mixture at the same time contains an excess of litharge, and nitre has not been added in sufficient quantity to effect the decomposition of the whole of the sulphides present, reaction takes place between the portion of sulphide undecomposed and the oxide of lead added. This gives rise to the formation of a button of metallic lead, which, combining with the silver, affords a button of alloy suitable for cupellation. The amount of nitre required to be employed for this purpose necessarily depends on the nature and richness of the ore operated on, but it must be borne in mind that 2·5 parts of nitrate of potash are sufficient to completely oxidize the constituents of iron pyrites, and that 1·5 and 0·70 parts respectively are, in the case of sulphide of antimony and galena, sufficient for this purpose.

When the ores contain a large proportion of sulphides, it is generally found most desirable to conduct the assay on the mineral after calcination. The roasting of the pulverized ore is best effected in a shallow scorifier, or earthen dish, into which a weighed quantity of the mineral to be operated on, generally 400 grains, is introduced, and then carefully roasted in the muffle of a cupelling furnace. For this purpose the scorifier and its contents should be first placed in the mouth of the muffle, and kept constantly stirred with a thin bent iron rod; care being taken to commence the operation at a low temperature, since, from their great fusibility, such ores would be otherwise liable to agglutinate. As the calcination progresses, the scorifier may be gradually pushed farther into the muffle, and thus subjected to successively increasing temperatures; as soon as sulphurous vapours are no longer evolved at a full red heat, the scorifier and its contents are withdrawn and allowed to cool. The ore, when sufficiently cold, is carefully removed from the earthen dish, and mixed, on a sheet of glazed paper, with the fluxes requisite for effecting its fusion, and the reduction of the quantity of lead necessary for cupellation. When the amount of mineral operated on is 400 grains, there should be added soda-ash 400 grains, borax 200 grains, litharge 400 grains, and charcoal 10 to 12 grains. The whole is now introduced into an earthen crucible, fused with the usual precautions, and the resulting button of lead passed to the cupel.

This is a simple and convenient method of assaying ores containing the precious metals, when large quantities of metallic sulphides are present. The process consists in subjecting the finely-pulverized minerals, mixed with granulated lead and placed in a saucer-shaped earthen vessel or scorifier, to the action of a bright red heat in an ordinary assay muffle. A portion of the lead is thus converted into litharge, which, as fast as it is produced, combines with the various silicious and earthy constituents of the veinstone, forming slags, in which the other metallic oxides produced are taken up, whilst the silver and gold form an alloy with the lead remaining at the close of the operation. The scorifiers employed for this purpose should be made of well-baked close-grained fire-clay. It is necessary that they should be compact in their structure in order to resist the corrosive action of the litharge, and that they should be capable of withstanding sudden changes of temperature without breaking.

A number of these scorifiers, corresponding to that of the assays to be made, are selected, and into each are introduced 100 grains of powdered raw ore, intimately mixed with from five to eight times its weight of granulated lead, and a small quantity of dried borax. In all cases, however, the lead should be added in excess, as the resulting slags are thereby rendered more liquid. The granulated lead used for this purpose should, if possible, be almost entirely free from silver, but this is difficult to obtain, and when it cannot be procured it becomes necessary to estimate before-

hand the amount of silver contained in the lead employed, and to make a corresponding deduction from the weight of the button afforded by cupellation.

The scorifiers, after being duly charged with the ore, lead, and borax, are taken to the furnace and introduced into the muffle, which has been previously brought to a full red heat. Their introduction at first considerably reduces the temperature of the furnace, and some pieces of charcoal should be placed in the opening of the muffle for the purpose of again raising the heat to the proper point. The muffle door is now closed, and in the course of a few minutes the lead enters into fusion, whilst white vapours are observed to rise from the assay, and the formation of litharge rapidly takes place. In proportion as the borax fuses, and the quantity of litharge increases, the contents of the scorifier soften; and as the temperature becomes more elevated, they enter into fusion, whilst the lead accumulates in the centre in the form of a large metallic globule.

When the assays have reached a bright red heat, which is usually the case in from ten to fifteen minutes from the commencement of the operation, the stopper of the muffle is removed; and the current of air which now enters causes the oxidation of the lead to proceed more rapidly. In proportion as the litharge accumulates, the slag formed by its combination with the earthy, silicious, and other matters contained in the ores, increases in quantity, and gradually extends itself over the whole surface of the lead. The door of the muffle is allowed to remain open about fifteen minutes, at the expiration of which time it is again closed, and the temperature is raised for about five minutes to full redness, for the double purpose of rendering the scoriæ as liquid as possible previously to pouring, and also to facilitate at the same time the reunion of any disseminated globules of metallic lead.

The scorifiers are now withdrawn by means of proper tongs, and their contents rapidly poured into moulds. When sufficiently cold, the buttons of lead are detached from the adhering slags by being hammered on a small anvil, and are then passed to the cupel. When this operation has been successfully conducted, the resulting buttons of alloy contain, practically, the whole of the precious metals present in the ore. It is, however, essential that the slags should be perfectly and uniformly liquid at the time of being poured into the moulds, for should they either be pasty or contain imperfectly-fused lumps, a portion of the mineral will remain unacted on, and small metallic buttons may either be enclosed in the unfused part, or remain attached to the scorifier.

When, in spite of the temperature of the muffle and the other conditions of the process having been carefully attended to, the slags do not become sufficiently liquid, it is necessary to introduce an additional quantity of borax, and in some cases a little nitre may be added with advantage. Sometimes, although rarely, it is found necessary to stir the slags with an iron rod, for the purpose of dividing any lumps that may have been formed, and to incorporate them with the more liquid scoriæ.

The cupellation of the buttons of argentiferous lead is conducted as described when treating of the assay of auriferous compounds, but as silver is at high temperatures more volatile than gold, the heat requires to be more carefully regulated than is necessary in the case of gold ores. In making all cupellations, it is necessary to bear in mind that a cupel is only capable of absorbing about its own weight of litharge, and consequently a test should always be employed a little heavier than the button of alloy to be subjected to the operation.

The results obtained are also to a certain extent influenced by the temperature at which the cupellation has been conducted, and consequently all assays are liable to a small amount of error. If the muffle is too strongly heated, the silver becomes perfectly refined, but experiences a small amount of loss through sublimation and the absorption of the cupel; whilst, on the contrary, when the temperature has not been sufficiently elevated, the button is liable to retain a small portion of lead. These two causes of error, existing at the same time in all cupellations, are often found in practice to nearly neutralize each other; although, in order to obtain uniform results from the same alloy, it is necessary to employ various minute precautions, both with regard to the temperature of the muffle and the condition of the cupels employed.

When, however, the amount of lead employed has been sufficient, the cupel is perfectly dry, is made of fine and well-prepared bone-ash, and the cupellation is conducted at a full cherry-red heat, the results obtained will, in almost all cases, be found of a satisfactory character. If the resulting buttons of silver be large, they should not be abruptly withdrawn from the muffle, but be gradually drawn towards its mouth, since their sudden removal might cause them to spirt. In the case of a very large button being obtained, it is sometimes found advantageous to cover it, immediately after brightening, and before its removal from the muffle, by another cupel kept hot for that purpose.

When it has sufficiently cooled, the metallic button is seized laterally between the jaws of a pair of strong pliers and tightly squeezed, for the double purpose of loosening it from the cupel and detaching any adhering litharge. The button is then cleaned by the aid of a stiff brush, and weighed in a delicate assay balance. When, in addition to silver, the mineral under examination contains gold, the button obtained on the cupel is first weighed, and its weight noted; it is then flattened, dissolved in nitric acid, and the gold also weighed; the difference of the two weights thus corresponds to the amount of silver present in the assay.

The weight of mineral employed for making an assay is, to a great extent, regulated by the amount of silver which the ores are supposed to contain. In Cornwall, for assays of argentiferous galena, the quantity operated on is often 1 oz. avoirdupois. In Nevada, 200 grains are commonly made use of, and the contents of the crucible are often poured out into an iron mould. Scorifications are not easily conducted, in the common muffle furnace, on much above 100 grains; but for assays of an ordinary silver ore by fusion, 400 grains are conveniently employed.

For commercial purposes, the silver contained in any given mineral is in England estimated in oz., dwt., and gr., 1 ton of 2240 lbs. avoirdupois being taken as the standard.

The details of the various methods for the reduction of silver ores are to a great extent modified in accordance with the resources of the districts in which they are employed, and consequently even a brief notice of all of them would have occupied more space than was at our disposal for the

purpose. We have therefore confined ourselves to descriptions of the more important and general methods, and of such as can be taken as types of the several systems which they represent. See FURNACE. GOLD. LEAD. ORES, *Machines and Processes employed to Dress.*

Works relating to the subject;—Lamborn (Dr. R. H.), 'The Metallurgy of Silver and Lead,' 12mo, 1861. Phillips (J. Arthur), 'The Mining and Metallurgy of Gold and Silver,' royal 8vo, 1867. Kerl's 'Metallurgy,' by Crookes and Röhrig, vol. i., 8vo, 1868. Percy (Dr. John), 'The Metallurgy of Lead,' 8vo, 1870. "U. S. Geological Exploration of the 40th parallel," vol. iii., 'Mining Industry,' by J. D. Hague and Clarence King, 4to, with atlas, Washington, 1870. Raymond (R. W.), 'Statistics of Mines and Mining,' 8vo, Washington, 1869–72.

SLEEVE. FR., *Manche*; GER., *Helm*; ITAL., *Manica*; SPAN., *Dedal largo.*

In machinery, a *sleeve* is a tubular part, resembling in form or position the sleeve of a coat, to cover, sustain, or steady another part that moves within it. A long bushing or thimble is called a sleeve, as in the nave of a wheel.

SLOTTING MACHINE. FR., *Machine à buriner*; GER., *Stossmaschine*; ITAL., *Pialla verticale*; SPAN., *Máquina para hacer muescas.*

See MACHINE TOOLS.

SPINDLE. FR., *Broche*; GER., *Spindel*; ITAL., *Alberetto*; SPAN., *Huso.*

A spindle is a slender pointed rod or pin upon which anything turns; an axis, or arbor; as, the spindle of a vane, a pinion, or a capstan. The *dead spindle* is the arbor of a machine tool that does not revolve; the spindle of the tail-stock. The *live spindle* is the revolving arbor of a machine tool; the spindle of the head-stock.

SPIRAL-WHEEL. FR., *Roue hélicoïdale*; GER., *Spiralrad*; ITAL., *Ruota elicoide*; SPAN., *Rueda espiral.*

See MECHANICAL MOVEMENTS.

SPUR-WHEEL. FR., *Roue dentée*; GER., *Stirnrad*; ITAL., *Ruota dentata*; SPAN., *Rueda de engranaje.*

See MECHANICAL MOVEMENTS.

SQUEEZER. FR., *Machine à cingler*; GER., *Presse*; ITAL., *Strettoio del ferro*; SPAN., *Apretador.*

See BLOOMING MACHINE. IRON.

STATIONARY ENGINE. FR., *Machine fixe*; GER., *Stationaire Dampfmaschine*; ITAL., *Macchina fissa*; SPAN., *Máquina fija.*

The stationary engine is the most perfect form of the steam-engine we possess. In the locomotive and the portable types, by reason of the conditions which they have to fulfil, it is impossible to apply many of those means by which steam, and consequently fuel, is economized, and the efficiency of the engine increased. In the stationary engine, any and all of the means by which these objects may be attained may be adopted, because the conditions under which it works admit of any modification being effected in the form or the arrangement of the various parts. Hence we find, in this type, economy of steam carried to its highest degree, and the most successful modes of applying it advantageously. It is for this reason that the discussion of certain improvements in the steam-engine has been reserved for the present article, which improvements, though applied to some extent to other types of engine, yet originated in this, and belong more properly to it.

Stationary engines are of two kinds, called respectively low-pressure and high-pressure engines. These terms do not refer to the initial pressure of the steam in the cylinder, but to its final pressure. The terms are, however, inappropriate, since they do not express the distinctive difference between the two varieties of engine. This difference may be briefly expressed as follows;—The high-pressure engine discharges its steam directly into the atmosphere; and consequently the steam on leaving the cylinder must possess an elastic force equal to at least 15 lbs. to the inch. The whole of this force is of course wasted. The low-pressure engine condenses its steam and discharges it as water, and consequently the pressure of the steam on leaving the cylinder may be much less than that of the atmosphere. Thus a large proportion of the steam wasted by the high-pressure engine is utilized. The terms condensing and non-condensing would therefore be far more appropriate than low and high pressure.

The condensing engine is provided with a separate vessel to condense its steam in; this vessel is called the condenser, and is in direct communication with the cylinder. When the piston has completed its stroke, the exhaust-port is placed in communication with the condenser, into which the steam at once rushes. To condense it, a jet of cold water is made to play constantly inside the condenser, and the latter is kept cool by being surrounded with cold water. To effect this a pump, called the cold-water pump, is applied to the cistern in which the condenser is submerged. The cold water thus supplied has a tendency, from its comparative weight, to sink to the bottom, while the warm portion rises to the surface, and flows off through a waste-pipe. To remove the injected water, with the water resulting from the condensation of the steam, from the condenser, another pump is provided, called the air-pump, because it removes at the same time the air which enters in a fixed form with the water, and which is liberated by the heat of the steam. This air, if allowed to remain, would vitiate or destroy altogether the necessary vacuum. It is most necessary for the efficient operation of the engine, that the state of the vacuum in the condenser should be at all times known. For this purpose an indicator is adopted, called the barometer gauge, forming one of the most important appendages of the condensing steam-engine.

This instrument, as its name imports, is a common barometer; but the top of the tube, instead of being closed, is made to communicate with the condenser. The atmospheric pressure acting, as usual in barometers, on the mercury in the cistern, presses a column of mercury up the tube. If the vacuum in the condenser were as perfect as that which is at the top of the barometric tube, then the column of mercury in this instrument would stand at exactly the same height as in the common barometer; but as this is never the case, there is a difference of height which is due to the pressure of uncondensed steam and air, which, notwithstanding the action of the air-pump,

will always remain in greater or less quantity in the condenser. The difference, therefore, between the height of the column of mercury in the barometer gauge communicating with the condenser, and in a true barometer placed near it, will give, in inches of mercury, the pressure which reacts upon the piston against the steam. In well-kept engines, the barometer gauge is seldom more than 2 in. below the true barometer, which would give a pound to the inch for the pressure reacting on the piston. If the barometer gauge stand too low, it indicates the presence either of condensed vapour or of air in the condenser. This may arise either from too little or too much water being thrown in by the condensing jet. If too little be thrown in, the condensation will be imperfect, and uncondensed vapour will lower the gauge; if too much be thrown in, an accumulation of air will be produced faster than the pump can remove it, and the gauge will be similarly affected. The regulation of the jet is thus a matter which should be carefully attended to. The cock which regulates the jet has a handle to which an index is attached playing upon a divided scale; and according to the position of that index the cock is more or less open or closed.

The influence of the condenser upon the work of the engine is exerted in two different ways. In the first place, it acts by the extent of the partial vacuum which it offers to the steam to expand itself in; and, in the second place, by the cold water injected to condense the steam. There are therefore two principal points to be considered in applying a condenser to an engine. First, the extent of the partial vacuum, in other words, the capacity of the condenser and its inlet passages, relatively to the volume of the steam to be exhausted into it; and, second, the quantity of cold water to be injected according to the temperature of this water and the volume or weight of the steam and its temperature.

The following physical law constitutes the general principle according to which the former of these points is determined; namely, that when communication is established between two vessels each containing the same liquid, but at different temperatures, equilibrium of tension between the vapours which they emit takes place in the two vessels according to the tension corresponding to the vapour emitted by the colder liquid. Applying this law to steam-engine condensers, it may be observed that the condenser is almost wholly emptied of air, and contains only water, which emits steam capable of saturating the space, or at its maximum elastic force, whilst the other vessel, that is the cylinder, contains a large quantity of steam at a higher tension, but out of contact with the water which emitted it. This steam, on entering the condenser, expands like a permanent gas, according to the sum of the volumes of the cylinder and the condenser. Such, at least, is what takes place at the moment when the two are put into communication with each other; but as condensation begins at once, the tension is gradually reduced till finally it becomes equal to that of the steam emitted by the water in the condenser. It is true that to obtain this result there must at the same time be added the quantity of cold water necessary to take up the heat evolved by the steam in the act of condensation, otherwise this heat would be taken up by the water previously contained in the condenser, and the temperature of this water being thereby raised, the steam emitted would possess a degree of tension much greater than that which existed at the moment when the two vessels were placed in communication. Consequently, as the effect sought is really obtained only by the addition of cold water, which evidently requires a certain time to operate, it is a matter of practical importance to give the condenser such a capacity that the steam on entering may be greatly expanded even before condensation begins to take effect. These considerations lead us to conclude that the capacity of the condenser should not be less than one-third of the volume generated by the piston during a single stroke, and this conclusion is fully borne out by experiments and the practice of the best makers. Another rule, proposed by a French authority, is to make the volume of the condenser equal to three times that of the steam contained in the cylinder at the moment of being cut off, supposing the steam to have a tension of five atmospheres.

The second point, namely, the quantity of water to be injected, has been fully discussed under Details of Engines, to which article the reader is referred for information on this subject, as well as on that of the air-pump.

The use of the condenser is to reduce the back pressure on the piston, and, as this back pressure is exerted with equal force throughout the stroke, the gain is considerable. In an engine working with a pressure of five atmospheres and without expansion, a saving may be effected of one-fifth of the total work developed; and in an engine working under the same pressure, but with the steam cut off at one-fifth of the stroke, the economy may be as great as one-fourth. Thus it will be seen that in all cases the condenser is a source of economy varying in amount from 20 to 30 per cent., the greater amount being reached with high degrees of expansion. It may be remarked, however, that the difference between the barometric gauge and the barometer does not represent the actual gain of effective work; a portion of this gain is absorbed by the pumps, which are driven by the steam-piston. The first cost is also considerably enhanced, a matter deserving consideration when estimating the advantages of any system. The above results show, however, that when economy of fuel is important, the gain is sufficient to render the adoption of the condenser desirable wherever it can be conveniently applied.

The employment of steam expansively constitutes another notable source of economy, inasmuch as a very considerably larger proportion of work may be obtained from a pound of steam when used in this way. If, for example, we take an expansion of 10 times, the hyperbolic logarithm of 10 being 2·30, we see that the work developed upon the piston during the period of expansion is more than twice that which would have been developed by the same quantity of steam during admission. But it must not be forgotten that this increase of volume in the ratio of 1 to 10, increases in the same proportion the resisting action of the back pressure. This action must therefore be reduced as much as possible by the employment of the condenser. For this reason all engines in which a high degree of expansion is carried out should be condensing engines; the degree to which expansion may be carried out in a steam-cylinder is limited by practical considerations. It will be observed that the piston, which is urged by the force of expansive steam, is acted upon by a continually diminishing power of impulsion. When the pressure of the steam becomes, by expansion,

less than the load which such piston drives through the intervention of machinery, including the friction of the machinery itself, then it is clear that the moving force will cease to be efficacious, and that the piston must come to rest. The expedient by which the expansive principle may be most conveniently extended, is to use, at the beginning of the stroke, steam of high pressure and great density. This brings us to the consideration of another limit in a different direction. It is impossible with steam to have a change of pressure without a corresponding change of temperature, and this change of temperature is productive of a loss of power in an engine-cylinder. This loss may be thus explained. When the exhaust-valve is opened, the steam rushes to the condenser, and the vapour remaining in the cylinder, together with the condensed water adhering to its sides, are almost instantly cooled to the temperature of the condenser, and the surface of the cylinder is thereby cooled in a greater or less degree. The fresh steam, on entering for the next stroke, comes in contact with the previously cooled metal, and a portion of it is condensed without doing any work. This is repeated at every stroke, and in all engines is the source of a considerable loss of heat. This loss is necessarily greater, the greater the difference of temperature between the steam on entering and when being exhausted from the cylinder. When the degree of expansion is increased, the initial pressure must be increased also, and consequently steam of a higher temperature must be employed. The wider range of temperatures thus occasioned causes a greater loss of heat. There are two well-known expedients by which it is sought to lessen this loss, namely, the steam-jacket and superheating. The former acts by preventing, to some extent, the cooling of the cylinder; and the latter, by making the steam dry and a bad conductor, produces the same effect, while at the same time the condensation of the steam is prevented. These expedients diminish the loss of heat from the causes previously mentioned, but they do not prevent it altogether. As expansion is increased, the duty of the fuel is not increased at the rate shown by the theory of expansion. But, on the other hand, the loss of heat increases in a greater ratio than the gain of power due to expansion. Of course, as soon as the increase of loss balances the gain, economy can go no further. This limit is reached at different points, according to the different circumstances under which expansion is carried out.

To use high grades of expansion, and at the same time to avoid the loss of power resulting from the consequent wide range of temperatures, a method has of late years been adopted, and is now rapidly coming into favour, of expanding the steam in two cylinders. We shall return later to the consideration of this double-cylinder or compound engine.

The economy of fuel resulting from the employment of steam expansively is considerable. Speaking generally, this economy may be said to vary from 25 to 50 per cent. The theory of expansion, as well as several other questions relating to the production and employment of steam, has been fully treated of under Boilers, to which article the reader is referred.

A pound of coal consumed in the furnace of a steam-engine will produce a certain mechanical effect, and the amount or quantity of mechanical effect thus produced may be measured in foot-pounds, that is, by the number of pounds raised 1 ft. high. This effect is called the *duty* of the fuel, or more usually, the duty of the engine. The duty of an engine is therefore not the amount of work developed by the fuel in producing evaporation, but only that portion of the total work developed by the steam which is available for the work to which the engine is applied, the difference being absorbed by the engine itself. The duty of engines varies within very wide limits. In some instances in which expansion and condensation are carefully and intelligently carried out, we find a consumption of 1·5 lb. of coal to the horse-power an hour; in others the consumption is as much as 7 or 8 lbs. The duty of a Cornish pumping engine is usually estimated in pounds of water lifted 1 ft. high by the consumption of a bushel of coals. As high a duty as 125 millions of pounds has been reached by this class of engines. Such results must, however, be regarded as altogether exceptional. The more common duty obtained from a well-managed engine used in the mining districts is from 65 to 75 millions. The duty of an engine is not to be confounded with its *power*. The duty, as we have seen, is the work developed by a given weight of coals without reference to time. Thus, whether a bushel of coal raises 70 millions of pounds a foot high in one hour or in twelve hours, the duty of the engine is the same. But the power of the engine is quite different, being estimated by the work it is capable of performing in a given time. Hence, while the duty of the engine is measured by the number of pounds raised 1 ft. high, its power is measured by the number of pounds raised 1 ft. high in one minute. To avoid the large numbers involved in this mode of estimating the power of an engine, it is customary to express it in terms of the higher unit horse-power, which represents the power requisite to raise 33,000 lbs. 1 ft. high in one minute. Thus an engine of 10 horse-power is capable of raising 330,000 lbs. 1 ft. a minute, or about 20 millions of pounds an hour. This is known as *effective* horse-power, to distinguish it from *nominal* horse-power, the latter being a term somewhat capriciously employed by makers to express certain cylinder capacities and dimensions. In determining the dimensions of a boiler for a stationary engine other than the Cornish engine it is customary to assume that for every effective horse-power to be exerted by the engine, 1 cub. ft. of water an hour must be evaporated by the boiler. This allows a very large percentage of waste in the engine, greater probably than ever takes place; but the error is on the safe side, and the rule may be considered as sufficiently accurate in practice. When, therefore, the term horse-power is applied to boilers, it is to be understood as indicating their capability of evaporation at the rate of a cubic foot of water an hour. Thus a boiler of 50 horse-power is one capable of evaporating 50 cub. ft. of water an hour, the furnaces being worked in the ordinary way. The dimensions of the grate and the extent of heating surface necessary to produce this rate of evaporation vary more or less according to the practice of different engineers; but generally it is agreed that 1 sq. ft. of grate surface is requisite for every horse-power in the boiler. Thus it follows that as much fuel is consumed an hour upon a square foot of grate surface as is necessary and sufficient to evaporate a cubic foot of water. The extent of heating surface in the boiler is generally estimated at the rate of 15 sq. ft. to the horse-power. Thus a boiler of 50 horse-power requires a heating surface of 750 sq. ft. In the Cornish boiler, on

account of the slow combustion maintained on the grates, 2 sq. ft. of the latter are allowed to the horse-power, and the extent of heating surface is increased four or five times.

In proportioning the dimensions of the cylinder, it is usual in stationary land engines to make the diameter equal to twice the stroke of the piston. With respect to the absolute dimensions, it is obvious that the magnitude of the cylinder and piston necessary to produce a given power must depend upon the pressure of the steam after it has entered the cylinder and the velocity with which the piston moves, the degree of vacuum on the other side of the piston, and the grade of expansion carried out. When the piston and other reciprocating parts of the machinery change the direction of their motion at the end of each stroke, they will be, for a short interval, before and after the change, accelerated and retarded. This acceleration and retardation is still greater when the steam is used expansively, since, in that case, the impelling power varies in intensity. In practice, however, the irregularity is effaced by the momentum of the fly-wheel, and we may assume for the purposes of calculation that the motion of the piston is uniform. The question which then remains is, what determines the rate of this uniform speed? In other words, what are the conditions that determine whether the piston shall have a velocity of 100 or 200 ft. a minute? The velocity of the piston will depend upon the rate at which the boiler is capable of supplying steam of the requisite tension to the cylinder. Suppose, for example, that the resistance on the piston is equal to a pressure of 20 lbs. to the square inch of its surface. To drive the piston at any given rate, the boiler must be capable of supplying steam at a tension of 20 lbs. in sufficient quantity to fill the space swept through by the piston in a given time. As an illustration, let us assume that the required speed is 200 ft. a minute and that the area of the piston is 78·5 sq. in., corresponding to a diameter of 10 in., which, expressed in square feet = ·545. Then to enable the piston to advance through a space of 200 ft., it must be followed by a column of steam 200 ft. in length and ·545 sq. ft. in section, which equals 109 cub. ft. of steam. But the relative volume of steam at a pressure of 20 lbs. as compared with the water from which it is produced, is that of 1222 to 1. Dividing, therefore, we have $\frac{109}{1222} = ·089$. The boiler must thus be capable of evaporating $·089 \times 60 = 5·34$ cub. ft. of water an hour. That is, allowing a margin for the increased resistance due to the speed, the boiler must be of 6 horse-power.

Total Pressure in lbs. per square inch.	Corresponding Temperature.	Relative Volume, or cubic inches of Steam produced by a cubic inch of Water.	Total Pressure in lbs. per square inch.	Corresponding Temperature.	Relative Volume, or cubic inches of Steam produced by a cubic inch of Water.	Total Pressure in lbs. per square inch.	Corresponding Temperature.	Relative Volume, or cubic inches of Steam produced by a cubic inch of Water.
1	102	20404	39	265·9	652	76	310·5	348
2	126	10646	40	267·4	637	77	311·4	344
3	142	7615	41	268·9	622	78	312·4	340
4	153	5549	42	270·4	608	79	313·2	336
5	162	4499	43	271·9	595	80	314·1	332
6	170·3	3790	44	273·3	582	81	315·0	327
7	176·9	3279	45	274·7	570	82	315·9	324
8	182·8	2892	46	276·1	558	83	316·7	320
9	188·1	2595	47	277·5	547	84	317·6	317
10	192·9	2345	48	278·8	537	85	318·4	314
11	197·4	2144	49	280·1	526	86	319·3	310
12	201·6	1976	50	281·4	516	87	320·1	307
13	205·5	1832	51	282·7	507	88	321·0	304
14	209·2	1709	52	284·0	498	89	321·7	300
15	212·7	1602	53	285·2	489	90	322·5	297
16	215·9	1508	54	286·4	480	91	323·3	294
17	219·1	1424	55	287·6	472	92	324·1	291
18	222·0	1311	56	288·8	464	93	324·9	288
19	224·9	1282	57	290·0	457	94	325·7	285
20	227·6	1222	58	291·1	449	95	326·5	282
21	230·2	1167	59	292·3	442	96	327·2	279
22	232·8	1118	60	293·4	435	97	328·0	277
23	235·2	1072	61	295·5	427	98	328·8	274
24	237·6	1030	62	296·6	422	99	329·5	271
25	239·8	991	63	297·6	416	100	330·2	269
26	242·0	955	64	298·7	409	110	337·3	246
27	244·2	922	65	299·8	404	120	343·9	227
28	246·2	891	66	300·8	398	130	350·1	210
29	248·3	862	67	301·8	389	140	355·9	196
30	250·2	835	68	302·8	387	150	361·4	183
31	252·1	810	69	303·8	381	160	366·6	173
32	254·0	786	70	304·8	376	170	371·6	163
33	255·8	763	71	305·8	371	180	376·3	155
34	257·6	742	72	306·8	367	190	380·8	147
35	259·3	722	73	307·7	362	200	385·2	140
36	261·0	703	74	308·7	357	250	403·5	114
37	262·7	685	75	309·6	353	300	421·0	100
38	264·3	668						

By means of the foregoing Table many practical problems similar to the preceding and of great utility, may be solved with the aid of common arithmetic alone. The temperatures corresponding to the pressures from 1 to 5 lbs. are taken from Rankine; the whole of the remaining quantities we have carefully calculated. They will be found to vary somewhat from those of similar tables that have been published; but it is believed that they are more accurate, the formulæ by which they were calculated being fully confirmed by the elaborate calculations of Zeuner and Rankine respecting the relation existing between the latent heat of evaporation, the temperature, and the specific volume of steam.

The following examples illustrate the use of the preceding Table;—

1. A boiler is capable of evaporating 20 cub. ft. of water an hour. The pressure of steam in the cylinder being 20 lbs., what must be the diameter of the cylinder to give a piston speed of 200 ft. a minute?

By referring to the Table, we find the relative volume for 20 lbs. to be 1222. Hence $\frac{1222 \times 20}{60} = 407{\cdot}3$ is the number of cubic feet of steam that will pass through the cylinder a minute, and $\frac{407{\cdot}3 \times 144}{200} = 293{\cdot}2$ sq. in. = the area of the piston. A table of areas will at once give the diameter.

2. A piston 20 in. in diameter is required to move with a velocity of 200 ft. a minute against a gross resistance of 10,000 lbs.; it is required to find the requisite boiler power.

A table of areas gives 314·1 sq. in. for a diameter of 20 in. As the resistance is 10,000 lbs., the pressure to the square inch will be $\frac{10000}{314{\cdot}1} = 31{\cdot}8$ lbs. The next greater pressure to this in the Table is 32, the relative volume corresponding to which is 786. The area of the piston in square feet being 2·181, the power of the boiler $= \frac{2{\cdot}181 \times 200 \times 60}{786} = 31{\cdot}77$, say 32 horse-power.

3. Given a piston 30 in. in diameter, supplied by a boiler of 50 horse-power, it is required to find the pressure to the square inch that can be given to the piston when the latter has a velocity of 200 ft. a minute.

The area of the piston is 706·8 sq. in. = 4·908 sq. ft. Hence $\frac{4{\cdot}908 \times 200 \times 60}{50} = 1177{\cdot}9$, the number of cubic inches of steam that would be produced by a cubic inch of water. The nearest number to this in the Table is 1167, and the pressure corresponding to this number is 21 lbs. We may therefore assume that the required pressure is 20¾ lbs.

4. Given a piston 40 in. in diameter, and a boiler of 50 horse-power; it is required to find at what velocity the piston may be driven against a resistance of 20 lbs. to the square inch. For a pressure of 20 lbs. the Table gives 1222 as the relative volume. Hence 1222 × 50 = 61100 is the number of the cubic feet of steam that passes through the cylinder an hour. The area of the piston in square feet being 8·72, we have $\frac{61100}{8{\cdot}72 \times 60} = 116{\cdot}8$, say 116 ft. a minute.

The compound system of engine, to which we have already alluded, consists essentially in passing the steam through two cylinders of unequal dimensions, the second and larger serving as a kind of receiver to the first, the steam from which it uses a second time by expansion. It was to realize more effectually the principle of expansion that the system was first introduced, and the success which has been attained is such as to render it one of the greatest improvements of recent years. And it is not difficult to discover the cause of this success. We have already described the ill effects of a wide range of temperatures, or, which is the same thing, a wide range of pressures in one cylinder. By carrying out the expansion in two cylinders, these ill effects are diminished in a considerable degree. Also when a high grade of expansion is carried out in one cylinder, the variation of pressure necessitates relatively larger dimensions in the parts through which the force is transmitted, and, moreover, produces an irregular velocity which can be modified only by means of a heavy fly-wheel. By using two cylinders, the pistons of which work together with different pressures, the inequality of the strains is certainly not altogether avoided, but it is greatly diminished. Thus the objections to very high grades of expansion are by this means, to a considerable extent, removed.

The invention of the compound engine is due to Hornblower, who first made the system known in the year 1781. It was not, however, carried into effect till more than twenty years later, by Woolf, under whose name it was for a long time known. Recent years have witnessed considerable improvements in this class of engine, chief among which must be reckoned the construction of engines with the two cylinders connected to cranks at or near right angles to each other, and the placing of a receiver between the two cylinders.

6936.

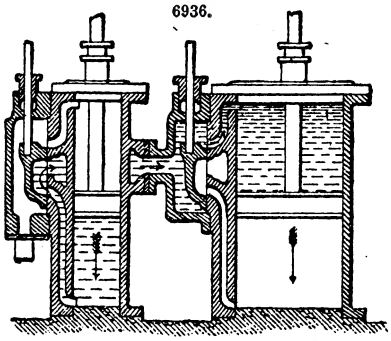

In the accompanying diagram, Fig. 6936, which we have introduced for the purpose of explaining the action of the compound engine, we have supposed, in order to make the course of the steam apparent to the eye, that the exhaust-passage from the small cylinder passes round it, and directly into the valve-box of the large cylinder. The piston of the small cylinder is driven by the steam from the boiler in the same way as in a single-cylinder engine, and either with or without expansion. When the stroke of the piston in either

direction is completed, the steam, instead of escaping into the atmosphere or into the condenser, is conducted into the valve-box of the large cylinder, whence it exerts its pressure simultaneously upon the two pistons. As these pistons are connected to the same crank-shaft, they complete their stroke together, so that all the steam from the small cylinder passes into the large one. Consequently, supposing for the sake of simplicity that the steam is not expanded in the small cylinder, it is expanded in the ratio of the volumes generated by the two pistons, and this ratio marks the degree of expansion carried out. At the next stroke the same effects are produced in the contrary direction, and the former cylinder full of steam is exhausted into a condenser in the usual way.

In the figure both pistons are supposed to be descending. The steam from the boiler enters above the small piston, whilst that beneath it, and by which it was raised at the preceding stroke, passes out and enters above the large piston, the lower portion of the large cylinder being then in communication with the condenser, in which the steam is exhausted that had entered from above the small piston. In most beam-engines the two pistons move in the same direction. In such a case, the steam-passages cross, that is, the steam passes from beneath the small piston to enter above the large one, and the reverse. But when the motion of the pistons is in contrary directions, the steam-passages are direct, that is, on issuing from the small cylinder it enters directly into the corresponding end of the large cylinder. Such details, however, in no way affect the general principle.

The pistons may be either equal or unequal in stroke or in area, but an essential point is that they must generate different volumes. It is an interesting fact that the work developed by a given volume of steam is exactly the same whether expanded in one cylinder or in two. This fact is clearly proved by the following simple means, proposed by Poncelet. It has already been shown that the absolute quantity of work generated by a given volume of steam by expansion is measured by the increase of volume which it has acquired and by the initial pressure. This being true for the total increase of volume and the total quantity of work, is not less true for each partial increase of volume which develops a partial quantity of work, the measure of which is also this increase of volume and the mean pressure at the moment when it takes place. Suppose, then, two cylinders, A and B, Fig. 6937, in which the two pistons advance simultaneously by a certain quantity. If we take an instant when the steam is confined in the spaces C and D, and if in passing from C to D the pistons advance by infinitely small quantities h and h' respectively, the steam develops in the same time upon the large piston a certain quantity of work, which quantity must be diminished by that generated as resistance to find the expression of the work really effective. The value of the work developed in the two cases is evidently the product of the area of the piston by the space through which it has moved and by the pressure of the steam, which at any given instant of time is the same in both cylinders, since they are in communication with each other. Therefore, representing the area of the large piston by S, the extent of its forward motion by h', the area of the small piston by s, the extent of its forward motion by h, and the common and mean pressure on the unit of surface during this infinitesimally small extent of forward motion of the two pistons by P, the quantity of work developed during this forward motion of the pistons is,

6937.

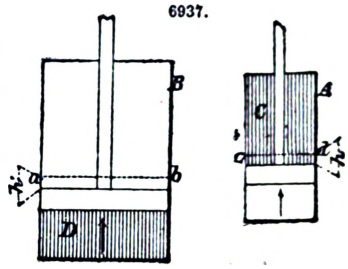

$$(P \times S \times h') - (P \times s \times h) = P\,(S\,h' - s\,h).$$

But the factor $S\,h' = s\,h$ is the exact expression of the increase of volume of the steam at the moment considered; therefore each partial quantity of work developed by the steam is proportional to its partial increase of volume; which it was required to prove.

Thus, whether we make use of two cylinders or one, the quantity of work will be the same for a given degree of expansion, the initial pressure being, of course, the same in both cases. And this is evidently independent of the stroke or the diameters of the pistons. We may therefore, without going into further particulars, state that in determining the dimensions of the cylinders of a Woolf engine the volume generated by the large piston is equal to that of the single cylinder for the same power, the same degree of expansion, and the same initial pressure, and that the volume generated by the small piston is equal to that of the steam before expansion, supposing expansion to be carried out wholly in the large cylinder. In other words, the ratio of the volumes generated by the two pistons is simply the degree of expansion carried out, when expansion is not begun in the small cylinder. In the contrary case, the ratio of these two volumes becomes the quotient of the degree of total expansion divided by the expansion effected in the small cylinder; but the volume of the large cylinder is invariable, whether expansion be carried out in it alone or in both, the small cylinder only being affected by the latter condition.

With respect to the back pressure in a compound engine, other things being equal, this pressure produces a resisting force measured by the volume which is generated by the piston upon which it acts. But as the large piston of a double-cylinder engine generates precisely the same total volume as that of a single-cylinder engine working with the same degree of expansion, the back pressure produces the same amount of resistance in both cases. Consequently, compound engines are calculated in precisely the same manner as ordinary single-cylinder engines worked with expansion.

A very ready method of making, by means of a Table, the requisite calculations relating to the expansive action of steam in either single or double cylinders has been proposed by David Thomson, in a paper recently read before the Association of Foremen Engineers. As this Table will be found of very great use to practical men, we give it, with a few of the author's remarks thereon, which will elucidate some of the questions respecting compound engines in which opinions are divided.

STEAM WORKED EXPANSIVELY.

Table of Mean and Initial Pressures in the Cylinder. On the supposition that the pressures are inversely as the volumes.

Points of Cut-off in fractions of the Stroke, reckoned from the beginning.	Degrees of Expansion, or number of times the Steam is expanded.	Hyperbolic Logarithms of the Degrees of Expansion.	Mean Pressures during the Stroke, the initial pressures being taken as 1.	Initial Pressures in Cylinder, the mean pressures being taken as 1.
$\frac{1}{8}$	$1\frac{1}{8}$	·2876	·965	1·036
$\frac{1}{7}$	$1\frac{1}{7}$	·3506	·949	1·054
$\frac{1}{6}$	$1\frac{1}{6}$	·4055	·937	1·067
$\frac{1}{5}$	$1\frac{1}{5}$	·5108	·904	1·106
$\frac{1}{4}$	$1\frac{1}{4}$	·6931	·846	1·182
$\frac{1}{3}$	$1\frac{1}{3}$	·9163	·766	1·305
$\frac{4}{10}$	$1\frac{2}{3}$	1·0986	·669	1·495
$\frac{1}{3}$	2	1·2040	·661	1·513
$\frac{3}{10}$	$2\frac{1}{3}$	1·3863	·596	1·678
$\frac{1}{4}$	3	1·6094	·522	1·916
$\frac{2}{10}$	4	1·7918	·465	2·105
$\frac{1}{5}$	5	1·9459	·421	2·375
$\frac{1}{6}$	6	2·0794	·385	2·598
$\frac{1}{7}$	7	2·1972	·355	2·817
$\frac{1}{8}$	8	2·3025	·330	3·030
$\frac{1}{9}$	9	2·3979	·309	3·236
$\frac{1}{10}$	10	2·4849	·290	3·448
$\frac{1}{11}$	11	2·5649	·274	3·649
$\frac{1}{12}$	12	2·6391	·260	3·846
$\frac{1}{13}$	13	2·7081	·247	4·048
$\frac{1}{14}$	14	2·7726	·236	4·237
$\frac{1}{15}$	15	2·8332	·226	4·425
$\frac{1}{16}$	16	2·8904	·216	4·629
$\frac{1}{17}$	17	2·9444	·208	4·807
$\frac{1}{18}$	18	2·9957	·200	5·000
$\frac{1}{19}$	19	3·0445	·192	5·208
$\frac{1}{20}$	20	3·0910	·186	5·376
$\frac{1}{21}$	21	3·1355	·180	5·555
$\frac{1}{22}$	22	3·1781	·174	5·747
$\frac{1}{23}$	23	3·2189	·169	5·917
$\frac{1}{24}$	24			
$\frac{1}{25}$	25			

"I now proceed to show how the calculations connected with compound and other expansive engines may be made with ease and rapidity by means of the Table. These calculations are often made by means of diagrams of expansion, or expansion curves, drawn on the same principles on which this Table is calculated, but I have always found such calculations to be made more rapidly and accurately by means of a table than a diagram.

"When steam is expanded in the cylinder of a steam-engine its pressure at any part of the stroke is very nearly inversely proportional to the volume it occupies. This is not *exactly* the case, but very nearly so, and in almost all indicator diagrams it is found that the pressure is slightly greater than it ought to be by this rule. If, therefore, the size of a cylinder is calculated on the supposition that the pressure of the expanding steam is inversely as the volume, a slight error may be expected on what engineers often call the 'right side'—that is, the size will be slightly above what is strictly required.

"The Table is calculated on the supposition that this rule is accurate. To give an example of its application, let it be required to find the area of a cylinder to yield 100 I H P., with a maximum pressure of steam of 60 lbs. above the atmosphere, an expansion of six times, back pressure 2 lbs. per square inch, and a piston speed of 300 ft. per minute.

"Here the average pressure required on the piston to give this power $= \frac{33000 \times 100}{300} = 11000$ lbs.

Next, maximum pressure of steam above the atmosphere = 60 lbs.
Add pressure of atmosphere .. .. 15 „
Maximum total pressure .. .. 75 lbs.

"Referring to the Table, in the line for six times expansion, we find that in these circumstances the average pressure over the whole stroke .. .. = 75 × ·465 = 34·875 lbs.
Deduct back pressure .. .. 2·000 „
And we have the mean effective pressure over the whole stroke .. = 32·875 lbs.

"From which it follows that the area of the piston $= \frac{11000}{32 \cdot 875} = 335$ sq. in., and a table of areas of circles gives the diameter of the cylinder = $20\frac{5}{8}$ in.

"When a high degree of expansion is effected in one cylinder, the maximum strain on the crank-pin is much larger than the average working pressure over the length of the stroke, as is very

clearly shown by a reference to the Table. To diminish this excessive strain is the object sought in employing two cylinders to work conjointly, the one receiving the steam from the other, and thus forming what we call a compound engine.

"If, in the example we have taken, the six times expansion had been carried out in two cylinders, the mechanical effect developed would have been exactly the same; and so also would have been the final pressure. It is readily seen that if the final pressure is the same in both cases, and the quantity of steam used is also the same, the capacity of the large cylinder of the compound engine must be the same as that of the single-cylinder engine of the same power, and working with the same degree of total expansion. All that is necessary, therefore, in calculating the size of the large cylinder for a compound engine is to calculate, in the way we have already done, the size of a single cylinder to develop the required power with the given initial pressure and the given amount of expansion. This will be the size required for the large cylinder of a compound engine to develop the given power; and the only use of adding a small cylinder to it is to moderate the maximum strain on the crank-pin, and give a more equable development of power over the whole stroke of the piston. This being the object aimed at, it is best to make the size of the small cylinder such that the maximum strain on the crank-pin shall be the smallest possible under the given conditions. Dr. Pole, in a paper on Compound Engines, shows, for the Woolf form of engine, that this is effected by making $\frac{\text{Area of large cylinder}}{\sqrt{\text{Degree of expansion}}} = \text{area of small cylinder.}$

"The rule applied to the example we have already taken would give

$$\text{Area of small cylinder} = \frac{335}{\sqrt{6}} = 137 \text{ sq. in., and}$$

$$\text{Diameter} = 13\tfrac{1}{4} \text{ in.}$$

"The area of the small cylinder being thus calculated, it is to be understood that to get the best result half the expansion is to be effected in the small cylinder, and the remainder during expansion into the large cylinder. Thus, in the present instance, the steam is to be expanded $2{\cdot}449$ times in each cylinder, and $2{\cdot}449 \times 2{\cdot}449 = 6$; making six times expansion in all.

"For the *marine* compound engine the area of the small cylinder is not so definitively fixed; because the two pistons, acting on different cranks, the object generally is to make the maximum strain of either taken singly a minimum. And besides, the maximum strains of either piston can be considerably varied by altering the point of cut-off in the large cylinder. Nevertheless Dr. Pole's rule for Woolf engines will be found generally to give good results for the other form of engine also, and such as fairly correspond with the best practice. The assertion that the mechanical power developed is the same whether the expansion takes place in one or two cylinders, requires this qualification, that when two cylinders are used the arrangements must be such that none of the expansion takes place uselessly, by the steam rushing into the passages and so causing a sudden drop of the pressure, without doing any work on the piston. In the Woolf form of compound engine this condition has not hitherto been absolutely complied with, and in some engines of this type it is very far from being so. A considerable loss of effect is the consequence.

"The amount of this will be seen if we take an example, thus—

"Let the capacity of the small cylinder be $= 4$; capacity of the large one $= 16$; and the capacity of the steam-passage between them $= 1$, or the fourth part of the small cylinder. Suppose, further, that the maximum *total* pressure of the steam in the small cylinder $= 75$ lbs., and that it is cut off at $\frac{1}{3}$ stroke. With these data the expansion should be, if we disregard the effect of the intermediate passage, three times in the small cylinder, and four times more in expanding into the large one; or $3 \times 4 = 12$ times. But the actual operation would be this—

"First the steam would be expanded three times in the small cylinder, thus reducing the pressure to $\frac{75}{3} = 25$ lbs. On the exhaust-valve being opened the steam would rush out into the intermediate passage, and thus occupy a space $= 4 + 1 = 5$, by which its pressure would be reduced to $25 \times \frac{4}{5} = 20$ lbs.; and this part of the expansion being uselessly expended in friction and producing no motion in the pistons, would be productive of no useful effect. It is assumed here and in what follows that the passage is entirely empty. This should not be the case, for it should be filled with steam of a pressure equal to the *final* working pressure in the large cylinder. In practice, however, the drop of pressure is generally quite as great as it ought to be, on the supposition of the passage being empty, and if the theoretical effect of the supposed small steam pressure existing in the passage were taken account of in these calculations, it would only complicate them, without producing any difference of practical consequence in the results arrived at.

"The steam which now occupies a space $= 5$ will, at the end of the large cylinder stroke, occupy a space $= 16 + 1 = 17$; thus having been expanded $\frac{17}{5} = 3\frac{2}{5}$ times during its passage into the large cylinder. The total effective expansion in both cylinders is therefore $= 3 \times 3\frac{2}{5} = 10\frac{1}{5}$ times, instead of 12 times, which it would have been but for the effect of the intermediate passage. The loss of efficiency thus caused is measured by the difference between

$$1 + \text{Hyperbolic log. } 12, \text{ and}$$
$$1 + \text{Hyperbolic log. } 10\tfrac{1}{5};$$

that is, it amounts to $1 - \frac{3{\cdot}322}{3{\cdot}485} = 1 - {\cdot}953 = {\cdot}047$, or nearly 5 per cent., of the whole efficiency of the steam when expanded twelve times in one cylinder. In many Woolf engines the loss of efficiency from this cause is greater than this; but it need not be so if the engines are well constructed; and this defect may be diminished or entirely removed if Woolf engines were made

with intermediate receivers, and the steam cut off at the proper point of the stroke in the large cylinder, as is done in the modern marine engines.

"Some of the best of these are worked in this way—that is to say, so as to have no, or almost no drop of pressure, at the end of the small cylinder diagram. But even where this is not the case, I propose to show that a comparatively large fall of pressure at this point may take place in a compound engine with an intermediate receiver without producing so great a loss of efficiency as a much smaller drop in the old form of Woolf engine.

"This may be done without intricate mathematical formulæ by the aid of the Table and by taking a particular example, the reasoning applied to which will be seen at each step to be equally applicable to *any* example that can occur in practice.

"Further to simplify the calculations, without affecting the deductions to be drawn from them, I assume the area of the small cylinder to be 1 sq. in., the area of the large cylinder = 4 sq. in., and the stroke of both = 1 ft.

"Let the capacities of the cylinders be reckoned in units of 1 in. square by 1 ft. long, and then we shall have

Capacity of small cylinder = 1
„ of large ditto = 4

"Let the steam be cut off at ¼ stroke in small cylinder, and then

Total expansion = 16 times.

"Further suppose the maximum total pressure of the steam in the small cylinder = 160 lbs. Then we shall have

$$\text{Pressure in small cylinder at end of stroke} = \frac{160}{4} = 40 \text{ lbs.}$$

$$\text{„ in large cylinder at end of stroke} = \frac{160}{16} = 10 \text{ lbs.}$$

"By means of a cut-off valve in the large cylinder, the pressure maintained in the reservoir may be regulated at pleasure; and for the sake of simplicity let it be assumed that the reservoir is sufficiently large to make the pressure in it practically uniform.

"Now let us calculate the indicated power developed in three different cases, in all of which the quantity of steam used per stroke is the same, *viz.*:—

"1st. If the steam is expanded 16 times in the large cylinder only, working as a single-cylinder engine having the steam cut off at $\frac{1}{16}$ stroke.

"2nd. If the total expansion of the steam is effected in two cylinders as I have described, and with the pressure in the reservoir maintained at 40 lbs.

"3rd. Ditto, ditto, but with the pressure in the reservoir maintained at 20 lbs.

"1*st Case.*—Power developed per half stroke = 160 × ·234 × 4 = 151 ft. lbs.

"2*nd Case.*—In this case it will be observed that there is no drop of pressure at the end of the small cylinder diagram, because the final steam pressure in the small cylinder is equal to that in the reservoir; and the power developed in each cylinder is—

Power developed in small cylinder per half stroke = 160 × ·596 − 40 = 55·56 ft. lbs.
„ „ in large cylinder „ „ = 40 × ·596 × 4 = 95·36 „ „

Total power developed in both cylinders per half stroke = 150·72 ft. lbs.

"This it will be seen is identical with the power developed in a single cylinder in accordance with the general principles I have already explained, as applying where, as in this case, there is no useless expansion without doing work on the piston.

"3*rd Case.*—In this case there is a large fall of pressure in the small cylinder diagram at the end of the stroke from 40 to 50 lbs., and the calculation of the power developed is—

Power developed in small cylinder per half stroke = 160 × ·596 − 20 = 75·36 ft. lbs.
„ „ in large cylinder „ „ = 20 × ·846 × 4 = 67·68 „ „

Total power developed in both cylinders per half stroke = 143·04 ft. lbs.

"This last result is, as anticipated, smaller than the two former ones, but it is not nearly so much smaller as the large drop of one-half in the pressure at the end of the small cylinder diagram might have led one to expect. It is only a diminution of 5 per cent. in the efficiency of the steam; whereas we saw before that a drop of only one-fifth of the pressure at the end of the stroke in the small cylinder of a Woolf engine produced a loss of efficiency of nearly the same amount.

"Let us look at the matter from another point of view. In case 3 the steam is expanded *effectively* four times in the small cylinder, after which it is further expanded twice by an instantaneous drop of the pressure on exhausting it into the receiver. It expands, in fact, into double its volume, and the pressure falls from 40 to 20 lbs., and in doing so it exerts no power on the piston, which has been sensibly stationary during the expansion. After this the steam is admitted to the large cylinder at 20 lbs. pressure, is cut off at ½ stroke, and then expands during the remainder of the stroke, down to its final pressure of 10 lbs. at the end of the stroke. This last expansion has done its proper work on the large piston, and this, with the previous *effective* expansion in the small cylinder, makes a total effective of 4 × 2 = 8 times only; as compared with the total expansion of 16 times, *viz.* from pressure of 160 lbs. down to 10 lbs. It would seem at first sight that the efficiency of the steam would in this case be the same as if it had been expanded eight times in one cylinder. To expand the *same quantity* of steam in one cylinder, the capacity of the cylinder must be = 2, and the steam must be cut off at ⅛ of the stroke. Then power developed = 160 × ·385 = 123·2 ft. lbs.

"This result is very considerably less than we obtained before in the calculation of the 3rd case, where it was shown that power = 143 ft. lbs. was developed. Yet in both cases the quantity of steam is the same, and apparently the amount of expansion exerted *usefully* on the pistons is the same in both; and the question arises, how can the steam, when expanded in the two cylinders, give a greater useful effect than when expanded in one?

6938.

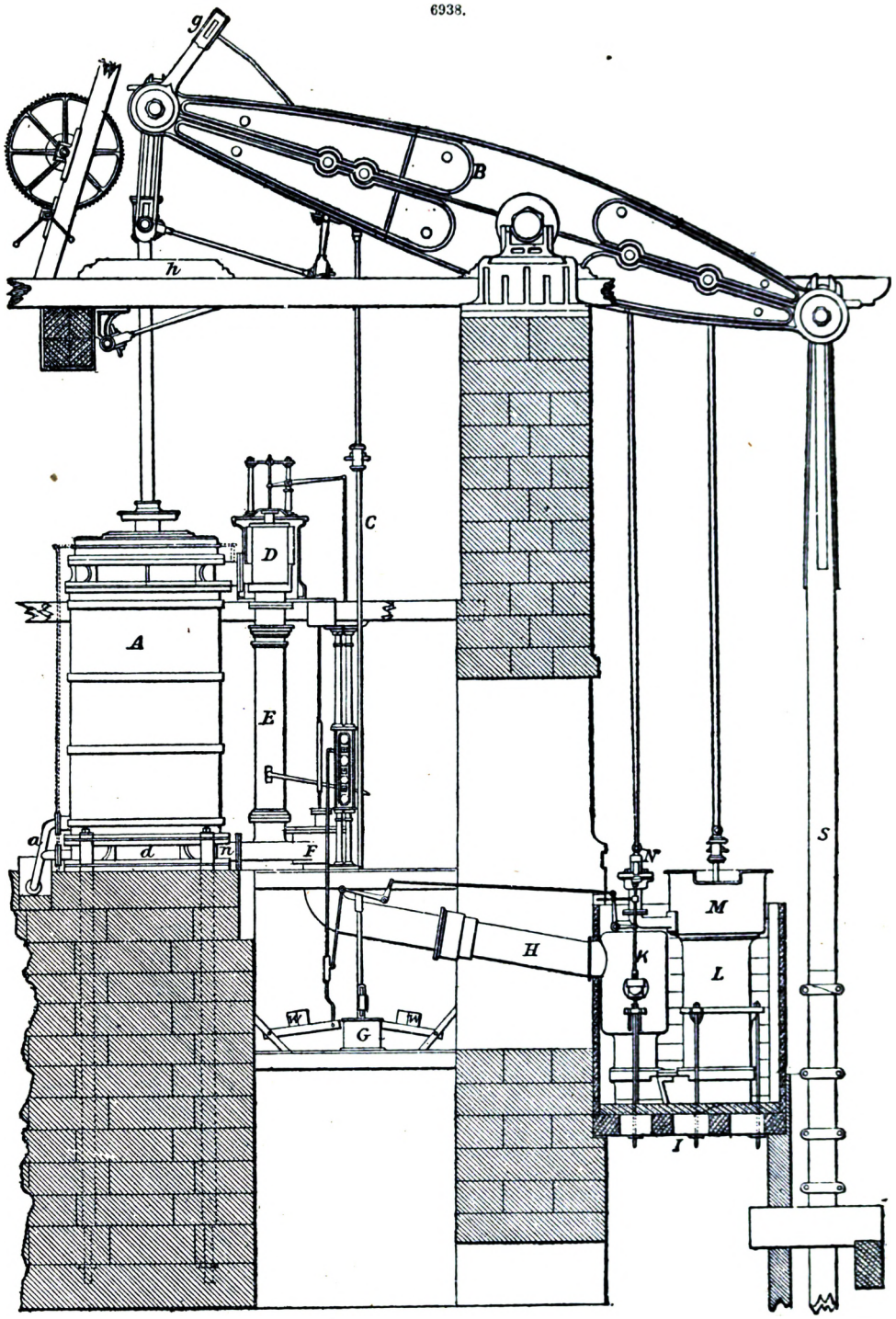

"The answer to this question is to be found in the consideration of what is done by the steam when it is exhausted from the small cylinder into the receiver. Previous to the opening of the exhaust-valve the steam occupies a bulk = 1 in the small cylinder at a pressure of 40 lbs.; and when the valve is opened, it at once expands till the pressure is reduced to that of the reservoir, 20 lbs.; after

this there will be left in the small cylinder the same bulk (1) of steam as before, but only one-half the *quantity*; inasmuch as the pressure is now 20 lbs. instead of 40 lbs., as it was before the exhaust took place. One-half the steam, therefore, has been discharged from the cylinder, and now occupies a bulk of 1 in the reservoir, at a pressure of 20 lbs. In gaining this position it has necessarily

6939.

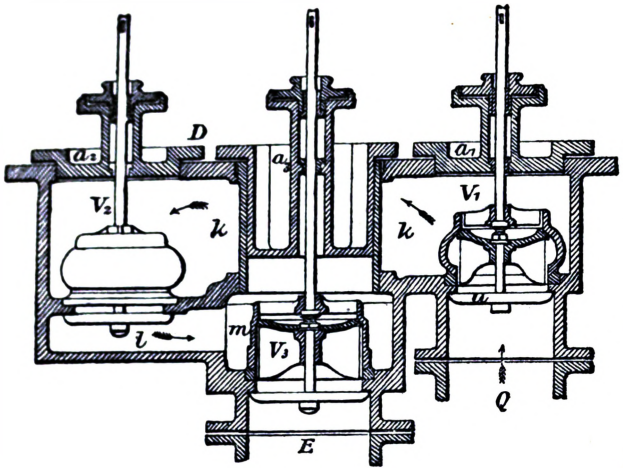

6940.

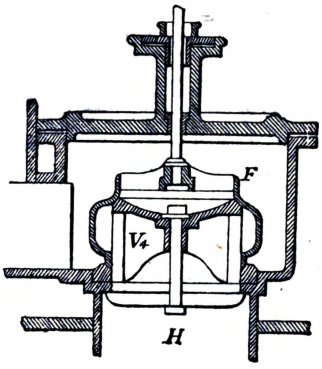

6941.

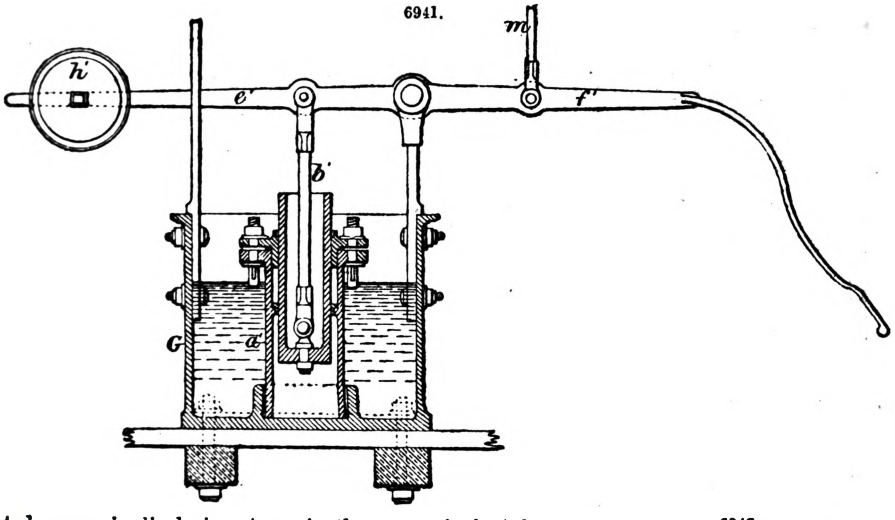

exerted power in displacing steam in the reservoir, just in the same way as steam issuing from a boiler exerts power in displacing the atmosphere. The power so expended is recoverable when the reservoir supplies steam to the large cylinder, and its amount in this case = 20 × 1 = 20 ft. lbs. Now if this 20 ft. lbs. is added to 123·2 developed in the single cylinder with eight times expansion, the sum is 123·2 + 20 = 143·2 ft. lbs., which is the identical result we arrived at in our calculation of case 3, by an independent method; and the accuracy of the explanation I have given as to how part of the apparently lost power is recovered, is proved by the correctness of the numerical results founded upon it. The conclusion to be drawn from this is, that the apparent loss of power by a sudden drop of pressure at the end of the small cylinder diagram in a compound engine with a reservoir is to a considerable extent not a *real* loss, as it would be almost entirely in a Woolf engine of the usual construction.

6942.

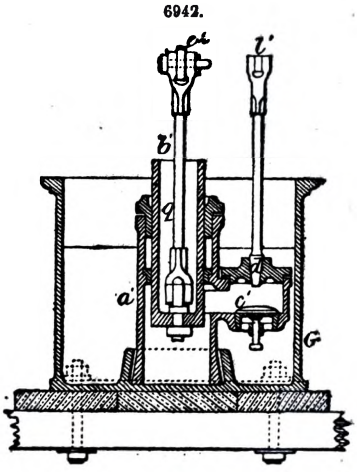

"Not only is this the case, but a glance at the results we obtained in calculating the power developed in each cylinder in cases 2 and 3 shows that when the engine is working with this great drop in the pressure, and thus incurring a loss of 5 per cent. of the gross indicated power, the division of work between the two cylinders is much more equal than when working without it.

"A slight consideration would also show that the maximum strains on the cranks are much less when thus working; and therefore, owing to the diminished friction and more moderate strains,

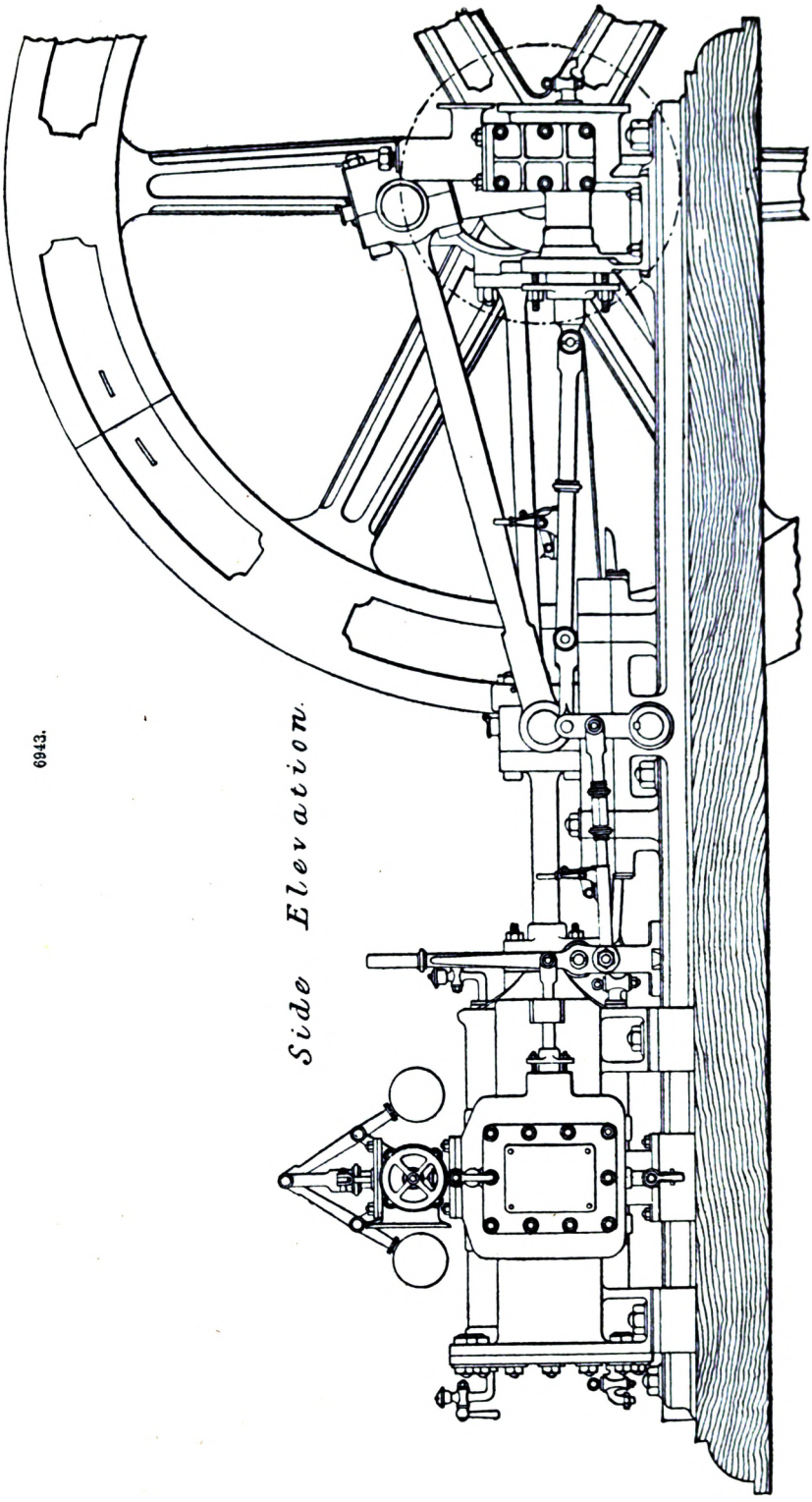

6943.

Side Elevation.

it may very well be that the engine would work better and do more work with this large drop than without it."

There are three types of stationary engines, distinguished in one case by the medium of transmission, and in the other cases by the position of the cylinders. The first and oldest is that

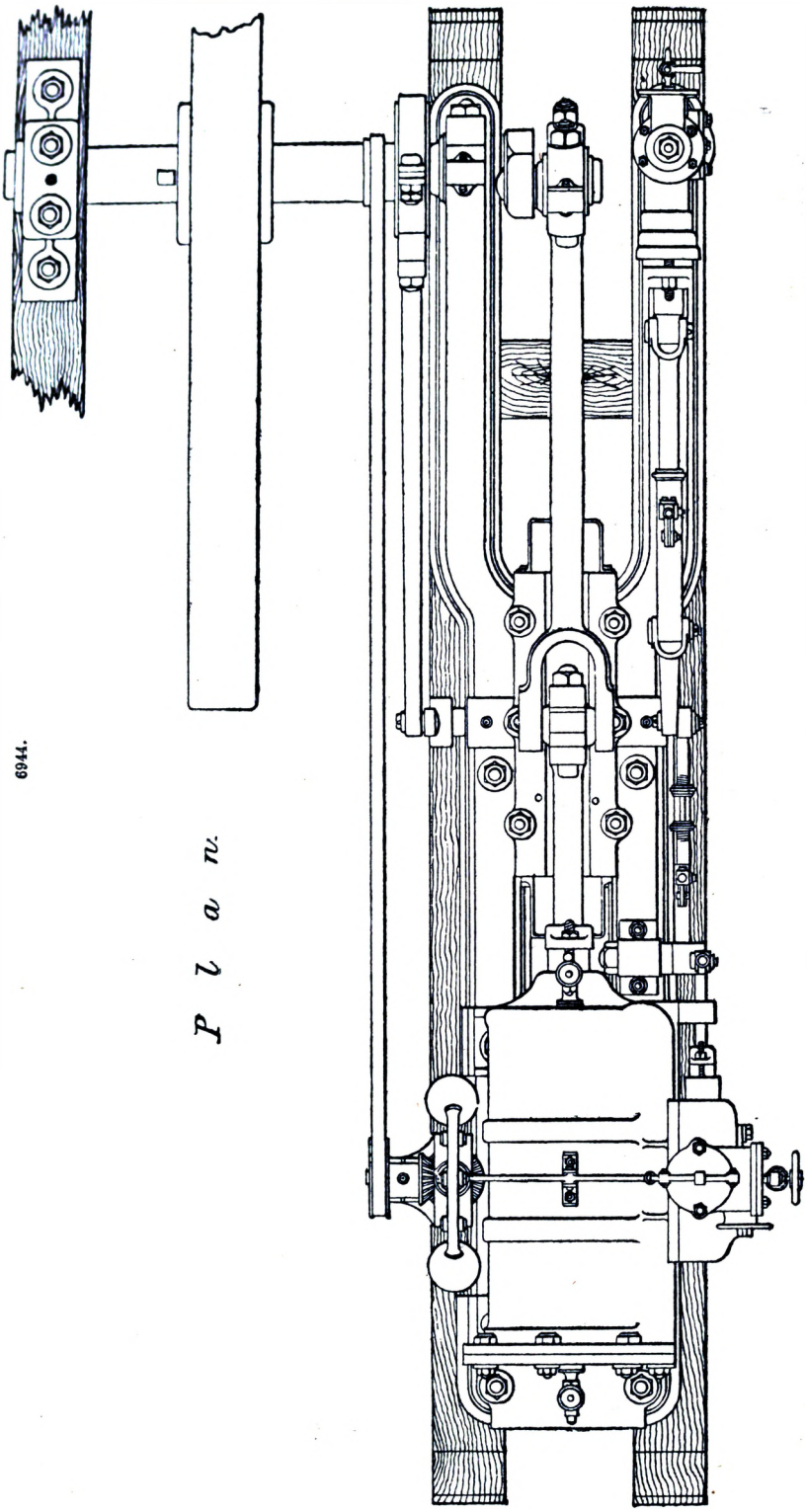

6944.

Plan.

known as the beam-engine, so called because the motion of the piston-rod is communicated to a heavy oscillating piece called the beam, which transmits the motion to the machinery to be driven.

This type, except for pumping purposes, for which the motion of the beam is very suitable, is gradually going out of favour. It is difficult and costly to construct; it demands more care and precaution in certain parts of its construction, and more time and attention for its erection. It requires for a given power more solid foundations than the other types, and it is not favourable to economy

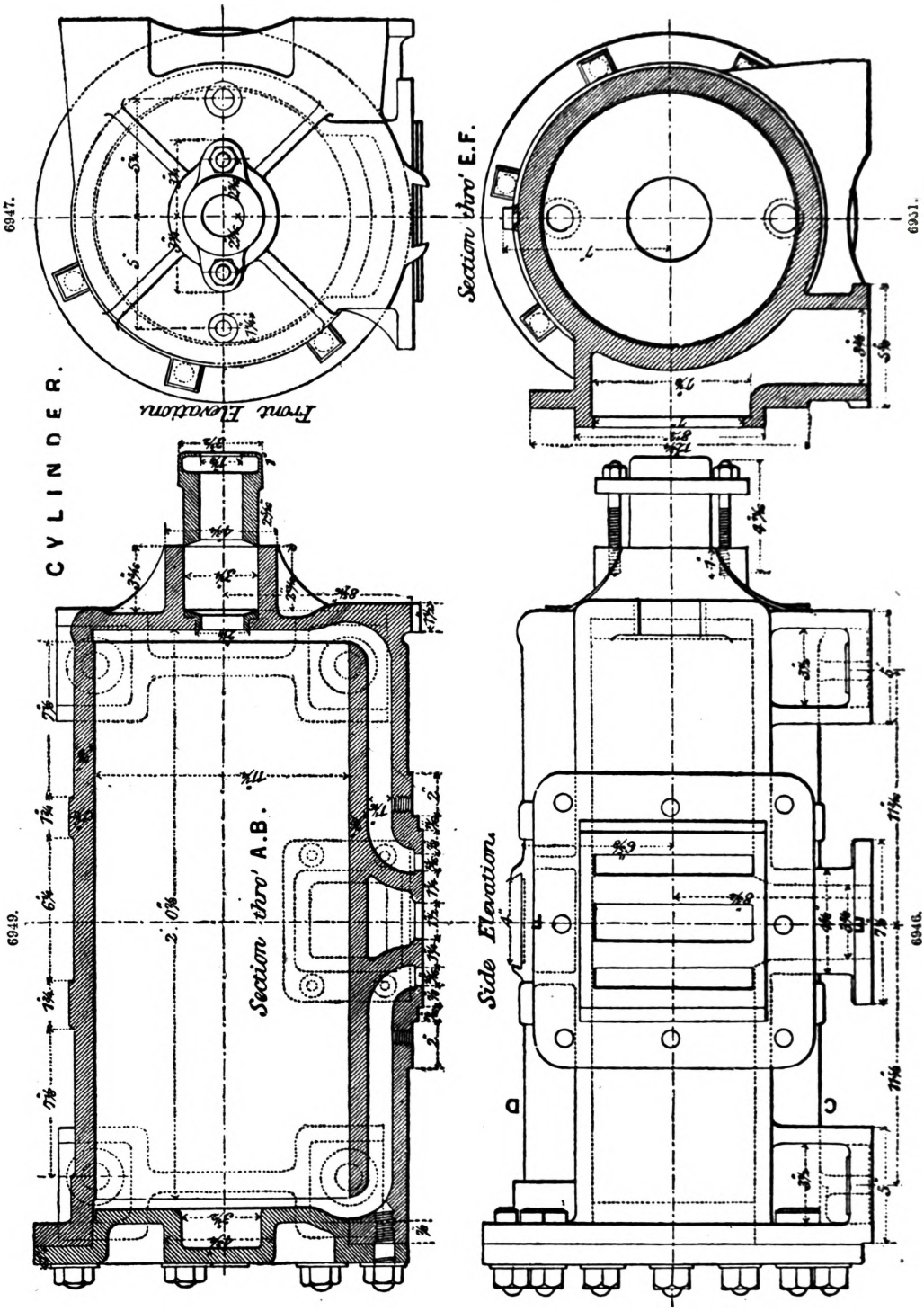

of fuel. Moreover, it allows but little latitude in its application, and is utterly incompatible with high piston velocities. On the other hand, its motion is extremely regular and majestic, and when of great power, it presents an imposing appearance.

The chief condition to be fulfilled in designing an engine on this system, is to give the beam

such length that the angle which it describes may be as small as possible, so as to diminish the influence of the versed sine of the arcs in decomposing the motion. Theoretically this length should be infinite; in practice it is usually made equal to three times the stroke of the piston. In some American engines the beam is made shorter than this, but in our opinion a still greater proportion than 3 to 1 is desirable. With this proportion, the angle described by the beam is about 38° 20', and the versed sine of the arcs is 0·075 of the stroke.

6945.

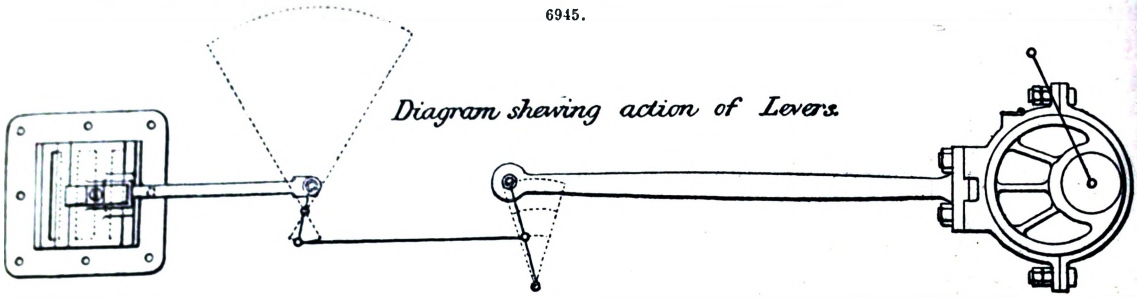

6948.

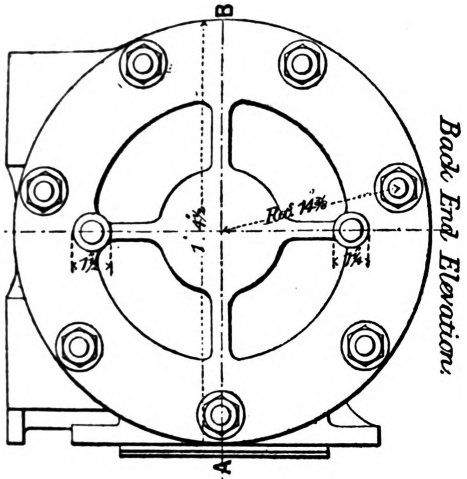

6952.

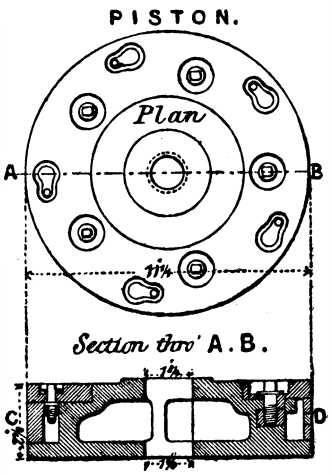

6953.

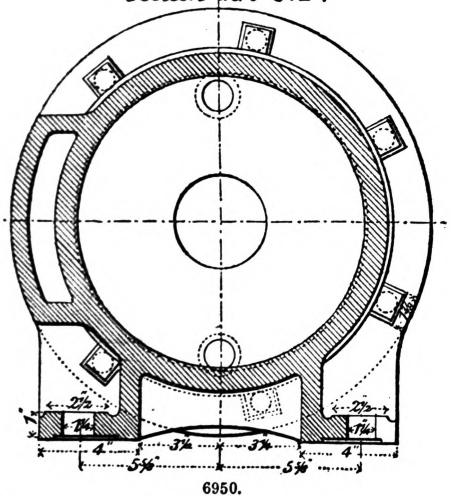

6950.

6954.

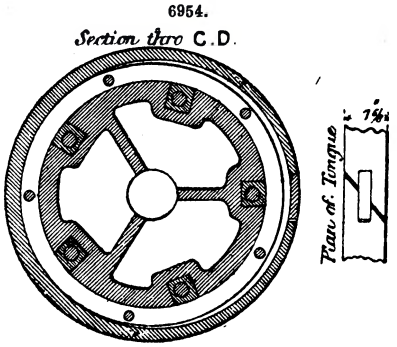

In the horizontal engine, as its name implies, the cylinder is placed horizontally. This system may be said to have produced a revolution in the use of steam-engines. Its numerous advantages have rendered its adoption almost general, in spite of the strong prejudices arrayed against it on its first introduction. Engines constructed on this system are remarkable for their simplicity, their solidity, and their economy. Occupying but little space, they may be erected in positions totally unsuitable for a beam-engine, and may be easily examined or repaired when out of order. As the

breadth of their base is great relatively to their height, very high speeds may be attained without fear of the vibration which would be caused in other systems. The little foundation required is also a source of economy that in some cases may be of considerable importance. This class of engine is rapidly taking the place of the beam-engines, and it may be regarded as the type of the present day, and the most advanced stage of steam-engine construction.

The third type of engine is the vertical, in which the cylinder and the organs of motion and transmission occupy the same position as in the beam-engine. In this type, however, the connecting rod is directly connected with the crank of the driving shaft, which may therefore be either above or beneath the cylinder. Its parts being compactly disposed, it occupies only a small space, and it may be readily examined and repaired. In certain cases where the space is restricted it may be advantageously employed; but where no such restrictions exist, it can never compete in efficiency with the horizontal type.

It would be superfluous to give the details of these several types of engines in this place, as they have already been described in former articles. We shall therefore content ourselves with giving an example of the beam and the horizontal types, as illustrations of the most recent design and construction in those systems.

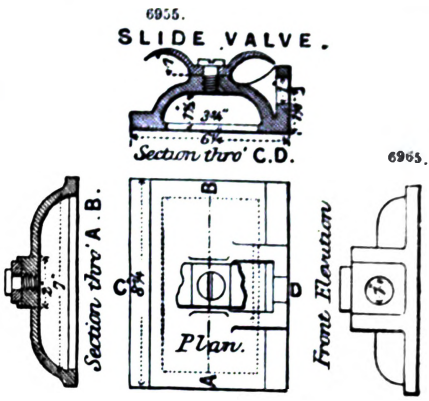

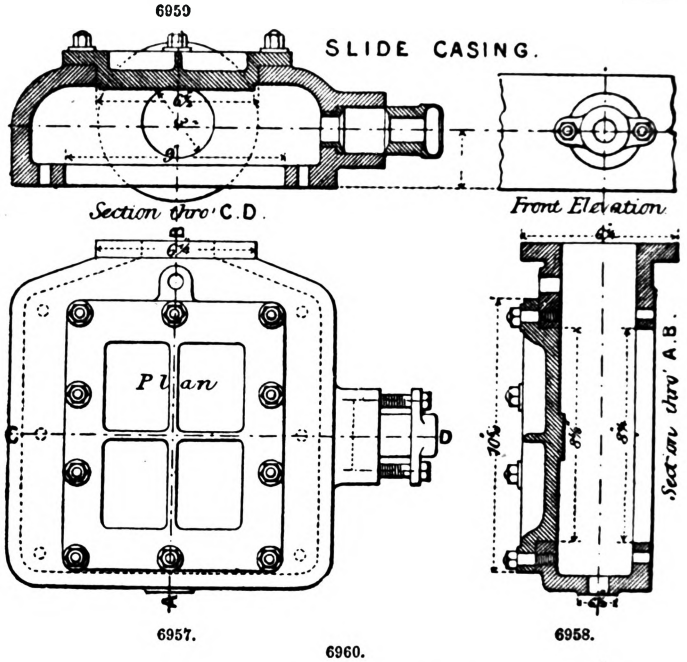

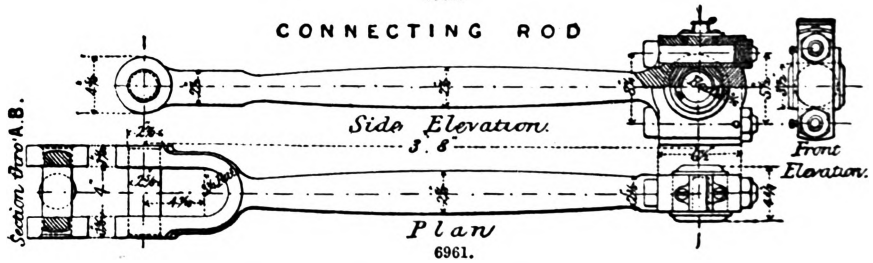

Fig. 6938 is a side elevation of a Cornish pumping engine. The cylinder A is 70 in. internal diameter, with a piston-stroke of 10 ft.; it is enclosed in a cast-iron steam-jacket communicating with the boilers by means of the pipe *a*, which also serves to return the water of condensation to the boilers, which are placed at a lower level, thus avoiding the waste of heat, which is often met with in other engines, by allowing the steam to escape from the jacket at nearly the boiling point. This jacket is surrounded by another casing of wood, the space between the two being filled with some bad conductor of heat, such as saw-dust or ashes; and the whole is enclosed by a casing of brickwork, or by an air-tight cavity formed by building a thickness of brickwork at a few inches distance,

which is plastered on the outside and covered with wood panelling. The cylinder cover and bottom are also protected from the cooling influence of the air; the former being fitted with a false lid or cap *c*, enclosing a thick layer of saw-dust or other bad conducting substance; and the space *d* under the bottom kept constantly filled with steam by a branch from the pipe *a*.

B is the main beam, cast in two plates and bolted together, with distance blocks between to keep them parallel with each other. To the upper part of the beam is fixed transversely, by means of brackets, a strong bar of iron, *g*, called the catch-piece, which, when the piston arrives at the bottom of its stroke, touches the blocks *h*, fixed on the spring-beams; the descent of the piston being thus arrested, no damage can be done to the cylinder by the engine making too long a stroke in-doors. C is the plug-rod for working the valves and cataract. D, the top nozzle, shown in section in Fig. 6939, contains three valves. First; V_1, the governor or regulating valve, for regulating the admission of steam into the chamber *k k* of the nozzle, whence it afterwards passes through the steam-valve V_2 into the cylinder. The opening of the governor-valve is constant during the working of the engine, that is, it is not moved by the engine, but only occasionally by hand, for the purpose of regulation. In proportion as the governor-valve is more or less raised, the steam is less or more wiredrawn, or reduced in pressure, as it passes from the steam-pipe into the cylinder. By this means therefore, although the pressure in the boilers may occasionally vary, the mean effective pressure in the cylinder may be maintained constant with great ease and precision. The motion of the governor-valve is commanded by a handle placed within reach of the engineman, and connected by a rod and lever with the stalk of the valve. Second; V_2, the steam-valve, for admitting the steam into the cylinder. When this valve is raised, the governor-valve being supposed open also, the steam finds a passage through it, from the nozzle-chamber *k k* into the space *l*, and thence by the steam-port *m* into the upper part of the cylinder The chamber *k k*, Fig. 6939, would appear to be divided by the cover a_2, belonging to the equilibrium-valve; but this appearance only arises from the position in which the line of section is taken, the steam being free to pass round, in the direction of the arrows, from the governor-valve to the steam-valve. Third; V_3, situated in the middle of the nozzle, is the equilibrium- valve, for opening the communication between the spaces above and below the piston. When therefore this valve is opened, the steam above the piston will, by its

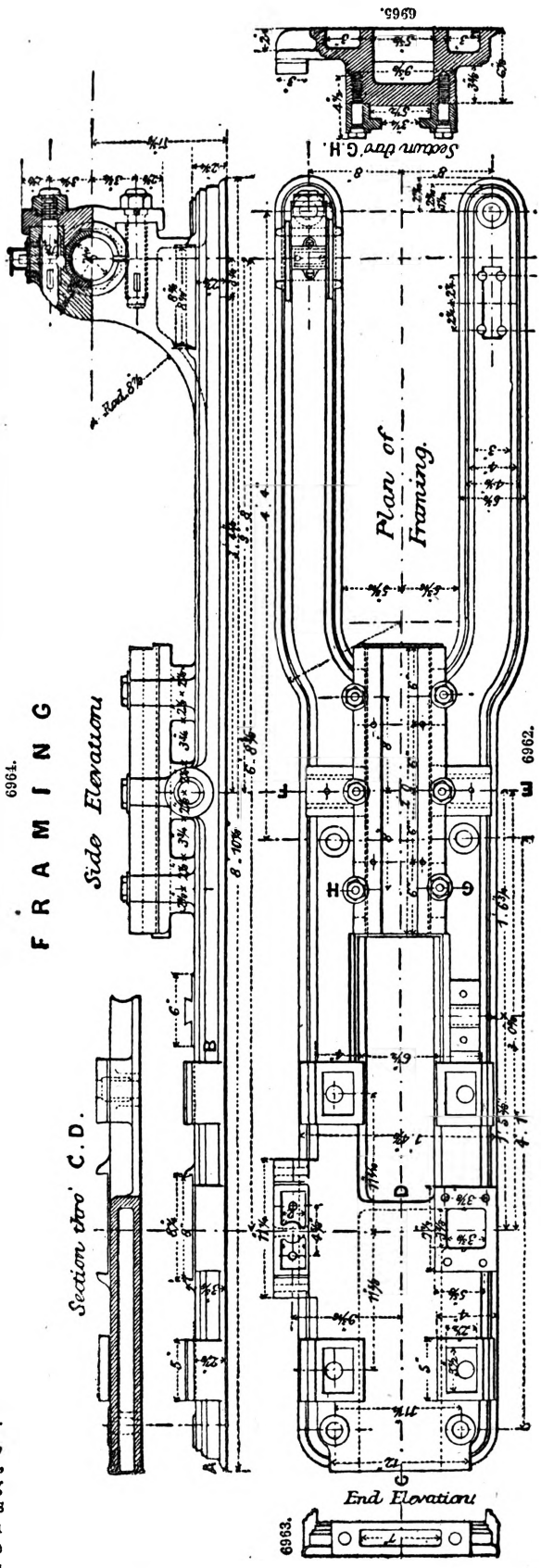

excess of elasticity, find its way along the equilibrium-pipe E, and by the lower port n, into the lower part of the cylinder, until the equilibrium is restored between the pressures above and beneath the piston; which is then at liberty to be drawn upwards by the preponderating weight of the rods hung at the outer end of the beam.

It will be observed that the three covers, a_1, a_2, a_3, which are bolted to the nozzle over the governor, steam, and equilibrium valves respectively, are of sufficient size to allow the valves to be lifted from their seats and taken out of the nozzle when the covers are removed, thus giving the opportunity for convenient examination or repair. The top nozzle is, like the cylinder-jacket, enveloped in an external casing of thin iron, leaving a space all round, which is filled with ashes or saw-dust to prevent loss of heat.

F is the bottom nozzle, a section of which is shown in Fig. 6940; it contains the exhaust-valve V_4, for opening or closing the communication between the lower part of the cylinder and the condenser. The nozzle-chamber above the valve communicates with the cylinder by the lower port n, while to the bottom of the nozzle, under the valve, is attached the eduction-pipe H; so that when this valve is lifted, the steam in the lower part of the cylinder is exhausted into the condenser.

G is the cataract, shown in section in Figs. 6941, 6942. The use of this ingenious apparatus is to regulate the period of opening the steam and exhaust valves, and thus to determine the interval between the successive strokes of the engine, that its rapidity of action may correspond with the quantity of water to be drawn from the mine. a' is a barrel in which works the plunger b', and which is simply a small plunger forcing pump. The inlet is by a valve c', opening freely upwards, but the outlet is contracted at pleasure by a movable plug d'. The pump is placed in a cistern of water G, and the plunger is attached by the joint to the arm e' of the lever $e'f'$. When the plug-rod C has descended nearly to the bottom of its stroke, a tappet upon the lower part of it strikes the end f' of the lever and thus raises the plunger b', the water at the same time entering freely under the plunger through the valve c'. When the stroke is finished and the plug-rod begins to ascend, the tappet quits the lever, and the weight h' which is fixed upon

6967.

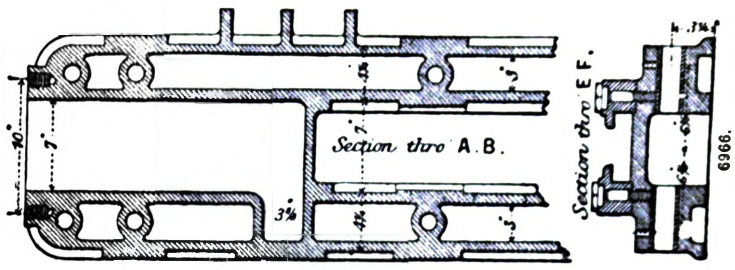

6963. 6970. 6968.

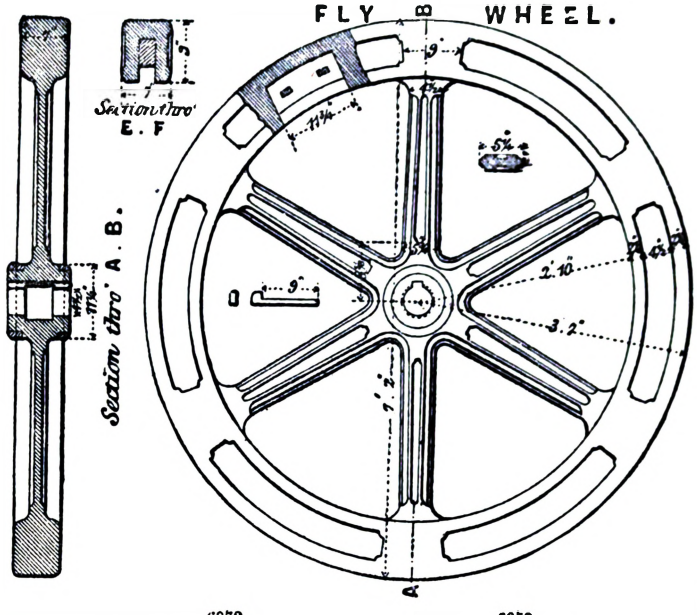

6972. 6973.

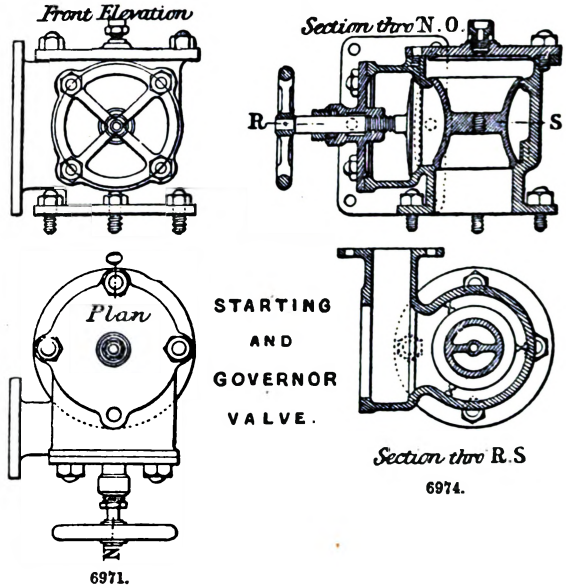

the arm e', and which has been raised by the preceding motion, becomes in its turn the motive power, tending to expel the water from the pump by forcing the plunger down. But the inlet-valve c' having closed, the only exit for the water is by the aperture left round the regulating plug d'. It is plain, therefore, that by augmenting or diminishing the size of this aperture, the exit of the water, and thereby the descent of the plunger, may be accelerated or retarded at pleasure. To the end f' of the cataract-lever is attached a rod m, which ascends vertically, opening first the exhaust, and a short time after the steam valve, thereby causing the commencement of the next stroke of the engine. It should be remarked that the rod m acts upon a catch that releases the weights w; these, by their fall, open the valves and occasion a suddenness of action which is considered a great advantage, particularly as regards the admission of the steam into the cylinder by the steam-valve. It is evident, then, that the interval between the time the tappet leaves the cataract-lever and the commencement of the next stroke, which in fact determines the interval between two consecutive strokes or the number made in a given time, depends upon the time occupied by the descent of the cataract-plunger, and therefore, ultimately, upon the degree of opening given to the regulating plug d'. This can be adjusted to a great nicety by means of a micrometer screw and handle connected with the regulating plug by a rod and the lever l'. By turning the handle the plug can be raised or lowered, and the aperture consequently increased or diminished as the quantity of water to be raised from the mine is greater or less, and the engine required to make a greater or less number of strokes in a given time accordingly.

6977.

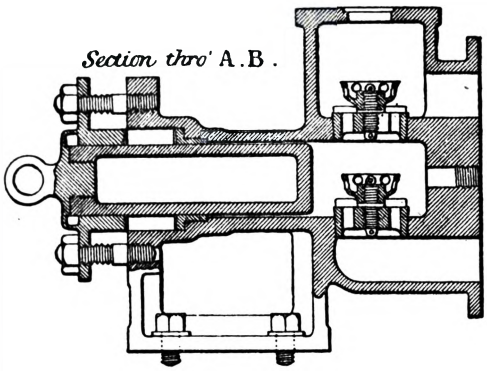

6976.

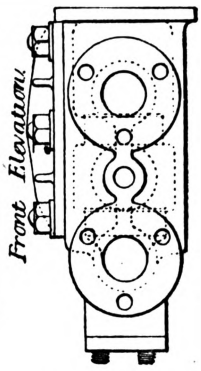

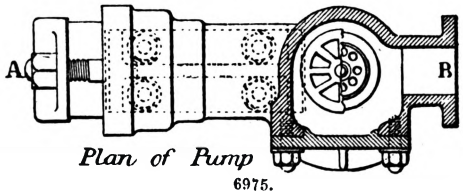

Plan of Pump

6975.

FEED PUMP.

6978.

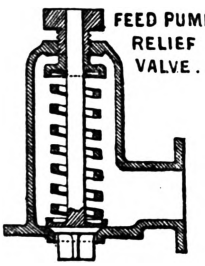

6979.

SAFETY VALVE.

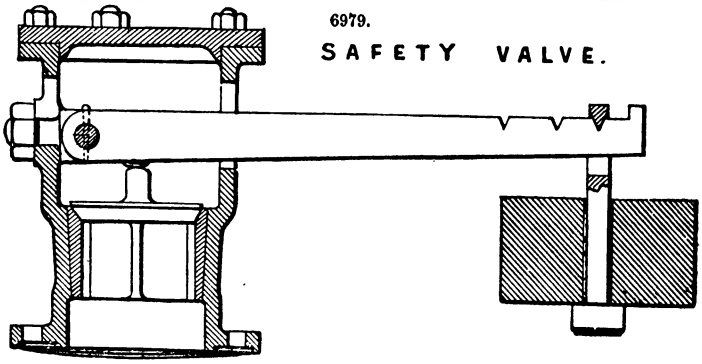

H is the eduction-pipe leading from the bottom of the exhaust-valve nozzle F to the condenser K. L is the air-pump, 2 ft. 9 in. diameter, the bucket of which has a stroke of 5 ft., half that of the piston. N is the feed-pump, of the ordinary plunger description.

As an example of the horizontal type we give a high-pressure engine of 12 horse-power designed by N. P. Burgh. Figs. 6943 to 6979 are to a scale of $\frac{3}{4}$ in. to the foot; the remainder being to a scale of $1\frac{1}{2}$ in. to the foot.

Fig. 6943 is a side elevation, and Fig. 6944 a plan, showing general arrangement.

Fig. 6945 is a diagram showing action of levers which command the slide-valve.

Fig. 6946 is a side elevation, Fig. 6947 a front elevation, Fig. 6948 a back end elevation, and Figs. 6949 to 6951 are sections, of the cylinder.

Fig. 6952 is a plan, and Figs. 6953, 6954, are sections, of the piston.

Fig, 6955 is a plan and sections, and Fig. 6956 a front elevation, of the slide-valve

Fig. 6957 is a plan, and Figs. 6958, 6959, are sections, of the slide-casing.

Fig. 6960 is a side and front elevation, and Fig. 6961 a plan, of the connecting rod.

Figs. 6962, 6963, are a plan and end elevation, Fig. 6964 a side elevation, and Figs. 6965 to 6967 re sections, of framing.

Fig. 6968 is an elevation, and Figs. 6969, 6970, are sections, of fly-wheel.

Fig. 6971 is a plan, Fig. 6972 a front elevation, and Figs. 6973, 6974, are sections, of the starting and governor valve.

Fig. 6975 is a plan, Fig. 6976 a front elevation, and Fig. 6977 a section, of feed-pump.

Fig. 6978 is a section of feed-pump relief-valve, and Fig. 6979 a section through safety-valve.

See BOILER. DETAILS OF ENGINES. ENGINES, *Varieties of.*

STAVE-MAKING AND CASK MACHINERY. FR., *Machines à fabriquer les douves et les barils;* GER., *Dauben und Fass-Maschinerie;* ITAL., *Macchina da botti;* SPAN., *Maquinaria para hacer duelas y barriles.*

George Hadfield's Machines for making Casks.—Much of the machinery used in the manufacture of casks has in itself no pretensions to novelty; but no good idea could be given of the system without carrying the reader through the various processes. Let it be supposed that casks of 36 gallons are required to be made for containing beer. The timber employed is that known in the market as Dantzig pipe staves, which measure 5 ft. 10 in. to 6 ft. long, and in cross-section present a square figure of about the dimensions of the breadth of the stave to be cut. The square logs are first cut into lengths, equal to the length of stave required, and the short ends put aside for making the cask-heads. In order to cut up the logs expeditiously, a fixed trough or angular guide is provided to receive the log, whose end is brought up against a fixed stop near the end of the guide. A transverse slit through the guide allows a circular saw to pass through it and sever the wood. The saw is carried at the extremity of a balance-frame, which is depressed by hand, to bring the saw on to its work. It is driven by a band from a pulley on the cross-shaft, which forms the fulcrum for the frame.

The blocks, thus prepared, are next split up to the proper thickness for staves, by the aid of a saw-bench; the block being pressed by hand against a rotary saw, which projects up through the table of the machine, and guided by a fixed vertical gauge-plate, over the face of which the block is slidden by the workman. In this way each block is divided longitudinally into six staves. In like manner the short pieces before mentioned are slit up, to form the heads of the cask.

The next operation is to gauge the length and bevel the ends of the staves. This is done by a machine, shown in front elevation at Fig. 6980. It consists of a bed *a*, carrying two headstocks *b*, *c*, the latter of which is adjustable. On the headstocks are mounted a pair of inclined rotary saws, for gauging and bevelling the staves. Between the saws is a sliding carriage *d*, on which the staves are severally laid, and the workman, holding the stave firmly, thrusts the carriage forward on its slides, and passes the ends of the stave under the action of the rotating saws. He then draws back the carriage, and repeats the operation. This is the first shaping operation; and at this stage the stave is simply a flat piece of wood of uniform thickness, but with bevelled ends, and its side edges are square and parallel to each other. It must, however, have imparted to its outer face a convexity, both in the direction of its length and its width, besides being tapered and bevelled.

6980.

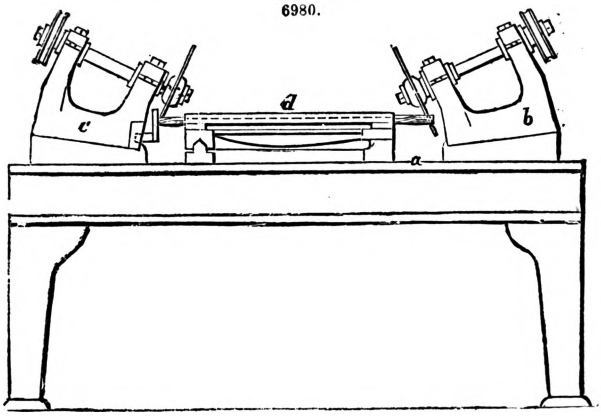

6981.

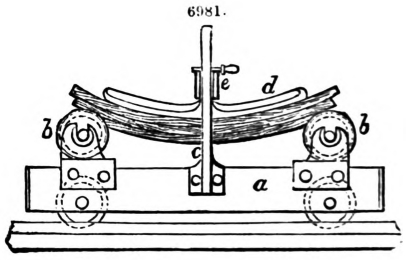

To produce the requisite convexity, a steaming and bending process is adopted. The staves are thrown into a steam-chest, and subjected to the moistening and heating effect of the steam for about five minutes, to soften the wood. They are then packed upon carriages similar to that shown in side view at Fig. 6981. A series of these carriages is provided, to run upon a double line of rails laid under a shed, containing the steam-chest. The carriage, it will be seen, is a kind of truck *a*, on which two transverse rollers *b*, *b*, are mounted, for supporting five piles of staves abreast of each other. The periphery of these rollers is concaved, to give a transverse convexity to the staves, when pressed down upon them, and midway between the rollers *b* is a pair of standards *c*. The carriage, when laden with the piles of hot staves, is moved forward under a screw press standing over the railway. A transverse bar, provided on its under side with curved pressing pieces *d*, is then forced down by the press into contact with the staves, until they take the curved form, Fig. 6981. Pins or holdfasts *e*, passed through the standards *c*, then retain the pressing bar in its place, and the carriage is released from the press to allow of a second carriage-load of staves being similarly treated. The carriage, when released from the press, is turned on to a second line of rails, and there left for the staves to cool, and thus receive a permanent set.

The next operation is the jointing of the staves; that is, the tapering of the opposite ends, and the bevelling of the edges. By hand, this operation is very irregularly performed, a hand-plane being used, guided only by the practised eye of the workman. The surface of the joint is, moreover, smooth, which increases the tendency of the staves to start when the cask is subjected to rough

usage. In the jointing machine, shown in side elevation at Fig. 6982, and in partial end elevation on an enlarged scale, Fig. 6983, the staves are jointed, so as to be practically identical. No

6982.

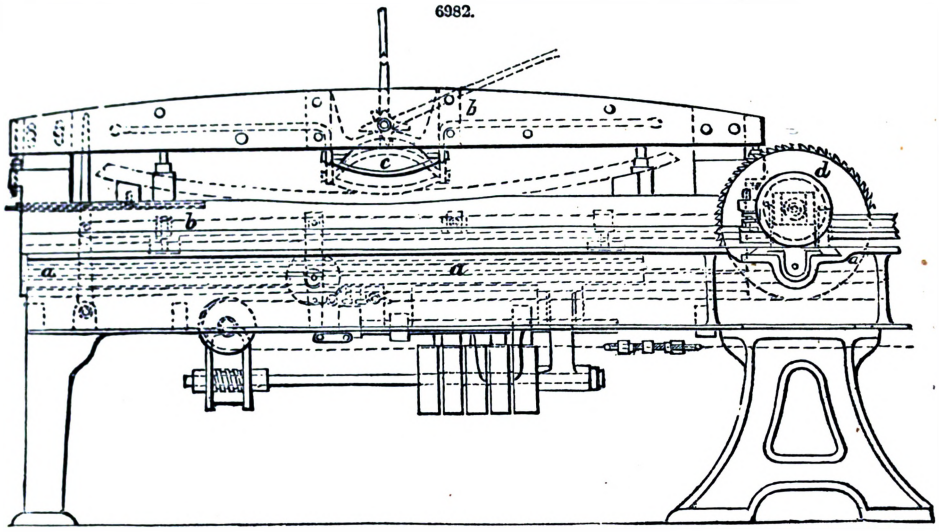

fitting therefore is required when setting them up to form casks. This machine consists of a long bed *a*, over which traverses, supported in suitable guides, a clamping *b*. This carriage receives motion from an endless chain, which moves alternately in opposite directions. The carriage is fitted to receive a curved stave and hold it down firmly by means of a clamp *c*, while the stave is presented to, and passed down under the action of, a pair of inclined saws *d*, *d*, which are adjustable both to and from each other, and in their inclination, to suit different sizes of staves. When the carriage is at either end of its traverse, the attendant takes a curved stave and clamps it in the carriage. The return motion will bring the stave under the action of the inclined saws, which will simultaneously joint the opposite sides of the stave, thereby reducing it to the required taper form. The attendant then raises the clamp *c*, puts in and clamps a fresh stave, and the reverse motion of the carriage brings the stave, in like manner, under the action of the saws. No time is therefore lost in the working of the machine.

6983

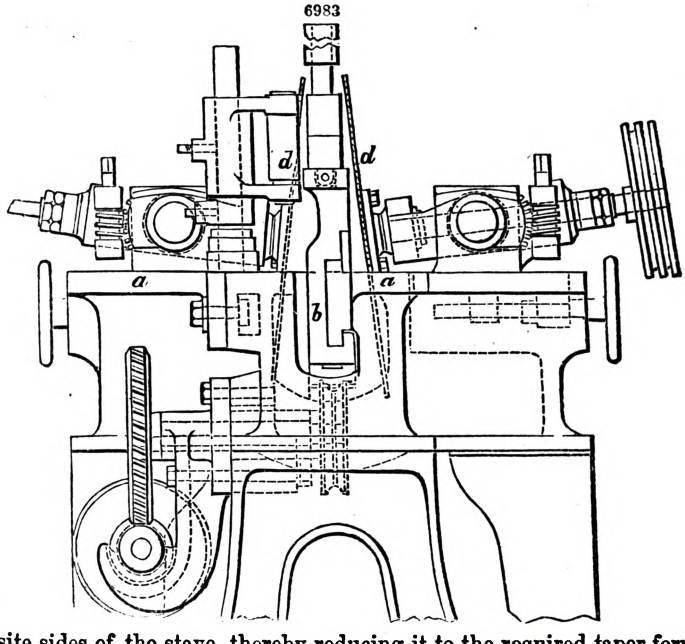

In the manufacture of ale barrels, more especially those intended to receive pale and delicately-flavoured ales, it is important to get out the tannin from the wood. This is usually done by the process of charring, but the inner surface of the barrel is thereby injured. To avoid this, a steaming process is adopted. The staves to form the cask are put together and bound by temporary truss hoops. The cask is then set upon an iron plate and over a steam-pipe which projects through the plate, and the top of the cask is covered by a loose head. Superheated steam is then let into the cask, and in about five minutes the dissolved tannin will trickle down out of the pores of the wood.

The operation of finishing the ends of the cask, termed chining, which fits it to receive the heads, is effected in a peculiar adaptation of lathe, which is shown in plan, Fig. 6984; the barrel and its supports being in section. One end of the barrel *a* is inserted in a chuck *b*, carried by the mandrel *c*, and the other end is supported by a cone-faced annular chuck *d*, mounted in a bearing *e*, carried by a sliding table *f*, which is capable of adjustment lengthwise of the lathe-bed. This table *f* also carries two slide-rests *g*, *h*, in which are fitted the cutters for chining the barrel. The cutters of the slide-rest *g* finish the bevelled edge, and also hollow the inner face of the barrel; and the cutter of the slide-rest *h* turns the groove for receiving the barrel-head. Rotary motion is given to the barrel, and the cutters are brought into action by the attendant moving the cutters by the

hand-levers g^* and h^*. When one end is finished, the barrel is released from the chucks, and its other end is, in like manner, submitted to the cutting tools.

6984.

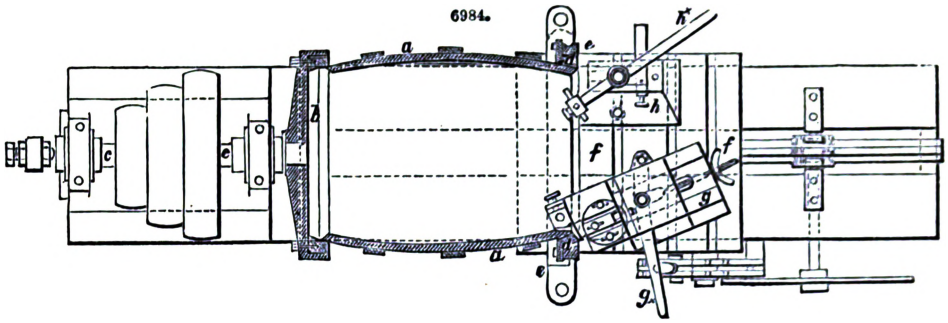

Having thus far followed the shaping of the staves, and the conversion of the same into cask bodies, it will be necessary to direct our attention to the formation of cask-heads. This is comparatively a simple operation, but it has, nevertheless, developed some ingenious mechanical devices. The wood to form the heads having been split up as already described, is submitted to a jointing machine, Fig. 6985, for squaring the edges. The wood is piled up on a travelling table a, against a gauge-plate b, and held firmly by clamps c, c. The traverse motion of this table over the bed of the machine carries the wood past a rapidly rotating cutter d, which planes the edges presented to its action. The clamps are then slackened, and the pieces requiring both edges to be jointed are again submitted to the action of the cutter.

6985.

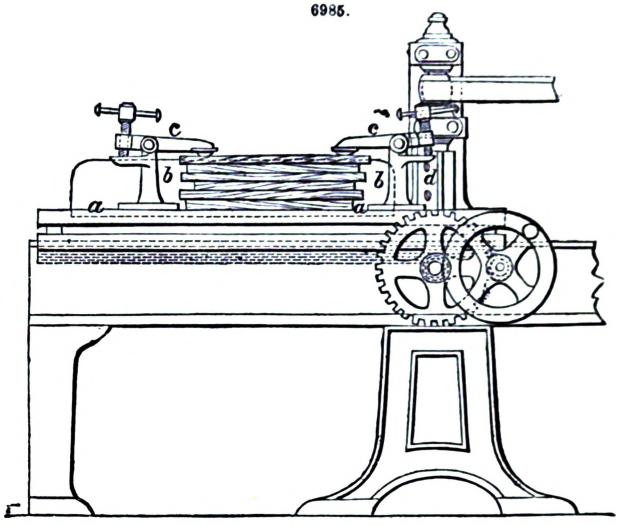

The dowelling together of the pieces is the next operation. For this purpose their contact edges are in turn pressed into contact with rotating drills, which rapidly drill the dowel-holes. The dowel-pins are made by a simple machine, which, by a rotary saw, cuts up strips of wood in width corresponding to the length of pins required, and then, by a rotary hollow cutter, rounds the ends of the pins. These pins are driven into the drilled holes of one piece, and a corresponding drilled piece is forced into contact therewith; and in like manner some four or five pieces, which are to form a head, are hammered together, and held fast by the dowel-pins. The next operation is to cut these dowelled pieces into a circular disc, for which purpose a modified form of band-saw is used.

6986.

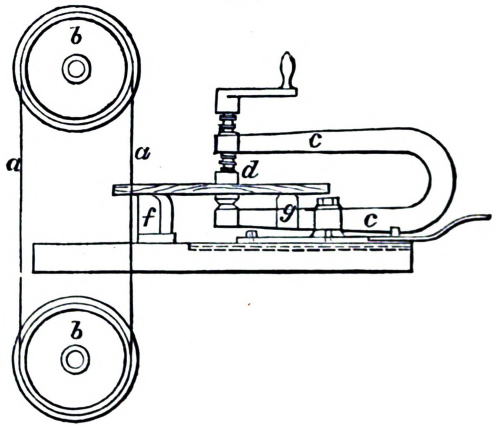

Fig. 6986 shows in elevation so much of a band-saw adapted for cutting out the heads of casks, as will explain its action; the object being to cut the heads with rapidity, and of any desired size. a is the saw-blade, running over tension-pulleys b, b. On a plate capable of sliding in guides on the table of the machine, is mounted a horse-shoe swing frame c, for receiving the wood to be cut. This frame is capable of adjustment to and from the saw, to suit different diameters of cask-head. The frame c is provided with two swivel clamping jaws, d and e, the upper one of which is capable of being raised and lowered by a vertical screw and winch-handle, for the purpose of clamping the dowelled wood that is to be placed between them. Rests f and g are used for steadying the wood.

To bring the work into contact with the saw, it is only necessary to swing the frame *e* on its fulcrum, and the saw being set in motion, it will quickly enter the wood. The attendant then gives the wood a slow axial motion under the saw, which shapes it into a circular disc. This being done, he slackens the clamps, and releases the disc; then puts in another head, and repeats the operation.

In order to complete the head, its periphery has to be bevelled, to fit the groove in the cask; and to ensure a permanent tight junction with the cask, it has been found necessary to turn the head oval, that is, with a slightly superior diameter, across the grain of the wood; this is to allow for shrinkage. For this purpose, the machine shown in side elevation, Fig. 6987, and in partial end view, Fig. 6988, is employed. It is somewhat complex in its construction, but

6987.

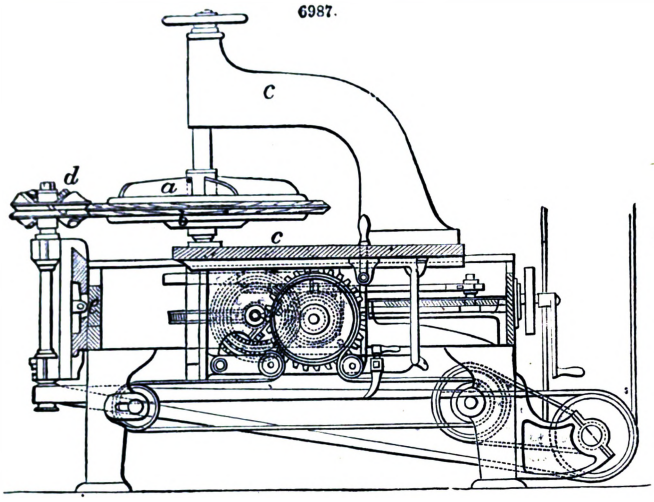

6988.

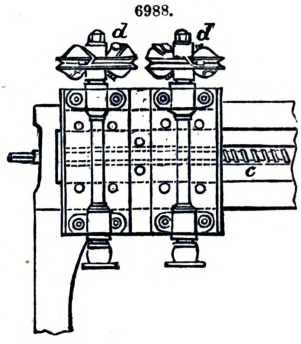

the following description will give a fair notion of its action. The disc to be turned is placed between swivel-clamps, *a*, *b*, which are carried by a sliding table and bracket-arm, *c*. The disc is held by the table and bracket in the line of cut of a pair of rapidly rotated cutters, *d*, *d*, which are mounted on a traversing vertical frame, that slides across one end of the machine. These cutters are driven in opposite directions. and are intended to act alternately on the head, and thereby cut the wood in the direction of the grain, without the rotation of the head being required to be reversed. A slow intermittent axial motion is given to the head, by gearing operating the spindle of the lower clamp *b*; and at the same time a slight traverse is given to the table *c*, with its bracket-arm, in order to ensure the oval or irregular turning required. The cutters are suitably formed to cut a double bevel, and they are moved into and out of work by the attendant, who, watching the axial movement of the head, slides them to and fro as required, by turning a traversing screw *e*. The head being finished, the upper clamp *a* is raised by the hand-wheel, and the head replaced by another disc; care being taken to place it in the machine so as to ensure the larger diameter being cross-wise of the grain.

6989.

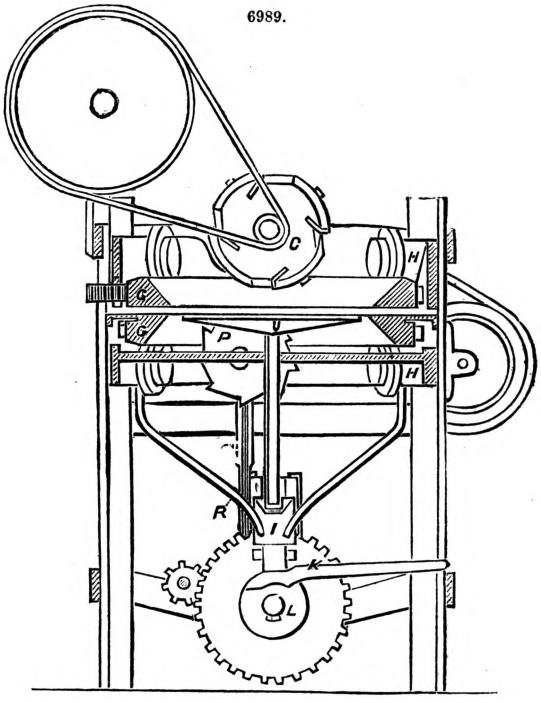

Fig. 6989 serves to illustrate the action of Alfred Beuster's barrel-heading machine. The object of this machine is to plane the upper surface of a barrel-head to the desired oval shape, make the upper and lower chamfer, and also to revolve, clamp, and loosen the work automatically, the attention of the operator being only required to arrange the pieces for a head on a table in front of the machine and push them forward. In doing this, the finished head is pushed out on the opposite side of the machine and deposited on a table placed conveniently to receive it. Referring to Fig. 6989, C is a revolving planer; G, G', revolving toothed rings; and H, H', rising and falling frames, arranged to act in combination with the planer C U is a turn-table; P, a revolving cutter; I, standard; K, a hinged board; R, a lever; Q, a sash, the alternating motion of all these parts being given by the cam L.

In banding or trussing casks, it is well known that the metal hoops require to be slightly coned, to allow of their fitting tightly the tapering periphery of the cask. This is effected by a modification of the machine of Horsfall and James. The hoop iron, having been cut to lengths, and punched to receive the rivets for coupling the ends, is passed between a pair of nipping rolls, one being set slightly out of the horizontal. A tighter nip is therefore given to one edge than the other, and the metal is thereby slightly spread at one edge. A third roll, set higher than the nip of the pair of rolls, turns the hoop iron upwards, and causes it to curl into the form of a hoop, which hoop is then riveted by hand, as usual.

The casks may be trussed by hand, but preferably they are trussed by a modification of the machine of Robertson. This machine consists of two conical metal cases, which fit one on to the other; one being fixed, and the other movable, by the action of a press. The cask may be built up or inserted in one of these conical cases, which are each divided down their middle, and the parts coupled by tightening screws. They are also grooved, to receive the metal hoops. When, therefore, pressure is applied to bring the two conical cases together, the cask is forced into the hoops placed in the grooves or recesses. By slackening the coupling screws and separating the conical cases, the cask, now mechanically trussed, is readily removed from the machine.

With the assistance of three attendants, the steaming and bending of the staves, to fit them for the jointing machine, may be effected at the rate of forty staves in five minutes. The jointing of these staves, with the aid of one attendant, is completed at the rate of three a minute. To chine a cask—that is, to turn and groove the ends—with a man attending, requires three minutes. Rounding the cask-heads by the band-saw is effected at the rate of sixty an hour. And the oval turning and bevelling of the heads is completed at the rate of twelve pairs an hour.

See WOOD-WORKING MACHINERY.

STEAM-CRANE. FR., *Grue à vapeur*; GER., *Dampfkrahn*; ITAL., *Gru a vapore*; SPAN., *Grua de vapor*.

See LIFTS, HOISTS, AND ELEVATORS.

STEAM-ENGINE. FR., *Machine à vapeur*; GER., *Dampfmaschine*; ITAL., *Macchina a vapore*; SPAN., *Máquina de vapor*.

See BOILER. ENGINES, *Varieties of*. STATIONARY ENGINE.

STEEL. FR., *Acier*; GER., *Stahl*; ITAL., *Acciaio*; SPAN., *Acero*.

The term steel is vaguely applied to certain combinations of the metal iron with carbon; thus considering wrought iron to contain little or no carbon, cast iron as much as 5 to 10 per cent. of carbon, steel has been regarded as occupying an intermediate position; but as there is no boundary-line existing in reality, and as the percentage of carbon can be decreased by the slightest shades, gradually forming a continuous series between cast iron on the one side and wrought iron on the other, there is no possibility of taking out any particular part of this continuous gradation and distinguishing it by the name of steel. Other substances, such as tungsten, wolfram, also enter into the composition of steel, and considerably modify its properties and uses. It would be a good method, therefore, to call every combination of iron with another chemical element a steel; and to distinguish between the varieties of steel, both with regard to qualitative and quantitative differences of composition.

The colour of steel is a bright greyish-white; its texture is uniformly granular, the better the quality the smaller the grain. Sound soft, that is, unhardened, steel never exhibits the coarse texture characteristic of crude cast iron, nor the fibrous texture of bar iron. Hardened steel shows a fracture very similar to that of the finest silver, so close that the granular texture can hardly be detected by the naked eye. When red-hot, steel is nearly as malleable as bar iron, and may be welded, but very careful management is required to prevent its becoming decarbonized By immersing a piece of steel in dilute hydrochloric or nitric acid the texture of the metal becomes apparent, and this test may be applied to determine the quality. The specific gravity of steel varies from 7·62 to 7·81, and decreases in hardening. The toughness, tenacity, and hardness of steel increase with the quantity of carbon it contains, but good steel never contains graphite. The high degree of elasticity exhibited by good steel decreases with the hardness.

After what has been said on alloys generally, and on those of iron in particular, it is not difficult to understand the relation in which carbon stands to iron; and there is no doubt as to the necessity that it should be present in iron in order to constitute steel. We find, so far as carbon is concerned, that iron with less than ·65 per cent. of carbon is wrought iron; from that to 2·3 per cent. of carbon, forms steel; and when the quantity of carbon is larger, the metal is considered cast iron. There are other substances which impart hardness to iron, and perform in that respect a similar office to carbon.

The different methods employed for producing steel may be classified as follows;—

1. From the ore direct, by reduction and carbonization. Ore steel.

2. From pig iron by decarbonization. Pig-iron steel. By means of gaseous oxidizing agents, as air in the Bessemer process. By means of solid oxidizing agents, as are saltpetre, and so on, as in the puddling process and Heaton's process.

3. From wrought iron by carburation. Wrought-iron steel. By fusion with pig iron, as in the Siemens-Martin process. By fusion with carbonaceous matter, as in Mushet's, or the Indian processes. By heating in charcoal below fusion, as in the cementation process. By heating in an atmosphere of carburetted hydrogen without fusion, as in Macintosh's process.

A comparison of specimens of various kinds of steel shows that the quality of the metal depends chiefly upon the nature of the raw materials used, and accordingly it is only where the very best ores and purest coals are employed that we find the finer grades of steel produced.

We shall not here describe all the numerous methods in use for the manufacture of steel, but only those most extensively practised.

Cementation Steel.—The converting furnace used in the manufacture of cementation steel, consists of two rectangular chests, called pots, *i*, *i*, Figs. 6990 to 6993, made of silicious freestone or

fire-brick, capable of bearing a great degree of heat unchanged. If of freestone, the stone is cut at the quarry into rectangular pieces, all 6 in. thick, and so arranged as to form, when put together,

6990.

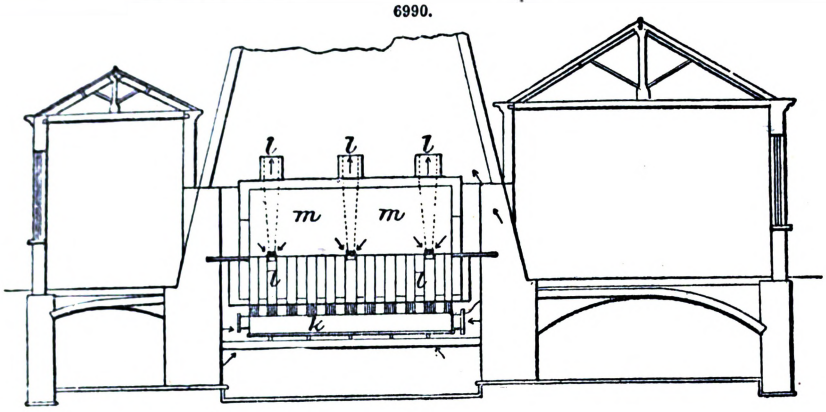

6991.

6992.

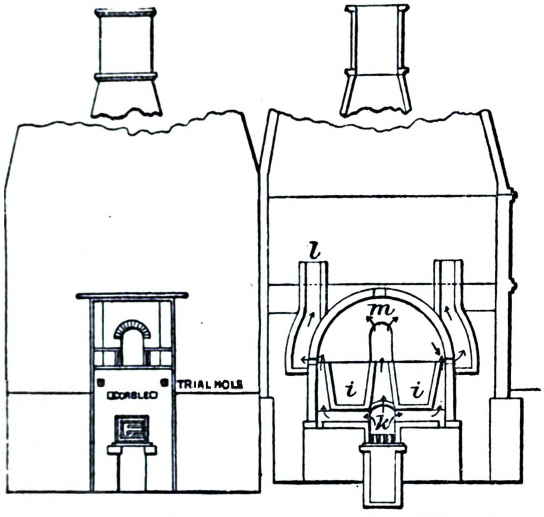

6993.

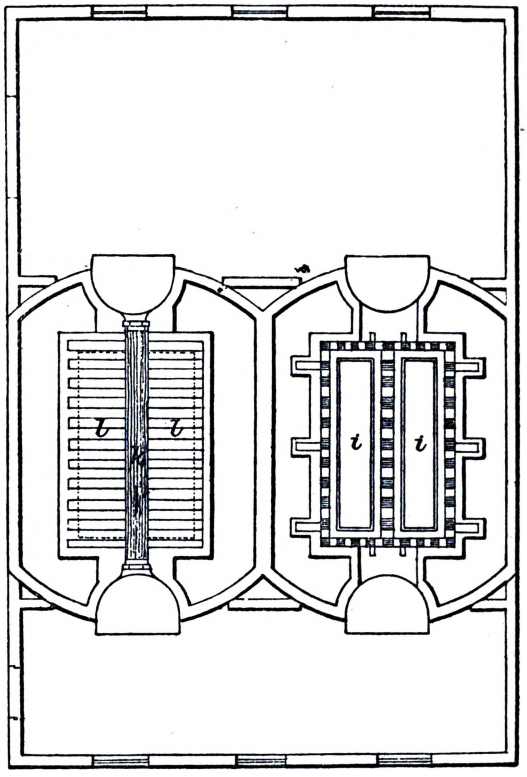

two chests from 12 to 14 ft. long, and about 3 ft. 6 in. wide and deep, supported, even where the ground is tolerably favourable, upon about 4 ft. of solid masonry; for it is of the greatest consequence that there should be no sinking or giving way of the foundation, so as to crack the chests and admit air, which would spoil the conversion. The masonry should finish with a course of fire-brick; and upon that again is laid cross-walls of fire-brick, 10 in. thick and the same distance apart, upon which the chests will immediately rest, while the brick divisions form flues underneath them. The chests are placed 18 in. from, and parallel to, each other; and the space between them is divided into flues *l*, *l*, corresponding with those which pass underneath, up the opposite side, and at the ends of the chests, into the fire-brick wall which covers them all.

This vault *m* has an arched opening at each end, large enough for a man to creep into when it is required to lay in iron or take out steel; at other times they are bricked up temporarily, and plastered with clay or wheelswarf, a mixture of grit and steel dust obtained from grindstones employed to grind steel articles. There are also two small temporary openings, one over each chest, through which bars can be put; and in these a piece of sheet iron is laid when so used, with the edges turned up, to pass the bars more easily and prevent injury to the brickwork.

Out of the vault rise three small chimneys on each side opening into the large cupola, which carries the smoke to a considerable elevation, and prevents the wind from having much effect upon the draught of the furnace fire. The fire-grate *k* is under the middle row of flues, and the whole length of the chests. It has a strong metal door at each end, which is kept close shut, except when a fresh charge of coal is being put in. The fire-brick work and also the chests are built with ground-clay and water, mixed to a proper consistence, instead of lime mortar.

The bars of iron submitted to this process are principally from 2 to 3 in. broad and $\frac{5}{8}$ to $\frac{3}{4}$ in.

thick, except where they are required for railway springs, and then they are made from 3½ to 4 in. in breadth. A layer of charcoal powder is spread over the bottom, then a layer of bars, and so on alternately. The edges of the bars are laid so as to touch each other, or nearly so, without any particular allowance for expansion in that direction; the inequalities in the bars being sufficient for that purpose. A layer of bars should be covered about ½ in. thick with charcoal, finishing with a thicker layer than usual over the top. After both chests are filled they are covered over with from 4 to 5 in. in thickness of wheelswarf. This grit contains a portion of iron and steel, and their oxides, in minute divisions, intimately mixed with the grit, which seems to possess the valuable property, for this purpose, of undergoing a partial fusion when hot, and forming a kind of cindery slag, which perfectly protects the steel underneath from the action of the air.

Each furnace has a square opening of about 5 in. in the centre of the end of one of the chests, which is continued through the walls to the outside of the furnace, into which two or three bars, called tap-bars, are laid, partly in and partly out of the chests, but in such a manner that they can be drawn out when required. To prevent access of air to the chest, the rest of the opening is carefully filled up with fine ashes, well rammed in. The man-holes and small openings are now made up as before mentioned; a fire of coals, which has been previously prepared, is put upon the grate at both ends, and will require constant attention day and night for six to eight days. The fire is raised gradually, and the intensity of it regulated solely by the experience and judgment of the converter.

The coal suitable for converting is such as will burn away in a good draught, leaving scarcely any residuum but white ashes, which fall between the bars into the ash-pit. That coal which in burning runs together into a mass of large cinder would not do at all, because in that state it would stop the draught from passing between the grate-bars through the fire. Each firing will take from 4 to 5 cwt. of coal, and will require renewal every 2½ or 3 hours; and a heat of steel converting will require, on an average, 12 to 13 tons of coal or more, according to the size of the furnace and the time required.

A furnace of the size generally preferred will hold from 16 to 18 tons of iron. In larger furnaces the steel cannot be so equally converted; and in smaller the conversion costs more a ton. The iron is considered to gain about 4 lbs. to the ton in this process; but this will depend upon the kind of heat used, whether a mild one for springs, or a hard one for melting; but, after all, the gain in weight must only be regarded as an approximation.

When the fire has been continued so long that the degree of conversion desired is supposed to be nearly attained, one of the tap-bars is drawn out—the opening stopped up. When cold, the bar is broken; and by its appearance a judgment is formed of the state of the whole, and the firing regulated accordingly. In a few hours more a second bar is drawn, and the progress made in the interim observed; this is a further guide for the continuance of the fire for some time longer, or for allowing it to go out, as the case may require.

The whole quantity put into a converting furnace at one time is called a heat of steel; and, according to the degree of carbonization required, it is called a spring-heat, a cutler's-heat, a shear-heat, a file-heat, or a melting-heat. When the fire is let out, the furnace requires no attention for three or four days. By that time the man-holes may be opened to allow a draught of air through, to hasten the cooling; and in a few days more it will be cool enough for a man to enter, in order to break the covers off, and take out the steel, which is generally done while the steel is still too hot to be taken out with the bare hands. The men's hands are protected in doing this by several thicknesses of coarse cloth. Some of the charcoal, when the small dust is sifted from it, will be fit to use again mixed with fresh charcoal.

Steel obtained by this process is never quite equally converted. Near the bottom and sides of the chests it is more carbonized than in the middle; and this is true also of every single bar, the external being more converted than the internal parts. The bars are also covered with blisters; this gives rise to the appellation, blistered steel.

The blisters are doubtless owing to some impurities in the iron, which in the furnace take the gaseous form, and raise the blisters by the force of their elasticity. What those gases are is unknown; but it is known that, whatever the impurities, they are got rid of in the crucible of the melting furnace when bar steel is made into cast steel.

Bessemer Process.—The most recent and advanced practice in the working of this process was fully described in a lecture given in the United States by Alex. L. Holley, and to his lecture we are greatly indebted for the following particulars.

The Bessemer process as first performed, and as still practised to a very limited extent, with irons rich in manganese, consists in applying the blast until all but ½ to ½ of 1 per cent. of the carbon is burned out, and then casting the product. Stopping the blast at this point, however, is very uncertain; hardly any irons contain the right amount of manganese for this treatment, and the process has certain mechanical objections. Hence the nearly universal practice is to blow the iron until all the carbon is exhausted, a point readily determined. But the product now contains so much oxide of iron, that it is red-short and crumbles in working. To reduce this oxide of iron, manganese, which has a stronger affinity for the oxygen than the iron has, is added, by running into the converter 6 to 8 per cent. of melted Franklinite, or spiegeleisen, which is a pig iron containing about 10 per cent. of manganese. One quarter to 1 per cent. of carbon is also added to the product by the spiegeleisen, so that the result is the same as in the first process, and the convenience and economy are far greater.

No phosphorus whatever is removed from the iron in the Bessemer process, and only 12 to 15 hundredths of 1 per cent. of phosphorus are admissible in steel. More will make it both brittle and unmalleable. Hence the pig iron treated must not contain above one-tenth of 1 per cent. of this element. The usual percentages of sulphur, manganese, silicon, copper, and the foreign elements commonly found in average pig iron, are admissible. Suitable ore for Bessemer iron is unlimited in the Lake Superior and Missouri Iron Mountain regions, and is now developing

abundantly in Northern New York, Central Pennsylvania, and at various points in the Southern States.

A standard American Bessemer plant has a melting department. This is shown in plan, the ground floor by Fig. 6994, the furnace working floor by Fig. 6996, and the cupola charging floor by Fig. 6995. Fig. 6997 is a section at A B, Fig. 6994; and Fig. 6998, section on E F, Fig. 6996. There are hoists at *a* for coal, and at *b* for iron; four cupola furnaces and their platforms and blowing machinery; two ladles K standing on scales, for weighing the melted iron, and spouts M, N, Fig. 6998, for conducting it to the vessels, or converters; two reverberatory furnaces for spiegeleisen, and their spouts.

The converting department, shown in ground plan by Fig. 6996, and in cross-section by Fig. 6998, contains two 5-ton to 7-ton vessels N, in which the

6994.

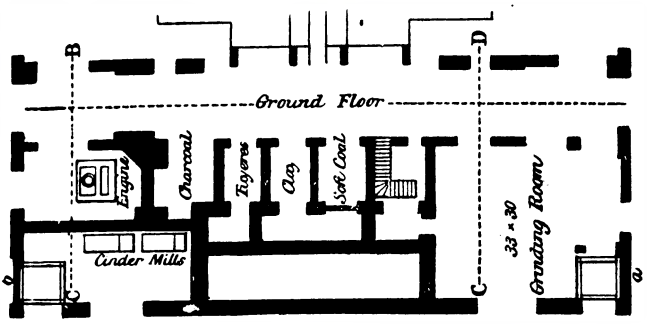

6995.

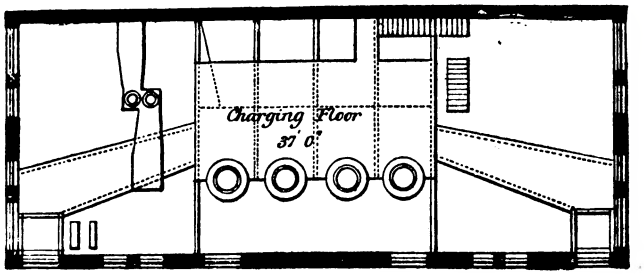

6996.

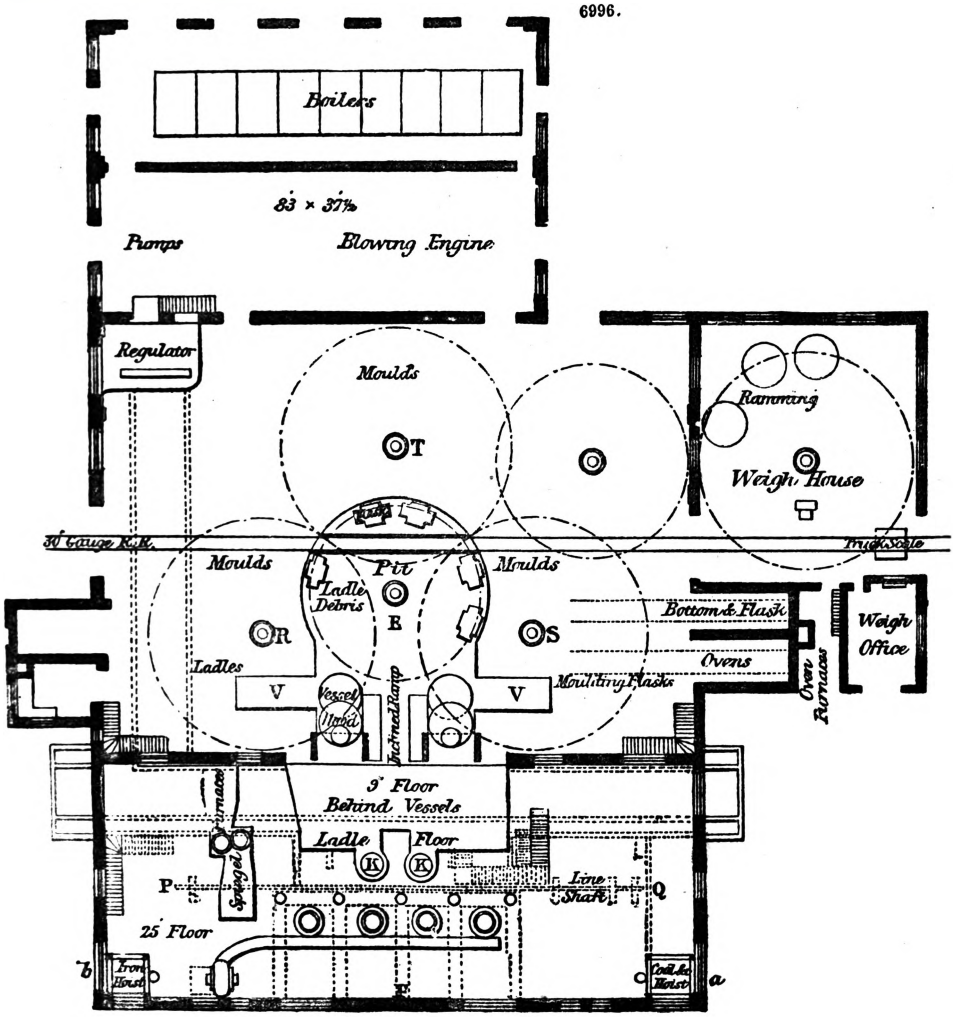

melted iron is treated by air-blasts. Also a ladle and a hydraulic ladle-crane at E, Fig. 6996, by means of which the steel is received from the vessels and poured into the ingot-moulds, which stand upon a depressed part of the floor called the pit. Three other hydraulic cranes swing over the pit, to set the ingot-moulds and remove and load the ingots. Two of them swing over the vessels, to assist in their daily repairs. The water and air pressure reservoirs are surmounted by a platform, Fig. 6998, standing upon which, boys, by turning valves, admit water to the cranes and air to the vessels, by means of underground pipes. All the constant operations of hoisting, lowering, and blowing are conducted from this platform, which overlooks the entire converting department. The details of these and other parts will be further described.

6997.

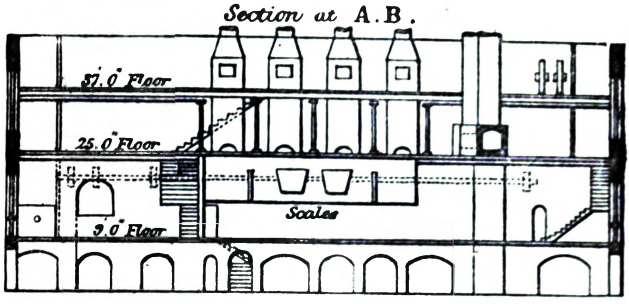

6998.

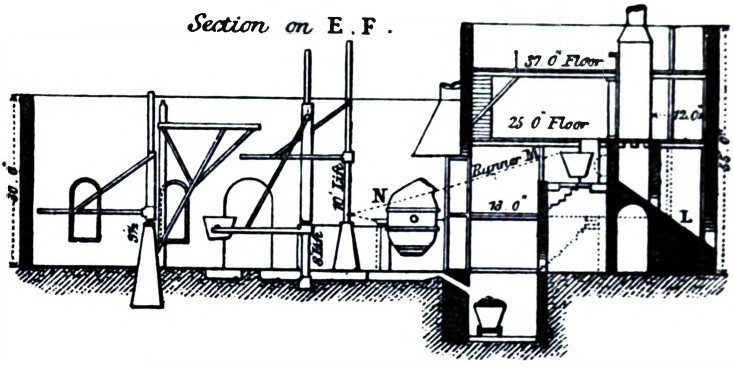

The engine department contains a blowing engine, usually a double engine, capable at normal speed of receiving 8000 to 11,000 cub. ft. of air a minute, and delivering it at 25 lbs. pressure on the square inch. The water-pressure pump, for actuating the hydraulic machinery, is a Worthington duplex, with two 25-in. steam-cylinders, and two 9-in. water-cylinders, 24-in. stroke. The boilers should be capable of 800 horse-power.

6999.

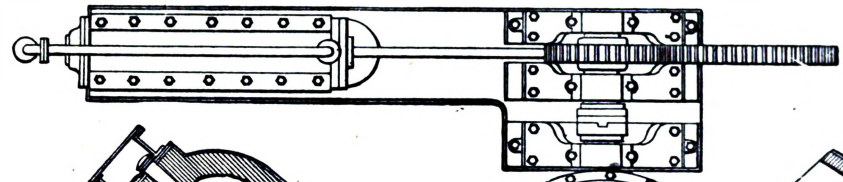

7000.

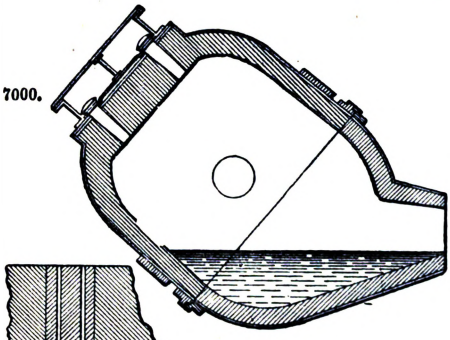

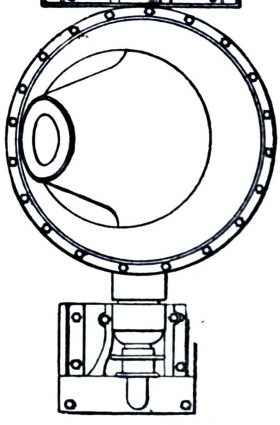

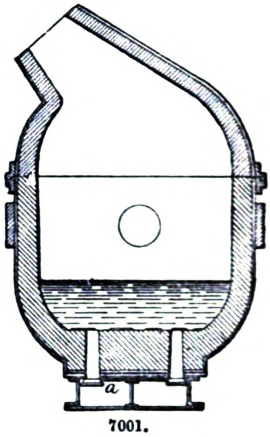

7001.

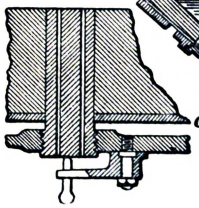

7003.

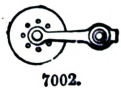

7002.

The pig iron, having been hoisted to the charging platform, is put, with 20 per cent. of coal, into one of the cupolas, and melted. When say 12,600 lbs. have run into one of the ladles K, the latter is turned over by means of a worm-wheel, thus pouring the iron into the spout which leads it to one of the vessels.

Before following the iron through the converting process, let us glance at the construction of the vessel, of which Figs. 6999 to 7001 are the simplest form. A vessel that will convert a 5-ton

charge is 8½ ft. in external diameter, and 15 ft. high. It is made chiefly of ½-in. to ¾-in. iron plates, and lined nearly a foot thick with refractory material. At one end it has an 18-in. opening, called the nose; at the other a tuyere-box *a*, Fig. 7001, communicating with the blowing engine. From the tuyere-box, twelve fire-brick tuyeres, each perforated with twelve ⅜-in. holes, project through and are imbedded in the lining. A tuyere is shown in section by Fig. 7003. These tuyeres last but six or eight heats, and are arranged so as to be rapidly renewed. The vessel is mounted on trunnions, and turned by a hydraulic cylinder, by means of a rack and pinion. When the charge enters, the tuyeres are turned up, Fig. 7000, so that the iron will not run into them. The blast is then admitted, and the tuyeres turned down so that the metal will flow over them and be pierced by the entering columns of air. The cubical contents of the vessel is eight to twelve times that of a charge of iron, in order to give room for ebullition. The vessel lining is heated red hot, and the fuel discharged before the iron is turned in.

The iron is now subjected to 120 streams of air, ⅜ in. in diameter, at 15 lbs. to 25 lbs. pressure, for about twenty minutes. Most of the silicon is first burned out, the result being slag, and a comparatively dull flame at the converter mouth. When the carbon begins to burn freely, the volume and brilliancy of the flame increase, and as the surging mass grows hotter, and boils over in splashes of fluid slag, the discharge is a thick, white, roaring, dazzling blaze, and the massive vessel and its iron foundations tremble under the violent ebullition.

Towards the close of the operation the flame becomes thinner, and when decarburization is complete, it suddenly contracts and loses illuminating power. The determination of this period is the critical point of the process. Ten seconds too much or too little blowing injures or spoils the product. At the proper instant, as determined best by the spectroscope, or by coloured glasses, but usually by the naked eye, the foreman turns down the vessel and shuts off the blast. The charge of melted spiegeleisen is then run in, when another flaming reaction occurs. The vessel being still further depressed, the steel runs into the ladle, pure, white and shining, from under its coating of red-hot slag. A blanket of slag, most useful in preserving its temperature, follows it into the ladle. The metal is now led into the ingot-moulds, by means which will be further illustrated. After the exterior surface of the steel has crystallized, the mould is removed, and the ingot is ready for reheating and rolling.

Having thus taken a general observation of the Bessemer plant and process, we are prepared to analyze the peculiar mechanical requirements, and the way in which they have been met.

This subject divides itself under two heads;—

1. The cardinal requirements upon which hinge the production of steel at all, whether fast or slowly, expensively or economically.

2. The mechanical refinements, upon which commercial success depends.

The first radical feature of the Bessemer apparatus was imbedding the tuyeres in the lining of the vessel; or, in other words, the perforation of the bottom part of the vessel lining. The bottoms of the tuyeres are luted with plastic clay, inserted in openings in the tuyere-box, grooved to hold the luting, so that no air can leak by, and held in place by a dog, Figs. 7002, 7003. Semi-plastic refractory material, chiefly ground silicious stone, is then rammed between and around the tuyeres, thus forming the continuous lining of the vessel.

This feature is essential to the maintenance of the tuyeres. It is obvious that a naked refractory tube, projecting into the molten metal, with iron and slag alternately wearing and chilling on all sides of it, is far more costly to construct, operate, and maintain than the mere end of a brick block lying flush with the lining, and that any apparatus to insert and withdraw a tuyere must be expensive and easily deranged by the heat and splashes, while the perforated bottom requires no moving apparatus additional to that which rotates the vessel. The perforated bottom, for the introduction of the blast beneath the iron and in numerous jets, is also essential to its violent and distributed agitation.

The second radical feature is the rotating vessel. A stationary vessel having similar tuyeres met with a very limited use at the introduction of the process; but as recarburization cannot be performed in such a vessel, and as it is otherwise impracticable for a maximum production, we may properly omit its consideration. We have already observed the value of the rotating vessel in placing the tuyeres under the metal to blow, in removing them to stop blowing, in receiving the iron from the cupolas, and in pouring the steel into the casting ladle. To assure ourselves of the simplicity and perfect adaptation of this means to these ends, we have only to try to imagine an inadequate substitute. If a tuyere fails while blowing, as is often the case, at the first indication, the perforated bottom is turned up out of the metal, where it can be reached and repaired. The defective tuyere is cut out, the hole is rammed full of moist clay and sand, and the blowing is resumed with the remaining tuyeres after five or ten minutes' delay. Three or four of these dummies are sometimes inserted without reducing the day's product. If the tuyere of a stationary vessel fails, the whole charge burns through the bottom, causing serious delay and loss.

The tuyere-box is an important part of this system. It forms a common blast reservoir for all the tuyeres, the air being brought to it from the regulator through the hollow trunnion of the vessel. By breaking a single joint, that is to say, by removing the tuyere-box cover, either of the tuyeres may be examined and removed.

One of the neatest of Bessemer's minor inventions is the air-space *c*, Fig. 7003, left between the top of the tuyere-box and the bottom of the vessel. If any blast leaks by a tuyere, it escapes into this passage instead of cutting a channel clear through the lining alongside the tuyere; or if a tuyere burns down too short, the sparks escaping through this air-space apprise the workman in time to turn down the vessel before serious damage is done.

The shape of the vessel is an important feature. The interior is well formed for resisting wear, for thorough agitation, and for the preservation of heat. The nose is equally convenient for charging and discharging the metal, and for discharging the gaseous products of combustion into the chimney. The angular position of the nose gives the vessel so large a capacity when lying on its

side, that the whole charge will lie in it without running either into the tuyeres or out of the nose. We can hardly see how the shape can be improved, or how any other would be admissible. In its general features it was the first, and as here presented it was the second vessel introduced by Bessemer.

The ladle-crane, Figs. 7004 to 7008, is another radical departure from the nearest kindred

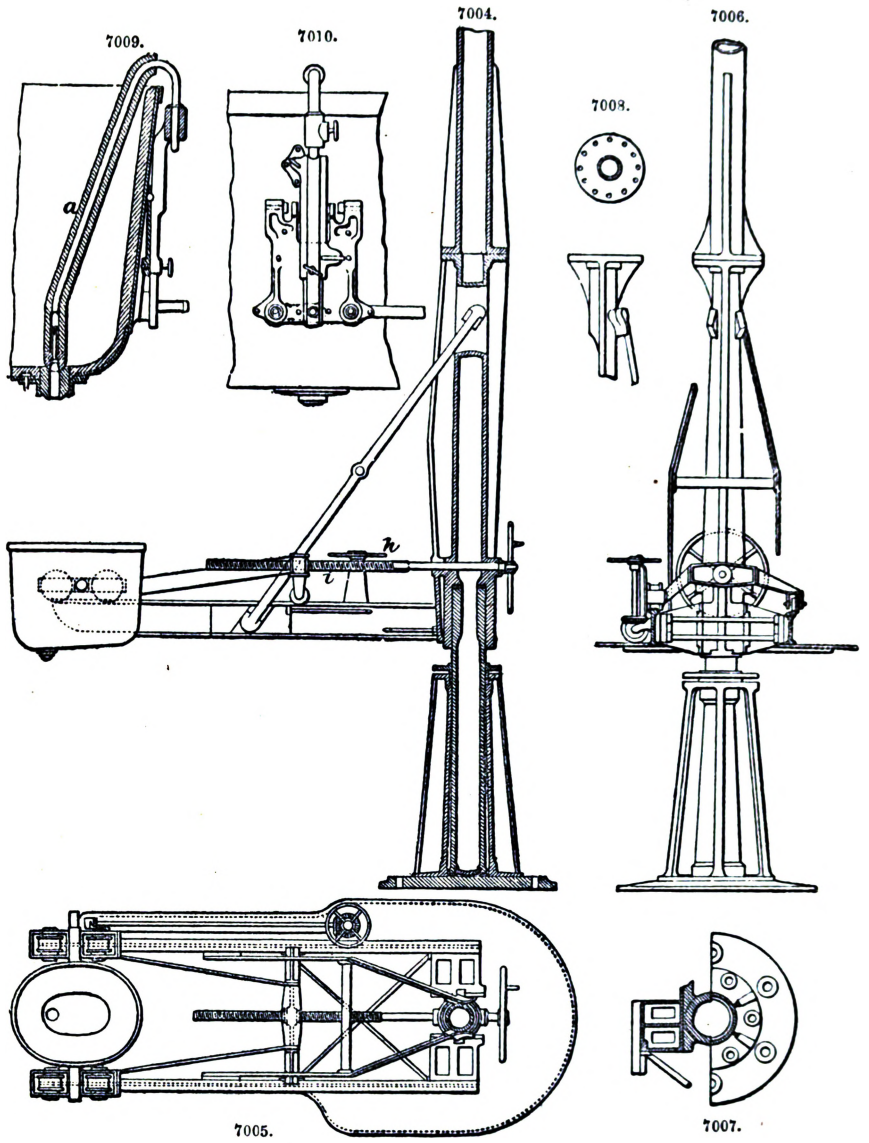

practice. The ladle, instead of swinging from a crane chain, as in a foundry, is rigidly held in a fixed orbit. This feature was original with Bessemer, and to it he added the old ladle with a pouring nozzle in its bottom, regulated by a movable stopper. This consists of a loam-coated rod *a*, Fig. 7009, armed at its lower end with a round-ended fire-brick or plumbago stopper, fitted to the concave top of a fire-brick nozzle. The stopper is raised and lowered by a lever *e*, Fig. 7010, in the hand of the workman. Thus the heavy steel is discharged pure, while the lighter slag and impurities are left at the top. Pouring steel into moulds over the rim of a ladle, as in foundries, would make excessive scrap from spilling and chilling, and is wholly impracticable. The vertical motion of the crane is necessary in pouring from the vessel, to keep the ladle close under the nose, thus preventing too great a fall of the stream and consequent slopping. The ladle is also tipped by a worm and worm-wheel *h*, Fig. 7004, to regulate the position of the nozzle over the moulds, and to turn over the ladle for heating and repairs.

The radial motion of the ladle, by means of a rack or a screw *i*, is necessary to adjust the stream vertically into moulds standing in different positions; and it is convenient in properly placing the ladle under the vessel's nose.

Again, the accurate adjusting of the stopper in the nozzle is effected by means of a hinged plate,

Figs. 7009, 7010, to which the stopper, slide, and lever are attached. These latter features are peculiarly American.

Figs. 7011 to 7015, the English ladle-crane. The ram has no top support. The jib revolves on friction-rollers, and the weight of the ladle is counterbalanced. The details of construction will be further referred to.

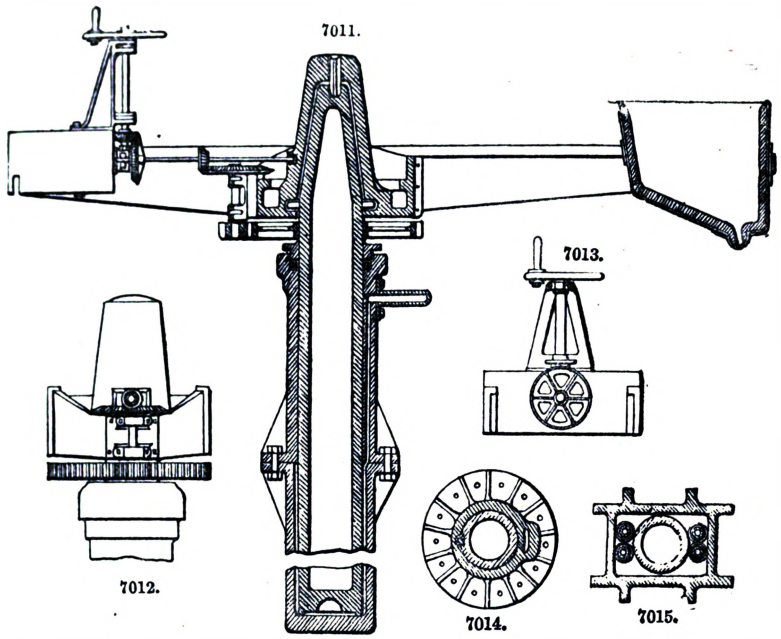

A very large and regular product is essential to commercial success in the manufacture of steel. The same engine and boiler capacity, the same vessels and accessories, the same quality and nearly the same extent of hydraulic machinery, melting apparatus, and buildings, are required to make six 5-ton heats a day as to make sixteen 5-ton heats a day. Six heats was the maximum work in England a few years ago, and still is in some foreign works, ten or twelve being the general average, while eighteen to twenty-four heats are the standard practice in America. This additional work, got out of nearly the same capital, is the result of these mechanical refinements.

In order to obtain with Bessemer machinery the maximum production, its strength and durability must be implicitly relied on. No weakness, irregularity, or inefficiency can be tolerated. The failure of one little part may involve a whole system of machinery in costly delays and extensive repairs.

Two vessels are simply indispensable. If a set of tuyeres will only endure four to six heats, and a new set, together with its section of vessel lining, must be put in, dried, and thoroughly heated before it can be used, it is easy to see that getting eighteen heats a day out of one vessel is beyond the present capacity of refractory materials.

A double blowing engine, that is to say, two engines connected, has usually been preferred, but is not indispensable to uniform blast. Two disconnected engines, however, as first used at the Cambria Steel Works, in Pennsylvania, each engine large and strong enough in an emergency to blow a heat, give the advantages of the double engine, and prevent delay in case one engine is disabled. Nor is this all. Merely blowing say twenty heats occupies but ten of the twenty-four hours, yet the engine must run ten or twelve hours besides this, at reduced speed and pressure, to heat the vessels. Using one of the disconnected engines, instead of the whole of a double engine, for this purpose, saves much steam and wear.

The pressure pump, for actuating the hydraulic machinery, is the heart of the Bessemer system. If the heart stops, trouble is serious and immediate. Two pressure pumps are deemed essential to maximum capacity. Two cranes are necessary to reach over the two vessels; three are indispensable to a product of 80 or 100 tons a day. Three cupolas are necessary to give time for the repairs of their linings, although but one is run at a time. Four are used in the latest plants. Two spiegel furnaces are employed for the same reason.

This and some further duplication of machinery is essential, not only to continuous working in case of breakdowns, but to the simultaneous conduct of manufacture and repairs.

It will have been observed that in handling melted iron and steel on this large scale—handling it so carefully as to prevent spilling, and so rapidly as to avoid chilling—requires not only strength of parts, but great steadiness and celerity in the operations, and absolute control of them by the workmen. This almost necessarily involves the use of hydraulic machinery. A steam hoist, a simple cylinder and piston, is wholly inapplicable, by reason of the elasticity, condensation, and consequent unsteadiness of the steam support. A steam hoist geared, to overcome this difficulty, is liable to be disabled by heat, splashes of slag and metal, and showers of sand. Nothing can be more simple and permanent than a massive hydraulic cylinder and ram. Water being practically unaltered in volume by any temperature or pressure to which it is here subjected, its motion can be

controlled with the utmost nicety, and its staying power, when placed, is like that of a cast-iron column.

The difficulty of repairing the refractory linings, especially the vessel's bottom, which lasts only four to eight heats, was for a long time the weak point of the Bessemer system.

The early method of setting tuyeres was knocking out the stump left from the denudation of the bottom, and inserting a new tuyere from the tuyere-box. The vessel being too hot to enter for twenty hours or more after a blow, for the purpose of filling and ramming the space around the tuyeres, this space could only be filled by pouring semi-fluid refractory material into the nose of the vessel, and letting it set as best it might by the evaporation of the water. The bottom was thus porous, and, unless long heated, it was damp. The constant breaking through of the steel was the result.

Bessemer then devised the duplicate bottom, Fig. 7016, consisting of a tuyere-box, tuyeres, and section of lining, previously rammed and dried. The old bottom, with its tuyere-box, was withdrawn bodily, and the new one inserted. This was a vast improvement; but still the annular space around the new bottom had to be filled with a semi-fluid material, just like the space around the individual tuyeres in the old practice; or else the vessel had to stand idle a long time to cool, so that a workman could enter it and ram the joint.

7018.

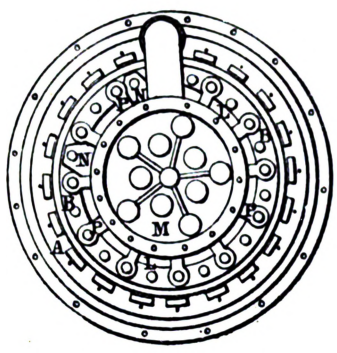

7017.

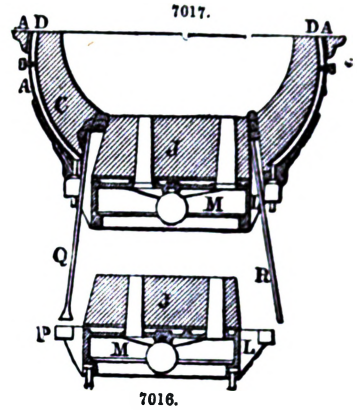

7016.

After a good deal of experimenting, the simple expedient was arrived at in America of so constructing the lower part of the vessel, as at D, Figs. 7017, 7018, that the annular space can be rammed from the outside with bricks or cakes of semi-plastic material. The method of inserting this filling, by means of the rammers Q, R, into the annular space K, between the new bottom and the vessel lining, is shown in Fig. 7017. The filling is then covered with the plates N, Fig. 7018, which are cottered on; after half-an-hour's heating the vessel is ready for use. A new, dry, and trustworthy bottom can now be made in two hours from the last blow on the old bottom, so that one vessel is always ready. Six interchangeable bottoms are employed for two vessels. This seems a small detail, but it has been the chief cause of raising the product of American works from ten and twelve to eighteen and twenty-four heats a day, and it has nearly done away with what was sometimes of daily occurrence in the old practice—the bursting through of the fluid metal, often so suddenly and on such a scale as to render temporary repairs impossible, so that the whole charge was made into scrap.

The lining of the vessel other than the bottom, with the best American refractory materials yet employed, endures 400 to 500 heats. The best English materials last twice as long.

The English vessel lining is a hard sandstone, called ganister. It contains about 93 per cent. of silica, 4 per cent. of alumina, 1 or 2 per cent. of oxide of iron, and often a little soda, lime, potash, and other substances. It is a true quartzite. This is ground into sand and dust, and mixed, sometimes, but not always, with a little fire-clay while being ground. It is then wetted to a semi-plastic consistency, and rammed into a solid wall, between an iron mould temporarily inserted and the shell of the vessel. The hardness and uniformity of the ramming is of special importance. The lining is at first slowly dried, and then glazed by half filling the vessel with coal, and blowing for four to five hours at 2-lb. to 3-lb. pressure. The vessel is then ready for use.

In the United States no stone exactly like ganister has yet been found. Any hard, dense sandstone, or any quartz, mixed with 10 or 12 per cent. of ground fire-clay, is used. The chemical composition of many of these stones is similar to that of ganister, except that they contain a little less alumina. The natural mixture of the small amount of alumina in ganister appears to give the mass a degree of density and cohesion, both wet and dry, that can hardly be obtained with three or four times the amount artificially mixed. Too much alumina is chemically eaten away; this is why tuyeres fail so soon. A fire-brick vessel lining, though hard enough to stand the abrasion of the surging mass, would be chemically destroyed in a very few heats. Silica, on the contrary, although refractory enough, is soon washed away, because it will not fuse into a dense mass. The mechanical structure of quartzite has an important bearing on its endurance when rammed into the vessel. The heat of successive charges compacts and hardens it.

In order to place the moulds in the vessel so that the lining material can be rammed around them, the vessel must be taken apart. In many works, the vessel is divided near the centre; each section is turned with its larger opening upward, and separately rammed. The two are then put together with a luting of fire-clay; the whole operation occupying thirty-six to forty-eight hours.

The American plan, just being introduced, is that of duplicate top, bottom, and nose sections, which are previously rammed and dried. The centre section, being more difficult of removal, on account of the trunnions, is rammed in its place. The time lost in lining is thus brought down to about twelve hours.

The regulator before referred to, Figs. 7019, 7020, is a raised platform F over the air and water distributing apparatus, standing upon which workmen can observe and regulate all the motions of the vessels and cranes. The necessity of concentrating these operations at a point out of reach of the working heats of the vessels, and the flying splashes in case of accident, will be obvious. The construction is explained by the drawing. The air-chamber A communicates with the blowing engine; the water and exhaust chambers C with the pressure pump. D, D, are the air-valves for admitting the blast to the vessels; E, E, the 3-way and 4-way valves, constructed like gas-cocks, for distributing the water pressure to the hydraulic cylinders. Their construction is shown by Figs. 7023, 7024. This is Bessemer's early regulator. A larger number of valves, and many improvements in detail, have been added.

7019.

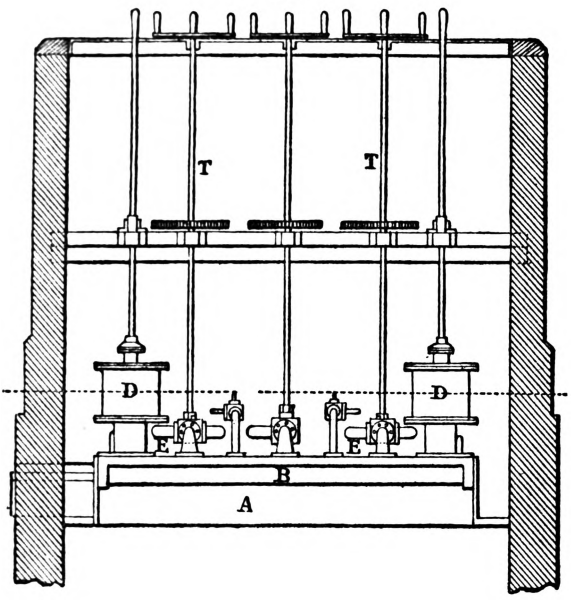

7020.

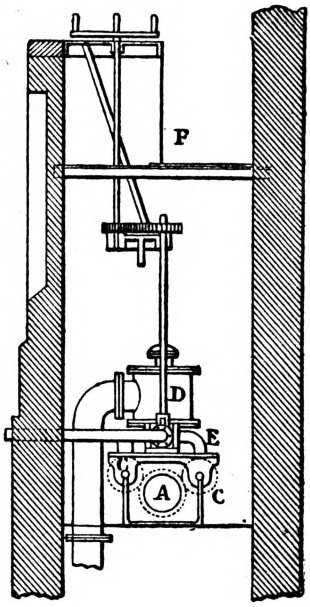

7021.

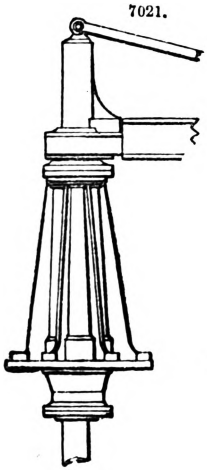

7022.

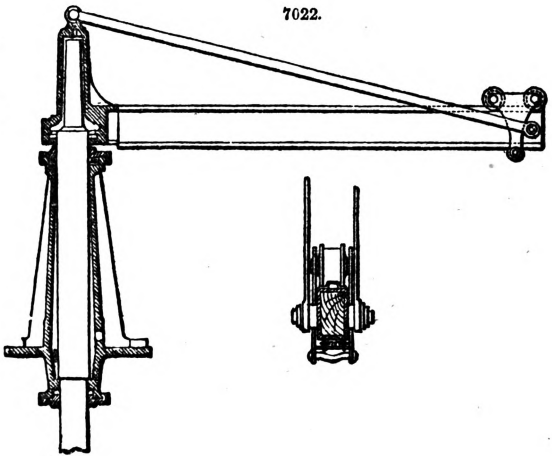

The English form of ingot-crane is illustrated by Figs. 7021, 7022. All hydraulic cranes used in Bessemer works consist of a vertically moving ram, to which a horizontal jib is attached. In ordinary cranes the jib does not move vertically, which is a serious comparative disadvantage, because all radial transference of the load must be done by racking the jib-carriage, from which the load is suspended, backwards and forwards by slow-moving gearing or pulleys. When a jib rises and falls, its carriage may be moved radially by simply pushing the load; the carriage runs on the jib, just like a car on a railway, unhampered by sheaves and chains. Bessemer's crane, Figs. 7021, 7022, consists of a cylinder containing a ram of two diameters, the smaller end passing through a bottom stuffing box, and the larger through an upper stuffing box. To the upper end the jib is attached.

The difference in cross-sectional area between the two ends of the ram is the area acted upon by the water to lift it. The lateral strain of the overhanging jib, on the upper end of the ram, is very great, requiring excessive strength; and its friction in the stuffing box is so severe that the ram often chatters in rising, and the jib can only be turned in its orbit by means of the independent head revolving on rollers. The foundation must be hollow to get at the lower stuffing box, and very solid and wide to keep the whole structure from tipping over.

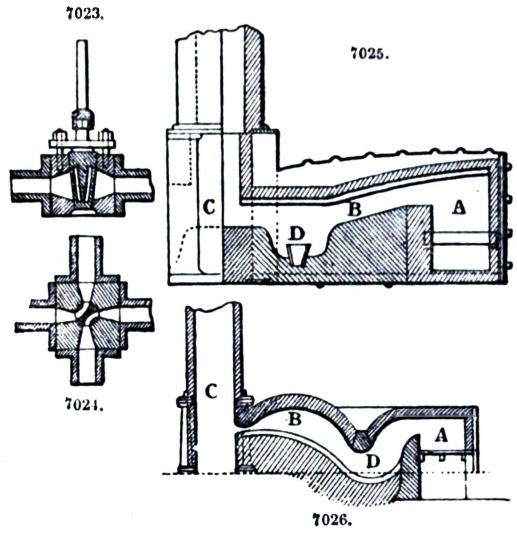

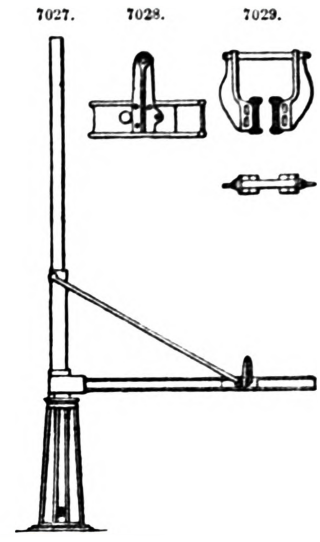

The crane generally used in American works, Figs. 7027 to 7029, consists of a cylinder, open at the top only, and requiring chiefly vertical support from the solid pier on which it rests. The ram passes through an upper stuffing box, and through a top support in the roof of the building. The jib is placed between these supports, so that the lateral strain on the ram is comparatively small. This is illustrated by the fact that no rollers are required; the ram turns in the stuffing box. The jib of an 8-ton crane can be pulled round its orbit by one hand. The ram is stepped upon a column of water which is substantially frictionless. The top support has proved itself convenient, and economical of power and repairs; and, after counting the cost of the supports in the roof, this system of cranes is less costly than Bessemer's system.

The amount of the hydraulic pressure employed has been regulated chiefly by the proportions of the crane; that is to say, it was found that for an 8-ton crane, having a 10-ft. lift and 22-ft. jib, a 13-in. ram was well proportioned for strength. Adding friction and fluctuations of pressure, it was found that 300 lbs. an inch on this 13-in. ram was abundant for all emergencies, and the working pressure has been fixed at about this point, instead of being carried to 1500 lbs. or more, as is so usual in other hydraulic machinery. The comparative durability of valves and packing under the low pressure is very great.

Hydraulic pressure is applied to the ordinary form of crane, and also to the lift for raising charges to the cupolas, by means of a simple cylinder, the piston-rod of which pulls a chain. The length of the lift may be made two, three, or more times that of the piston, by interposing pulleys, that is to say, the ordinary block and fall reversed.

The 4-way cock, Figs. 7023, 7024, that distributes the water to the lift-cylinder, is actuated by a hand-chain within convenient reach of the workmen on the various floors. The advantages of this lift over any geared or belted lift, unless complicated by brakes, are, first, that it cannot overrun. When the cage is as high as it should go, the piston is at the end of the cylinder, and can go no farther. Secondly, the control of the rate and extent of motion is much better, as it consists in partly or wholly closing a cock, instead of wholly shifting a belt. Thirdly, the repairs of such a lift, properly constructed, are hardly appreciable, compared with the maintenance of belts and numerous and rapidly moving parts.

The important features of the Worthington duplex pressure-pump are generally illustrated by Figs. 7030, 7031. The duplex system, the movement of the steam-valve of one engine by the piston of the other engine, permits the water-pistons to stop, momentarily, at the ends of their stroke, thus allowing the water-valves time to seat without slamming. This feature also causes uniformity of pressure, and the absence of the fly-wheel gives the pump all the other advantages of the Cornish engine.

Each water-engine, instead of being a cylinder bored from end to end and fitted with a piston, consists of two separate cylinders, bored in the throat only, and fitted with two plungers, connected together. A stuffing box around a plunger is much more easily kept tight than the packing of a piston, especially when the latter has a variable stroke and tends to wear and enlarge the middle of the cylinder, particularly at the bottom, where sediment collects.

The water is pumped into an accumulator, consisting of a cylinder and weighted ram like those of a crane. When the cylinder is full, it nearly shuts off the steam from the pump by means of a lever and throttle-valve. This arrangement saves some steam, and prevents the pump from running too fast when several cranes happen to be started at once.

Safety-valves for pressure and feed pumps are abandoned, it having been found better to make the parts strong enough to resist the full force of the steam. When the water exit is shut off, the

7030.

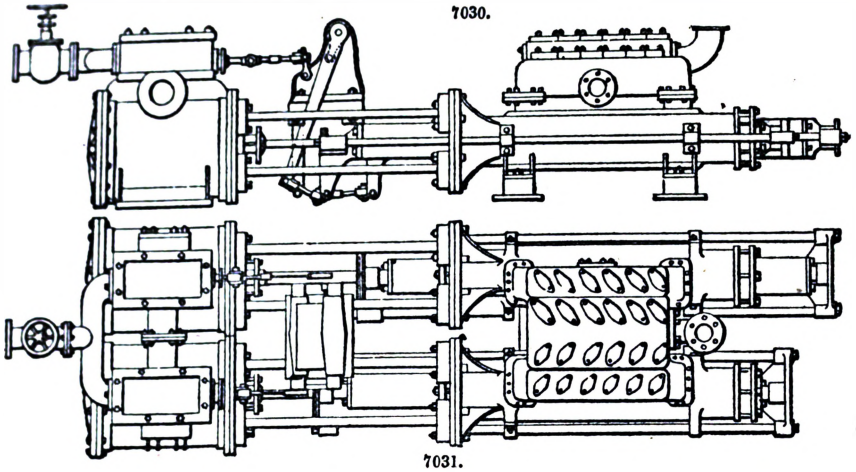

7031.

pump simply stops, under pressure. The packings heretofore employed for the glands and pistons of hydraulic machinery have been leather cups, which are not very durable, and, when large, are quite costly. The Martin packing, consisting of a roll of hemp-tape forming a continuous ring, and covered with wire cloth on the wearing surface, has been lately adopted, with excellent results.

In the melting department some interesting and important changes have been made. The reverberatory furnace was, until recently, employed for melting the principal charge, and is still used in the United States for the spiegeleisen charge; because, as this is small and often has to be held for some time after melting, the flame of the reverberatory constantly playing over it prevents its chilling. The very oxidizable manganese in the spiegeleisen is also more affected by the blast of the cupola than by the comparatively neutral flame of the reverberatory.

In the older form of air-furnace, Fig. 7025, the flame and any free air it may contain are drawn from the fire-box A along the roof of the furnace, and do not come into very direct contact with the metal lying at B; hence this form is best employed for melting the spiegeleisen. Fig. 7026 shows a later form of furnace, which melts faster because the flame is thrown directly upon the metal lying at B; but it also oxidizes the metal more rapidly. It was first employed for melting the principal charge, but as it required three hours and 2½ tons of coal to bring down 5 tons of iron, it was early abandoned for the cupola, which melts a 6-ton charge in less than one hour with 1 ton of coal.

Adapting the cupola to the Bessemer manufacture has, however, required some costly experimenting. What was considered the best foundry cupola—MacKensie's, Fig. 7032—was first employed; but it would only melt 20 or 30 tons. The shallow bottom then filled with slag, which choked the tuyeres and scaffolded above them. The present cupola, Fig. 7033, melts 100 tons in eighteen to twenty hours.

7032. 7033.

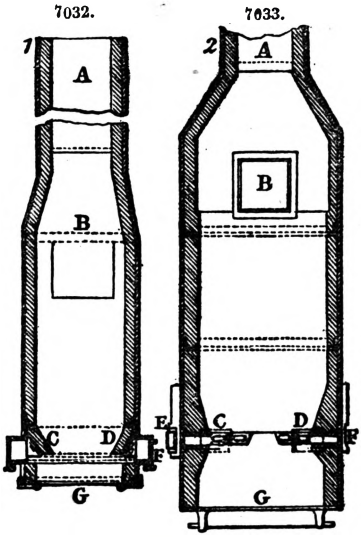

The foundry cupola is made large enough to melt what is required in two or three hours; the hearth is left shallow to take the least amount of fuel, for the bed of coal must reach above the tuyeres, however little iron is melted. And the day's work is over before slag accumulates to any embarrassing extent. But the Bessemer cupola must deliver 6 tons an hour, at the highest attainable temperature, for a whole day and night. There must be a deep hearth or receptacle for slag under the tuyeres, and an upper tapping hole by which the slag may be worked off as in a blast furnace. The tuyere area must be excessively large to ensure ample air admission in case of partial chilling at any point; and the size, shape, and arrangement of tuyeres must be such that they can be conveniently got at, cleaned, and changed without stopping the operation.

A cupola for a 5-ton plant is of 5 ft. internal diameter and 14 ft. high; it has six oval tuyeres of 5 and 8 in. diameter. The boshes, so prominent in the MacKensie cupola, are reduced to prevent scaffolding. The MacKensie annular tuyere, however valuable in foundry practice, is not adapted to long-continued heats, because it cannot be conveniently cleaned from without, while working.

After the last charge is tapped out, the Bessemer cupola bottom is dropped, in the usual manner, to discharge the remaining débris. The most trustworthy cupola blower for the pressure here required, not less than 1 lb. an inch, is undoubtedly a light reciprocating engine, like a blast-furnace blowing engine. To give the required volume, 6000 cub. ft. a minute, such an engine is

rather costly. After much unsatisfactory experimenting with rotary pressure blowers, several American works have adopted the comparatively cheap Sturtevant high-speed fan-blower, with marked success.

Interposing ladles between the cupolas and vessels is important in many respects. The cupola cannot be so economically and regularly worked if its hearth has to fill up with the whole 12,000-lb. charge of iron every hour. The weight of the charges should be somewhat uniform, to promote uniformity and accuracy of blowing and to recarburize with a fixed percentage of spiegeleisen. This can only be accomplished by weighing the charge between the cupola and the vessel; and the ladles are placed on scales for this purpose. Several charges are often run into the ladles when the converting department is not ready for them, otherwise the cupola would have to be dumped, and part of a day's work lost.

Bessemer Process in England.—The iron almost exclusively employed in England for this process is obtained from the Cumberland district, and is derived from red hematite ores. The analysis of specimens of these ores is given at p. 2034.

The fuel used at the blast furnaces in the Cumberland district is the best Newcastle coke, which is remarkable for its hardness and freedom from sulphur. The percentage of sulphur is about 0·8, and of ash 4·45. No charcoal pig is made in England for the Bessemer process. The fluxes employed are a limestone quite free from phosphorus, and a portion of black shale from the coal beds, consisting of clay and carbonaceous matter without any appreciable amount of sulphur. The ores are not calcined. As it is necessary that the iron should be as grey as possible, not less than 30 cwt. of coke are used to each ton of iron produced.

Forest of Dean iron, made from brown hematite ores, is frequently used in small quantities in admixture with other irons for the purpose of maintaining the heat of the charge, which it tends to do. It is apt, however, to contain too large a percentage of sulphur to work well alone.

Another brand which is said to work well is Weardale, an iron made from spathic ores. It is unusually rich in manganese, and owes its excellence chiefly to that fact.

The pig iron used in the Bessemer process requires to be carefully selected; it has been stated, on authority, that the carbon in it should not be less than 3 per cent., silicon from 1 to 2 per cent., manganese not more than 3 per cent., and sulphur and phosphorus are limited to ·05 per cent.

The following analyses exhibit the characteristics of some of the more usual brands of iron employed;—

	Cleator.	Workington.	Weardale.	Forest of Dean.
Carbon (graphitic) ..	4·007	3·14	3·24	3·25
Silicon	1·752	3·12	1·80	1·36
Sulphur	..	0·05	0·04	0·037
Phosphorus	0·049	0·03	0·19	..
Manganese	..	0·02	1·45	..

The presence of silicon in the iron causes the charge to work hot in the converter, and it is usual therefore to mix an iron rich in this element with others containing a less quantity, and which have a tendency to work cold and become pasty. As a rule, Workington iron contains more silicon than any other in use for the process, and being moreover an excellent iron is largely used. It is, however, from the very fact of its working so hot, seldom employed alone, as it cuts the moulds badly in pouring.

Sulphur and phosphorus are the most injurious elements found in the pig, because the Bessemer process is powerless to remove them, and the quality of the steel is materially affected by their presence. An effectual means of eliminating these substances, in the process of conversion, would be a most valuable discovery.

It is usual among all the steel makers to mix several different brands of iron where a uniform and good quality of steel is desired, but there seems to be no definite mixture which is agreed upon as best. The principle appears to be to form the larger portion of the charge of the better brands of Cumberland hematite, and to add as correctives smaller percentages of other irons. The following will serve as examples;—

I.		II.	
Workington	45	Cleator	40
Harrington	40	Workington	20
West Cumberland	10	Harrington (No. 1)	15
Wigan	20	Harrington (No. 2)	5
Weardale	7	Forest of Dean	10
Forest of Dean	3	Wigan	3
	120		93
Spiegel	7½		
	127½	Spiegel	6¾ or 6½

For forgings, such as axles, tires, or locomotive crank-shafts, none but No. 1 iron is commonly used, but for rails a greater or less amount of No. 2 is added, in order to reduce the cost as far as possible. The amount of this quality that may be used will of course depend on the character of the iron.

The percentage of manganese in the spiegeleisen should be equal to about twice the amount of carbon, the former having the effect of deoxidizing should the metal have blown rather to much.

It is important also to use a small quantity of flux, such as aluminous ore, limestone, or lime and broken fire-brick, in order to get a good fusible slag, otherwise *shots* of steel are suspended in the slag and lost.

The iron as a rule is melted in reverberatory furnaces, but at some works cupolas have been substituted with apparently good results. Where cupolas are used, much greater care has to be exercised in the selection of the coke, as fuel which might be used in the air furnaces would destroy the quality of the iron if burned in contact with it. The opinion among those who employ the cupolas is, that it is quite possible to find a coke sufficiently free from sulphur to yield a satisfactory result. At the Barrow works, preparations had been made to convey the molten metal directly from the blast furnaces to the converters, but after a number of trials it was found that the uniformity of the metal could not be relied on, and, in consequence, the attempt was abandoned, and cupolas erected instead, to remelt the pigs. The converters at the majority of the works have a capacity adequate for a yield of 5 tons of steel, or allowing one-sixth for waste, which may be taken as a fair average, for 6 tons of molten iron. The material commonly employed for lining the vessels is ganister, a highly silicious substance, found at Sheffield. Other materials have been tried at some works, as, for example, at Dowlais, with apparently great success. A pair of vessels, at the works just mentioned, had, in 1868, stood 300 blows each, without relining, and were still apparently in good condition. This is much above the average endurance of the refractory linings.

The sizes of ingots most commonly cast are, for rails, about 10 in. square; for locomotive crank-shafts, ingots of a rectangular section, say 22 in. × 16 in.; and for other forgings, according to the size and nature of the work, the moulds having a weight about equal to that of the ingots. At some works the plan is adopted of testing a sample of each blow for carbon, and classifying the metal according to the result of this test. By this means much greater uniformity in the finished work is obtained, and in the present state of our knowledge of the process, this is a very necessary means to secure this end, and should be more generally adopted. The process employed was introduced from Sweden, and is exceedingly simple in its nature. It consists in dissolving a known weight of metal, in the form of drill chips, or some other finely-divided state, in nitric acid, of the gravity 1·2. The solution will have a brown colour, more or less deep, according to the percentage of carbon contained in the metal. A standard colour, corresponding to a known percentage of carbon, as determined by direct analysis, is first established, and the colour of the solution to be tested is made to agree exactly with this by the addition of a certain quantity of acid or water. That this, which is the readiest method of producing agreement, may be employed, the colour of the standard solution must be light. The water is added to the solution in a graduated test-tube, so that the exact proportion of water relatively to the original solution may be read off with ease; and if, for example, an equal bulk of water requires to be added to make the colour the same as the standard, the percentage of carbon in the specimen under test must be just double that of the standard. As a solution of steel in acid would in the course of time change its colour, an exact imitation of it is made by dissolving burnt sugar, and this is kept hermetically sealed for comparison. To secure a light standard colour, it is not necessary that the piece of steel dissolved should contain a small percentage of carbon; but a larger quantity of acid may be used in a known proportion, say twice or three times the required amount, and the corresponding percentage of carbon will be equally well ascertained. This test is easily and quickly applied, and the variation of colour being considerable, gives results sufficiently accurate for the purpose of a proper classification of the ingots, according to the purposes for which they are suited.

The principal uses to which the Bessemer metal is put in England are the manufacture of rails, tires, axles, machinery forgings, and boiler-plate.

Cast Steel.—For the manufacture of cast steel, bars of blistered steel which are highly carbonized are broken into small pieces, melted in a crucible, cast in an iron mould, and form cast steel. The form of the pots or crucibles is long and narrow, and they usually contain 30 or 40 lbs. of metal. Pots are manufactured of fire-clay mixed with coke, or anthracite dust, or plumbago. An ordinary clay pot will last for one day, or three heats.

Where the steel-pots are made of fire-clay and upon the works, the pot-flask or mould, and plug, are commonly of the form Figs. 7035, 7036. The pot-mould is of cast iron, with two ears cast upon it to lift it by. Its inside is the shape of the outside of the pots; it is turned smooth, and is open at the bottom as well as at the top. There is a loose bottom made to fit, but not so small as to pass through; this has a hole in the centre ¾ in. in diameter. When in use, it stands upon a low post firmly fixed in the ground, which has also a hole 5 or 6 in. deep in its centre. The plug which forms the inside of the pot is of lignum-vitæ; it has an iron centre, which projects through it about 5 in., corresponding in size with the hole at the bottom of the mould. The clay for each pot weighs about 24 lbs.; it is moulded upon a strong bench into a short cylinder, and the inside of the mould having been well oiled, the clay is dropped into it, and the plug, also oiled, forced into the clay, while the projection finds the hole in the loose bottom in the centre of the mould, which guides the plug. The plug is driven down 2 or 3 in. by the blows of a heavy mallet on the top of the iron head; it is then taken out, to be oiled again, by putting a piece of round iron through the hole in the iron head to lift by, giving it, at the same time, a screwing motion. It is then driven by the mallet, while the clay, rising up between the plug and the mould, reaches the top. The clay is cut even with the top of the mould with a knife, and the plug taken out; the pot is then narrowed at the top by passing the knife round between it and the flask or mould several times, holding it inclined towards its centre. The mould is now taken and set with its loose bottom upon a small post fixed in the floor, and the mould gently allowed

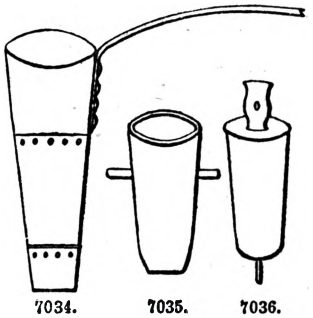

7034. 7035. 7036.

to rest upon it. This pushes up the bottom with the pot upon it; and the hole being filled with a bit of clay, the pot is finished. When the pots are sufficiently hard to bear handling, they are placed to dry upon rows of shelves, against the flues in the furnace.

The form of the melting furnace, and the direction of the fire and flue, will be understood from Figs 7037 to 7039. Fig. 7038 is a section of a ten-hole melting furnace, showing the direction of the

7037.

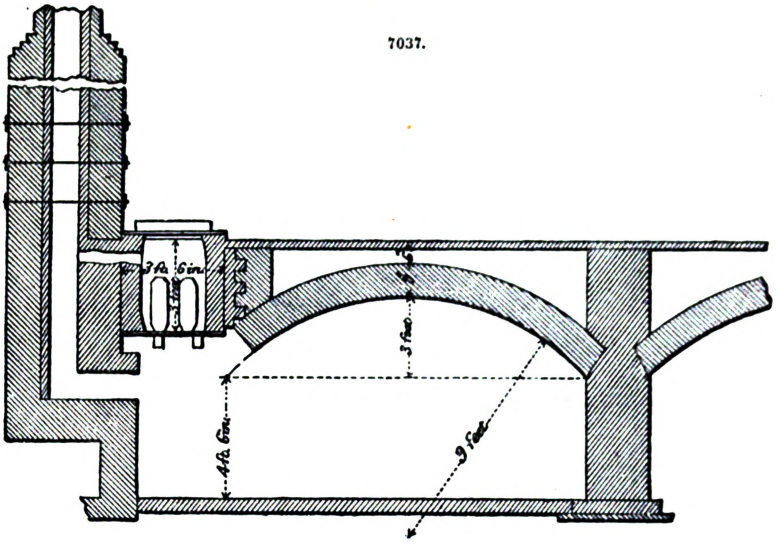

7038.

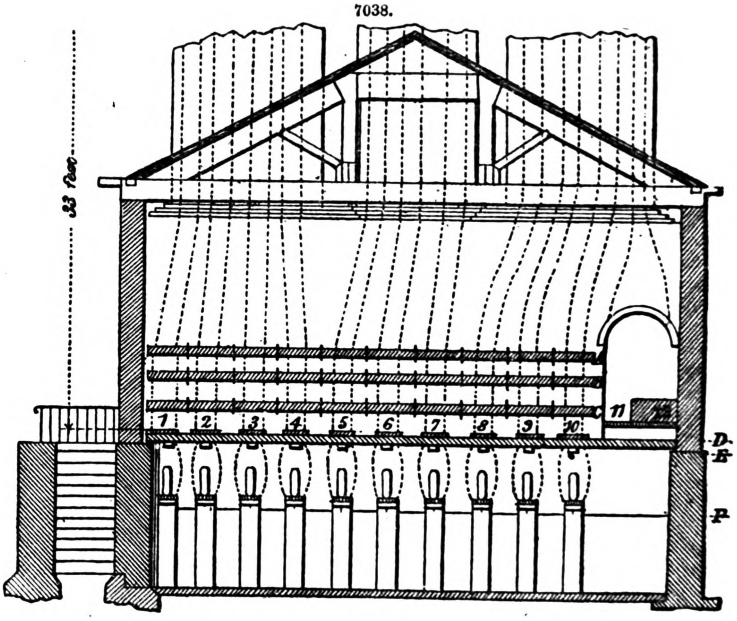

flues and the form of the holes when about half worn, with one row of the pots in their places; 1 to 10 are the flues of the melting holes, each one of which is carried up separately, and lined with fire-brick to the top; 11, an open fire-grate; 12, the annealing grate, closed in front by a cast-metal plate, rather broader than the depth of the melting pots; A, B, C, three broad bars of iron, bolted to others at the back of the flues by cross-bars, to tie the chimney-stack firmly together.

When the furnaces or holes become so wide as to waste the coke, the whole materials of the old melting holes—represented on the cross-section, Fig 7037, as occupying a space of 3 ft. 6 in., by 3 ft. 3 in.—are taken out, and new ones built of a kind of natural faced fire-stone like flags from 2 to 4 in. thick, cut into pieces 7 or 8 in. broad. These usually last four or five weeks before they want removing.

The cross-section, Fig. 7037, shows the position in which the two pots stand in the hole, and the cover in its usual position.

The cover-frame, Fig. 7040, is made of wrought iron 3 in. broad, by $\frac{3}{4}$ in. thick. A large fire-brick, made to fit, is held in its place by the movable bar of iron being pressed against it by

two screws. The handle is of round iron, about 16 in. long. The furnace tops, Fig. 7041, upon which the covers rest, are of cast iron, an inch thick, cast in two parts. The plan, Fig. 7039, is a

7039.

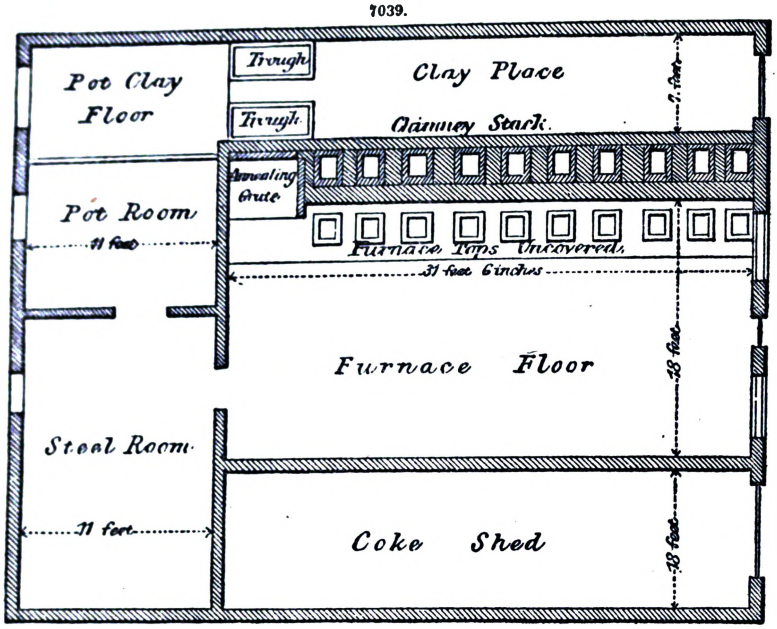

7040.

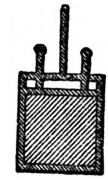

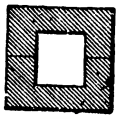

7041.

common arrangement of the other rooms connected with a melting furnace. The two troughs in the clay-place are for melting the clay previously to tempering it.

Instead of fire-stone, ganister is often used in England for furnace linings. In this case, wooden moulds are employed of the form of the furnaces; and the ground ganister, moistened with water, is put round the mould, which is then drawn out. This kind of stone is found in irregular masses, usually with fire-clay and carboniferous shale.

The preparations for melting the steel are commenced by making a coal fire upon the grate adjoining the annealing grate. The annealing grate must be large enough to hold twice as many pots as there are melting holes in the furnace. If that number be ten, twenty pots are put inverted upon the annealing grate, and the fire put down the spaces between them, which are then to be filled up, so as to cover the pot with the small coke riddled from among the coke used for melting, and upon these again the pot-lids are laid. This is done in order to have the pots gently heated to a red heat, ready for using. Each pot requires a stand and a lid. In form, the stand is the frustum of a cone about 3 in. high; and as upon the base of the stand the pot is to rest, they should correspond in size. The stand is made of common fire-clay, but the lid of clay the same as the pot; it should be a little larger in diameter, flat on the under side, and a little convex on the upper. Each furnace has two stands placed in the proper position upon the grate-bars; and upon the stands two pots, covered with their lids, from the annealing grate. Some fire, with a little coal, and soon after some coke, is put on; and when this has burnt up, sufficient coke to cover the pots; when the furnace and pots are at a white heat, the steel may be put in. The steel having been broken and selected for the intended purpose, weighing say 34 lbs. for each pot, is put into pans of iron or upon steel plates. To charge a pot, the lid is taken off, and the lower end of a conical-shaped charger, Fig. 7034, placed over the pot, down which the steel is gently slid. The lid is then replaced, and the other pot being charged in the same manner, the furnace is filled with coke, and covered. Afterwards more coke is added, the quantity being determined by the experience of the steel maker.

7042. 7043. 7044.

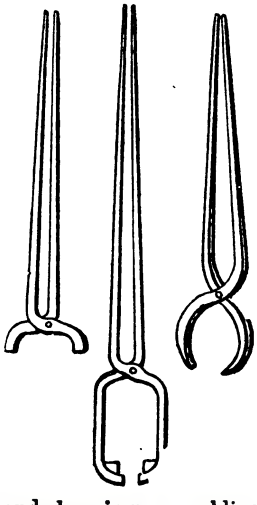

Four hours will finish the heat, when a man removes the crucible, by means of basket-tongs, from the fire, and puts it on the floor. Another workman takes he pot and pours the metal into the mould. Meanwhile the furnace is cleared of clinkers and made ready to receive the hot pot when emtied into the mould.

The ingots thus manufactured are drawn under hammers into the desired forms of bars A brown-red heat only can be applied to this steel without breaking it; it requires, therefore, a great deal of heating and hammering. This steel cannot be fagoted, and is welded to iron with difficulty. It may be united with wrought iron in casting it on hot and clean iron, or welding it by means of fluxes, such as borax, or prussiate of potash.

Before the steel is well melted, it appears to be in a state of ebullition; but when it is ready for pouring it has a clear surface, and rests in the pot without motion.

Figs. 7042 to 7044 are of several forms of tongs for lifting the pots for pouring.

Cast steel is largely manufactured, and for some purposes is preferred to all other kinds of steel, notwithstanding the larger quantities and cheaper rates at which these are produced.

A considerable quantity of a kind of natural steel is produced from pig iron by working it in a puddling furnace in a peculiar manner. Fig. 7045 is a section of a steel-puddling furnace.

7045.

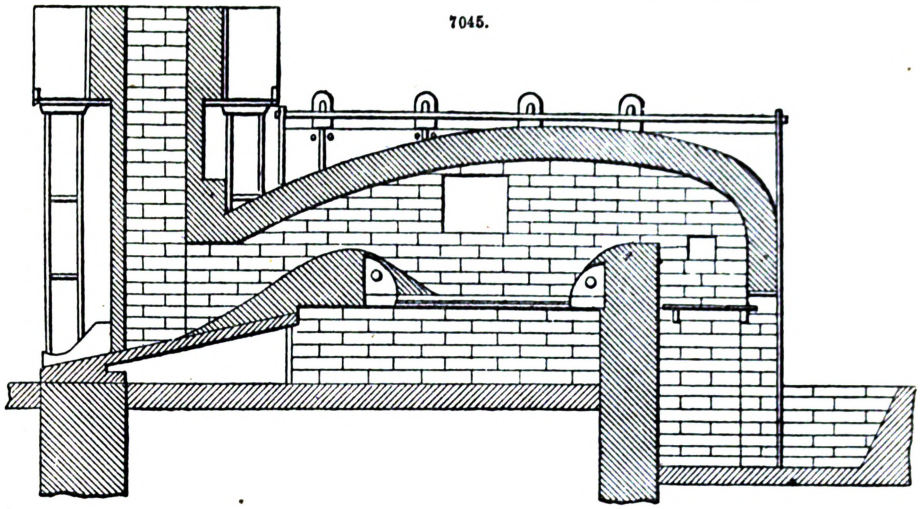

A charge of about 280 lbs. of pig iron is introduced into the furnace, and the temperature raised to redness. As soon as the metal begins to fuse and trickle down in a fluid state, the damper is partially closed, in order to temper the heat. From twelve to sixteen shovelfuls of iron cinder, from the rolls or squeezers, are added, and the whole is uniformly melted down. The mass is then to be puddled with the addition of a little black oxide of manganese, common salt, and dry clay, previously ground together. After this mixture has acted for some minutes, the damper is fully opened, when about 40 lbs. of pig iron are put into the furnace, near the fire-bridge, upon elevated beds of cinder prepared for that purpose. When this pig iron begins to trickle down, and the mass on the bottom of the surface begins to boil and throw out blue jets of flame, the pig iron is raked into the boiling mass, and the whole is then well mixed together. The mass soon begins to swell up, and the small grains begin to form in it and break through the melted cinder on the surface. As soon as the grains appear, the damper is three-quarters shut, and the process closely inspected while the mass is being puddled to and fro beneath the covering layer of cinder. During the whole of this process the heat should not be raised above cherry redness, or the welding heat of shear steel. The blue jets of flame gradually disappear, while the formation of grains continues; these grains very soon begin to fuse together, so that the mass becomes waxy and cherry red. If these precautions are not observed the mass will pass more or less into iron, and no uniform steel product can be obtained. As soon as the mass is finished so far, the fire is stirred to keep up the necessary heat for the succeeding operation, the damper is entirely shut and part of the mass is collected into a ball, the remainder being always kept covered with cinder slack. This ball is brought under the hammer and then worked into bars. The same process is continued until the whole is worked into bars. When pig iron made from sparry iron ore, or mixtures of it with other pig iron, is used, only 20 lbs. of the pig iron are added at the later period of the process, instead of about 40 lbs.

Siemens' Furnaces.—Fig. 7046 is a longitudinal section, Fig. 7047 a sectional plan, and Figs. 7048, 7049, transverse sections of a Siemens' furnace applicable to heating steel. The furnace consists of the heated chamber A, and of two fire-places or solid hearths B and C, communicating respectively with the two regenerators D and E. The valve F consists of a rectangular box of iron open at the two sides to the two regenerators D and E, at the bottom to the atmosphere, and at the top to the chimney G. A spindle passes through the centre of the two remaining close sides of the box,

7046.

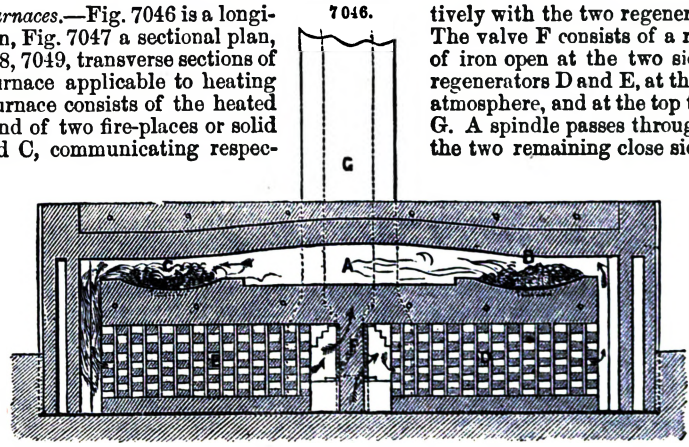

and carries a rectangular flap, fitting the box sideways, and bearing against one of its upper and one of its lower edges, according to the position of the tumbling lever and weight H, which are

fixed upon the spindle outside. atmospheric air entering from through the regulator D over C, through the regenerator E and by the valve F, into the chimney G.

A fire having been lighted upon the hearth B, through the side opening K, the flame passes through the furnace and through the regenerator E to the chimney G, heating on its passage the perforated walls. After working an hour the valve F is reversed, fuel supplied through the opening L to the second fire-place C, which is then operated upon in an opposite direction to that indicated by the arrows. It is evident that by a continuation of the process an

When the valve is in the position shown dotted in Fig. 7046, the below proceeds in the direction indicated by the arrows, passing the fire-place B, through the heated chamber A over the fire-place

7047.

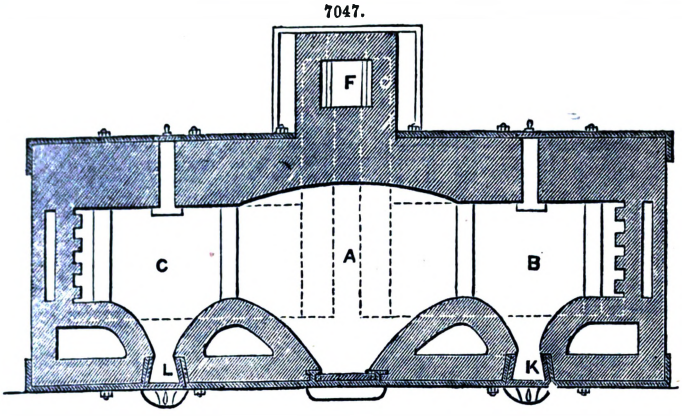

7048.

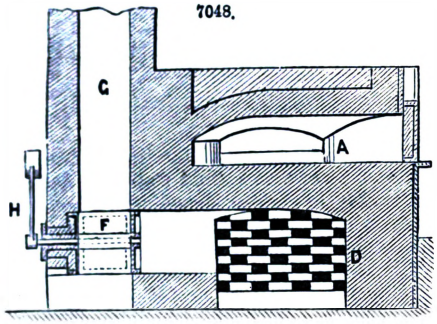

7049.

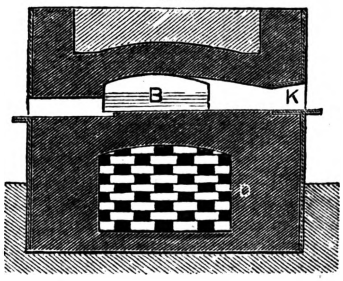

accumulation of heat to any degree may be produced within the furnace, provided only the heat produced in combustion is greater than the heat lost by radiation and the heat absorbed by the metal in the heating chamber. Modifications of Siemens' furnace are largely employed for making cast steel, and also in the production of steel by fusing pig iron with wrought iron upon the open hearth, known as the Siemens-Martin process.

See CRUCIBLE. FOUNDING AND CASTING. IRON.

Works relating to the subject;—Mushet (D.), 'Papers on Iron and Steel,' royal 8vo, 1840. Percy (Dr. J.), 'Iron and Steel,' 8vo, 1864. Crookes and Röhrig's 'Metallurgy,' vol. iii., "Steel," 8vo, 1870. Grüner (M. L.), 'The Manufacture of Steel,' translated by Lenox Smith, 8vo, 1872. 'Journal of Iron and Steel,' 1871–73. Overman (F.), 'The Manufacture of Steel,' crown 8vo, Philadelphia, 1873. Dessoye (J. B.), 'Guide Pratique de l'Acier ses propriétés,' 12mo, Paris. Landrin (H. C.), 'Traité de l'Acier,' 12mo, Paris.

STEP. FR., *Crassandine*; GER., *Fusslager*; ITAL., *Cuscinetto inferiore*; SPAN., *Rebajo.*

In machinery, a *step* is a kind of bearing in which the lower extremity of a spindle or a vertical shaft revolves.

STIRRUP. FR., *Etrier*; GER., *Springropp*; ITAL., *Staffa*; SPAN., *Estribo.*

Any part of a machine resembling in shape or in functions the stirrup of a saddle, is called the *stirrup.*

STONE. FR., *Pierre*; GER., *Stein*; ITAL., *Pietra*; SPAN., *Piedra.*

See CONSTRUCTION. MASONRY.

STOVE. FR., *Poêle*; GER., *Ofen*; ITAL., *Stufa*; SPAN., *Estufa.*

See IRON.

STRAP. FR., *Lien*; GER., *Band*; ITAL., *Collare*; SPAN., *Abrazadera.*

A *strap* is a band or strip of metal, usually curved to clasp or hold other parts; as a beam-strap, a spring strap; especially the U-shaped part of a strap-head which clasps and holds the brasses. The *strap-head* is a journal-box formed at the head of a connecting rod; see Fig. 2361, p. 1194.

STROKE. FR., *Course*; GER., *Hub*; ITAL., *Corsa*; SPAN., *Arcera.*

The *stroke* is the entire movement of the piston of a steam-engine from one end to the other of the cylinder. The respective strokes are distinguished as *up* and *down* strokes, or *front* and *back* strokes, the front stroke being towards the cross-head. In the United States, the stroke of a locomotive piston towards the front of the engine is called the front stroke. The term is also applied to the movement of the cross-head and other parts moving with the piston. The movement of a slide-valve is called its *travel* or *throw*. The movement of a crank or an eccentric is called its throw.

SUGAR-MILL. FR., *Moulin à sucre*; GER., *Zuckermühle*; ITAL., *Laminatojo da canne di zucchero*; SPAN., *Molino de azúcar.*

The machinery employed in the manufacture of sugar may be divided into that used for extracting the juice; for clarification, or separating the pure liquor from extraneous and deleterious substances; for evaporation, or driving off the water which holds the sugar in solution; and for

curing, which includes the processes of drying, and, when required, of bleaching the sugar obtained by evaporation.

The chief sources of sugar are the sugar-cane and beet-root. Of these the sugar-cane is the more important, and we shall therefore confine our remarks to the extraction of juice from the cane. The cane, when fully grown, ought to be about 8 ft. high, and 1½ in. diameter in the stem, with a top of 3 or 4 ft. above. The stem consists of a core full of sweet juice—in fact, nothing but sugar and water—surrounded by hard, woody fibre, which is again encased in a coating of silica, and it is these outer casings that occasion trouble in properly expressing the juice.

A common method of obtaining the juice, and one still used in rough countries, to pass the cane between two vertical rollers of hard wood, set in a strong wooden framework and driven by cattle; the three-roller horizontal mill is, however, now almost universally employed in expressing cane-juice.

Before the use of iron became general, a simple system of framing, Figs. 7050, 7051, consisting

7050.

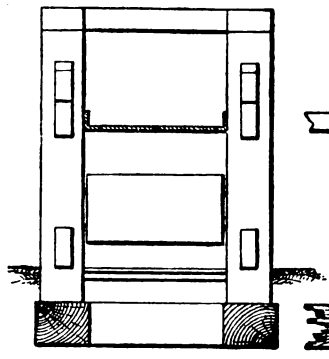

7051.

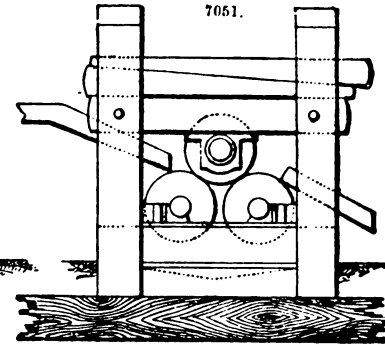

almost entirely of timber, was much adopted. The wood used is of the hardest description, generally obtained from the bullet, or bully, tree, which is somewhat similar but superior to teak. The framing is very massive, timber of about 16 in. square being used for a mill with rollers 4 ft. long by 2 ft. in diameter, and mortised and pinned together as firmly as possible. The only ironwork requisite consists of two light side-frames upon which the metal bearings are fitted, and which also carry the dumb returner. The advantages of this description of framing are;—That it can be made in the country; that the cast-iron portion has very little strain upon it, and therefore is not liable to break; it is economical, as good timber can usually be obtained at a moderate distance, and although skilled labour is dear, the expense of carriage is saved, and it can be repaired easily, which we consider the chief recommendation for wood framings. When properly constructed, the weakest portion consists of the two wedges above the bearings of the top roller, so that in case of any hard substance being passed between the rollers, the only damage done would be the straining, and perhaps breaking, this portion of the mill. For this reason it is customary to keep spare wedges in stock, so that they may be renewed in a few minutes if a breakage occurs. These wedges are also useful on account of their elasticity permitting a certain amount of play between the top and the two bottom rollers, by which means they adjust themselves to variations in the feed.

The most usual description of sugar-mill is shown in Figs. 7052, 7053; Fig. 7053 being the front, and Fig. 7052 the side elevation respectively. In this case the rollers are similar to those of

7052.

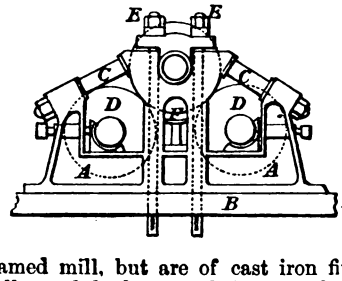

7053.

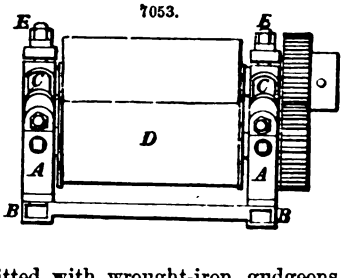

the wooden-framed mill, but are of cast iron fitted with wrought-iron gudgeons, the distance between the roller and the bearings being less than an inch. The framing is of cast iron, each side frame being cast in one piece.

A, A, are the side frames fitted on the bed-plate B. C, C, bolts fitted with distance-pieces and firmly screwed up so as to strengthen the framing in the direction of the thrust between the top and the two bottom rollers. The reason bolts are employed, instead of casting that portion of the framing solid, is to remove the bottom rollers in case of necessity. The lower rollers D, D, are provided with flanges for preventing the cane from getting out at the sides, and are adjusted by means of screws. Another method has been applied, of acting simultaneously upon each pair of screws by means of a horizontal shaft and bevel-gearing attached to their heads, somewhat similar to the adjusting gear of an iron mill, as in Fig. 4472. The bolts that hold down the top roller are carried through the framing and secured by a cotter at the lower end. In some mills they

are only carried down a short distance, the cotter being passed through a slot in the framing, but this plan throws all the upward strain on the cast-iron framing, which, if broken, could not be repaired with the same facility as the bolts. The dumb turner, or dumb returner, F, Fig. 7052, is a curved plate of iron, usually perforated and grooved, so placed as to receive the canes from the front roller and guide them on to the back roller. For clearness of illustration the feeding table and delivery are omitted, but are shown in Fig. 7051. They consist simply of a flat surface and two sloping surfaces, to allow the canes to slide down them, the portion of the delivery nearest the roller being filed off to a knife-edge and set as close as possible to it, to prevent the crushed cane from being carried round in consequence of its sticking to the surface.

Fig. 7054 is a side elevation of a mill designed to obviate the excessive strains to which sugar-mills are constantly and almost suddenly subjected. It will be seen that in this arrangement the top roller is kept down by a compound lever, and as the distance of the weight from the fulcrum of the lower lever or the weight itself can easily be varied, any required pressure may be obtained. As it is not at all unusual for the feed to vary so much that at one moment few if any canes are passing between the rollers, whilst at the next the mill is choked with them, the play here permitted becomes of the highest importance.

7054.

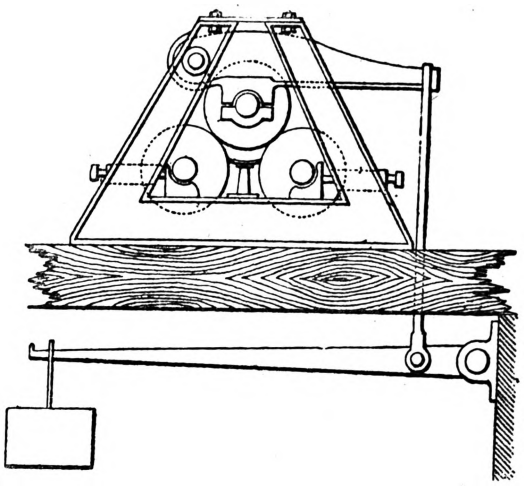

The disadvantage of this mill is that it allows too great an amount of play; as when a large quantity of canes are passing it is necessary that the pressure should be proportionately great, or the inside ones would not be properly crushed. This fault might be somewhat overcome by the use of a spring instead of a weight.

Although not often applied, reversing gear is very essential, as it not unfrequently happens that the mill gets choked, when it is necessary to reverse in order to free the rollers.

Combined Cane-mills.—In the mills just described the foundation is both a very important and a very costly item. It consists of three parts; that carrying the engine, another carrying the intermediate gearing, and that under the mill. To render the mill effective it is necessary that these should be very massive, of first-class workmanship, and firmly bound together by iron or timber. As good materials and workmanship are seldom to be obtained where the sugar-cane grows, a species of mill called the combined cane-mill has been extensively employed. This term includes all those mills where the engine, gearing, and mill stand on the same bed-plate, so that the strain upon the various parts should be self-contained and entirely independent of the foundations, and thereby do away with the chief expense incurred abroad. In 1844 H. O. Robinson introduced an arrangement for a combined mill, which, although frequently copied in principle, did not as a whole come into general use.

Figs. 7055, 7056, are of a combined mill by H. O. Robinson. The bed-plate is made in two pieces, and, as in this case, is adapted for altering an old mill into a combined mill by the attachment of the old bed-plate of the mill to the bed-plate of the engine by means of strong brackets. In a new mill, however, the bed-plate would be cast in halves and bolted together. In order to reduce the number of revolutions of the engine-shaft to that requisite for the mill-rollers, double gearing is employed, the first pair of wheels being internal. By this arrangement the spur-gear is brought within convenient proportions, and the only defect is the height of the crank-shaft from the bed-plate, which renders it rather unstable when the feed is moderately heavy.

7055.

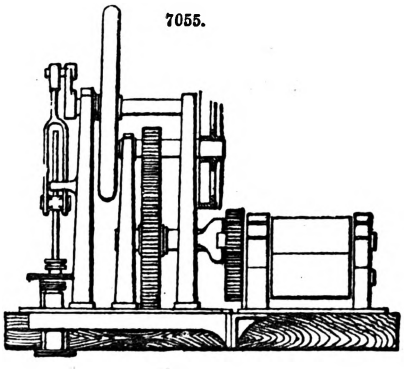

7056.

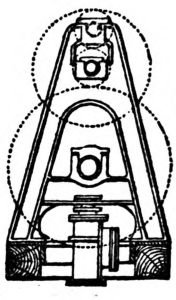

G. Buchanan constructs the side frames of sugar-mills with a combination of cast and wrought iron, by which means a degree of lightness and strength is attained far superior to that of any iron mill we have described. The cast-iron skeleton side frame is made as in Fig. 7057; upon each side of this is fitted a stout wrought-iron plate about an inch thick, and cut out as in Fig. 7058 to the requisite pattern to form the frame. The wrought-iron sides and cast-iron skeleton are firmly fixed together by riveting through holes made to correspond, Figs. 7057, 7058. To avoid the necessity of supplying two spare rollers in case of accident, that is, one for the top and one for the bottom, the flanges of the bottom rollers are dispensed with, so that all three rollers being alike, only one spare one is required. The canes are prevented from getting out at the ends of the rollers by means of a fender-plate A, Fig. 7059, fixed at each end of the top roller, which fits in between the feed and delivery tables B, C. To avoid lifting the bottom rollers when they are required to be taken out,

the openings in the side frame are made horizontal; by this means also the top roller need not be removed before drawing out the others. Wrought-iron tie-bars, shown in dotted lines at D,

7057.

Cast Iron Skeleton Standard.

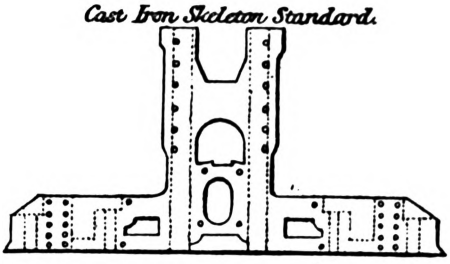

7058.

Cast Iron Skeleton for each side of Standard.

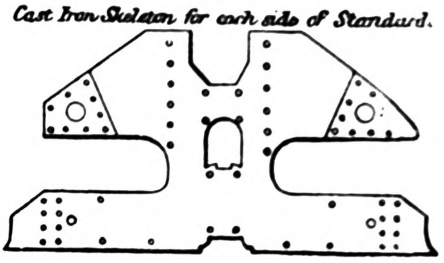

Fig. 7059, are used for the purpose of bracing together the framing, and also for setting up the lower rollers, these bars being topped to receive the adjusting screws.

Fig. 7060 is an elevation of one of these mills complete. In this case it will be seen that the machinery is kept well down, so that great steadiness is obtained. As in Figs. 7055, 7056, double gearing is employed, only the internal spur-gearing is used for the second motion instead of the first, thus placing the strongest form where the greatest strain occurs.

For convenience in feeding cane-mills a cane-carrier is sometimes used. This consists in an endless band, the width equal to the length of the rollers and of any desired length. It is usually made of thin slots of wood attached to a pitch chain running over wheels in the usual

7059.

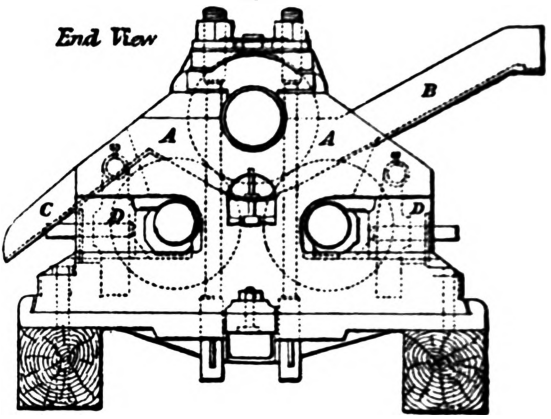

7060.

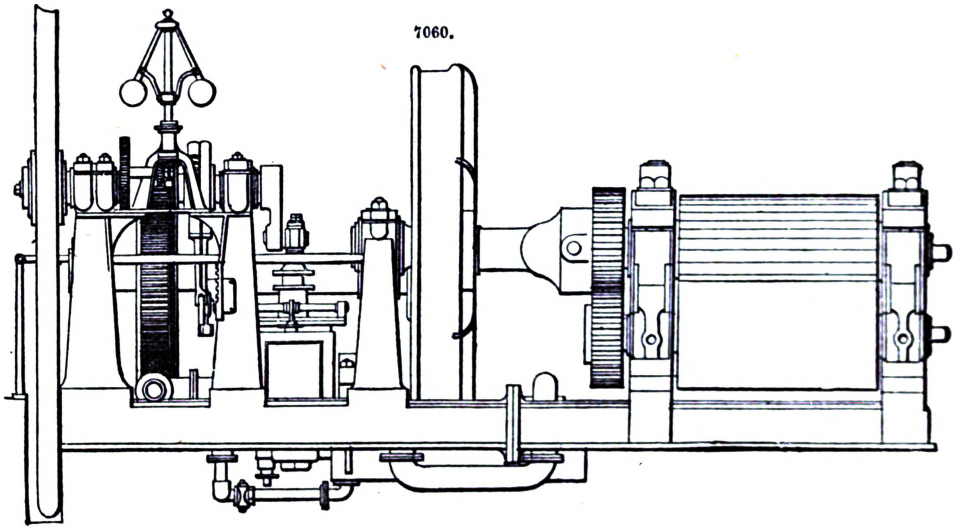

manner. The driving wheel is generally connected, either by a belt or gearing, to one of the mill-spindles. By this means the canes can be spread evenly over the table and fed into the mill with much greater regularity than the old method of pitching the bundles of cane directly between the rollers. A trash elevator, made in a similar manner, is also used for carrying away the crushed cane or trash into the drying sheds.

Besides roller mills two or three other methods of extracting the juice from canes have been tried.

Henry Bessemer, in 1849, devised an arrangement, a side elevation of which is given in Fig. 7061. It will be seen that it consists of an engine A driving a crank-shaft B, upon which there are two cranks working the plungers C. These plungers work backwards and forwards in two rectangular boxes D, the sides and bottom of which are pierced with small holes, while the ends are open. These boxes were intended to be parallel throughout, but afterwards they

were slightly contracted towards the ends. In the figure, only one box and plunger can be seen, the other being arranged alongside. To work this press a cane is put into each of the

7061.

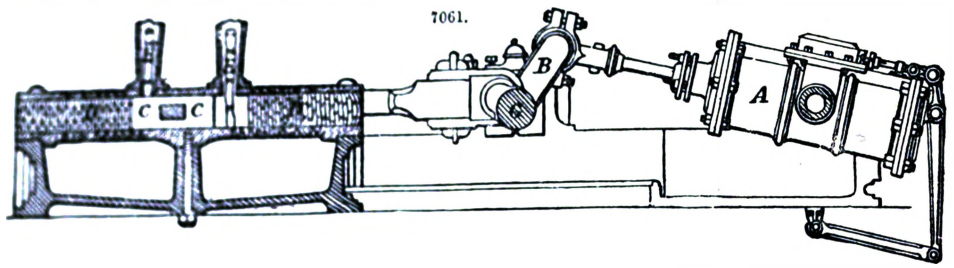

four hoppers E, E', and the engine started; when, as the plunger moves to the end of its stroke, Fig. 7061, it leaves the bottom of the hoppers E open, and allows the canes to drop down into the boxes D. Upon the return stroke the plunger cuts off those parts of the cane that are in the box and forces them along the rectangular casing, and while thus acting it leaves the openings of the hoppers E open, when the canes drop down into the box, and a similar process is repeated on the return stroke of the plunger. By this means the rectangular chambers become filled with pieces of cane equal in length to the height of the box. It was thought that as the canes were somewhat roughly cut off they would offer considerable resistance to the plunger as they were gradually forced to the open ends of the boxes, which resistance would be increased in proportion to the number of pieces of cane; and that when the boxes were full their united resistance would be so great that the pressure required to force them along would completely press out the juice through the perforations B' in the box. When the machine was tested in England with canes brought, we believe, from Madeira, this result was fairly obtained, but in this case the canes were very hard and tough. When tried afterwards in the West Indies with fresh juicy canes it was found impossible to obtain sufficient pressure, and with parallel chambers the pieces of cane were shot out at the open end as fast as they were cut off. When the chambers were tapered so as to prevent this, the shock at each stroke of the plunger became so excessive as to endanger the machinery, whilst very little juice was expressed.

Another method of extracting the juice, used both for canes and beet-root, is that known as the diffusion process. In 1844 Constable proposed to cut the cane into cross slices by means of a revolving shaft carrying a number of circular cutters on it, and so placed that the slices were made about the tenth of an inch thick. These slices of cane were then to be put into vessels and cooked in hot water until the sugar was dissolved out. A series of vessels was to be employed, so that as the liquor in the first became too much charged with sugar to dissolve the whole of it out of the contained slices, they were placed in the next, wherein the liquor was weaker, and so on until the liquor in the first vessel became sufficiently charged with sugar to be pumped out into the evaporating pan, when this first vessel in its turn became the last of the series.

An improvement upon this method was made in 1869 by Julius Robert, of Austria, in which the entire process of diffusion is carried on continuously in one vessel. This is effected by introducing the slices of cane or beet-root through a feeding apparatus at the bottom of the vessel, from which they rise slowly and gradually to the top, while the fresh water is constantly running in at the top, and is drawn off at the bottom as diffusion juice, after having remained in contact with the slices a sufficient time. The water in its gradual descent through the entire height of the diffusion vessel passes through all the stages of gradually increasing concentration, and the sugar in the slices, in their ascent, becomes gradually extracted in a corresponding manner, so that the whole process of extraction is carried out in a single vessel instead of a battery of diffusers.

Fig. 7062 is a sectional elevation of Robert's diffuser. It consists of a cylindrical diffusion vessel A fitted with a central shaft B which carries a series of arms or blades C, C, and is kept in slow rotation by the gearing D. The slices of cane are fed in through the tube E by means of a series of screw-blades revolving on the spindle F, by the action of which they are forced down into the perforated bottom H of the diffuser, where they are spread over its surface by the rotating arms C. The diffusion vessel is divided at equal distances by perforated plates, which permit the free descent of the water or diffusion juice, but prevent the slices from rising too rapidly. Each of these plates is provided with an opening equal to about one-eighth of its area, through which the slices can rise into the next division, but these openings are so placed as to prevent the slices from ascending in a straight line to the top of the vessel. Each perforated plate has a revolving blade C above and below. The water is introduced at the top of the vessel through the perforated pipes *i*, *i*, connected with the main pipe I. The diffusion juice is drawn off through the pipe J, and the extracted cane is swept off by the revolving scraper K. A coil pipe L is provided for heating the juice by steam if required.

The cane-juice in its way from the mill to the clarifiers passes through a strainer for the purpose of freeing it from bits of cane and other mechanical impurities. This strainer consists of a series of three or four perforated plates, the holes in the lowest being the smallest. The top plate, which stops all the large pieces, is frequently roughly cleared out by hand, and when the mill stops the whole are properly cleaned. As the clarifiers are usually placed considerably higher than the mill the juice has then to be raised. This is generally done by means of large-barrelled, short-stroke pumps, worked from one or more of the roller gudgeons; usually two pumps are employed, to prevent stoppages in case of one getting choked. The objections to the use of pumps are, that a certain amount of grease and metal from the working parts is mixed with the juice, and also that the juice

is kept too long at a temperature most suitable for fermentation. A French invention, termed a monte-jus, Fig. 7063, is now very generally substituted for these pumps. The body of the monte-

7062.

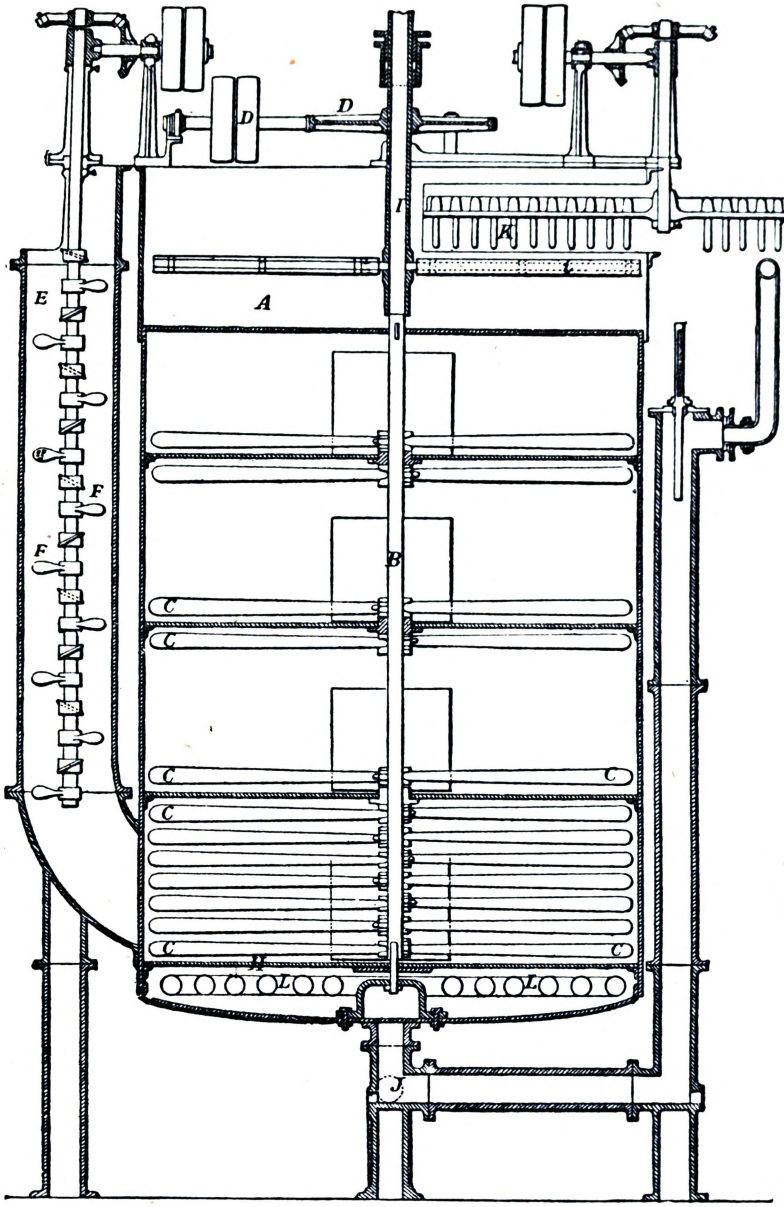

7063

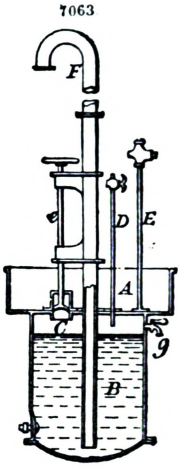

jus consists of two parts, A and B, separated by a steam-tight diaphragm; the upper part A receiving the juice from the mill, while the charge in the lower portion is elevated. When the lower part B is empty the valve C is raised by means of the handle *c*, and at the same time the cock of the air-pipe D is opened. The juice in the upper portion A at once descends into the chamber B, the valve C being left open until it is sufficiently full, and then screwed down. In order to ascertain when the chamber B is charged, the air-pipe D is carried down from 4 to 6 in. below the top of the chamber B, or to the height to which the juice should attain; the cessation of the whistling noise made by the air rushing out at this air-pipe being the signal for shutting off the supply. The air-cock being closed, steam is introduced through the steam-pipe E, when the pressure on the surface of the juice forces it out through the discharge-pipe F. As this pipe is carried down to within a short distance of the bottom, the whole of the liquor is discharged from the lower chamber. A small cock *g* is provided in case the chamber B should be allowed to get too full, as in that case the steam, when let in through the pipe E, mixes with the juice and condenses. By this method of raising the juice it is kept free from grease and dirt, there being no working parts in the machine; it is also made sufficiently warm to retard fermentation.

Clarification.—This process consists in removing, as far as possible, all impurities from the juice,

whether mechanical or chemical; we shall, however, confine ourselves to describing the clarifiers used in the almost universal practice of clarifying or defecating by common lime. These consist of two classes, clarifiers heated by an open fire or the waste heat from the evaporating pans, and those which are heated by steam. A very usual plan of heating by means of the waste heat from the evaporating pans is shown in Fig. 7064. Here the clarifiers A are circular pans, holding about 500 gallons each, and are heated by the waste heat from the battery B; the arrangement of flues C and dampers D illustrating the method by which any one or more clarifiers may be heated as required, and also the means by which the heat may be allowed to pass direct to the chimney. This plan is

7064.

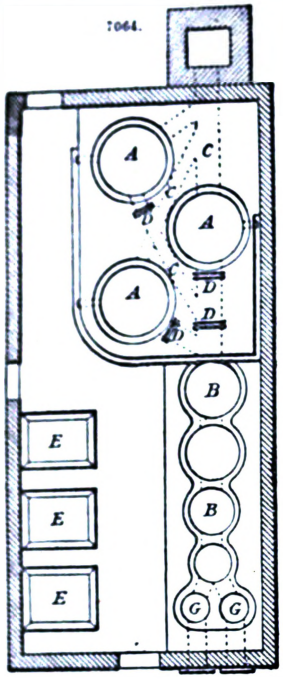

7065.

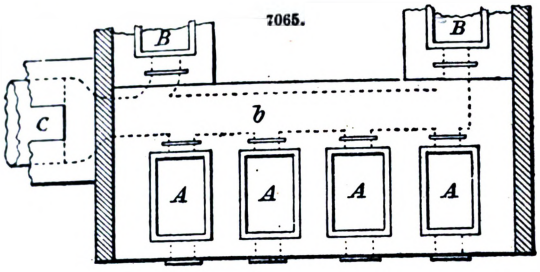

7066.

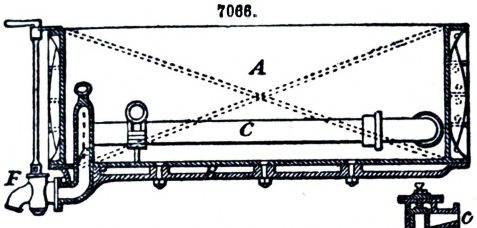

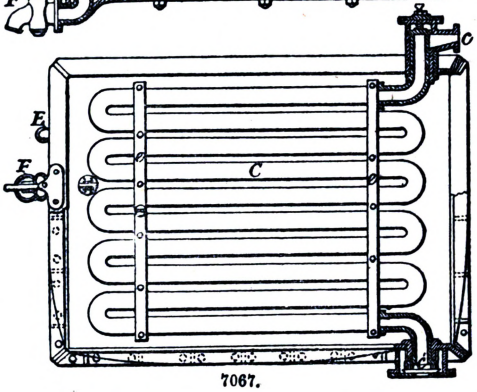

7067.

especially adapted to sugar-houses where no steam is used, where, for instance, the mill is driven by water power, and the juice evaporated under the old system. Fig. 7065 is another method of heating by a separate fire under each clarifier, the waste heat going into the same flue *b* as that of the evaporating pans B, and both combining to heat one or more steam-boilers C. This plan may be adopted where the sugar is finished in any of the modern methods, and is sometimes preferred in consequence of the first cost being much less than steam clarifiers.

In spite, however, of the first cost, there is no doubt that heating by steam has great advantages and is eventually the cheapest. Figs. 7066, 7067, are a sectional elevation and plan of a steam clarifier of the ordinary type. It consists of a rectangular cast-iron vessel A, usually from 500 to 700 gallons in capacity, fitted with a double bottom B, into which steam is admitted as required. A coil of copper pipes C is fitted inside the pan, into one end of which, *c*, steam is admitted, which after traversing its length passes out at *c'* into the double bottom B, the condense water being drawn off by means of the cock E. In order to facilitate the cleaning of the pan the coil is clamped together at *e e'*, and is fitted at *c c'* with stuffing boxes, so that by means of a ring-bolt fitted in the clamp *e* it may be lifted into an upright position. By this means it is evident that the liquor contained in the clarifier may be heated as soon as it is a few inches deep, and, what is of great importance, the steam can be shut off at the exact time required. The cock F, which is for the purpose of drawing off the liquor, is fitted with a plug *f* perforated with holes, placed at a suitable distance above the bottom of the clarifier, in order that the sediment formed during the process of defecation may be prevented from passing off with the clear liquor.

As soon as sufficient cane-juice has been run in, that is, as soon as it reaches to the top of the flues in the fire-heated pans or covers the coil in the steam pans, heat is applied. When the juice has attained a temperature of about 140° a small quantity of fine-ground lime, about 1 lb. to every 600 gallons of juice, is made into a milk, thrown into the pan and thoroughly stirred in. The temperature is then allowed to rise until the thick scum which forms at the top begins to harden and crack, when the heat is shut off, and the liquor, now clarified, allowed to stand for at least a quarter of an hour. In drawing off the liquor a small quantity of a dirty colour comes away first, which is usually returned into another clarifier while it is being filled. The liquor is then run into the filter or evaporating pans, as the case may be, until within a few inches of the bottom, about the height of the lower perforations in the plug, Fig. 7066, when upon it changing colour it is stopped.

What is left, consisting of the top scum and bottom sediment, is usually sent to the still-house. In some places, however, where labour is cheap and the rum inferior, a scum press is used for extracting the contained liquor, which is either re-clarified or filtered. This press consists of a square chamber perforated with small holes, and into which a piston is fitted and worked down by a screw.

Filtration.—After clarification, or at a somewhat later stage of the manufacture, it is usual to filter the liquor, partly in order to get rid of the feculencies too minute for elimination by the former process, and also to decolorize and chemically purify it. In Fig. 7068 is shown what is called a bag or bell filter, the latter term being applied in consequence of the shape of the metal pieces, or bells A, to which the upper end of the bags B are attached. This filter consists of a casing, usually about 9 ft. high, 5 ft. wide, and 3 ft. deep. The upper portion C is a cistern, the bottom of which is pierced with a series of holes into which the gun-metal bells A are fitted. The bags B which are tied on to these bells, consist of an outer casing of coarse canvas about 8 in. in diameter and 6 ft. long, and inside this casing is stuffed a bag of twilled cotton, made expressly for the purpose, about 3 ft. in diameter, and the same length as the outer casing. The reason for making the inner bag so much larger than the outer, is to give more filtering surface, the outer casing being only of use to keep the other within bounds. The centre portion of the casing D is provided with doors the whole of its height and width for convenience in changing the bags as they become dirty. The lower portion of the casing E is a cistern for holding the filtered liquor which is drawn off as required. These filters have been found useful for cleaning the liquor, but they do not affect it in any other respect; besides which their height makes them inconvenient, and necessitates pumping.

7069.

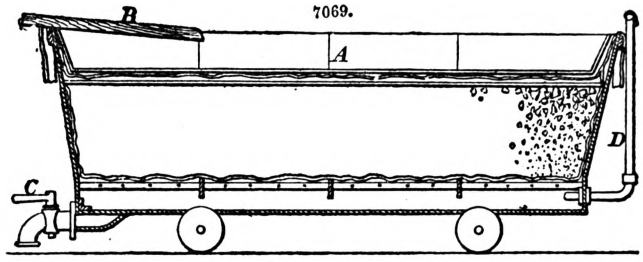

7068.

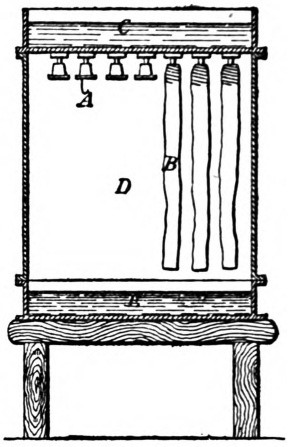

A charcoal filter to be used at this stage of manufacture is shown in Fig. 7069, where from its comparative shallowness the liquor may be run in without pumping. This consists of a light galvanized iron pan A running on a tramway. A perforated plate covered with a blanket is fitted about 6 in. from the bottom, and a similar division is made the same distance from the top. The space between these is filled with animal charcoal. The liquor from the clarifiers runs in through the gutter B, thence through the charcoal into the bottom compartment, whence it is drawn off by the cock C. A small pipe D is provided so that the liquor in passing through the charcoal should not be retarded by the air getting compressed in the lower chamber. The object of this filter is not only to remove the impurities similarly to the bag filter, but to partially discolorize the liquor and also to neutralize any acid that may remain.

The general form of charcoal filter employed for making high-class sugar, principally in refineries, is shown in Fig. 7070. The filter is an upright cylindrical casing of wrought iron, divided into three compartments A, B, C, the top being a cistern for receiving the liquor, the centre and largest compartment containing animal charcoal, and the bottom being a small chamber fitted with a cock for drawing off the filtered liquor. A man-hole D is provided for cleaning out the exhausted charcoal, and an air-pipe E for letting off the air when the hot liquor is first run into fresh charcoal. The divisions between the compartments are formed of perforated plates upon which a coarse piece of woollen is placed, the upper division being used for distributing the liquor over the charcoal, and the lower for preventing the charcoal from coming through with the liquor. The liquor is elevated by a monte-jus through the pipe F.

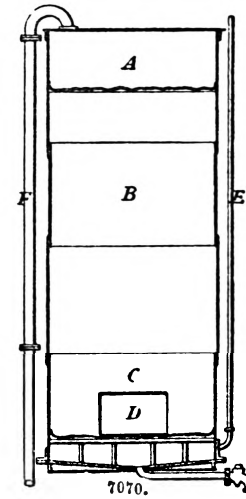

7070.

Evaporation.—There are two plans adopted for driving off the water in the liquor, which ought to be only sugar and water, as it comes from the filters, either by a naked fire from first to last, or partly by fire and partly by steam. The former, which is the old and perhaps still the most usual method, is illustrated in Fig. 7064, and consists of four coppers B, and two teaches C, under each of which is a furnace. The liquor is first run into the largest or grand copper, and as it evaporates is ladled into the next, and so on, until it arrives at the teaches almost sufficiently concentrated. In these it is still further evaporated until the liquor contains about 70 per cent. of crystallizable sugar, when it is skipped or struck, that is, emptied out into coolers E. In order, however, to evaporate even thus far, the heat is so great (242°) that the colour of the sugar is excessively darkened, and consequently its value greatly reduced. The only advantages this system possesses is that the plant costs but little, and also that skilled labour is unnecessary.

The modern method of evaporation consists in concentrating the liquor up to a point at which it is not likely to have its colour affected by the old method of an open fire, and afterwards bringing it up to the required state of concentration at a comparatively low temperature. The first portion of this process is similar to the old method without the teaches; but instead of having a series of coppers, a long rectangular boiler, divided into compartments, usually called a battery, is generally adopted. Figs. 7071, 7072, are longitudinal and cross sections of a battery. It consists of a long

7071.

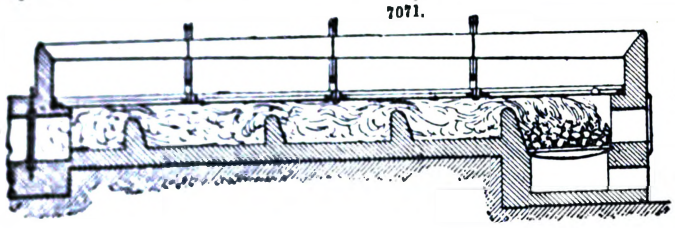

7072.

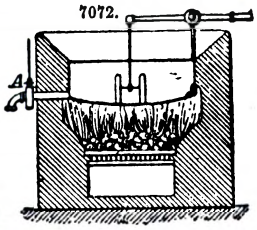

and somewhat shallow vessel, usually from 30 to 40 ft. long, 4 ft. wide, and varying in depth from about 26 to 30 in. at the end farthest from the fire to about 20 in. at the near end. It is set with bridges in the flues to prevent the heat going too much up the chimney, the brickwork being carried up 8 or 12 in. above the top of the pan, and bevelled off to allow space for the froth of the boiling liquor. The battery is divided into compartments by transverse partitions having sluice-valves at the bottom; these valves being worked by a lever, Fig. 7072. By this means the liquor is allowed to flow down, as required, without having recourse to the laborious method of ladling from one compartment to another. When the cane-juice has been evaporated to a density of about 29° Beaumé, at which degree the boiling point is about 224° Fahr., and consequently considerably below the temperature at which the juice is injured in colour, it is drawn off by means of the cock A, for the purpose of being treated by one of the following methods of evaporation at low temperature.

Methods for Concentrating Cane-juice at Low Temperatures.—Of the various schemes proposed for this purpose, two only have been found to be practically useful; one having for its object the exposure of thin films of heated liquor to the cooling effect of the air, and the other the rarefaction of the air in which the liquor is placed. The former, as being cheaper and more simple to manage, is generally used in modern sugar-houses of moderate dimensions; while the latter, evaporation in vacuo, is preferred on some large estates, and universally in refineries.

The Wetzel Concentration Pan, illustrated in Figs. 7073, 7074, consists of a semi-cylindrical pan A,

7073.

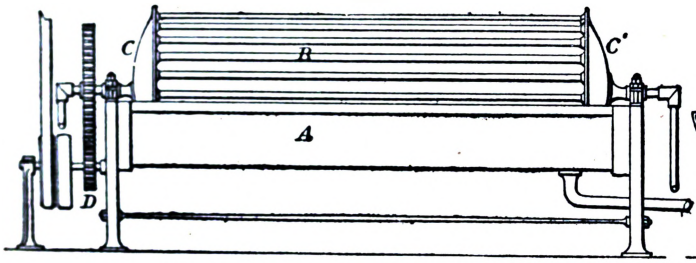

7074.

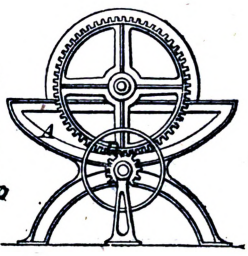

enclosed in a steam-jacket supplied from the exhaust of the engine, into which is fitted a cylinder of tubes B, fitted into the hemispherical ends C, C'. The liquor to be evaporated is run into the vessel A, and when full steam is admitted into the end C, thence through the tubes B, and out at the end C', while at the same time the whole is caused to revolve slowly by means of the gearing D. By this means a film—the liquor, which is kept hot by the steam-jacket of the pan—is carried up into the air, and the moisture evaporated from it; the heat thus extracted being constantly supplied by the steam inside the tubes. As the steam used for this purpose is only of a moderate pressure, the heat thus supplied is not sufficient to discolour the sugar. In fact, the amount of evaporation is so great that the temperature rarely exceeds 200°, and is usually much less. The only objection to this design of pan is that the tubes are apt to churn the liquor, and cause an inconvenient amount of froth, unless driven at an exceedingly slow speed. This defect has, however, been partially overcome by reducing the diameter of the drum, and giving it a proportionately greater length.

7075.

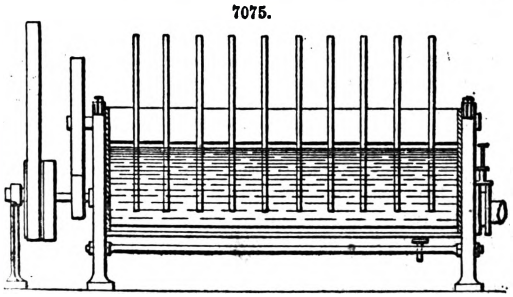

Another pan for accomplishing the same object, invented by Shroeder, is shown in Fig. 7075, where the drum of steam-pipes is replaced by a series of thin galvanized iron discs. This design has the advantage of not frothing or churning the liquor, and it is also much cheaper; but the process of evaporation is much slower, in consequence of the revolving portion being deprived of supplementary heat.

Fig. 7076 is a modification of this plan proposed by Bour, of Mauritius. Here the discs are made hollow and somewhat spherical, and are provided with cups after the principle of a dredging machine, the liquor scooped up by them being discharged over the surfaces of discs as they attain their highest elevation. In this case sufficient heat is obtained for rapid evaporation, and if the cups were removed no churning action could take place.

7076.

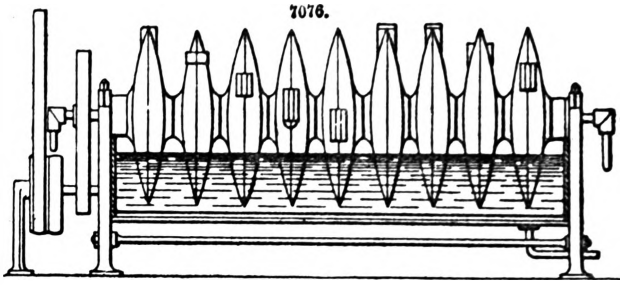

In working a pan upon one of the above principles the liquor is generally run out of the open-fire battery, as already described, at a density of about 27° Beaumé, directly into it until the liquor is within a few inches of the top. The discs or pipes, as the case may be, are then caused to revolve very slowly, and steam heat applied until a strong grain appears in the liquor, which is quite thick. It is then run out into coolers, when the pan is ready for another charge. Some sugar makers prefer to add fresh liquor to pan from time to time as it evaporates down, so that the pan is kept nearly full. The reason for this is that the crystals originally formed from the first charge act as a nucleus for those of the successive charges, and that consequently a bolder, or larger, grain is obtained. We think, however, that this object is better obtained in the coolers by making them sufficiently large to hold several skips, or else by dividing the skips among several coolers, as the temperature in the pans is generally too high for that purpose. The coolers are usually shallow, rectangular vessels made of hard wood, and having their sides sloping outwards as shown at E, Fig. 7064, a usual size being 6 ft. by 4 ft. by from 12 to 15 in. in depth.

The Vacuum Pan.—The best method of evaporating the liquor is by means of a vacuum, but unfortunately the machinery required for this purpose is not only very expensive, but it is also necessary to employ skilled labour to manage it.

The vacuum pan was invented by E. C. Howard in 1812, since which time various improvements in the details and many modifications in its shape have been made, but the principle has remained substantially the same. In Fig. 7077 is shown one of the best modern arrangements. The vacuum pan A is usually made of copper, the lower half being enclosed in a cast-iron jacket. A man-hole B is placed on the top for the purposes of cleaning and repairing. The pipe D is for the purpose of carrying off the vapour, and is fitted with a vessel variously termed a safe or tell-tale E, for catching the liquor if it primes over, when it is returned through the cock *e*, the amount of overflow being shown by the glass gauge attached to the side. The vapour passes on to the condenser F, the pipe G supplying the cold-water jet, and the pipe H leading to the air-pumps. The steam is supplied to the pan by the stop-valve I, and the condensed water is removed through the pipe *i*. A measure J, holding the right quantity of liquor to constitute a charge for the pan, is connected to it through a pipe, and is also provided with a glass gauge *j*. This measure is filled through a pipe leading to the liquor cistern, a vacuum being formed in the measure by means of the air-pipe L, connecting it to the top of the vacuum pan. A glass sight-hole N is fitted in the upper part of the pan, a similar sight-hole being placed on the opposite side, so that by looking through the one, the other, especially when assisted by a lamp, affords sufficient light to judge of the state of the contained liquor. In addition to this, means are adopted for extracting a sample from the inside of the pan without disturbing the vacuum, by the use of a proof-stick O, Fig. 7078, which is capable of being inserted and screwed air-tight into the pan in an oblique direction. This consists of a gun-metal rod with a cavity at the lower end for receiving the sample, and fitting into a hollow casing. At the lower end of this casing is fitted a shell-cock, the end of the gun-metal rod with the cavity being made square, fitting into the hollow plug and acting as a spanner. As the aperture of the plug corresponds to the cavity in the proof-stick, as soon as it is opened to the liquor a portion flows in, when by turning the plug half round connection with the contents of the pan is cut off, and the portion that has flowed into the cavity of the proof-stick can be safely withdrawn for examination. The pan, Fig. 7077, is also supplied with a thermometer P, and barometer Q, fitted to its upper half, for ascertaining the temperature and quality of vacuum inside. There is also a steam-pipe R, for cleansing the pan when necessary. When the syrup is sufficiently boiled it is discharged through the valve

7077.

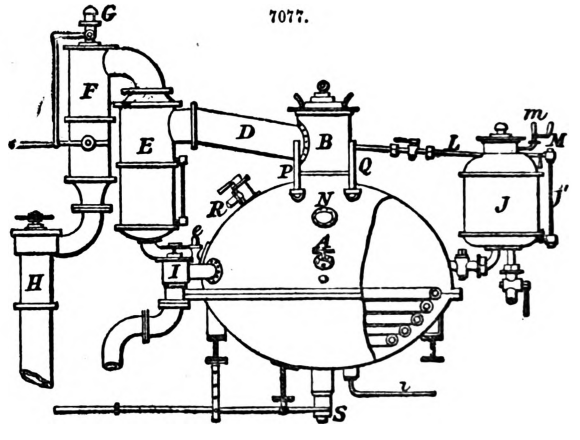

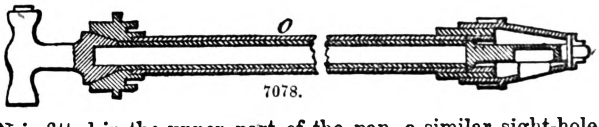

7078.

8, either into a cooler, a heater, or taken directly to the centrifugals. The most usual plan on sugar estates is to treat it in the old method, that is, to run it into coolers; but for making refined or white loaf-sugar it is discharged into a pan similar to the bottom half of the vacuum pan, but without the coil, where it is raised to a temperature of 180° to 200° before being run into the moulds. Some prefer to pass it through the centrifugals at once, as it is cured much more quickly; but this is only in consequence of the large proportion of sugar held in solution, and which would have crystallized if left to cool. As but few estates are large enough to keep a vacuum pan constantly going, it is usual to run the half-concentrated liquor into tanks or subsiders, in order that what impurities are left may be allowed to separate before the liquor is drawn up into the pan.

Fig. 7079 is an elevation of a set of vacuum pumps.

7079.

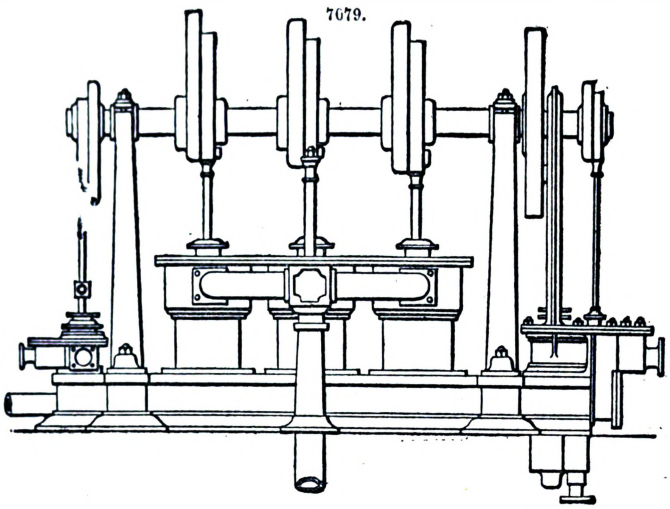

A considerable modification of the system of boiling in vacuo is that known as the triple effet, being of French origin. It consists of a set of three vacuum pans connected to one another, and is intended to evaporate the liquor from the beginning, thereby superseding the use of a naked fire altogether.

The main objects of the triple-effet pan are economy of fuel and in condensing water. In the first of the three pans there is but little vacuum, usually about 5 or 6 in. of mercury. In the second the vacuum is better, or about 12 to 14 in.; and in the third is maintained as good a vacuum as possible.

The pans are heated by steam—usually obtained from the exhaust of the mill and air-pump engines—being introduced into the first one, which, from the lowness of the vacuum, requires the most heat. The steam given off by this pan is used for heating the second, where the vacuum is better; the third pan being similarly heated from the steam of the second. The vapour of the third pan is condensed in the same manner as that of an ordinary vacuum pan.

Fig. 7080 is an arrangement by Manlove, Alliott, and Co of this system.. A is the measure

7080.

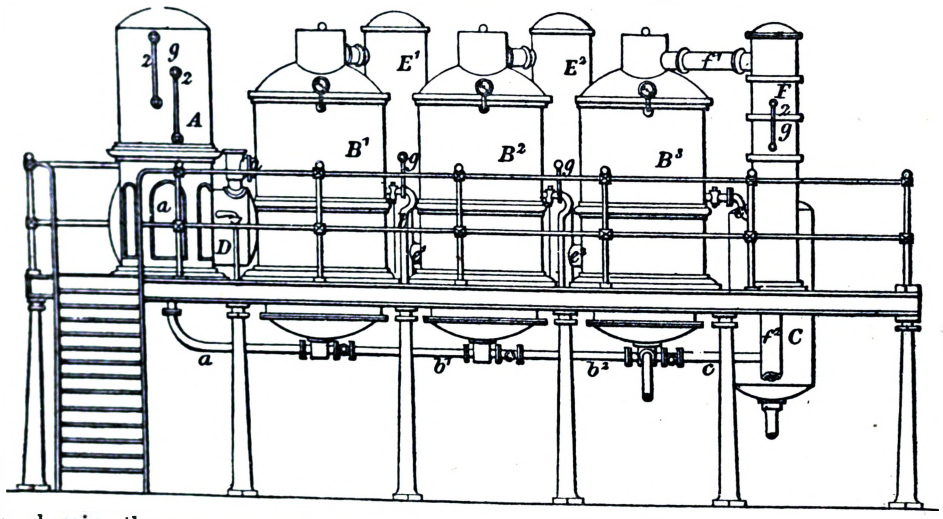

for charging the pans, connected by the pipe *a* to the first pan B^1, which is connected by the pipe b^1 to the pan B^2; the third pan B^3 being in its turn connected by the pipe b^2 to the second. This third pan is also connected to the monte-jus C by the pipe *c*. The first pan B^1 is heated by steam from the steam-receiver D, the vapour from this pan passing into the receiver E^1, and thence into the steam space of the second pan; a similar process being repeated with the third pan B^3, to which is connected the condenser F and air-pumps. The vessels E^1, E^2, and F, also act as safes or tell-tales, in case the liquor primes over.

Supposing the first pan, which has a very slight vacuum, to boil at 200°, and the third, with the best vacuum, to boil at 150°, the boiling point of the second or middle pan should be 175°, or intermediate between the two. The steam from the first pan would thus be 25° hotter than the liquor in the second, and the steam in the second 25° hotter than the liquor in the third; a sufficient difference to produce a brisk boil. In this case the evaporation should theoretically proceed at

the same speed in each pan, but practically there is a slight amount of loss in the transmission of the heat.

The advantages claimed for this system are economy in steam and in water for condensing the vapour of the liquor. And no doubt by utilizing the heat of the vapour twice over instead of condensing it directly, such economy is obtained, although whether it is sufficient to compensate for the increased cost of the apparatus has not been as yet determined.

Fryer's Concretor.—The only other method of evaporation which remains to be noticed was invented by Fryer, of Manchester, and is intended to evaporate the liquor to such a point that when cold it becomes a solid mass. This is only of use to the refiner, but for his purpose it appears to be well suited.

Figs. 7081, 7082, are of a Fryer's concretor by Manlove, Alliott, and Co., of Nottingham.

7081.

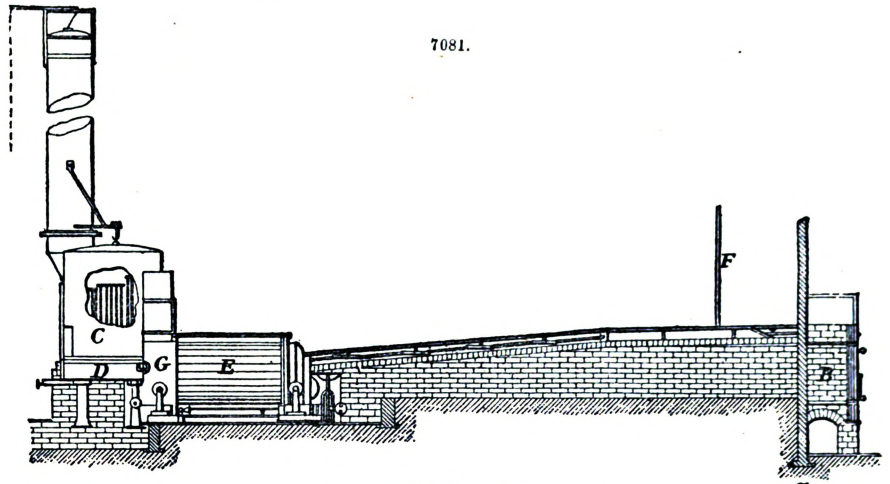

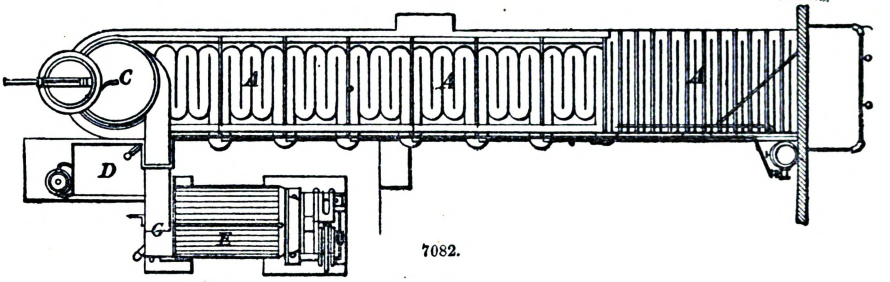

7082.

Fig. 7081 is a side elevation; Fig. 7082, a plan. The concretor consists of a series of shallow trays A, A, A, placed end to end, and divided transversely by ribs running almost from side to side. At one end of these trays is a furnace B, the flue of which runs beneath them, and at the other end is an air-heater C, which makes use of the waste heat from the flue, and employs it in heating air to be made use of in the revolving cylinder E. Between the trays A, A, and the revolving cylinder E, is a small tank D. The whole series of trays A, A, A, is placed on a slight incline, the upper end being next the furnace. The upper three trays are made of wrought iron, since the intense heat here would render cast iron liable to fracture. The clarified juice from the pipe F flows first on to the tray next the furnace; it cannot flow straight down the incline towards the air-heater C, because of the transverse ribs already alluded to, which oblige it to flow from side to side of the tray in a shallow stream. Thus it has to traverse a channel some 400 ft. long before it can flow away from the trays at the end next the air-heater, although the distance from the furnace to the air-heater in a direct line is not quite 50 ft. While flowing over these trays the juice is kept rapidly boiling by means of the heat from the furnace, and although it only takes some eight to ten minutes to traverse them, its density is, during this short time, raised from say 10° to about 30° Baumé.

From the trays the thickened syrup flows into the tank D, and thence passes into the revolving cylinder E. This cylinder is full of scroll-shaped plates of iron, over both sides of which the thickened syrup flows as the cylinder revolves, and thus exposes a very large surface to the action of hot air, which is drawn through it by means of a fan G; motion is given to the whole apparatus by means of a small engine H. In this cylinder the syrup remains for about twenty minutes, and at the end of that time flows from it at a temperature of about 195° to 200° Fahrenheit, and of such a consistency that it sets quite hard on cooling. Thus properly-made concrete sugar forms a solid mass, not liable to drainage during transport, and ready for immediate shipment.

Curing.—This process consists in separating the uncrystallized or rock portion of the sugar, usually termed molasses, as far as practicable from the crystals of sugar, and effected by natural or artificial drainage. The old method, still in very general use, is to dig the semi-liquid mass out of the coolers as soon as it is sufficiently cold, and put it into hogsheads. These hogsheads have a series of holes bored in their bottoms, into each of which is fitted a bulrush, long enough to

extend a little above the top. After a few days these rushes are withdrawn and the molasses allowed to drain out through the holes. This process is very tedious and also very ineffectual, especially with low-quality sugar; a large proportion of molasses still remaining in the hogsheads when shipped, and constantly draining into the hold of the vessel. When the sugar has been filtered through charcoal and evaporated in the vacuum pan, as in refineries, and at some sugar estates, it is removed from the cooler, or rather the heater, into conical moulds of the shape of the loaves of sugar, and varying in weight from 10 lbs. to 56 lbs., according to the quality of the sugar. The apex of the cone, which is placed downwards, has a hole through it, which is stopped up during the process of filling and for about twelve hours afterwards. The room in which these moulds are placed is kept at a temperature of at least 100° to facilitate the drainage. When the holes at the bottom of the moulds are unstopped, the molasses—or, as it is now called, syrup—drains into a gutter placed underneath; a piercer made of steel wire being used for clearing the way at the lower end of the mould. After the syrup has drained away, clarified liquor is poured on the top, which as it filters through washes the sugar crystals without dissolving them. It is a well-known fact that sugar crystals are always colourless, and that the colour of a sample of sugar depends upon the liquor coating the crystals; if, therefore, this be washed off, the sugar assumes a perfectly white colour. In practice the lower portion of the cane is always coloured, but when the loaf is taken out of the mould, the coloured portion is knocked off, or if a handsome loaf is required, a new end, or nose, is turned on by means of revolving cutters.

Artificial Curing.—The above process is frequently hastened by attaching the orifice of the cones to a pipe in which a vacuum is formed, and thus sucking the liquor through the loaf. This plan was invented by Hague in 1816, who first proposed the system for unrefined sugar. The uncured sugar was placed in vessels the bottoms of which were made of perforated copper and connected to a pipe communicating with an air-pump, and thus the molasses was drawn through the perforations into the exhaust-pipe. It did not, however, find favour with the planters, and it is now superseded by the centrifugal machine, excepting, as mentioned above, for loaf-sugar. Centrifugal machines were first used for drying cotton and woollen goods, and were for that reason called hydro-extractors; but about thirty years ago Lawrence and Hardman designed one for expelling molasses from sugar, since which time a great many varieties have been invented, all, however, being alike in their essential features. These consist of a cylindrical basket revolving on an upright shaft, the sides of which are made of wire gauze or perforated metal, and into which the sugar is placed. This basket is enclosed in a casing of such diameter as to leave an annular space of about 4 in. into which the molasses is expelled by centrifugal force through the wire gauze when the basket is revolving at a high speed, a spout being placed at the bottom of the casing to allow the expelled molasses to run away to a receiver.

7083.

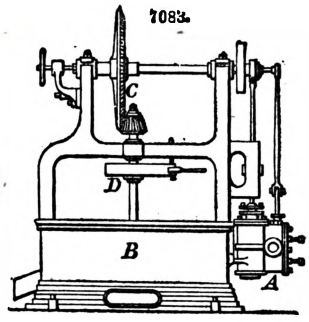

There are various arrangements of centrifugal machines, a few of the best of which are the following;—Fig. 7083 is an overhead machine, by Walker, Henderson, and Co., where the driving gear is placed above the basket. It will be seen that the basket is driven

7084.

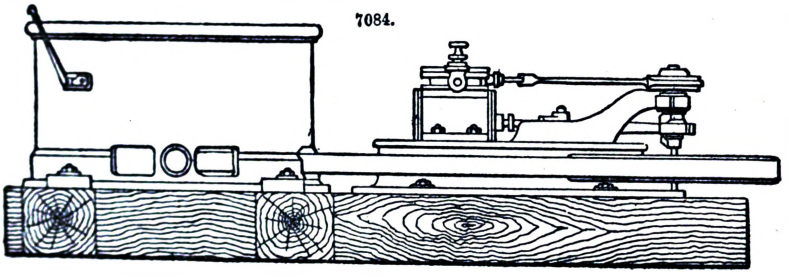

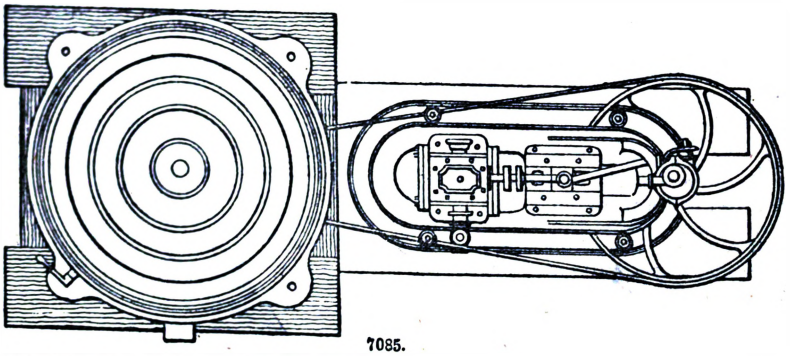

7085.

by a small upright engine A attached to the outer casing B, the speed being multiplied by frictional gearing C. A brake D is attached to the basket-spindle for convenience of stopping. Figs. 7084, 7085,

are an elevation and plan, and Fig. 7086 is an enlarged section, of a centrifugal machine, by Manlove, Alliott, and Co., Nottingham, driven by a separate engine. This method is very convenient

7086.

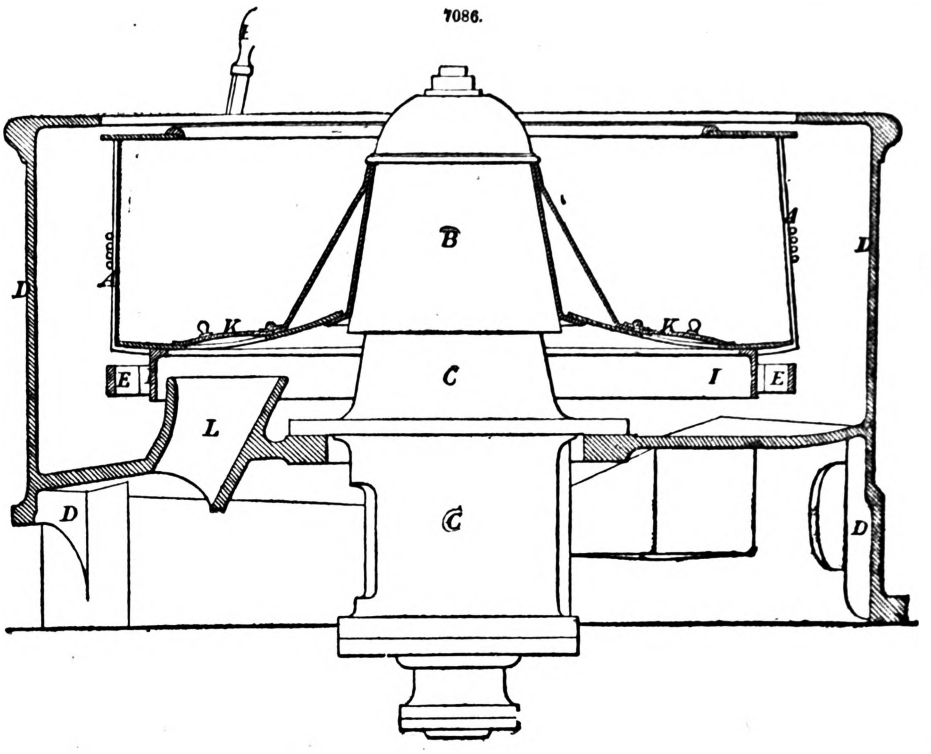

for small estates, and it also can be worked independently of all other machinery except the boiler. The machine comprises a revolving basket A, usually made of wire and carried by means of the cast-iron dome B on a central shaft arranged with driving pulley, footstep, and neck-bearing, on the central bracket C, the whole supported by the outer cast-iron casing D, which collects the water or liquor thrown off from the material in the basket, and conveys it away through a discharge-pipe. E is a brake for stopping the motion of the basket, and is applied by the lever-handle H acting upon the angle-iron ring I riveted on to the cylinder bottom. K, K, are two copper doors covering openings in the cylinder bottom, through which sugar may be discharged, passing down the shoot L cast in the outer casing into a suitable receptacle placed below to receive it.

A machine of 3½ ft. diameter would be driven from 800 to 1200 revolutions a minute, according to the work to be done. At 1000 revolutions a minute, a machine of this size would exercise a centrifugal force of 600 times the weight of the load, and at 1200 revolutions 865 times the weight of the load; thus 1 cwt. of material in a basket going at the rate of 1000 revolutions a minute would, by the centrifugal force imparted to it, bear a weight or pressure upon the periphery of the basket of 1 cwt. × 600 = 30 tons, and at 1200 revolutions 1 cwt. × 865 = 43 tons 5 cwt.

Fig. 7087 illustrates a Lessware's machine by J. and H. Gwynne, London, the arrangement for driving being very much like that shown in Fig. 7083, only inverted. This machine is very compact, and being self-contained requires no expensive foundation. The basket, instead of being made of wire gauze stiffened by vertical ribs, consists of three casings, the inner being formed of thin copper perforated as closely as possible; round this is a casing of wire gauze, and outside these two is a sheet-copper casing, in which the holes are somewhat larger and farther apart. In the ordinary basket the sugar is liable to stick in moist lumps opposite the vertical ribs in consequence of the meshes of the gauge being closed by them; but in this case Lessware has successfully removed that objection.

7087.

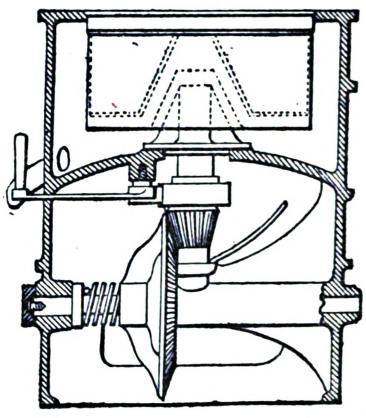

The baskets of centrifugals driven from beneath are usually hung on cones, as shown in dotted lines, Fig. 7087, and are either kept in place by a screw and nut at the top, or, in some cases, by a button, or similar catch, turned by hand; the latter arrangement is for the purpose of removing them as soon as the sugar inside is cured, and replacing them with others already charged with raw sugar; but this method has many disadvantages. As the wire gauze of the basket is liable to become clogged, especially when working with sugar of a low quality, a steam jet is fitted to the inside of the outer casing, which being turned on while the empty basket is slowly revolving, effectually cleanses the wire. In Figs. 7088, 7089, is shown an arrangement for this purpose invented in 1849 by Finzel, of Bristol, which consists

of a chamber A whose length is equal to the depth of the basket B, and which is perforated with a series of holes, so that when the steam is let on through the cock C, it impinges on the entire surface of the basket as it revolves.

The speed at which the basket of a centrifugal should be driven is generally reckoned at 10,000 circumferential ft. a minute. Thus a 48-in. centrifugal is speeded for about 800 revolutions a minute, a 36-in. machine having to make about 1060 revolutions in the same time.

The amount of sugar that can be cured at one time by a centrifugal, say of 48 in. diameter, varies considerably with the quality. For large-grained sugar some makers put in as much as the basket can conveniently hold, or about 4¼ cwt.; but most prefer from 2½ to 3 cwt. for a full charge, as it is cured more speedily and effectually. With low sugars a charge of half the above quantity is sufficient. With large-grained sugar three or four minutes, and sometimes even less, is sufficient to cure a charge; but low, sticky sugars require very much more time, or from twenty minutes to half an hour. If a very pale-coloured sugar is desired, a small quantity of hot water, or, what is better, clarified syrup, may be poured in after the molasses has been as far as possible driven out.

7088.

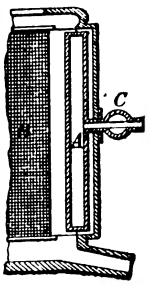

7089.

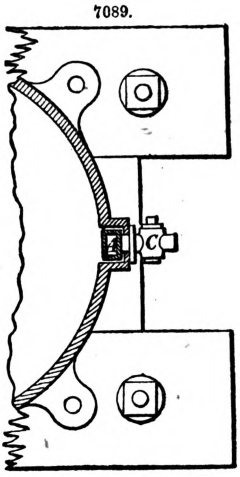

7090.

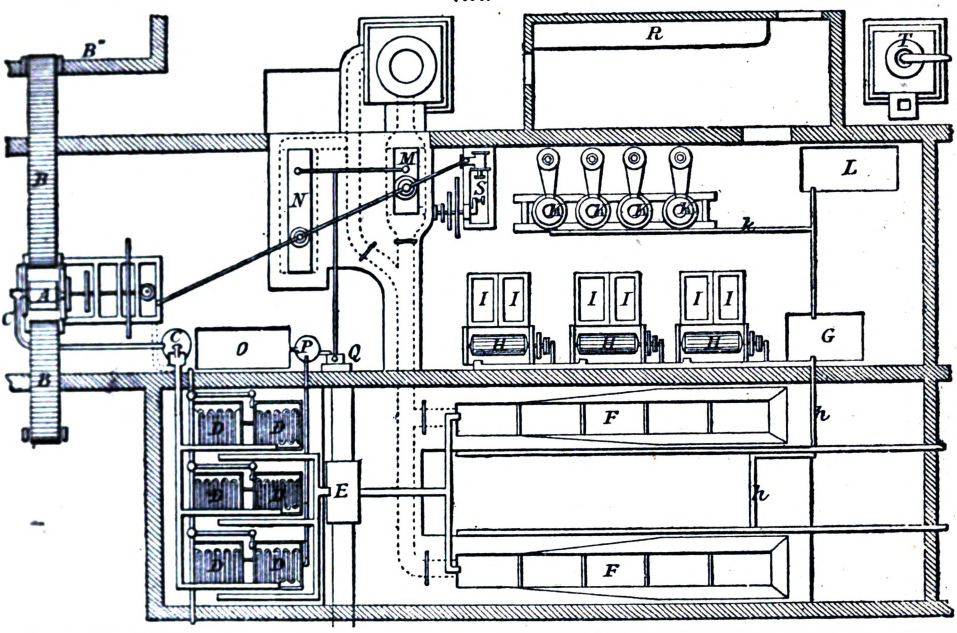

Fig. 7090 is a plan of a sugar-house, in which the apparatus already described are shown in their respective places. The cane-mill A is supplied with a cane-carrier B and trash-carrier B^1, which leads to the trash-house B^2, usually a long narrow building with a tramway running along the middle, and as high up as the roof will admit. The expressed juice runs along the gutter *c* to the monte-jus C, where it is elevated into the clarifiers D, which are placed at a sufficient elevation to allow the juice to descend through the various vessels until it arrives in the coolers by its own gravity. The clarified liquor is conveyed by the gutters *e* to the filter E. From thence it runs along the gutters *f* into the batteries F, where it is concentrated to about 27° Beaumé; when it is allowed to run along the gutters *h* into one of the Wetzel pans H, or if these are full, into the cistern G, whence it is pumped into the Wetzels as required. When fully concentrated the syrup is let down into the coolers I by movable shoots. Here it is allowed to stand until cold, when it is cured in the centrifugal machines K, from whence it is removed to be dried on the bench R. The molasses from the centrifugals is conveyed by the gutter *k* either into the cistern G or tank L; into the former for the purpose of being re-concentrated, or into the latter for supplying the still-house. In order to economize fuel a tubular boiler M is fixed in the flue of the batteries, as shown in dotted lines, the waste heat from the furnaces of which is sufficient to supply the whole of the steam required. When it is not desirable to work the boiler the heat may be conducted into the chimney by the flue *m*. The boiler N is for the purpose of supplying steam when the batteries are not being worked. The tank O is placed on columns as high as the roof will admit, and is used for washing out the clarifiers and batteries. The small cistern P to which is

attached a donkey-engine Q, is for the purpose of receiving the condense water from the clarifiers and returning it to the boilers; the tank O supplying any extra quantity of water that may be required. The engine S is for driving the centrifugals, Wetzels, and any other machinery that may be required. A still is shown at T, and the situation of still-house is by the broken walls.

SUN-WHEEL. Fr., *Mouche;* Ger., *Laüfgetriebe;* Ital., *Ruota planetaria;* Span., *Rueda para cambiar el movimiento.*

See Mechanical Movements.

SURVEYING. Fr., *Arpentage;* Ger., *Feldmessen;* Ital., *Agrimensura;* Span., *Agrimensura.*

Surveying and Levelling.—All surveys may be classed under one of two heads, namely, those which are carried out without the aid of an angular instrument, and those in which one or more instruments are employed. The principle upon which all surveying is based, is that of dividing the area to be included in the survey into a certain number of triangles, the relative position and accuracy of which are capable of being ascertained or checked, as it is termed, by more than one independent method. Of all geometrical figures the triangle is the only one which cannot change its shape without at the same time altering the length of its sides. Provided the length of its sides be constant its form is immutable. It must not be imagined, however, that the adoption of this form ensures necessarily accurate measurement or renders errors in chaining of no consequence. Whatever geometrical form may be selected for subdividing the area of a survey, the necessity for proof or tie-lines is absolute. The time placed at the disposal of the surveyor must, to a great extent, modify the scale of precision to which he intends adhering, and the exact nature of the survey and the purposes for which it is intended will also materially influence him. When a survey is required for building purposes, where every foot of frontage is of value, extreme accuracy is not only desirable but absolutely necessary. In the simplest cases, these comprise merely the accurate measurement of a quadrangular piece of ground, which includes the frontage and rear of the proposed buildings. Upon the most extended scale they embrace the survey of large estates, the laying out of the necessary roads and routes of intercommunication, the marking out of the course of the drains, the gas and water pipes, and the taking of the levels to ascertain the contours of the ground.

Planning a Survey.—By the phrase planning a survey is meant the acquisition of that knowledge of the ground and its principal features, which will enable the surveyor to design in his own mind the general method upon which he intends to proceed. For this purpose he must make in all cases a preliminary reconnaissance, and the principles which should guide him, are similar to those already laid down in our article Railway Engineering. Accompanied by a guide, the surveyor must walk over the ground, carefully noting all the prominent objects which may be suitable for stations, and making a rough sketch in a note-book. Whether a map of the district is procurable or not, this walking over the ground should never be omitted; but where such assistance is not obtainable it must be performed more thoroughly and extensively. A surveyor should, before commencing his field-work, have the general outline of the survey, and the general distribution of the main triangles, roughly plotted in his imagination.

Thus while a map of the county is a great convenience, and a saving of time and trouble, it is not indispensable, as a general resemblance to the actual plan of the locality is all that is really of importance. The main object sought, is the cutting up or dividing of the area to be surveyed into a number of triangles, always as far as possible consistent with the accurate determination of the various objects to be included in the survey. Upon the selection of the main or base lines depend the facility and ease with which the survey may be conducted, as well as the time which it will occupy. While the system of lines laid down must always vary with the particular shape of the parish or estate to be surveyed, yet, as a rule, the longer the lines the better, and the nearer they approach to boundaries and fences the less need will there be of offsets and subsidiary triangles. At the same time it would be a serious error to spoil a well-conditioned triangle for the sake of running one of its sides along a fence. This should be avoided, as it is not an uncommon practice, and is an example of unscientific work. A well-conditioned triangle is one in which the angles are neither very acute nor very obtuse, and in laying out triangles it should be endeavoured to make them as nearly equiangular, and consequently equilateral, as possible. This is in many cases impossible, but the principle should not be lost sight of. The advantage of keeping the triangles as nearly as possible in conformity with these rules, is that the further the figure of the triangle deviates from the equilateral, the greater will be the error incurred, if some of its dimensions be a little out. A glance at Figs. 7091, 7092, will demonstrate the difference between a well and an ill conditioned triangle. In compound or instrumental surveying, which has been treated of in Geodesy, ill-conditioned triangles are not of so much importance as in simple chain measurements, but in every case their employment is to be avoided.

7091.

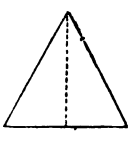

7092.

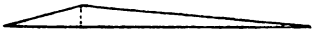

7093.

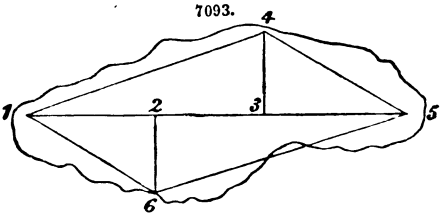

To distinguish base lines from others of a less important character, they are sometimes termed station lines. A station is the point where any main or base line commences or terminates. It may thus occur not only at these places, but anywhere along a main line wherever another line, perhaps a tie-line, may commence or end. This will be understood from Fig. 7093, which repre-

sents a piece of land to be surveyed by the chain. In the first place a base line from 1 to 5 is measured as nearly as possible through the centre of it, and the two triangles 1, 4, 5, and 1, 6, 5, constructed upon each side of it, to take in the boundaries. The two tie-lines to check the accuracy of the measurements are measured from the points 2 and 3, which are therefore stations upon the main or base line 1 and 5. There are in the figure six stations in all, and it will be shown, when we treat of the field-book, that they are distinguished by particular marks, not only for the purpose of preventing confusion, but also for the sake of guidance in plotting the work. As a general principle, liable to some exceptions, the best plan is to measure a base line the whole length of the survey, as nearly through the centre as convenient. Upon this construct as many subsidiary triangles as possible, taking care to tie them in to the main line where necessary. The diagram, Fig. 7093, is an example in point. There are, however, numerous instances where to follow this course would entail superfluous labour, and the surveyor should know how to vary his triangles to suit each particular occasion.

In Fig. 7094 is represented an estate the form of which is not adapted to the same system of lines as would answer for the example, Fig. 7093. Those shown are sufficient to determine all the points. Thus taking A B for the main line, and plotting it on paper, the point C is obtained by the intersection of the lines A C and E C, or at least supposed to be correctly obtained. It will be seen that it will be checked by another line. Having determined the point C, the point L is next obtained from K and B by the intersection of lines K L and B L. To find D we sweep a circle with the radius B D, and another with a radius equal to L D from L. If all the measurements be correct, the distance between the two points C and D will be found equal to that measured, which will close the survey. Although not absolutely necessary, it would be well worth the time to continue the line H J to D, which would, in case of error, determine at once which of the points, C or D, was wrong.

7094.

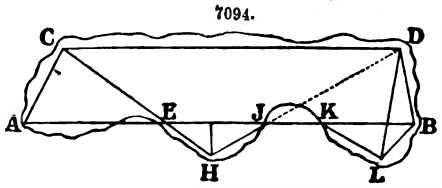

Surveying Chains.—A description of these, as well of the other instruments employed in the operations of surveying and levelling, will be found under Surveying Instruments. Our reasons for preferring the chain of 100 ft. in length to the standard chain of 66 ft. have already been given in Railway Engineering. On the continent of Europe steel tapes are preferred to chains. They have the advantage of not being so liable to stretch; but on the other hand, they are apt to become bent and even broken in bad and uneven ground, and when there is much cover in the way. As the length of a chain varies with the temperature, and also in order to provide for the readjustment of its length after it has been stretched by use, a standard length should be laid down in the immediate locality in which any survey of considerable extent is being conducted. Copings of walls, and platforms of railway stations, form convenient places upon which to mark the standard length. Should those not be available, a couple of stout stakes may be driven into the ground, and sawn off flush with it. Upon their saw-cut surfaces the standard length may be accurately marked. It is not a bad plan, as an additional precaution, to drive a third stake in the centre, and mark on it a point corresponding to the exact middle division of the chain. In testing the chain, care must be taken that the rings are quite free from dirt, and the links perfectly straight, so that the chain may play freely along its whole length.

Chaining Base Lines.—The method of doing this has already been described under Geodesy, when great care and accuracy are necessary, as in extensive trigonometrical surveys. The method is the same, whatever description of measure may be adopted. For the usual purposes of surveying, the ordinary iron or steel chain, when carefully handled, is quite sufficient.

Laying Off Perpendiculars with the Chain.—After measuring straight lines accurately with the chain, the next elementary operation is to set out a line at any angle with a given line, or to ascertain the angle between any two given lines. In small surveys, where the chain alone is employed, this is usually confined to setting out lines at right angles to a given or base line. The chain, the old cross staff, the optical square, or any angular instrument of a more complicated nature, may be used for this purpose, and the extent and importance of the line to be ranged or set out, must determine the method to be used. Where the line is short the chain may be employed for the purpose, but it is not so expeditious a mode as that by the optical square. It, moreover, involves a little manipulation, in which an error may be made, whereas the optical square performs its task with mechanical fidelity. In Fig. 7095 let A D be a base or any given line, and it is required to erect a perpendicular at C, in the direction C E. Measure off C B equal to 30 ft., fix one end of the chain at B, and let it be firmly held there. Fix the ninetieth link at C, leaving ten links loose, as shown by the dotted line C H. Take hold of the central brass, or fiftieth link of the chain, pull taut, and fix a pin at F. The line ranged through C F will be a perpendicular to A D at the point C. In books upon the subject this operation is described a little differently. For example, B C is made equal to 40 ft. instead of 30 ft. It is clear that as the line A D is fixed, and its direction certain, it is preferable to make B C equal 30 ft. and C F equal to 40 ft., thus giving a longer line to range out the perpendicular C E, which may equal 100 ft. or more. The chain must be pulled quite taut at F, as the whole accuracy of the proceeding consists in the triangle being rigidly and evenly constructed upon the ground.

7095.

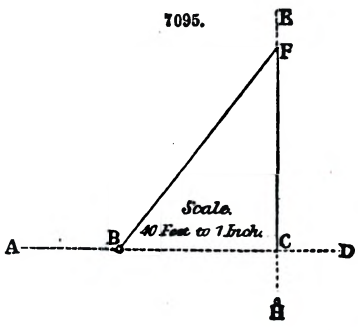

In a ploughed field upon a wet day, with the links of the chain clogged with dirt, some care is required to manage the operation successfully.

Theoretically this simple method of constructing a right-angled triangle upon the ground is founded upon the 47th proposition of Euclid. It will be perceived that $B F^2 = B C^2 + C F^2$ or $(50)^2 = (30^2 + 40^2)$. Reduced to the smallest limits the ratio is $5^2 = (3^2 + 4^2)$, and consequently any decimal multiplication of these numbers yields similarly truthful results. It is, in fact, the construction of a right-angled triangle, in which the relative equality between the hypothenuse and the remaining sides is given in integral numbers. The employment of this method is evidently limited to short perpendiculars, as it is against all principles of sound surveying to range or produce long lines from comparatively short ones. By the figure, the longest line from which to range out a perpendicular to any point C cannot exceed 40 ft., and it would not be prudent to extend this towards E beyond 100 ft., unless only approximative accuracy were demanded. This method is therefore adapted but for very insignificant distances, and, moreover, should not be used for setting out lines at right angles where they are to form subsidiary main lines of a survey. It will answer well enough for building up small triangles upon existing base or main lines, in order to get in the irregular boundaries of winding rivers or unsymmetrically-shaped woods and fences. The accuracy of the point F may be checked by an angular instrument, in order to satisfy the surveyor that the method is, first of all, a correct one, and, secondly, that he can do it correctly on the ground.

Laying Off Perpendiculars with Instruments.—A very ancient instrument for laying off perpendiculars to a given base line is the cross staff, which has been superseded by the optical square. This useful little instrument is a pocket sextant denuded of its divided arc and one mirror, and with the other fixed permanently at an angle of 45° to the line of direct vision. It is a pocket sextant capable of reading only an angle of 90°. Its essential feature is a small reflector, which is silvered on its lower half but left plain upon its upper, thus admitting of direct vision through the latter, whilst any object can only be seen by reflection upon its lower part. Suppose it be required to raise a perpendicular at any point of a given line. Select any object in the line, and, standing over the point to which the perpendicular is required, look through a hole in the instrument provided for the purpose, until that object is seen clearly through the upper or unsilvered portion of the mirror. Direct an assistant to take a ranging rod and walk in the direction of the perpendicular, until the rod seen by reflection from the silvered or lower portion of the mirror, appears to coincide with the object, or until the two objects, the one seen by direct and the other by reflected vision, overlap, as it is termed. If the object be also a ranging rod, the overlapping of the two will be very distinct, and the position of the perpendicular obtained with great precision.

Within certain limits this method of laying out perpendiculars is independent of the distance, but if the ground is very uneven it is rather tedious, and, moreover, loses some of its accuracy. When the ground is very rugged and hilly recourse must be had to the theodolite. If, instead of setting out a perpendicular from a given point on a line, it is required to find where upon that line a perpendicular from any given object situated to the right or left of it would fall, the operation is simply reversed. In that case, after having first set up a ranging rod in the line, and sighted it by direct vision, all that is necessary is to walk slowly towards it exactly along the line until the image of the object from which the perpendicular is required, is seen by reflection to overlap the ranging rod. The point where the observer then stands is the position of the perpendicular upon the given line. It is well to let the object seen by direct vision be at least a couple of hundred feet off from the point where the perpendicular is wanted, as the farther off it is situated, the better chance, comparatively speaking, of the accuracy of the result.

Obstructions in Base Lines.—However desirous it may be to run the principal lines of a survey clear of all obstacles and impediments, it is in many instances impossible to do so. In the ranging out of the line it often happens that some obstacle may intervene, which cannot be seen until the line is regularly and progressively chained out, and a near approach made to the impediment. Figs. 7096, 7097, will explain this clearly. It must be borne in mind that the chief object in laying out the main lines of the survey, is to obtain a good series of triangles, and that, provided the line selected is well adapted for this purpose, it would be extremely injudicious to divert it, or break it up, in consequence of a trifling impediment lying in its path. The best line should be selected and adhered to, in spite of all obstacles and impediments, which merely require care and trouble to be successfully overcome. In Fig. 7096 suppose the base line to have been ranged from D to C. From the point D the other end of the base line can be seen at C, and intervening rods can be put up in the line of sight at A and B. There is, however, an impediment in the shape of a house situated right in the line D C, which cannot be seen from either D or C. A reference to Fig. 7097, which shows a section of the ground along the base line D C, will demonstrate the reason of this. The house lies in a hollow, and is evidently invisible from either end of the line. After having ranged out the line, and proceeded with the chaining as far as the first point A, it will be perceived that the house is situated right between A and the next point B, and interrupts the line of sight. Means therefore must be taken for overcoming the difficulty, and for passing the obstacle. At the same time it must not be assumed, that even had it been distinctly seen that the house would intersect the direction of the

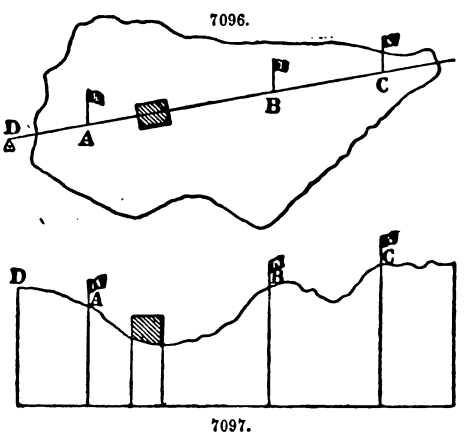

7097.

base line, it should therefore have been abandoned, and another run so as to clear the house. It is true that the actual shifting of the line at the point where the obstacle occurred, might not exceed a dozen feet to one side or the other, but this dozen feet in a base line a mile long would throw the end out to a very great extent, and in all probability render it useless as a main line of the system of triangulation proper to be adopted under the circumstances.

The majority of the methods employed for passing objects which interfere with the direction of base lines, depend upon one or other of the problems of Euclid, including those relating to the properties of similar triangles. The direct measurement should always be obtained where possible, and will in all cases be found more satisfactory. The methods which we are about to illustrate, only apply to examples where the interruption is of a very limited nature. Where long distances have to be determined with accuracy, there is no other plan of ascertaining them than by the use of the theodolite and trigonometrical calculation. One of the simplest instances of an obstruction is represented in Fig. 7098, where it is required to pass a house which is intersected by one of the main lines. The plan to be pursued consists in setting out a line parallel to the main line for a distance sufficient to clear the obstacle, and then resuming the former direction. At some reasonable distance from the obstacle let a perpendicular be laid off with the chain from the point A, and the distance A *a* very carefully measured. At the point B set off another perpendicular B *b*, of the same length as A *a*. The distance *a b* should be of a length proportional to the length of the obstacle to be passed, as it will determine the direction of the parallel line. This is obtained by ranging a line through the points *a* and *b*. After passing the obstacle at the point *c*, set off the perpendicular *c* C of the same length as those already laid off at A and B. The point C will be in the direction of the original base line, and by sighting from C to the next point visible on the main line, the correct direction can be continued. Should it, however, be impossible to see any of the points on the main line previously determined, the direction may be obtained by laying off from *f*, on the parallel line the perpendicular *f* E equal to *c* C. By ranging through C E the base line may be continued until one of the more distant points can be seen. If this operation is carefully performed, it will be found on checking the direction of the next point arrived at, that the deviation will not exceed two or three inches, which may be regarded as practically of no consequence. The essential points to be attended to, are the accurate measurement of the perpendiculars, and the ranging of the parallel line. It would be very imprudent to range a line on, from the other side of the obstacle, by this method, without determining some distant point beyond it, to act as a check upon the direction, for a slip of an inch or two at the obstacle might become a serious error at the end of the line. So long as the two extremities of a line are fixed, it is comparatively easy to maintain the intermediate points in the proper direction.

7098.

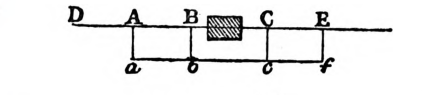

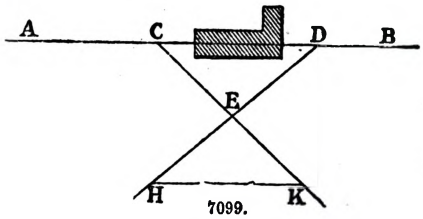

7099.

Whenever the line has been ranged, and its direction fixed by points at each extremity, one of which is visible from any given obstruction, the obstacle may be passed in a simpler manner than that already described, and one which avoids the laying off of the perpendiculars, and the consequent possibility of errors taking place. Let it be required to pass the house in Fig. 7099, situated in the line A B, the points A and B being already determined, and the latter visible from the place where the house stands. At the point C range a line C K, making C E = E K. Then, from any point D in the direction of the base line, range D H through the point E, making D E = E H. The line H K will be equal to the line C D, and the chaining may be proceeded with from the point D, after adding the distance H K = C D to the distance already chained. In performing this operation on the ground, care should be taken to make the triangles as well-conditioned as possible, avoiding all very obtuse and very acute angles. As, within certain limits, the selection of the points C and D is optional, there will be no difficulty in arranging them, so that the triangles C E D and E H K should be of the form required. When these departures from the regular chaining of the main lines take place, it is advisable to make a small sketch in the field-book, showing the obstacle, the distance at which it occurs, and the manner in which it is passed. We have hitherto regarded the obstacles lying in the line of sight of the base line to be of a solid nature. Frequently, however, they are merely superficial, at least so far as the surveyor is concerned, and similar examples are to be found in rivers, lakes, and ponds. In fact, it is impossible to carry out a survey, having any pretensions to size, without encountering some of these impediments. An error fallen into in most of the text-book on surveying, is that of supposing and taking as the basis for illustration, that the line crosses the river or other impediment exactly at right angles with the banks. This is a great mistake, as in nearly every instance it will happen that the line crosses on the skew, and sometimes very obliquely. It is a bad plan to attempt to work out a problem in surveying on the ground, without having previously solved it on paper or in the head. It should first be studied theoretically, and the theory of it satisfactorily demonstrated to be sound, and then it may be safely carried out in the field.

As an example of distance inaccessible to chaining, suppose a large piece of water to be crossed by the base line of a survey, as represented in Fig. 7100. Let A B be the base line, C D the distance required. Standing at C, range any line C E. From D, set off D E perpendicular to the base line, intersecting C E in any point E, and from E set off E F perpendicular to C E, and meeting the base line in F. Should there be any difficulty in getting a sufficient length of line between E and the water to lay off the perpendicular E F from, the object may be accomplished by producing C E to H, and setting off the perpendicular from the prolonged part E H. Having correctly constructed the triangles on the ground, it now remains to calculate the distance required. In the first place,

the triangles D E F and D E C are equiangular, as may be easily demonstrated thus;—Angle C D E = F D E = 90°. Angle C E F = 90° = D E F + D F E. But angle C E F = C E D + D E F, and consequently D E F + D F E = C E D + D E F. Subtracting the common angle D E F from both sides of the equation, we have angle D F E = angle C E D. Consequently the

7100.

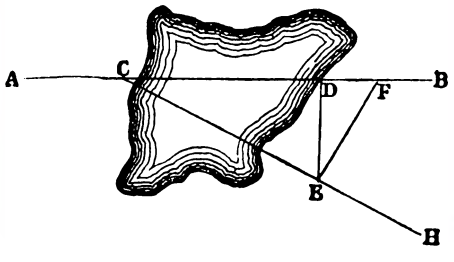

7101.

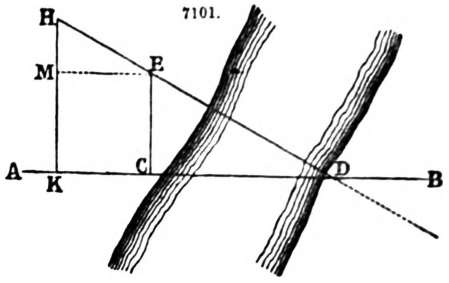

remaining angle D C E in the one triangle equals the remaining angle D E F in the other, and the two triangles are equiangular. By the sixth book of Euclid, we have the following proportion between the sides. D F : D E :: D E : D C. Multiplying extremes and means, we obtain D F × D C = D E² and D C = $\frac{D E^2}{D F}$ the distance required. To take another case, let us suppose a river has to be crossed by the base line A B in Fig. 7101, and the length C D is the measurement wanted. We will first describe the practical part of the operation, that is, the construction of the diagram on the ground, and then demonstrate the truth of it theoretically. Measure the distance K C, range any line D E H, and from the points K and C raise perpendiculars C E, K H to the base line A B, meeting the line D H in E and H, taking care to measure very carefully the length of the perpendiculars C E and K H. The required distance C D will be given by the formula C D = $\frac{C E \times C K}{K H - C E}$. Now for the proof. Draw in the figure the dotted line E M perpendicular to H K. Then the triangles H M E and E C D are similar and equiangular, because since the line H D cuts the two parallel lines H K, E C, by the first book of Euclid, angle D E C = angle E H M. For the same reason, since M E and K D are parallel, the angle H E M = angle E D C, and as the remaining angle in each triangle is each equal to 90°, the two triangles are equiangular. It follows from this that we have the following proportions;—H M : M E :: C E : C D. But H M = K H − C E, and M E = C K. Substituting these values in the above ratio, we have K H − C E : C K :: C E : C D. Multiplying the extremes and the means, we obtain (K H − C E) × C D = C E × C K, and, finally, C D = $\frac{C E \times C K}{K H - C E}$, which is the same as the formula given above. If the distance C D be considerable, and it is desirable to check the accuracy of the operation, the line H E D may be ranged on further upon the opposite side of the river in the direction of the dotted line, and the distances D E, E H having been measured along it, perpendiculars may be dropped from them upon the base line, which should be equal to K H and C E respectively. If this is carefully and correctly performed, the error will be very trifling either in direction or amount. Occasionally, instances will occur where the surveyor must, so to speak, invent a method of his own, but if he thoroughly understand the principle upon which all such problems are founded, he will have no difficulty in applying them to particular examples for which no general rule can be laid down.

Before leaving the subject of horizontal inaccessible distances, a few words may be said respecting one that was of a most important nature and somewhat difficult to obtain, the more especially as minute accuracy was indispensable. The instance in question was the determination of the centre spans of the Menai Tubular Bridge. They are 460 ft. wide in the clear, and as no temporary platform of any description could be erected, it was exceedingly difficult to ascertain the distance by direct measurement. It was, of course, effected trigonometrically, but a plan was formed to obtain it by what might be termed indirect measurement, inasmuch as it did not involve the use of any angular instrument, but depended upon the properties of the catenary. Two plans were put into execution. The first consisted in hanging a strong copper wire from a given height upon each shore, in such a manner that it assumed the catenary curve, and its lowest point just touched the surface of the water when it was quite calm. The level of the water having been accurately determined, the wire was then suspended under precisely identical conditions upon the shore, and the horizontal distance or chord of the arc accurately measured. By the second plan, the span itself was actually measured in a direct manner. For this purpose a number of deal rods were threaded on a rope, and on a calm day gently floated on the water, until they came pretty nearly into the position required. They were then drawn, by means of the rope, into a straight line, and as proper care was taken that their ends were in close contact, the span between the piers was accurately determined. All these three methods, namely, the trigonometrical one and the two just described, tallied perfectly in their respective results. It is evident that there was no absolute necessity for erecting the wire upon shore in order to obtain the length of the span or chord, for as the length of the chain, that is, of the arc, was known, and also the abscissa or versed sine, the chord or span could be obtained by calculation. Tables have been compiled giving their relative dimensions, and it is clear that if the proportions be once known for any three dimensions, they can be ascertained for any multiples or submultiples of them. Thus, if S be the half span of the chain, V the versed sine or distance of the lowest point of the curve below the horizontal line, and L the length of the arc,

then whatever particular case may be selected as a datum, it will furnish a basis for the calculation of others in which the above conditions prevail. If for certain values of S and V, L be found to have a value of x, then if the S and V become equal to $y \times S$ and $y \times V$, the value of L will be equal to $y \times x$. For instance, in the tables of Davies Gilbert, when S = 100, and V = 20, L = 102·6. Consequently when S = 200 and V = 40, then L = 205·2 = length of half chain. The accuracy of this may be checked by the well-known formula, applicable to the determination of the length of a suspension of chain when the chord and versed sine are known. Using the same notation, but bearing in mind that L, in this instance, represents the length of the whole chain, we have $L = 2\sqrt{\left(\frac{S}{2}\right)^2 + \frac{4\,V^2}{3}}$. Substituting in this formula our values, S = 400 V = 40, the equation becomes $L = 2\sqrt{40000 + 2133{\cdot}33}$. From this, L = 2 × 205·2 = 410·4, which is exactly double the half chain found from the tables. A diagram of this is shown in Fig. 7102, which exhibits the deflection of a catenary of the above dimensions.

7102.

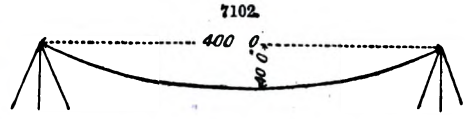

It is evident that in those instances in which the intervening space, which cannot be directly measured, has to be spanned by a structure of iron, great accuracy is indispensable. The ironwork is constructed, and often partially put together, before it is brought to its permanent site. Any discrepancy in the measurements would then be very serious and only remedied at a great expense. In erecting suspension bridges of large span, in which the distance between abutments has to be ascertained by triangulation, or what may be termed indirect measurements, the centre link of the chain is generally the last manufactured, so as to leave room for any slight adjustment in the total length which the direct measurement of the span might render necessary.

Offsets should not exceed 50 ft. or 60 ft. in length, and should invariably be taken at right angles to the main or principal line. Where great accuracy is desirable, or where a long offset is taken to a somewhat important object in the survey, the right angle may be laid off by either the optical square or by the aid of the chain only. Under ordinary circumstances offsets are most rapidly and conveniently measured with a tape, and the eye may be relied upon to give the right angle with sufficient precision for all practical purposes. It may be mentioned that there are two descriptions of tapes; one is usually known as the metallic tape, and has delicate copper wires or threads interwoven with the substance of which it is composed. The other kind is a plain linen tape without any such additional combination. When really good, either of them may be trusted at any time to half an inch. In using a tape in wet weather, or upon any occasion when it gets wet, it should never be rolled up until it is quite dry. Winding up a wet tape and laying it by in its box until it is next wanted, is a certain means of spoiling it. The tape, after being washed, should be coiled loosely up, and after carrying it for a short time in the open air it will be dry enough to wind up. The same remark applies to rolling up a dirty tape.

The same care should be bestowed upon the chain. Unless a chain is properly put up, the links are liable to get strained and bent, to say nothing of the smaller space it occupies and the handy manner in which it can be carried when nicely packed.

7103.

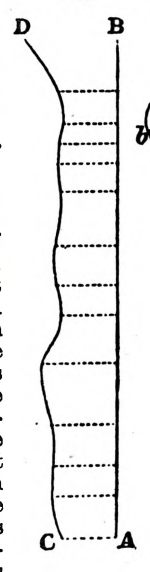

7104.

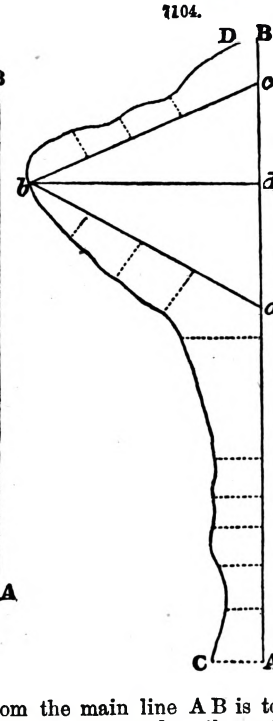

To illustrate the use of offsets in ascertaining the actual boundary of any piece of ground, or any fence that may serve as a division between different plots of land, we select the example, Fig. 7103. Let A B represent a portion of any main line forming one of the sides of any of the principal triangles laid down in a survey, and suppose it be required to determine the figure of the fence C D, the line A B having been plotted upon paper, and the respective distances along it where the offsets are set off having been marked either with the fine point of a pencil or with a pricker, let perpendicular lines be erected at these parts, and upon them the lengths of the offsets laid off. The length of each offset will be the distance from the main line to the fence C D; and consequently these distances having been laid off, the end of each offset gives a point in the fence. If all these points or ends of the offsets be joined by lines, the shape of the fence or boundary will be determined. The dotted lines represent the offsets. The example selected in Fig. 7103 assumes that the main line runs along or skirts the boundary within the prescribed length for offsets. This should always be arranged if possible, but it frequently happens that fences are so irregular as to preclude this ready manner of determining the position of their different points. Sometimes a fence will break away suddenly so as to be beyond the reach of offsets taken from the main line. This case is represented in Fig. 7104; the course to be pursued under the circumstances is shown in the diagram. When the distance from the main line A B is too great to reach the fence by the ordinary offsets, a small triangle must be constructed on the main line, and offsets taken from its sides to the fence. In the figure the triangle $a\,b\,c$ enables the fence

to be got in on the survey. The tie-line *b d* must not be forgotten, as it serves as a check upon the accuracy of the work, as already explained. Although extreme accuracy is not generally needed in taking offsets in the open country, yet in the survey of cities and towns they must be determined very carefully, as the frontages of houses, the areas of gardens, out-premises, and other buildings, depend upon the care with which the measurements are made. Referring to Fig. 7103 it will be seen that there is no necessity for taking more offsets than what are sufficient to obtain every change of direction in the fence, as it is always supposed to lie in a straight line between any two successive offsets.

The offset staff is also used by surveyors, but is only suitable for offsets of very limited dimensions. It is usually about 6 or 7 ft. in length when the standard chain is employed, but 10 ft. is a convenient length when surveying with the chain of 100 ft. At one end of it there should be an obtuse pointed iron ferule with a steel point for sticking in the ground. At the other end there should also be an iron ferule, but without any point on it. Instead, it should have a strong hook attached to the side, and of a size large enough to hold in it the handle of the chain, which renders it useful for dragging it through hedges. Having lined out the length of the offset, the staff is turned over end for end as many times consecutively as may be required to bring it to the point to which the offset is to be taken. For this reason the offsets should be limited in length, as errors accumulate rapidly even with the most dexterous manipulation of the staff. When the offset is about 50 or 60 ft., the measurement with a tape is far preferable, and in every instance its use will be more advantageous than that of the staff.

Measurement of Hills.—In chaining and the measurement of base lines, it has been assumed that the ground has been level, or sufficiently so to cause no appreciable difference between a truly horizontal measurement and that taken along the surface. It is seldom, however, that a base line of any considerable length can be measured, without it being necessary to make some allowance for the sloping and irregular contours of the ground. The necessity for this becomes more apparent as the surface of the ground departs from the plane of the horizon, as the greater the angle of inclination the greater will be the difference between the false and the true, or the inclined and horizontal measurement. There are various methods of arriving at the true horizontal measurement of sloping surfaces, and the degree of accuracy to which the survey is to be carried, must in all cases determine which is to be adopted. It is scarcely necessary to mention that the true distance will always be less than the apparent one, and therefore, when calculation is used, there will always be a reduction to be made. An experienced surveyor is able to tell pretty well by the eye, the allowance to be made in the majority of instances when only approximate accuracy is demanded, and the question becomes reduced to taking the next measurement or chain's length, not from the end of the former, but from a point obtained by making the proper allowance. The diagram in Fig. 7105 will render this operation perfectly clear, but it is one that an inexperienced person will do better not to attempt to carry into practice. In Fig. 7105 suppose the chain to be stretched upon the inclined surface of a hill and extend from A to *a*, but the real horizontal measurement to extend from A to B. The point B where the chain A *a* will intersect the horizontal is found by taking A *a* in the compasses and sweeping a circle until it touches the horizontal line A C in B. If the line B *b* be projected at right angles to A C it will intersect the surface of the ground at *b*, so that the true distance to be measured along the slope by one chain's length is not A *a*, but A *b*. From the appearance of the slope an approximate estimate can be made of the distance *a b*, and the next chain's length is measured consequently not from *a*, but from the point *b*, and so on, as often as may be required. The same process applies to the case of a descent as well as that of an ascent, but it is invariably more difficult to arrive at a correct approximation of the rate of inclination when descending than ascending a slope.

7105.

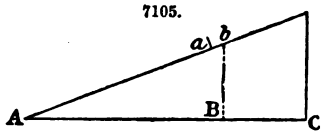

7106.

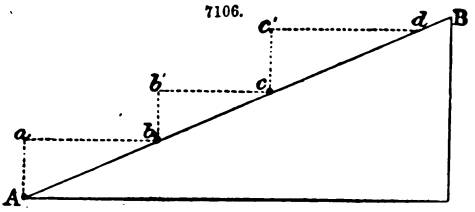

The explanation of the method by which the distance *a b* is estimated will serve to indicate a mechanical mode of arriving at the same result. This latter is preferable when carefully performed to that given in Fig. 7105. It should not, at the same time, be repeated too often consecutively, as small errors creep in at every step. Let A B in Fig. 7106 be the sloping ground to be measured horizontally. The principle consists in taking up the chain in short lengths and holding one end vertically over the starting points, while the other is fixed or held firmly down. In the figure let the surveyor be supposed to stand at A, with the end of the chain held vertically over the point A by means of a plumb-line and bob. In the meantime the leader has hold of the twenty-fifth link, which he fastens down in the proper direction at *b*; the surveyor then slacks the end of the chain, advances to the point *b*, takes up the chain carefully at the twenty-fifth link, leaving the pin in to mark the spot, and holds it over the point *b*, or, in technical phraseology, plumbs it over the point *b*. The leader has advanced to the fiftieth link, which he has fixed at *c*, and the operation proceeds in a similar manner to *d*, and until the summit of the incline is surmounted. The chain must be well stretched between the points at *b' c*, *c' d*, in order to render the deflection inappreciable, so that it is preferable to take short lengths at a time, instead of long ones, although the former may demand more trouble. The steepness of the slope will also regulate the distance between the successive points of measurement, as the chain can only be raised a certain

height by hand, and it is absolutely necessary that it be maintained as nearly horizontal as the circumstances of the case will allow. If this mechanical reduction of the inclined to the horizontal measurement be carefully performed, the result will be a very close approximation to the true distance. Should the hill be very short, the incline may be measured very expeditiously in the manner described by means of a good tape, provided there is very little wind blowing.

Having described the two approximate methods of reducing the sloping to the horizontal measurement, it now remains to indicate the more exact means of obtaining the same result. It is hardly necessary to observe that in large and important national and trigonometrical surveys, approximate methods cannot be employed, but all the operations must be performed with the most minute accuracy. A glance at Fig. 7105 will point out that there are three sides in the triangle A *b* B, one only of which is known. By the rules of proportion, as well as of equations, when one of these indeterminate quantities is to be determined, two must be given in order to solve the question. In the triangle A *b* B, the distance A *b* is given; and if B *b* were known, the horizontal distance could be ascertained, since $(A\,b)^2 = (A\,B)^2 + (B\,b)^2$, or making $A\,b = x$, $A\,B = y$, and $B = z$, we have for the value of A B, $y = \sqrt{(x^2 - z^2)}$. But B *b* is the difference of level between the points A and *b*, which can be readily obtained by levelling, as will be shown when treating of that branch of the subject. If, instead of the distance B *b* being known, the angle of inclination or the angle B A *b* were ascertained, the problem could be solved equally readily. Suppose, for instance, a certain number of feet were measured along the slope in Fig. 7106, from A to B, the correct horizontal measurement of which was A B, but which has to be determined; let $A\,B = N'$, $A\,b = N$, and θ equal the angle of elevation B A *b*. By the rules of trigonometry for solving right-angled triangles, we have $N' = N \times \text{cosine } \theta$, consequently the difference between the horizontal and the sloping measurement varies as the cosine of the angle of elevation, or, in plain terms, with the slope of the ground. The difference between these two measurements, or what is called the reduction, is evidently equal to $(N - N')$. As an example, suppose N or the distance A *b* in Fig. 7106 to measure 100 ft., and the angle B A *b* 15°, what is the value of the correct horizontal measurement A B, and of the reduction $(N - N')$? By the rule we have

$$A\,B = A\,b \times \text{cosine } 15^\circ = 100 \times 0{\cdot}96592 = 96{\cdot}592 \text{ ft.}$$

The reduction, therefore, is equal to $100 - 96{\cdot}592 = 3{\cdot}408$ ft. The correct distance to be entered in the field-book from A to *b* is 96·592 ft., but if there is no necessity for noting the point *b'* on the plan, the simplest method will be to add 3·408 ft. to the 100 ft. already measured, and commence the next chain's length from that point. In other words, 100 ft. on the horizontal measurement equals 103·408 ft. on the sloping surface. From the formula and example we have given, it is readily perceived that tables can be constructed giving the reduction to be made, or the difference between the horizontal and sloping measurement for different angles of inclination. In Table I. is shown the number of feet on a sloping surface inclined at various angles that corresponds horizontally to 100 ft. measured along the given slope, and also the reduction to be made for every chain's length or 100 ft. measured along the slope;—

TABLE I.

Angle of Slope in degrees.	Value of 100 feet measured horizontally.	Difference or Reduction.	Angle of Slope in degrees.	Value of 100 feet measured horizontally.	Difference or Reduction.
3	99·862	0·138	16	96·126	3·874
6	99·452	0·548	18	95·105	4·895
7	99·254	0·746	20	93·969	6·031
10	98·480	1·520	23	92·050	7·950
12	97·814	2·186	27	89·100	10·900
14	97·029	2·971	30	86·602	13·398

If the slope continue uniform, and there are not any fences or other objects to be noted in the field-book, the chaining can be continued as far as may be considered desirable, and the results in the third or sixth columns given in the Table multiplied by the number of chains measured. The product will give the total reduction or difference to be allowed for.

The Field-book.—There are but two descriptions of field-books in ordinary use at present, and one of these is fast becoming obsolete. This latter is about the size of a demy 4to, and in it the triangles, lines, and offsets, together with the fences, rivers, buildings, and other physical features of the ground surveyed, are actually sketched. The dimensions are written alongside the various lines and offsets, and the whole is in fact a mere sketch-plan. The other field-book and the one to be preferred, consists of an ordinary pocket-book opening lengthways, with a couple of red lines about ¾ in. apart, ruled in a longitudinal direction down the centre of every page.

7107.

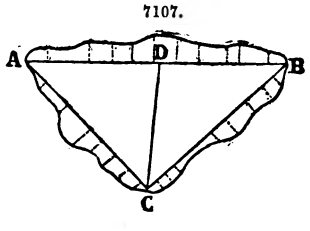

If Fig. 7107 represent a field to be surveyed according to the lines and offsets there laid down, it represents also the manner in which the measurements and lines would be sketched out in the first of the two field-books under mention. There would be in addition, of course, the dimensions of the different lines, which would be entered alongside of them, or sufficiently close to them to indicate to which they belong. Judging solely from the small example given in Fig. 7107, this description of field-

book would appear to leave nothing to be desired; but it is one matter to have to survey a single field, and another to undertake a duty involving many hundred fields, together with a large number of buildings. The great difficulty in using a sketch note-book, where the survey is on a large scale, is to avoid confusion. Omitting all further consideration of the sketch field-book, let us now pass on to investigate the other description. Referring to Fig. 7107, we are required to survey the field shown thereon, and record the measurements in the field-book so that they may be accurately plotted therefrom, and the true figure of the field drawn upon paper. In the first place it must be borne in mind that the field-book is commenced at what would, strictly speaking, be considered the last page. The object of this is that the surveyor is always looking in the direction of the line he is going, both in the field and in the field-book. The meaning of stations has already been explained as those points wherever any of the lines constituting parts of the triangles begin or end. There are various ways of distinguishing them. We prefer a small triangle with a dot in the centre, more especially as it is the same mark used by the English Ordnance engineers for distinguishing their trigonometrical stations. Commencing at A, the surveyor puts up a rod or pole at B, or any object already existing there will answer the purpose, provided it is straight and can be seen from A. After stretching out the chain in the direction of the line A B, he takes his offsets at the points shown. Returning to the field-book, Figs. 7108 to 7110, he enters in the space between the ruled lines the distance along the line where the offset occurs, and to the right or left of the space the distance in feet or links, according to what measure he is using, from the line A B to the fence or other object. This distance constitutes the offset. As the surveyor is advancing from A to B, all the offsets will be on the left-hand side of the line, and consequently plotted to the left of the space in the field-book. On arriving at 208 on the line A B, the end of the tie-line C D comes in upon the right-hand side of A B. According to what has been already stated, this constitutes the point 208 a station, and it is therefore entered as such in the field-book. The remaining lines and offsets are obtained and entered in the same manner, and the converse of the problem is to transform the contents of the field-book into the diagram represented in Fig. 7107. This is the simplest case that could possibly occur in surveying, but although the field-book becomes rather more complicated where the survey embraces large estates and towns, yet if the principle be once thoroughly understood, the more difficult examples will give no trouble afterwards.

7110.

	D	△ at 208 of Line AB
	△	
	213	
	0	
From C	△	to D
	A	
	△	
	288	
8	262	
22	239	
19	186	
40	170	
39	135	
21	108	
30	85	
29	47	
10	18	
	0	
From C	△	to A.

7108.

	B	
	△	
	412	
16	381	
25	335	
20	312	
28	278	
33	235	
40	208	△ End of Line C D
25	190	
28	133	
30	100	
13	68	
15	28	
8	0	
From A	△	to B

7109.

	C	
	△	
	305	
10	282	
8	268	
13	253	
	200	
30	140	
18	92	
30	60	
20	35	
	0	
From B	△	to C

The simple case to which reference has been made, the offsets were all taken on the same side of the main lines composing the triangle, but there might be objects situated on both sides of those lines. If the line, for instance, crossed a road or fence, there would be part of it upon the right-hand side and part of it on the left, and at the point where the crossing took place the offsets would, so to speak, change from the one side to the other. There is just one little detail that has to be attended to here, which will render the plotting of fences, roads, and other objects crossed by the main line of a survey sufficiently intelligible. It must be borne in mind that the space in the field-book enclosed between the two longitudinal lines in reality is supposed to represent the main line itself, and consequently it is advisable not to have a thickness greater than an ordinary ruled line upon paper. At whatever angle therefore the line may cross the fence, it will always appear as if it crossed it at right angles. This is shown in Fig. 7111, where a fence is represented as crossing the main line twice; once at 230 and again at 265. The direction of the fence, or the angle at which it crosses, is obtained by the offsets taken on each side as near the crossing of the fence as may be convenient. In the figure the offsets at 225, 245, and 280 determine the direction of the fence with sufficient accuracy for all practical purposes.

7111.

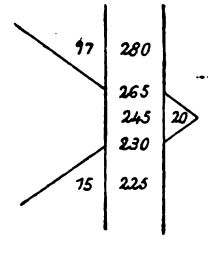

7112.

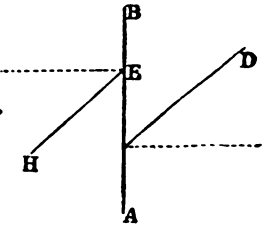

In addition to marking, by means of the station point we have chosen, the positions of the junctions of lines with others, it is advantageous to know in what direction they proceed, without having the trouble of laying down a number of tie and other lines to determine it. Suppose in changing

the line A B we run a line from C in the direction C D, and another in the direction E H, it is well to know when marking off the points C and E upon paper, on what side of the perpendicular line those lines respectively lie. Let Fig. 7112 represent the portion of the field-book belonging to Fig. 7113 in which the distances C and E correspond to 350 and 700 ft. respectively upon the main line A B. The direction of the lines C D and E H is indicated by affixing a little arrow to the station point, pointing to that side of the right angle upon which the end of the lines is situated.

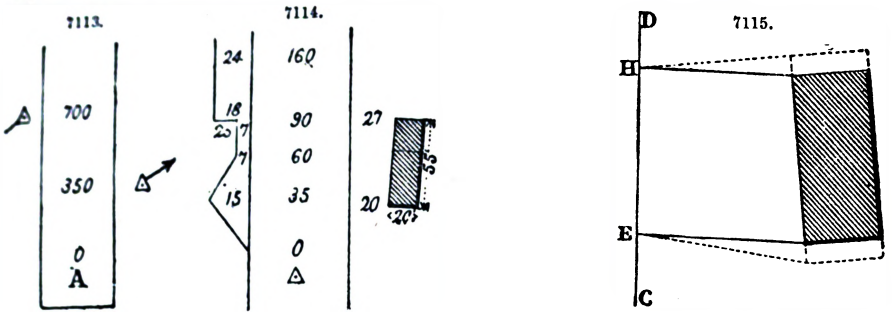

Whenever a fence makes a bend at right angles to the main line there are evidently two offsets to be entered in the same line. In Fig. 7114 let the fence bend as shown. Then it is optional whether the first offset be written by itself and the second along the bend, and the total distance to the outer line of the fence be regarded as the sum of the respective distances, or whether the offsets be written instead of 7 and 8, 7 and 25. In the latter case the outside offset, 25, is the total distance to the extreme point of the fence. There is a convenience in making the outside offset represent the total distance, arising from the fact that as the tape is already pulled out for the first measurement, it is only necessary to pull it out a little further to obtain the second, and the two are thus really got at one operation. In the other case, where they are entered separately as distinct offsets in the field-book, the tape must either be rolled up, after taking the first offset, and pulled out again to measure the second, or a mental subtraction of the one offset from the other made to obtain and enter them independently. Mental calculations should where possible be avoided in the field, as there is no check upon them, and it is sometimes very difficult to remember afterwards how they were arrived at. To ascertain the position and dimensions of a house or building as in Fig. 7115, it is only necessary to take offsets at each end, the length of the house being given by the distance along the main line they are situated apart. Although this is sufficient if correctly done, yet a very little error incurred by not measuring the offsets, especially if they be long ones at right angles to the main lines, might make a serious difference in the actual length of the building. Let us suppose that the position of a house is accurately represented in Fig. 7115, with respect to the main line C D, by the offsets from E and H being correctly taken at right angles to C D. But if the offsets were, as they might easily be through carelessness, taken in the directions of the dotted line, then the house would occupy the position shown by the dotted lines, and its length would be increased about a third more than the actual dimension. The proper way is to first take the offsets in the ordinary manner, and then measure the building all round. This is the more necessary, as in country districts buildings are not always constructed square, and frequently there is a very appreciable difference in the length of the back and front. Should a building, with a number of outhouses, such as barns, sheds, cow-houses, and other descriptions of rear premises, be enclosed by a fence or wall, it will be found a simpler and preferable plan to take the offsets only up to the enclosing wall or fence, and make a separate survey of the area and buildings within. In an extensive survey, also, it is the usual practice to first measure the main lines without taking any offset whatever. They are then laid down upon paper, and if the survey close, that is, if they agree both in length and direction, and the triangles also, they are then chained over again, and the offsets taken in the ordinary manner. The reason of this manner of proceeding is obvious. As it is always possible errors may occur, let us suppose a base line a couple of miles in length measured, and the position of objects in its vicinity determined in the ordinary manner by offsets. Now upon plotting the triangles, it is found they will not close, and consequently some errors have been made. Upon examination, it is discovered that the position of the above line is wrong, that it has, in fact, been incorrectly ranged. The result is, that the whole of the time and labour expended in taking the offsets is lost, and the only thing to be done is to draw the pen across the pages of the field-book and start afresh.

Traverse Surveying.—A traverse is the survey of a polygonal figure commencing at any given point, and terminating at the same. In tracing this circuitous route it is necessary to measure the lengths of the sides, and also the angles between them, before a plan of it can be laid down. Referring to the lines in Fig. 7116, let a survey be required of the area contained between the stream and the road. Set out the lines A B, B C, C D, ... N A; measure the lengths of the sides and the angles, and it will be evident that the figure may be laid down on paper. The method of procedure in the field is as follows;—Starting from a point at which observations can be made on surrounding objects, as at A, set out the lines A a, A O, A B, and plant the theodolite at A. Clamp the limb and vernier-plates at 360°, or zero, and turn the whole instrument round until the magnetic needle lies over the north and south line N S, and clamp it firm in that position. Release the vernier-plate and bring the telescope to bear consecutively on A a, A O, A H, A P, A E, and lastly on A B, clamping the vernier-plate each time; having carefully entered at station A all the angles made by the above lines with the magnetic meridian, and having both clamps firmly fixed, the last reading

being with the telescope bearing on A B, remove the instrument to B, plant it at this station, and carefully level it. Release only the clamp-screw of the limb; the vernier-plate must not be dis-

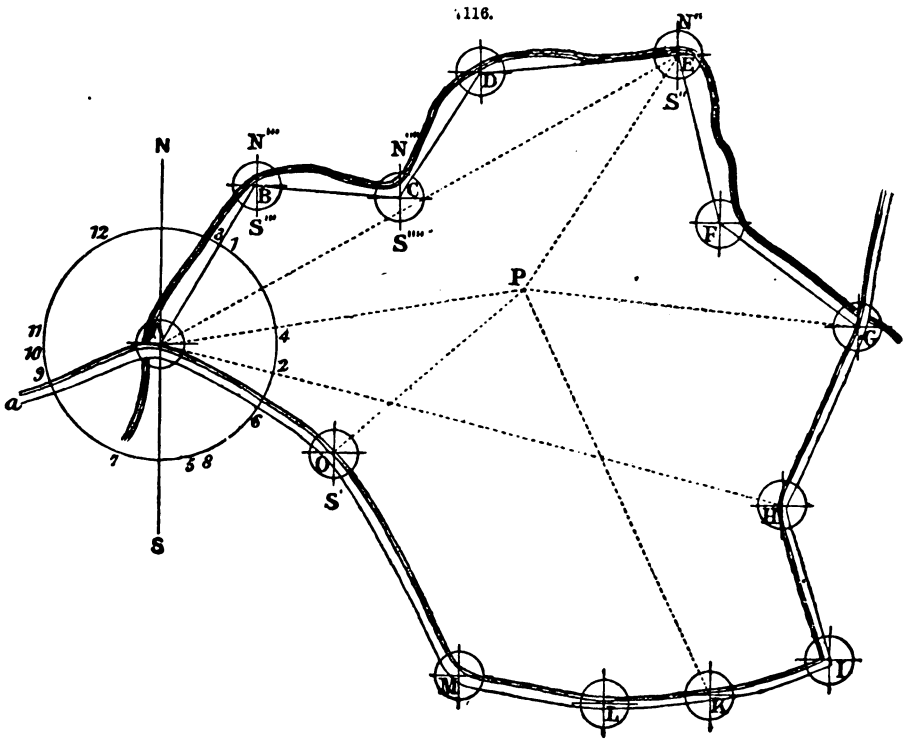

turbed, or the operation will have to be repeated. Now turn the theodolite bodily round, so that the telescope reversed may bear on A, where a man must be left to hold a flag-pole, clamp the limb, and perfect the contact by means of the slow-motion screw S, and examine the readings of the verniers to see that no disturbance has taken place. A few words are now required with regard to the telescope being reversed. This operation places the horizontal limb and the verniers in the same position, with regard to the magnetic meridian, as that which is occupied at A. If, for instance, at A, the bearing of A B was 31° east of north, by doing as directed the theodolite is similarly placed at B, with the same vernier still pointing 31° east of north, and it is the second vernier, lying diametrically opposite, which now points towards A, and reading on the limb 31° + 180° = 211°. Release the upper or vernier plate, and turn the telescope round to bear on C; clamp the instrument; read both verniers to get the mean of the bearing B C, which is here 96° 5′; now move the theodolite to C, release the horizontal limb, turn the instrument bodily round to B, clamp and release the vernier-plate, turn the telescope round to D, and clamp. By reading the angle the bearing of C D is obtained, which here is 30° 5′; proceed in the same manner at D, E . . . M, O, at which station, when the back-sight is fixed on M, and the telescope reversed towards A, the verniers should give exactly the same angle as was read off at A, with the telescope bearing on O; and this because O A marks the same angles with the meridian N′ S″ that A O does with the magnetic meridian N S. If it be so, then the angles have been correctly taken; if otherwise, then their difference is the error committed. Besides taking at A the bearings of A O and A B, those of A *a*, A H, A P, and A E have been also taken. The bearing of A *a* was taken in order to get in the bit of road beyond the bridge, and to show the position of such road in connection with the lands surveyed; and also in case the survey has to be extended in that direction, as then the instrument would be planted at station *a*, and the back-sight fixed on A, in the same manner as directions have just been given for doing at B, C, D. With regard to the bearings of A H and A E, they are taken here only as checks on the work as it proceeds, for it will be observed that E A makes with the meridian N″ S″ at E the same angle west, that A E at A makes east with N S. These observations have equal weight with regard to the bearings A H and H A. The points H and E have been selected at the other end of the survey, and of which full view could be had from A; otherwise any other points, as F, G, or I, would have been taken if convenient. As regards the various bearings on P, let it be observed that these are checks, for if there is any error, these bearings will not intersect at P, when the work is plotted and the bearings A P, E P, G P, are laid off with the protractor. It is necessary that they be taken on some object in a commanding situation, such as may be seen at least at several points. Judgment is required in selecting such points, as they may often be very useful to chain upon in order to fill in interior work, as fences and buildings. On an extensive traverse this should particularly be kept in sight, as it prevents the necessity of having again recourse to the instrument when filling in. It is to be observed that in Fig. 7116 the stations in the road are all shown as in the centre of it; but this has merely been done to avoid confusion, and not to be followed as a rule. On the

contrary, it is to be avoided, inasmuch as all these stations require to be carefully marked, either by driving a picket or making some other mark, which is often very awkward to do in the centre of a road. The stations should therefore be placed somewhere near the road-side, but so that the theodolite can be readily set up. The traverse being thus set out, the sides are chained and the offsets taken in the usual manner. With regard to the magnetic needle, care is required lest it is affected by any local attraction; but by following the above method there will be opportunity to observe this at each succeeding station, as the back angles with the meridian are equal to the forward angles.

There is a considerable advantage in taking from the starting point A such bearings as A H and A E, for it subdivides the larger polygon into smaller ones, as in Fig. 7116, where the figure A B, B C . . . O A is subdivided by the above bearings into the smaller polygons A B, B C . . . E A, and A B, B C . . . H A; we are thus enabled to check the work as it proceeds; for in the same manner the three angles of a triangle are equal to two right angles, and the four angles of a four-sided figure are equal to four right angles; so all the interior angles of a polygon are equal to twice as many right angles, minus four, as the figure has sides. The proof of this may be seen in Figs. 7117, 7118. In the first, let the polygon $a b$, $b c$ . . . $k o$, be divided into triangles, by drawing lines from each angle of the polygon to any point in the interior of the figure; then because the three angles of a triangle are equal to two right angles, we shall have twice as many right angles as the figure has sides, for there is a triangle for every side, and all the angles formed by the lines intersecting are together equal to four right angles; subtracting these, we shall have for remainder twice as many right angles, less four, as the figure has sides.

7117.

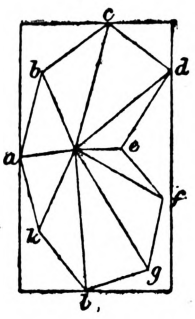

7118.

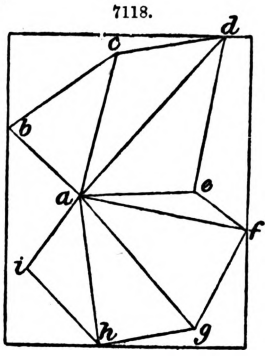

In Fig. 7118 from any point a in the polygon draw lines to each of the remaining angles, as $a c$, $a d$. The polygon will thus be divided into as many triangles as the figure has sides, minus two, for there is only one triangle for each of the two sides $a b$, $b c$, and $a i$, $i k$; and one triangle for each of the remaining. In any case, therefore, multiplying 180° by the number of sides of the polygon, minus two, will give the interior angles of the polygon. Thus in Fig. 7116, where the polygon has thirteen sides, all the interior angles will be equal to 180° × 11, or to 90° × 26 = 360°. In the same manner the angles of the polygon A B, B C . . . E A = 180° × 3, because the figure has five sides; and the angles of the polyglon A B, B C . . . H A = 180° × 6, the figure having eight sides. The rules often given to find the interior angles of the polygon lead rather to confusion than anything else. The simplest way is to carry a small semicircular protractor, about 3 in. in diameter in the pocket, and plot the bearings in the field-work, merely writing in the degrees and minutes inside the several angles; or even to sketch in two lines, at right angles to each other, for the magnetic meridian and the east-west line, and sketch in the bearings as the work proceeds. Many surveyors sketch or roughly plot a traverse in a field-book, quarto size, but it is very inconvenient in wet, stormy weather, when time presses and the work must go on.

Plotting and Plan Drawing.—In plotting a survey, or drawing the plan, a good deal of latitude is permitted to the draughtsman with respect to the manner in which he may fill in the details. The first point to decide is whether the plan is to be coloured or not. As a rule, plans should always be coloured, not merely for the sake of appearance, but for the purpose of displaying the characteristic features of the ground. It will be assumed in future that the plans for which we are about to indicate the proper methods of delineating their respective features will be coloured.

The commonest and yet the most important objects represented in plans, are buildings, including ordinary dwelling-houses, churches, chapels, outhouses, and many others of a similar description. Some of these have a particular outline, but they may be all filled in, as represented, in their different ways. It is frequently not of any importance to ascertain the exact shape or size of a house situated near to the main line of a survey, and all that is necessary is to determine its actual position. In this case it is represented by one of the two forms Figs. 7119, 7120, and it may be filled in according to one of three methods. Although the plan be coloured, yet a house or building may be what is termed hatched, or crossed over with lines drawn in Indian ink, as in the figure. If this method is employed, it should always be borne in mind that the lines should be drawn to a constant angle in every building delineated in the plan, or otherwise a most unpleasing effect will be produced by the want of uniformity. The angle may be either 60° or 45°. These are the most convenient angles to use, as the ordinary set squares are made to them. It is, nevertheless, preferable to colour the buildings in a plan, and the conventional colour is carmine.

7119.

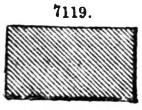

7120.

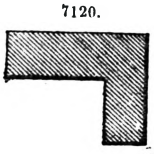

7121.

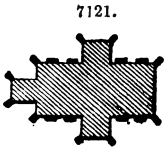

7122.

Buildings may also be coloured with a flat wash of Indian ink, but, strictly speaking, this wash should be confined to the outhouses in connection with dwelling-houses, and indicates an inferior

description of structure. This distinction is maintained in the coloured plans of the Ordnance maps, which are drawn to the enlarged scale of $\frac{1}{2500}$, and is one which is of considerable importance in surveys of land where it is in contemplation to run a line of railway or lay out other large works. As a familiar example, take a farm-house, with its adjoining barns and outhouses. The dwelling-house itself is to be coloured carmine or lake, and the surrounding smaller erections in Indian ink. Churches and chapels are represented in the same manner, but the former have the outline shown in Fig. 7121, and the latter that in Fig. 7122 . Windmills, water-mills, forges, glass and iron works, have also their characteristic conventional sign. Roads of various degrees of importance as routes of intercommunication are tinted burnt sienna, or, what answers better, a mixture of that colour and yellow ochre. A bright yellow, such as gamboge or King's yellow, should never be employed. It should be carefully borne in mind that a plan should never be coloured, but tinted. In delineating roads they may be divided into two classes—fenced and unfenced roads. The former are represented by hard lines, and the latter by dotted ones. A turnpike-road is shown in Fig. 7123, a cross or second-rate road in Fig. 7124, and a railroad in Fig. 7125. Sometimes a railroad is shown by a single thick black line, and it is always thus represented in the parliamentary and contract plans of any proposed line. On the Ordnance map it is shown as indicated in Fig. 7125, and it is preferable so to delineate it, as a thick black line is not in itself sufficiently distinctive. There is one more distinction which it is necessary to observe in the case of roads, and that is, when they are raised over or sunk under the natural surface of the ground, in other words, when they are embanked, and when they are excavated. A

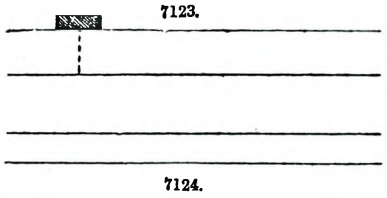

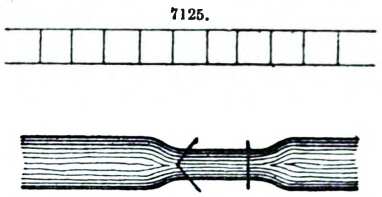

plan and transverse section of both are shown in Fig. 7126*, which need no further description. It is scarcely necessary to make any remark respecting rivers, lakes, streams, ponds, and other examples of pieces of water, as blue is their proper tint, with a stronger shade near the banks. Instead of using a wash, the same effect may be produced by lines drawn with Prussian blue, but for the reasons already given the tinting is to be preferred. A portion of a canal or river rendered navigable, where a lock is placed, is represented in Fig. 7126. When it will not interfere with the other lettering upon a plan, it is always as well to write the word look alongside its representation, as it is thus indicated to those who are not professional men, and may not be acquainted with conventional signs.

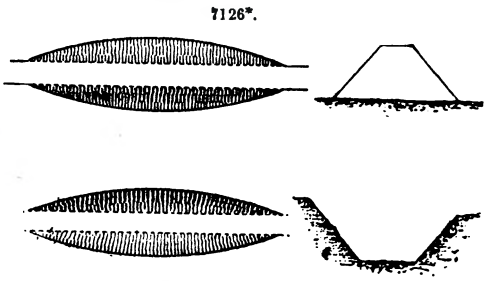

It is undeniable that to a professional eye at least a good plan is self-explanatory. If all the objects are properly and accurately delineated, the conventional tints strictly adhered to, and a correctly divided scale appended, nothing more is required to enable an engineer or an architect to lay it before him, and comprehend the whole of it at a glance. Accuracy and clearness are the two essential points to be borne in mind in the preparation, not merely of plans, but of drawings of any description whatever. It is of the greatest importance to define with all possible precision the various kinds of boundaries or lines of demarcation existing between different portions of land and territory. There are a very large number of boundaries and a corresponding number of conventional signs for individually representing them. For instance, there are parish boundaries, county, union, hundreds, wards, boroughs, liberties, and some others which are pretty nearly extinct at the present day.

The two boundaries most commonly occurring on plans are those of parishes and counties. They are represented respectively in Figs. 7127, 7128, and consist simply of a succession of short straight lines separated by spaces. It is easy to perceive that if carelessly executed, they might readily be mistaken for each other, and it is not an unusual circumstance for such to be the case. To avoid the occurrence of this it is only necessary to bear in mind that the lines delineating the parish boundary are smaller and thinner than those representing that of a county; and, what is of still greater importance, they are equal in length to the spaces between them. In addition to properly delineating these boundaries, it is advisable to write alongside them their names, but this should only be done once, on some convenient part of the map or plan. Boroughs are usually divided into two separate classes, under the heads of parliamentary and municipal boroughs. The former has its limits defined by small circles, Fig. 7127, and the latter by black dots, Fig. 7128. It sometimes happens that the same limits may be the boundaries of several different descriptions of properties. Thus a fence, for instance, might be the boundary of a parish, a parliamentary, and a municipal borough. In such a case the delineation of it would consist of a joint-

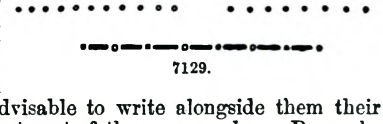

representation of all three, as shown in Fig. 7129. So also for a combination of any other boundaries which are plotted after a similar fashion.

Unless otherwise stated on the plan, a hard line denotes a fence or a boundary between the two portions of land upon each side of it. Ordinary fences are represented by a hard line, and when of stone, a distinction may be made by drawing the latter in red. Some judgment must be exercised in using this colour for the purpose. If the plan has other red lines upon it showing proposed alterations of the existing features of the ground, such as alterations of the course of rivers, or of the direction of roads, which are always represented by red lines, it will be better to draw the stone fences in black, and thus avoid all chance of confusion. In Fig. 7130, suppose A B C D to represent the existing course of a river which it is intended to alter and improve by getting rid of the two elbows in it. This would be effected by making the new cut E F G H shown by the dotted lines. On the plan these dotted lines would be drawn in red, and sometimes the portion of ground included within them is coloured with a light wash of the same tint. Occasionally the lines are simply dotted, as in Fig. 7130, but it is preferable to draw them in red, as the distinction between the existing features of the ground and those resulting from the proposed alteration is at once apparent. The manner in which existing works will be affected by those proposed to be executed cannot be shown too clearly on the plan. The usual method of indicating the crossing of a road or stream by a bridge, is to draw a couple of hard lines across them, and leave the space between them which equals the width of the bridge, uncoloured. At the same time, each bridge, according to its type of construction and the material of which it is built, has its proper conventional delineation. Stone and timber bridges are drawn nearly alike; the former being distinguished by being drawn in red lines, or, if the scale of the plan admit of it, the walls may be lightly tinted of the same colour. A wooden bridge is also distinguished from a stone as well as from an iron one, by having lines drawn closely together across its width to represent planking. The correct manner of plotting an iron bridge is given in Fig. 7131 to the left. A suspension bridge is shown to the right of the same figure, the distinguishing characteristics, namely the suspension chains, are too clearly defined to allow of any room for doubt respecting the individuality of the structure. A drawbridge is shown in the centre of Fig. 7131.

7130.

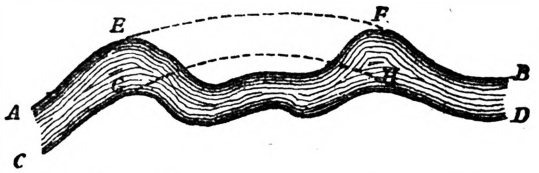

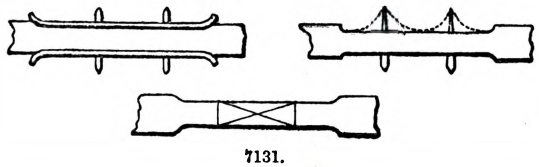

7131.

Enlarging and Reducing Plans.—Of the several methods by which these operations can be effected, that of squares is the most accurate. This consists in covering the original drawing with a complete network of squares, and the copy with a similar network, having the sides proportioned so as to suit the different sizes of the two drawings. Proportional compasses are also used for the same purpose, and so are the Pantograph and Eidograph. Enlarging a plan is a more difficult operation than the reduction of one. The large plans of the Ordnance Survey drawn on a scale of $\frac{1}{2500}$ were reduced to the scale of 6 in. to a mile by photography. The details of the plans so reduced are afterwards traced on copper plates on which the stations have been previously plotted by the lengths of the sides of the triangles. The only method of reproducing any plan or section with complete fidelity is to plot it over again upon the scale which is required.

Levelling.—Surveying may be regarded as the horizontal, and levelling as the vertical measurement of ground, and, in the majority of instances, they are closely connected together. Equally important as the horizontal delineation of the ground is its correct vertical representation. Levelling may therefore be regarded as that art by which we arrive at an exact knowledge of the superficial configuration of the earth above and below any fixed datum. Thus, for example, if the datum assumed is Trinity high-water mark, the height of any point above, or the depth below it, is usually recorded in feet, and decimals of a foot. This is shown in Fig. 7132, where L L represents the line of high-water mark, and the heights of the several points A B C D are marked in feet, and decimals of a foot. Upon the whole, the best instrument for an engineer or surveyor is the Dumpy, or Gravatt's level. The simplest case of levelling that can possibly occur, is that in which it is

7132.

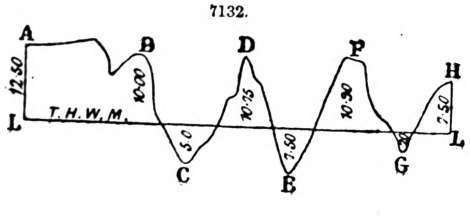

7133.

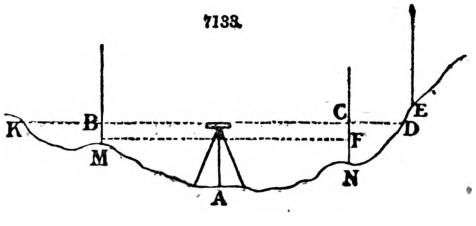

required to ascertain the difference of level between any two points which can both be seen without shifting the instrument. Supposing the two points to be sufficiently near to be within the optical powers of the telescope, the possibility of ascertaining their difference of level by one setting up of the instrument will altogether depend upon the amount of that difference. Fig. 7133 will render this clear. Let it be required to determine the difference of level between the points M and N,

Set up the instrument at A, and take a reading on the staff at B, which put equal to 2·10 ft. Now, if the distance of N from M be not greater than what can be seen by the telescope, turn the level round on its axis, and take a reading on the staff at C, which make equal to 5·35. Bearing in mind that both B C and M F are horizontal lines, it is evident that the difference of level between the two points M and N is equal to the height F N. But F N = C N − C F and C F = B M. Consequently F N = C N − B M. But by the readings C N = 5·35 and B M = 2·10; therefore F N or the difference of level between the two points M and N = 5·35 − 2·10 = 3·25 ft.

It is easy to perceive that when the instrument is once set up and adjusted for levelling, its range of action in that one position is limited. For instance, referring to the diagram with the instrument planted or set up at A, it cannot read a staff placed on any point of ground above the dotted line D K. If it were therefore required to ascertain the difference between the points M and E, it could not be done with the instrument placed at A. The instrument would either have to be shifted between the points N and E, after taking the first reading at B and C, or placed upon some higher ground, which would enable readings to be taken directly upon the staff placed first at one point and then at the other. This will be more fully explained when we treat of ascertaining the difference of level between several points, or what is usually termed making a section. The readings are classed under one or other of two titles. They are either back-sights or fore-sights. They have not necessarily any reference to the direction in which the section is taken, but the back-sight is always taken before the fore-sight. In some instances, where intermediate sights are taken, each fore-sight becomes a back-sight to the next fore-sight, as will be explained in its proper place. In the diagram, B M is the back-sight, and C M the fore-sight, and from them the following universal rule is deduced. When the fore-sight or the sum of the fore-sights exceeds the back-sight or the sum of the back-sights, there is a fall from the first point to the last, and when the contrary occurs, there is a rise between the same points. In this instance, C N is greater than B M, and consequently there is a fall, or the point N is lower than the point M. The maximum difference of level, either rise or fall, that can be observed at one setting up of the instrument cannot exceed the total length of the staff. Let us suppose in Fig. 7134 that the reading taken at A is exactly at the zero of the staff, and that the reading at D is exactly at the top line of the graduations of the staff, then the difference of level between A C equals the precise length of the staff. If the point C be situated lower down, it is evident that the top of the staff would drop below the dotted line, and no reading could be observed. It is barely within the limits of possibility that, in practice, two readings would be obtained of which the one would equal zero, and the other the exact length of the staff, but the illustration is given to show the maximum difference of level that it is just possible to ascertain without shifting the instrument. Besides this, it points out that the setting up of the level is not a matter of hazard or mere chance, but should be regulated according to the position of the points of which the level is required. The more experienced and skilful a surveyor is in selecting the spot where to plant his instrument, the more rapidly will he get over the ground. By setting up the instrument in the most favourable spots he obtains a greater range of the staff, and thus diminishes the number of times of planting the level which would otherwise be necessary. Nor is this all. The chances of errors creeping in are in direct proportion to the number of times the level is shifted between any two points, so that by reducing this number to a minimum, the chances of error are also minimized.

7134.

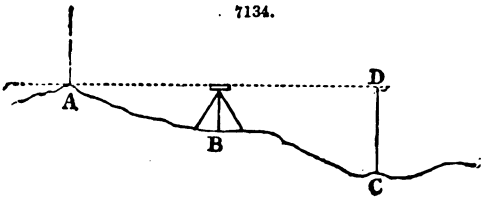

It has been assumed in the three diagrams to which we have drawn attention that the dotted lines were horizontal, and so they will be when the instrument is correctly adjusted. The correct horizontal of the dotted line A D in Fig. 7134, or the similar ones in the other two diagrams, depends, other things being equal, upon the correct adjustment of the line of collimation. See SURVEYING INSTRUMENTS.

Having briefly described the simplest case that can occur in levelling, which consists of taking merely a couple of readings of the staff, we once more pass on to the general case. This includes the ascertaining of the difference of level between any number of points. These relative heights may or may not be referred to any one common point as a datum. As a rule, they are so referred, although it is not absolutely necessary, either for accurate levelling or accurate plotting. Supposing therefore all the points which indicate the respective levels of the different parts of the ground to be joined by lines, the result is a section, or a representation of the vertical inequalities of the ground. In the section relating to surveying, regarded in connection with the horizontal delineation of land, attention was directed to the fact that the field-book might be kept in one or two different ways. So it is with levelling. The level-book, as it is now termed, may be also kept, and is kept in a slightly different manner. Military engineers, moreover, keep their level-books on a system differing somewhat from that of civil engineers. There is no actual difference, so far as principle is concerned, in any of the methods employed, but, nevertheless, when a level-book, reduced according to one system, is put into the hands of a person accustomed only to another, he finds some difficulty in deciphering it and plotting a section from it.

One page of the level-book is usually occupied with the columns, and the other reserved for remarks and such memoranda as it may be necessary to note during the taking of the levels in the field. Sometimes the disposition of the columns is altered. Thus, for instance, the columns of rise and fall are in some books put between those of back and fore sights, but this is a point of no importance whatever, as it is easy to fall in with the arrangement of the columns, and reduce the book with equal facility after a little practice, in whatever manner the relative columns may be disposed. Let us now examine a little into the field book or level-book given in our example. The datum to which the levels are reduced is assumed to be equal to 100·00, a very ordinary and

convenient assumption. The reason of adopting that figure will be explained as we proceed. It is supposed therefore that the first reading is taken on the heel-post of a gate, which is termed a bench-mark, and usually denoted by the letters B. M. This is entered in the column of back-sights as 11·56. At a distance of 100 ft. from the B. M. another reading is taken upon the staff, and entered in the column of fore-sights as 4·69. Let it be supposed now that it is required to move or shift the instrument beyond the distance of 100 ft., so as to get fresh back-sight upon the staff at the same place where a fore-sight was previously taken. The important point now is to be sure that the staff-man, in turning the back of the staff round, does not alter its position with respect to the spot it is held on. Inattention to this particular will completely vitiate the whole section, and render accurate results impossible. Returning to the field-book, the next back-sight will be entered as 6·40, the next fore-sight as 10·72, and so on until the section is finished. The distances are entered in their proper column, opposite the places where the corresponding readings of the staff are taken.

The simplest description of level-book, or that in which the minimum number of columns is required, is represented in the annexed form in Table II.;—

TABLE II.

Back-sight.	Fore-sight.	Rise.	Fall.	Reduced Level.	Distances.	Remarks.
11·56	..	..	..	100·00	0	B. M. on heel-post of gate
..	4·69	6·87	..	106·87	100	
6·40	10·72	..	4·32	102·55	200	
3·15	7·19	..	4·04	98·50	300	In front of house.
7·25	2·40	4·85	..	103·36	400	
8·10	5·16	2·94	..	106·30	500	
7·03	5·23	1·80	..	108·10	560	
11·44	2·91	8·53	..	116·63	600	
5·11	13·24	..	8·13	108·50	645	On coping of wall of chapel.
8·19	4·65	3·54	..	112·04	700	
7·81	11·12	..	3·31	108·73	780	
0·60	9·48	..	8·88	99·85	800	
5·64	7·08	..	1·44	98·41	900	On edge of stream.
12·70	3·33	9·37	..	107·78	1000	
4·15	9·80	..	5·65	102·13	1100	
99·13	97·00	37·90	35·77	2·13		
97·00		35·77				
2·13		2·13				

Reduction of Levels.—Having entered all the readings, and finished what is called the field-work, the next step is the reduction of the book, or the arithmetical checking of the operation. This check must not be confounded with that which is known as checking the levels, which will be referred to in its place. The first thing to be done is to subtract the lesser readings from the greater, and enter the results in the respective columns of rise and fall, remembering that when the fore-sight is greater than the back-sight, there is a fall, and a rise in the reverse case. This being accomplished, the whole columns of back and fore sights should be added up, and the lesser subtracted from the greater, the difference being entered as shown in the example we have selected. Now let the columns of the rise and fall be treated in a similar manner, and if the arithmetic be correctly performed, the difference will be exactly equal to that already obtained in the former columns. It is just possible that there might be a compensating error of the same amount introduced in these two processes, which would consequently not be apparent, and thus the check would be invalid. A third column is therefore required, which would render this balancing error apparent. This is found under the head of reduced levels. By adding to the datum the successive rises and subtracting the falls, the differences between the last reduced level and that datum should equal the difference already obtained. When the three operations check, it may be relied upon that the arithmetic is correct, and the book reduced accurately. It must be borne in mind that all this must be done before any of the section is plotted, or otherwise it would have to be drawn over again if any errors were detected. In some level-books there is a column for intermediate sights, but it will be seen presently that it is not necessary. An intermediate sight is one taken in the first instance after a back-sight, and is in fact a fore-sight, but it differs from a fore-sight, properly so called, inasmuch as the instrument is not shifted, and no second reading is taken at the same place, to serve as a back-sight for the next forward reading.

It has been mentioned that intermediate sights might be regarded in the light of fore-sights, provided they were treated as back-sights for the next reading. In the terms fore-sight and back-sight, it must be borne in mind that they have not necessarily any connection with the position of the telescope at the time of reading them. To some extent they are, in this respect, a misnomer, and are only strictly correct when one sight is taken on one side of the instrument, and the other with the telescope reversed on its bearings. The field-book employed when a column is given to the intermediate readings is reduced in the same manner as that described for the other form. In Fig. 7135 suppose the instrument be set up as represented in the diagram, and a reading taken

off the staff at A, and entered as 13·20 in the column of back-sights. If another reading be taken at B, and the instrument be not shifted until after another reading has also been taken at C, then the reading at B is an intermediate sight, and is entered in the proper column as 5·40. The reading at C is the fore-sight proper, and is entered in its proper column as 8·20. An intermediate sight is therefore, as in fact its name implies, a reading taken anywhere between the readings of the back and fore sight. It follows, as a corollary from the above, that when the instrument is set up, the first sight taken can never be an intermediate, nor can it ever be the last reading before the shifting of the instrument. A glance at the diagram will indicate that the position of the staff with respect to the instrument, has nothing whatever to do with the character of the reading taken on it. Thus it is evident that, speaking generally, any number of readings might be taken between the point A and the point D, where the instrument is placed. All these would be intermediate sights, and entered in the level-book accordingly. The entries in the level-book have therefore no connection with the actual positions of the staff and instrument at the time the sights were taken. It is true that in order to plot the section, the distances at which the sights are taken are noted, but this gives merely the total distance from a starting point, and, by subtraction, that between any two sights. What is to be observed is, that there is no clue to the exact position of the instrument to be deduced from the level-book. There is, however, an approximate clue readily obtainable by inspection. For instance, on referring to the copy of the field-book, it will be seen that after the fore-sight 8·20 was entered there is a new back-sight of 4·30. The position of the staff at the former reading was 100 ft. from the starting point. The position of it at the reading of the next fore-sight is 6·50, and its distance 200. Consequently, as the level was shifted after reading 8·20, it must have been set up somewhere between 100 and 200 ft. from the starting point. The reading 10·70 of the intermediate sight is of no use in determining the position of the instrument, for although its distance is entered as 150, yet the level might have been set up at 130 or 170 without affecting the character of the sight. Referring to Fig. 7135, the reading 10·70 might have been taken between the points A and D, or D and C.

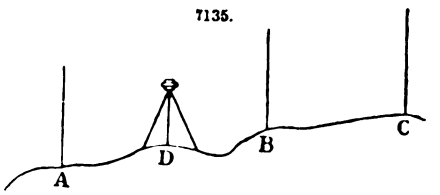

There are various other descriptions of level-books used, but we shall only mention one more. It is very similar to that already given, only it has a separate column for the height of instrument. Sometimes this column is substituted for that of intermediate. Those who are practical levellers are aware that it is impossible to get a sight very close to the instrument by looking in the ordinary manner through the telescope. When the object becomes situated very close to the object-glass, the focus cannot be adjusted for distinct vision. Under these circumstances the usual plan is to run the eye along the outside of the telescope, and note the reading accordingly. When the staff can be seen through the telescope, although not sufficiently clear to distinguish the figures or marks on it, a reading may be obtained by causing the staff-man to run his finger up and down the staff until it comes within the range of the cross wires, when the reading can be afterwards ascertained by the naked eye. Let us now examine into the object of making a column in the field-book for recording the height of the instrument, and find out the advantages of so doing. It is nothing more than taking a reading at the point where the level is set up. The height of the instrument is obtained by measuring accurately the height of the centre of either the object or eye glass from the ground and entering it in the column. The distance of the instrument is also recorded, so that not only is there an additional reading obtained by this method, but the position of the instrument is also accurately determined. This latter detail is sometimes of importance in checking levels when mistakes have been made, and bench-marks are rather far apart. If it is known that the instrument was set up at such and such a spot, it is easy to tell by the eye that it would have been impossible to obtain certain readings of the staff placed at another known point. It may be here observed that if a level is suspected of being out of adjustment, the errors that would arise in consequence, may be neutralized by placing the instrument exactly half-way between the back and fore sights. In fact, wherever great accuracy is required, this precaution is invariably taken, although the instrument may be in perfect adjustment. One reason for pursuing this course is that it renders unnecessary the taking into account the questions of refraction and the influence of the sphericity of the earth upon the readings. In ordinary levelling these questions are disregarded, but it sometimes becomes necessary to take them into account. The errors that, if neglected, they would give rise to in levelling operations, on a scale similar to that carried into execution by the officers of the Ordnance Department in the great trigonometrical survey of the kingdom, dwindle down into insignificance when the object in view is simply the laying out of the route of a railway or canal. So far as these errors and their causes are concerned, the climate and the condition of the atmosphere possess considerable influence. Anyone who has levelled on a very hot day, with a bright glaring sun shining, must have noticed the peculiar appearance the readings sometimes assume, and how difficult it is to adjust the focus of the eye-piece so as to be sure to have no parallax at different distances. That it is by no means an uncommon affair for even experienced professional men to be out in their levels under certain circumstances, is demonstrated by the Suez Canal. The levels of the two seas which it now unites were ascertained by several parties of engineers, who all disagreed in their reports. Some maintained that the difference of level was very considerable—so considerable as to be fatal to the union of the waters, while others said the difference was inappreciable, which has since proved to be the case.

Correction for Curvature.—The two errors incidental to levelling are those arising from the curvature or sphericity of the surface of the earth, and from the peculiar nature of the medium or atmosphere by which it is surrounded. The error resulting from the curvature of the surface of the earth arises from the fact that horizontal lines are not level lines. A strictl leveyl line is

one in which all the points are equidistant from the centre of the earth. From this definition it will be at once perceived that a horizontal line cannot be a level line, since the point at which it is a tangent to the earth's surface must be nearer to the centre of the earth than any other point in its direction. So much is readily comprehensible, but for the illustration and proof of the error we must refer to Fig. 7136. In the diagram let B D be any portion of the surface of the earth, A D a horizontal line representing the line of sight of the telescope of the level, and tangential to the surface of the earth at D, and C the centre of the earth. The points D and B are clearly on the same level, whereas B and A are not. But A appears to be the level of the point B, as seen by the observer at D. Consequently the difference between the true and apparent level of the point B is the distance A B. This distance is therefore the measure of the error due to the sphericity of the earth's surface, commonly called the error due to curvature. It is also called the correction for curvature.

7136.

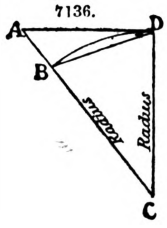

It remains to calculate mathematically the value of A B, which is an unknown quantity, in terms of those which are known. By the proposition, A D is the distance, or length of the sight, practically equal to the arc B D and the chord B D; C B and C D are radii of the earth. From the 47th prop. of the first book of Euclid we have $AC^2 = AD^2 + CD^2$. But $AC = (AB + BC)$, consequently $(AB + BC)^2 = AD^2 + DC^2$. But $BC = DC$; therefore $(AB + DC)^2 = AD^2 + DC^2$. Expanding, we obtain $(AB^2 + 2(AB \times DC) + DC^2) = AD^2 + DC^2$, and equating, the formula becomes $AB^2 + 2AB \times DC = AD^2$. The value of A B by this equation would be represented by $AB^2 + AB = \frac{AD^2}{2 \times DC}$, which is a quadratic equation of the form $x^2 + ax = \frac{b}{c}$. The formula is, however, very much simplified by making an assumption very common in mathematical demonstrations. A glance at the diagram will point out that A B must always be relatively very small compared with the radius of the earth B C. The square of A B will be still smaller, and it may therefore be neglected in the calculation, and the equation becomes $AB = \frac{AD^2}{2 \times DC}$. Or putting D for the diameter of the earth, $AB = \frac{AD^2}{2 \times D}$. Bearing in mind that the denominator of the friction is a constant, the correction for curvature is proportional to the square of the distance, a law which is applicable to numerous other instances besides that under consideration. A simple rule for the difference of level is that the correction for the curvature in feet is equal to two-thirds of the square of the distance in miles. This rule is readily deduced from the formula $AB = \frac{AD^2}{2 \times D}$, for expressing both the numerator and denominator in feet, and taking A D equal to one mile, $AB = \frac{5280}{7916}$ = nearly $\frac{2}{3}$.

Correction for Refraction.—The next cause of error will now be investigated. It will be seen hereafter that as they tend in some degree to neutralize each other's effects, they will have to be combined in the total amount of correction to be applied, but for the present, for the sake of simplicity, each will be treated of separately. This second cause of error is known as that of refraction, and is due to the varying density of the atmosphere surrounding the earth. By the laws of optics a ray of light passing from one medium into another of a different specific gravity or density, is bent or refracted in one or another direction, according as the density of the medium into which it enters is greater or less than that which it has left. Consequently a ray of light passing from a higher to a lower level will be refracted in a curve concave to the surface of the earth, since it passes from a rarer into a denser stratum, the density of the atmospheric strata increasing towards the earth's surface. But according also to optical laws, an object is seen in the same direction as that in which the rays of light strike on the retina, and therefore the line of vision will be a tangent to the curve of refraction, and an apparent displacement of the exact level or height of the object will be the result. As this tangent or visual line will be above the curve, the effect of refraction is to raise the object above its true level, and its connection will therefore be of an opposite character to that for refraction. This will be seen from Fig. 7137, where A C, representing the correction for curvature, equals A B in Fig. 7136, and A B equals that for refraction. Calling the former negative and the latter positive, the total correction equals A B − A C = B C. Owing to the uncertain conditions attending the atmosphere, the error due to refraction is not capable of being so accurately determined as that due to the sphericity of the earth, and cannot be expressed by any recognized formula. It may, however, be fairly considered to have an average value of about one-sixth of the former error, and from this assumption a formula for its value may be found. The correction for curvature in feet has, in fact, been found to be equal $\frac{2D^2}{3}$, to calling D the distance in miles. That for refraction is equal to $D^2(\frac{2}{3} \times \frac{1}{6}) = \frac{D^2}{9}$. But since the former is negative and the latter positive, or, for the sake of simplicity and to avoid a negative result, these signs may be reversed. The total correction represented by B C in Fig. 7137 will be equal to the difference of these two fractions. Putting C to represent the total correction for both curvature and refraction, we obtain $C = D^2(\frac{2}{3} - \frac{1}{9}) = \frac{15D^2}{27} = 0{\cdot}55\,D^2$.

7137.

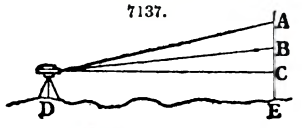

The following is therefore the simple rule for ascertaining the total correction for both causes of

error; "Square the distance in miles, multiply the result by 0·55, and the product will be the total correction in feet and decimals of a foot."

It has been stated that whenever practicable it is advisable to set up the instrument as nearly as possible midway between the back and fore sights. By adopting this precaution the errors due to curvature and refraction are annihilated, since the sum of them will be the same, but the combined effects will neutralize each other.

Boning.—Boning is a rough description of levelling, which is often performed by foremen or gangers in road and railway making. An experienced man, if given a couple of levels at the commencement and termination of a given gradient, will bone the intermediate levels with very great accuracy. Boning is performed with boning rods, which exactly resemble T squares, in the following manner;—

Let A and B, Fig. 7138, be two stakes driven to a certain depth, and according to a given inclination; if on both of these stakes boning rods, of exactly equal lengths, be held perfectly upright, these will be parallel to the incline, and if a third rod be carried along the intended slope, the top of it will be in a line with the top of the other two, if the incline be correct; if it is above, there will be more to cut away; and if it is below, the excavation will have been made too deep; this method is certainly but approximate, quite sufficient to guide the excavators for a time.

7138.

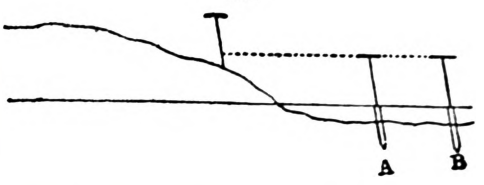

Contours and Hill Shading.—When the ground is horizontal, the signs which we have given are quite sufficient to represent the country by the outline and relative position of every object; but when the ground is no longer level, new signs become indispensable to complete the plan, so as to make it convey exact ideas of the hills, valleys, ravines, and other undulations of the surface. A plan should therefore fulfil these two conditions; first, represent the ground so as to enable us to ascertain the relative height of the different points, and to judge of the nature of the slopes; second, give a figure of the ground that will immediately afford an idea of its character. The first condition requires geometrical methods, whilst the second can only be obtained by combinations of shades. The geometrical method consists in supposing the ground intersected by horizontal planes; the projections of these intersections, or horizontal contours, are then transferred to the drawing at their reduced size. Procure a stone somewhat resembling a hill, as may frequently be found; fix it with clay to the bottom of a box provided with a plug-hole, and sufficiently large to leave a space free between the stone and its case. Fill the box with water stained with Indian ink, and let it off, by means of the plug, about a quarter of an inch in depth, at several times, allowing sufficient intervals for the fluid to stain the stone in that plane, 4, 3, 2, 1, it has fallen to at the last abstraction. These stains will present a series of horizontal lines or contours, 4, 3, 2, 1, all round the surface of the stone, as shown in Fig. 7139; and if we examine the stone thus prepared, looking down upon the top, we shall see that the steepness and the flexures of its sides will be accurately marked by these contours, which might be said to form a scale of relative steepness.

7139.

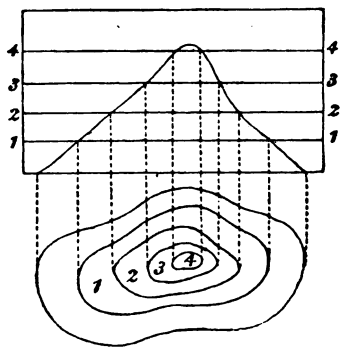

7140.

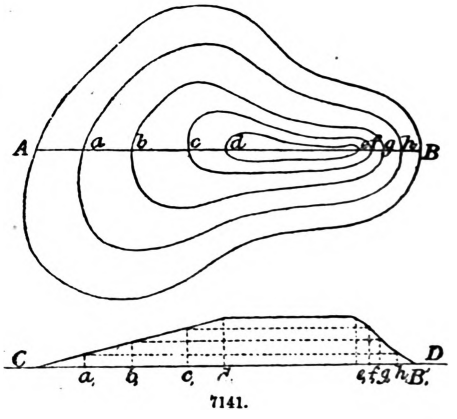

7141.

The level of the water constitutes a horizontal plane, therefore those contours are the intersections of the stone by parallel horizontal planes. What is said of a stone may be said of a hill, or of any surface, and those horizontal contours will give us a geometrical representation of the ground. But if we suppose the horizontal planes of section to be equidistant, we can at once, being given the altitude of one point and the equidistance, find the altitude of another point. The inclination of the slopes may also be found by dividing this equidistance by the perpendicular, common to two consecutive contours. A profile of the ground in any direction can also be obtained; the section of the ground along the direction A B, for instance, is found, Figs. 7140, 7141, by carrying on any line C D, distances C a', C b', respectively equal to A a, A b, and drawing through those points a', b', perpendiculars representing the altitude of the contours a, b, c; the lines that connect the extremities of those perpendiculars figure the section. Elevations may also be drawn by the usual method of geometry.

By diminishing the equidistance, the description of the undulations can become very accurate and almost exact. It will therefore vary with the scale of the plan, and the nature of the country surveyed; and the larger the scale, the smaller the equidistance. In the Irish survey of 6 in. to the mile, it was 50 ft. for cultivated parts, and 100 ft. for mountainous and barren districts. In France, as a rule, the ratio between the equidistance and the denominator of the scale is constant, and $= \frac{1}{2000}$, a great advantage is therefore gained, since at whatever scale a plan is made, the same inclination will always be represented by contours equally distant. At the scale $\frac{1}{10000}$, the sections are thus 5 mètres apart; at $\frac{1}{20000}$, 10 mètres, and so on. In exceptional cases only is this ratio altered. Thus, for the most level plains of Champagne, the Ordnance Survey adopted the ratio of $\frac{1}{4000}$, giving an equidistance of 5 mètres, at the scale $\frac{1}{20000}$.

This method of representing the ground answers the first condition which a plan should fulfil, and is now adopted everywhere for engineering purposes. The second condition, as we stated, can only be obtained by combinations of shade; and if the conventions we adopt in order to gain this object are made to depend upon the principle of the horizontal contours, we shall obtain the very important result of combining accuracy with expression. This effect of shade might be produced by adapting the equidistance to the scale and to the nature of the ground, so as to have contours close enough to give a shading. If, on the other hand, we insert a sufficient number of lines between a few contours determined by levelling, the ground is not faithfully represented; the surface between two such contours has not always a uniform slope, and the space between two contours of the drawing would be a mean surface either enveloping or intersecting the real one. The execution would be tedious and difficult. Hence methods have been devised, some having regard to expression only, others combining expression with accuracy. We may classify them under three heads, the French system, the German system, and the English system. In the French system the hachures are traced perpendicular to the contours, so that the equidistance compared with the length of these hachures will at once give the ratio of the slope. The original contours must therefore be preserved on the plan, and the proper effect of light and shade is produced as follows;—M N, M′ N′, Fig. 7142, being the contours given, the hachures $a\,b$, $c\,d$ are drawn at a distance, $a\,c = a\,b$; the square they form is then divided into two equal parts by $a'\,b'$, and the rectangles $a\,b'$, $a'\,d$ arising therefrom are again divided into two.

7142.

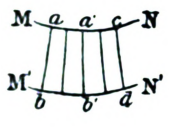

7143.

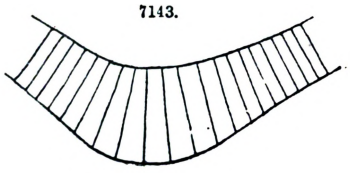

7144.

7145.

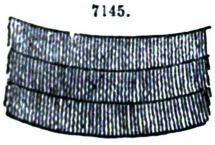

7146.

7147.

By this process the hachures are at a distance from each other $= \frac{1}{4}$ of their length, and in the practice the etching is thus expeditiously done. Should not the contours be parallel, Fig. 7143, the hachures are drawn so as to meet them at right angles. This, however, becomes difficult when the contours are far apart, and beginners will find it more easy to pencil intermediate contours in sufficient numbers to have them nearly parallel, and the hachures are afterwards kept at the proper interval. When the distance between the contours is very small, it becomes impossible to draw three hachures in the square; they are then made thicker and kept at equal intervals, as in Fig. 7144. The effect of shade they produce will thus harmonize with those of less rapid slopes. This should be done as soon as the distance of the contours is less than about $\frac{1}{10}$ of an inch, and the smaller this distance the thicker the etched lines should be. In order to preserve on the drawing the traces of the original contours, which are always useful to find altitudes, the hachures of a slice should not be the continuation of those above A, but should be made to correspond to the intervals of the slice immediately above; and to avoid the bad effect B produced by lighter spots, they should be exactly terminated at the contour C, Figs. 7139 to 7141. In order to secure a uniformity of shade for all plans, scales of thickness or diapasons have been adopted. In the diapason of the French Ordnance Map, Fig. 7145, the ratio of black to white is equal to the tangent of the slope multiplied by $\frac{3}{2}$. For a slope of 45 degrees the proportion of black to white is thus 3 : 2. All slopes steeper than 45 degrees are represented as escarpments. The French system, we have said, combines accuracy with expression, but is not expeditious. It is the best for engraved maps. In the German system the hachures are also perpendicular to the normal contours, with or without reference to their equidistance.

In the system of Lehmann, Fig. 7146, no regard is paid to the equidistance, and the slopes are measured by the angle they from with the horizon. The diapason of Lehmann gives, therefore,

the length and thickness of the hachures from 5 to 6 degrees up to 45 degrees. The latter slope, being impracticable to armies, he represents by absolute black. The ratio of black to white is equal to the ratio of the angle of a slope to its supplement to 45 degrees. Thus, for the slope of 35 degrees, the thickness of the hachures is so regulated as to give a tint in which the black is to the white as 35 : 10, or 7 : 2. In this method the features of the ground are strongly marked, but the tints are too dark, and it is often difficult to read the small writing and see the details. In other German diapasons the maximum of shade is taken for 60 degrees, but these methods requiring the measurement of every angle, are too long in practice. English systems are of two kinds; the horizontal style and the vertical style, both of which had till lately only expression in view. The vertical style, Fig. 7147, has only been employed to obtain expression, and it is not more accurate than the above style, and requires more time. The horizontal style, with some modifications, has been exclusively adopted in all the military schools of the Government since 1867.

Thus, with the scale of 6 in. to the mile, the dotted contours are shown at the vertical distances of 25 ft. for all slopes below 5°, 50 ft. for all slopes from 5° to 10°, 100 ft. for all slopes from 10° to 20°, 200 ft. for all slopes from 20° to 40°.

With the scale of 3 in. to the mile, these distances would respectively be 50, 100, 200, 400 ft. This method is far less simple than the French system, since in the same drawing the distance between the contours is liable to vary. There will, however, always be two defects in all the varieties of horizontal style. The roads, in hilly ground, deviate but little from the horizontal plane, and are not easily distinguished from the horizontal strokes to which they remain parallel. Again, the extreme strokes at the summit and base of a hill cannot be melted into the soft appearance of natural shade. Besides these three systems, there are other methods of hill shading. Brushing with Indian ink is one of them; but it is not susceptible of great accuracy, and is only employed for rough sketches.

To give more accentuation to the features, oblique light has been had recourse to, but it is impossible to represent the real steepness of a slope, since the same slope may be placed in a thousand different positions as regards the direction of light; hence the same slope is differently shaded; it must also be observed that the horizontal surface having to be shaded, the effect is no longer natural.

FIG. 7148.

Back Staff.	Fore Staff.	Rise.	Fall.	Reduced Levels.	Distance in chains.	Remarks.
				39·35		
5·00	5·02	..	0·02	39·33	176	
	4·75	0·27	..	39·60	177	
	6·50	..	1·75	37·85	·60	
	6·06	0·44	..	38·29	178	
	5·82	0·24	..	38·53	·10	
	6·17	..	0·35	38·18	179	
6·30	6·00	0·30	..	38·48	·30	
	4·80	1·20	..	39·68	·80	
	4·92	..	0·12	39·56	180	
	5 50	..	0·58	38·98	·40	
	5 10	0·40	..	39·38	181	
	3·26	1·84	..	41·22	182	
9·29	5·81	3·48	..	44·70	183	
	3·04	2·77	..	47·47	184	
	2·70	0·34	..	47·81	·85	
	5·50	..	2·80	45·01	·87	Bed of stream, 2 in. water.
	2·91	2·59	..	47·60	185	Peg in Farm road.
7·32	7·60	..	0·28	47·32	·06	Centre of Farm road.
	9·54	..	1·94	45·38	·19	Bed of stream, 3 in. water.
	6·50	3·04	..	48·42	·25	
	5·51	0·99	..	49·41	186	
27·91	17·85	17·90	7·84	10·06	Rise.	

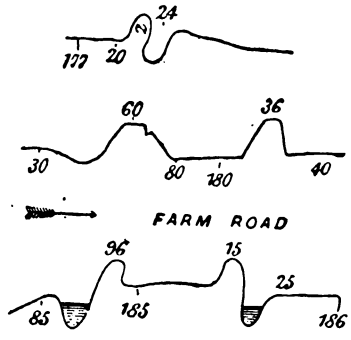

Plotting the Section.—In plotting a section, the first care is to obtain a perfectly straight datum line. This is best obtained by stretching a fine silk thread from one point to the other, and making points along it at such distances as can be conveniently connected by a straight-edge. The vertical distances at which the rises and falls occur, as shown in the level-book in Fig. 7148, are plotted as represented in Fig. 7149. The gradients, if the section be intended for a road or railway, are then laid down. They are obtained by taking the difference of heights between the two ordinates at the two extremities, and dividing it into the distance or length of the gradient. Thus, in the example in Fig. 7149, there is a gradient of 1 in 120 laid down. The thick black vertical line or ordinate is marked 42·00, and supposing the ordinates to be 100 ft. apart, we have at the end of a horizontal distance of 600 ft. a rise of 5 ft., and if we look at the ordinate at that distance, it will be seen that its vertical height is 47·00. The difference between the reduced level of the ground and that of the gradient height, or the formation surface of the road or railway, gives the height of the embankment or depth of cutting, as the case may be. Although in the section in Fig. 7149 the ordinates are shown at regular distances of 100 ft., yet they must be erected at every point which

corresponds with a distance registered in the column of distances in the level-book, Fig. 7148. Having plotted all the heights on the ordinates, the points are joined, and the section of the ground

7149.

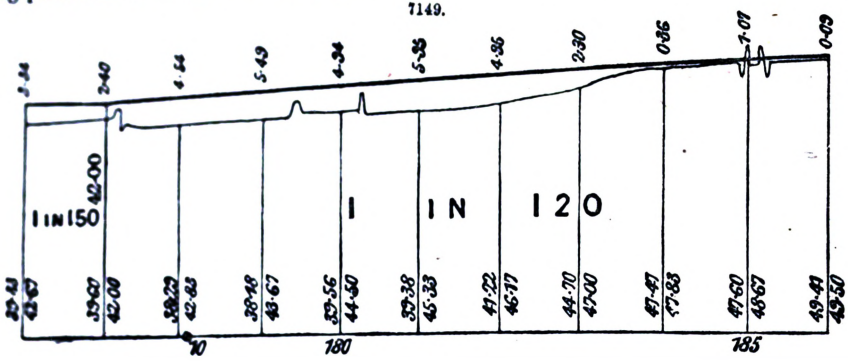

thus obtained. In commencing to lay down the gradients, there are always some fixed points which guide the engineer in his selection, as has been already observed in Railway Engineering, in treating of the choice of route for a line of railway.

In conclusion, it may be remarked. that however excellent may be the maps available, yet if a really accurate survey is required, the only reliable method is to have the ground surveyed and plotted to the actual scale desirable in the particular instance. A corrected plan, that is, one which has the omissions inserted, the superfluities erased, and the necessary alterations introduced, is rarely to be depended upon. In the majority of cases it gives absolutely less trouble to survey the ground, than to correct an imperfect plan of it already existing. Moreover, a corrected plan never gives that thorough satisfaction and confidence which an engineer feels in one which he has made himself.

See GEODESY. RAILWAY ENGINEERING.

Works upon Surveying;—Adams (G.), 'Geometrical and Graphical Essays,' 8vo, 1813. Ainslie (J.), 'Treatise on Land Surveying,' 8vo and 4to, 1849. Bourns (C.), 'Principles and Practice of Surveying,' 8vo, 1867. Smith (J. A.), 'Treatise on Land Surveying,' crown 8vo, 1869. Nesbit's 'Practical Land-Surveyor,' 8vo, 1870. Merrett (H. S.), 'Land and Engineering Surveying,' royal 8vo, 1871. Gillespie (W. M.), 'Treatise on Land Surveying,' 8vo, New York, 1872. Lieut.-Gen. Frome, 'Outline of a Trigonometrical Survey,' 8vo, 1873. Haskoll (W. D.), 'Practice of Engineering Field Work,' 8vo.

SURVEYING INSTRUMENTS. FR., *Instruments de l'arpenteur*; GER., *Messinstrumente*.

All surveying instruments are intended for measuring horizontal, vertical, or angular distances. Of the many varieties of these which have been used from time to time, it is our intention to describe only those which experience has proved to be the best adapted for modern practice, both at home and abroad.

The Chain.—A partial description of this simple but indispensable instrument has been given in Surveying and Levelling, but there are a few points with reference to it which belong strictly to the present article. The correct length of a chain should be that from out to out, that is, from the outside of one handle to the outside of the other. Oval-shaped rings are far preferable to round ones, and there are always in the best made chains three of these rings between each link. At a distance of every ten links on each side of the centre of the chain there are similarly marked pieces of brass, so that the brass, as it is termed, at forty links from the one end corresponds with that at forty links from the other. These mark respectively forty or sixty links, according to the end of the chain whence the counting is commenced. At the centre of the chain the brass is perfectly plain, with no nicks or cuts in it. To every chain ten pins or arrows are attached, pointed at one extremity, and having an eye at the other. In order to test a chain, it should be stretched out straight, and a weight of about 30 lbs. hung at one end, the other being made fast. On removing the weight the chain should return to its original length, or if a new one, very nearly so.

Tapes.—Measuring tapes are made either of linen, or of linen interwoven with fine brass wire, and called metallic tapes. It is stated that the metallic tapes stretch more than the linen ones, but this is doubtful. Tapes are apt to fray at the edges, especially if they are slightly too large for the box, an occurrence which sometimes happens when new tapes are put into old boxes, or when they are carelessly wound up. A good box will last out many tapes. In winding up a tape, it should be allowed to run through pretty closely between the middle and fore finger. If this be not done, it is liable to get twisted or doubled up inside the box; and if in drawing it out, it be forcibly pulled out, it gets very much damaged. The proper plan in such a case is to unscrew the winding knob, and take the tape out of the box through the aperture at the centre. Tapes are also made of steel, but require careful handling, as they are liable to snap.

Instruments for Measuring Angles by Reflection.—Of these the box sextant and the prismatic compass are the most useful. The former instrument is represented in Fig. 7150, and forms, when shut up, a box, having a depth of 1½ in. and a diameter of about 3 in. When observations are being made, it is held in the hand, and requires no other support. It will read, by the aid of a vernier, angles to a single minute, and when once thoroughly adjusted, does not become easily disarranged. In using the sextant, the lid or cover A is first unscrewed, and then screwed on to the bottom of the box, forming a handle with which to hold the instrument. Many sextants are provided with a telescope T, which is then drawn out, and the dark glasses having been lowered by means of two small levers, the instrument is ready for observation. B is an index arm, having at its extremity

a vernier, of which thirty divisions coincide with twenty-nine of the divisions upon the graduated limb L. As the divided spaces upon the limb each denote thirty minutes, or half a degree, the angles observed are read off by means of the vernier to a single minute. The index is moved by turning the milled head C, which acts upon a rack and pinion within the box. To the index arm is attached a mirror, called the index glass, which moves with the index arm, and is firmly fixed upon it, so as to have its plane accurately perpendicular to the plane in which the motion of the index arm takes place, and which is called the plane of the instrument. This plane is identical with the plane of the face of the instrument, or of the graduated limb L. In the line of sight of the telescope is placed a second glass, called the horizon glass, having only half its surface silvered, which must be so adjusted that its plane may be perpendicular to the plane of the instrument, and parallel to the plane of the index glass when the index is at zero. The instrument is provided with two dark glasses, which can be raised or lowered by means of two little levers, so as to be interposed, when necessary, between the mirrors and any object too bright to be otherwise conveniently observed, as the sun. The eye end of the telescope is also furnished with a dark glass. In order to adjust the horizon glass of the instrument, first put the dark glass in front of the eye end of the telescope. Look through it at the sun and move the index arm B backwards and forwards through a small angle, on either side of zero, until the reflected image of the sun pass over the image seen directly through the horizon glass. If the one image exactly cover the other, so as to constitute in reality but one image, the horizon glass is in adjustment, that is, it is perpendicular to the plane of the instrument. But if this should not be the case the key K must be unscrewed from the place it occupies, and applied to a screw on the top of the instrument, which acts upon the horizon glass, and turned until the adjustment is effected.

7150.

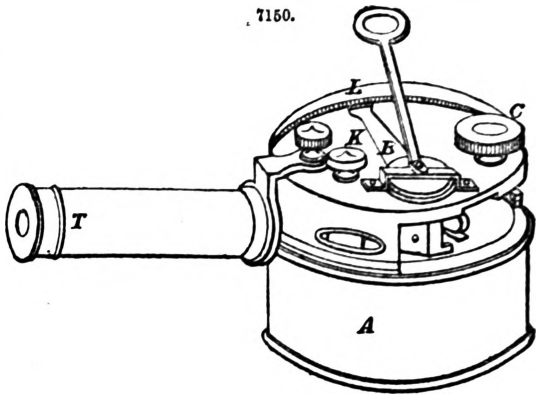

To ascertain the index error, after making the adjustment just described, make the reflected image of the lower limb of the sun to coincide with the direct image of the upper limb, and take the reading of the vernier, and suppose it to be in front of the zero mark. Then move the index bar back beyond the zero mark of the divided limb L until the reflected image of upper limb of the sun coincides with the direct image of its lower limb. If the zero of the vernier on the index arm be now exactly as far behind the zero mark on the divided limb L, as it was previously in front of it when making the other observation, so that the two readings are identical in value, but of opposite sign, the instrument is in perfect adjustment. But if not, half the difference of the two readings is the amount of the error, and is called the index error, being a constant error, for all angles observed by the instrument, of excess, if the first reading be the greatest, and of defect, if the second reading on the arc of excess be the greatest. In the former case the true angle will be found by subtracting the index error from the reading of the instrument at every observation, and in the latter by adding it.

This error can be removed by applying the key *k* to a screw in the side of the instrument, and turning it gently till both readings are alike, each being made equal to half the sum of the two readings first obtained. When this adjustment is perfected, if the zeros of the vernier and limb are made exactly to coincide, the reflected and direct image of the sun will exactly coincide, so as to form but one perfect orb, and the reflected and direct image of any line, sufficiently distant to be unaffected by parallax, as the distant horizon, or the top or end of a wall more than a mile off, will coincide so as to form one unbroken line.

To obtain the angle subtended by two objects situated nearly or quite in the same vertical plane, hold the instrument in the right hand, and bring down the reflected image of the upper object by turning the milled head C till it exactly coincides with the direct image of the lower object, and the reading of the instrument will give the angle between the two objects.

To obtain the angle subtended by two objects nearly in the same horizontal plane, hold the sextant in the left hand, and bring the reflected image of the right-hand object into coincidence with the direct image of the left-hand object.

7151.

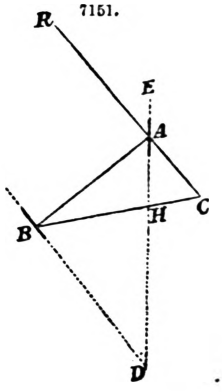

The box sextant is essentially a reflecting one, and in consequence its principle is founded upon the same data which govern all instruments of a similar character. The results of all reflecting instruments are based upon the fact that the deviation of a ray of light after reflection at the index glass and that called the horizon glass, is double the angle of inclination between the two glasses. This will be rendered clear by a reference to the diagram, Fig. 7151. Let A represent the index glass of a sextant, which is moved by the index arm as required, and B the horizon glass which is fixed permanently in a plane perpendicular to that of the instrument. The angle of inclination between the two glasses in any one given position will therefore equal in the diagram the angle A D B. If we imagine R to represent a ray of light impinging upon the mirror A, it will be reflected from A to B, and by the laws of optics the angle of incidence R A E will equal the angle of reflection B A D. On arriving at B, the second mirror, the ray of light will

be again reflected in the direction B C, making, according to the same law, the angle A B F equal the angle C B D. The total deviation of the ray of light is measured by the angle A C B, and by the conditions of the problem this must be equal to twice the angle A D B, or that between the index or horizon glasses.

In the two triangles A H C, B H D, the angle A H C equals the angle B H D, and consequently the remaining angles H A C, H C A of the one triangle equal the remaining angles H B D, H D B of the other. But the angle H B D, being the angle of reflection, equals the angle A B F, which is the corresponding angle of incidence. This latter angle being the exterior angle of the triangle A B D, equals the two interior and opposite angles H D B, B A D; therefore the angle H B D equals the angles H D B, B A D. From above the angles H A C, H C A = angles H B D + H D B; therefore substituting for H B D its value of the angles H D B + B A D, we have the angles H A C + H C A = angles B A D + 2 H D B. But the angle B A D, the angle of reflection, equals angle R A E, the angle of incidence, which is equal to angle H A C; therefore the remaining angle H C A or A C B equals 2 H D B, or the angle of deviation of the ray equals twice the angle between the glasses. This angle is practically equal to that subtended by the object and its image at the eye of the observer. The difference between it and the actual theoretical angle is usually called the parallax of the instrument, which may be altogether eliminated by properly handling it. When the eye of the observer, the centre of the index glass and the object, form three points in the same straight line, this error becomes reduced to zero. In order to obviate the necessity for first registering an observation and then doubling it to obtain the angle required, the divisions on the arc or limb are marked double what they really represent, so that the correct angle is read off by the vernier at once. In reading the angle, care should be taken to bring the microscope perpendicularly over the vernier, or else the true reading will not be obtained. A reading taken on the skew will not be accurate.

The sextant is not applicable to objects which do not lie approximately in the same horizontal or the same vertical plane. Strictly speaking, the two objects, the angle between which is required, ought to be situated exactly in the same plane, but a little departure from this rule is of no practical inconvenience. The observer, even if his eye be no guide to him, can always tell in taking the angle whether this condition is fulfilled or not, as he will be obliged to incline the sextant to one side or the other, in order to obtain the necessary overlapping of the objects. This is a point that requires attention, for angles observed between two objects situated widely out of the same horizontal or vertical plane, are incorrect, and a survey so conducted will not close properly. We have known considerable errors arise from ignorance and neglect of this necessary precaution. This is one of the points in which a sextant is inferior to a theodolite. Should it, however, be absolutely indispensable for want of another instrument to find with the sextant the horizontal angle between two objects which are not situated in the same horizontal plane, the actual oblique angle may be observed, and the true horizontal angle deduced from it by spherical trigonometry. This is a case that rarely occurs in practice, and one that should be sedulously avoided.

The pocket sextant offers a ready method of laying off right angles, for by setting the vernier to 90°, it really becomes to all intents and purposes an optical square. This latter instrument is a small sextant with the mirrors fixed at the angle of 45°, and incapable of recording any other. The mirrors of a sextant after some use get very dirty. The best way to clean them is by the use of a small light brush. A telescope, as already observed, is frequently attached to the instrument, but it is of very little practical use, and only complicates its manipulation. When once in thorough adjustment a sextant, with proper care, will last so for a very long period.

The Prismatic Compass.—As this instrument can be used either in the hand or with a tripod stand, and with it angles can be observed with great rapidity and tolerable accuracy, it is especially valuable to the military surveyor. It is also well adapted for filling in the details of a large trigonometrical survey, and was used for this purpose by those engaged in making the English Ordnance surveys. It is represented in Fig. 7152, and forms a small and compact instrument. Referring to the figure, A is a compass card usually divided to every 20′, or third part of a degree. Underneath the card is a magnetic needle, turning upon the agate centre B. The vibrations of the card when playing freely can be checked by touching a small spring in the side of the box. The sight-vane D has a fine thread stretched across it, which should bisect the point under observation. The sight-vane is mounted on a hinge-joint, which enables it to be turned down flat in the box when it is out of use. E is a prism attached to a plate sliding in a socket, so that it can be raised or lowered as required. It is also mounted on a hinge-joint, and can be turned down into the box. The prism is attached to a plate F, which projects beyond the prism, and has a narrow slit, forming the sight through which the vision is directed when making an observation. On looking through this slit, and raising or lowering the prism in its socket, distinct vision of the divisions on the compass card immediately under the sight-vane is soon obtained, and these divisions, seen through the prism, all appear, as each is successively brought into coincidence with the thread of the sight-vane by turning the instrument round, as continuations of the thread, which is seen directly through the part of the slit that projects beyond the prism.

7152.

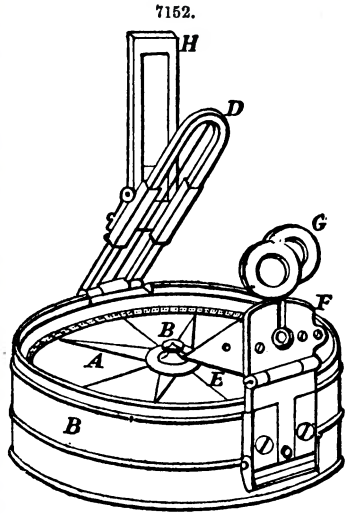

The method of using the instrument is as follows;—The sight-vane D and the prism E, being turned up upon their hinge-joints, as represented in Fig. 7152, the instrument is held as nearly

horizontal as possible, or, if it be used with a tripod stand, set as nearly horizontal as can be done by moving the legs of the stand, so that the card may play freely. The prism is then raised in its socket until the divisions upon the card are seen distinctly through the prism, and the instrument turned round until the object to be observed is seen through the portion of the slit projecting beyond the prism in exact coincidence with the thread of the sight-vane. The card is then brought to rest by touching the spring; and the reading at the division upon the card, which appears in coincidence with the prolongation of the thread, gives the magnetic azimuth of the object observed, or the angle which a straight line, drawn from the eye to the object, makes with the magnetic meridian. The magnetic azimuth of a second object being obtained in the same manner, the difference between these two azimuths is the angle subtended by the objects at the place of the eye, and is, moreover, independent of any error in the azimuths, arising from the slit in the prism not being diametrically opposite to the thread of the sight-vane.

By taking the variation of the compass, as it is termed, that is, the difference between the magnetic and the true north, from the Nautical Almanack for the year, the true meridian line can always be obtained. Although the prismatic compass is a convenient instrument for filling in details, it must never be employed where accuracy is required. Owing to numerous causes which affect observations made by the aid of a magnetic needle, the angles cannot be relied upon to nearer than half a degree. In Fig. 7152 there are two dark glasses at G, which may be made to turn over the sloping side of the prism, and are useful when observing under a strong glare of the sun. A mirror is shown at H, which can be attached to the sight-vane D, or removed at pleasure. Its use is to reflect an object when it is much below or above the level of the observer. A stop is provided to throw the needle off its centre when it is not in use.

The Circumferenter is a compass mounted upon a stand, with sights, and is now only used for mining surveys.

The Theodolite.—The modern form of this important instrument is represented in Fig. 7153. It may be considered as consisting of three parts; the parallel plates with adjusting screws fitting on to the staff-head; the horizontal limb, for measuring the horizontal angles; and the vertical limb, for measuring the vertical angles, or angles of elevation.

7153.

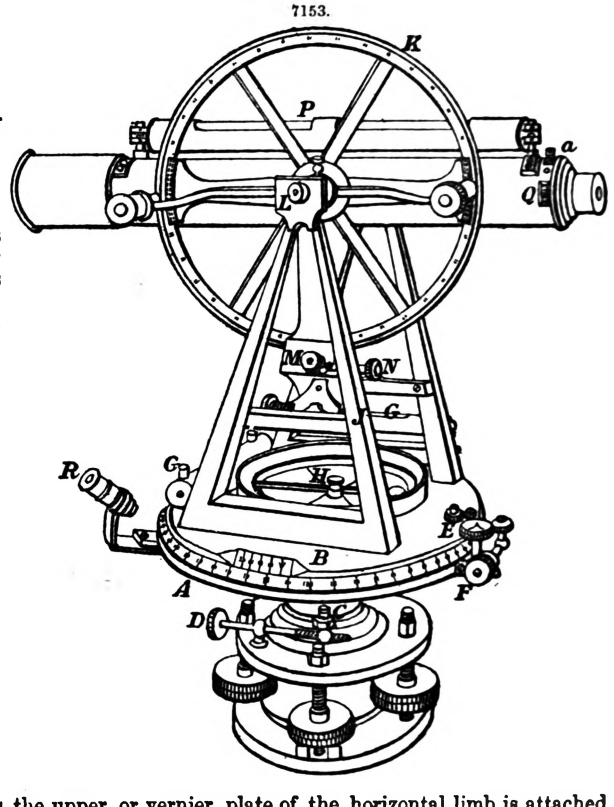

The horizontal limb is composed of two circular plates, A and B, which fit accurately one upon the other. The lower plate projects beyond the other, and its projecting edge is sloped off, or chamfered, as it is called, and graduated at every half degree. The upper plate is called the vernier-plate, and has portions of its edge chamfered off, so as to form with the chamfered edge of the lower plate continued portions of the same conical surface. These chamfered portions of the upper plate are graduated to form the verniers, by which the limb is subdivided to single minutes. The 5-in. transit theodolite, Fig. 7153, has two such verniers 180° apart. The lower plate of the vertical limb is attached to a conical axis passing through the upper parallel plate, and terminating in a ball fitting in a socket upon the lower parallel plate. This axis is, however, hollowed to receive a similar conical axis ground accurately to fit it, so that the axis of the two cones may be exactly coincident or parallel to one another. To the internal axis the upper, or vernier, plate of the horizontal limb is attached, and thus, while the whole limb can be moved through any horizontal angle desired, the upper plate only can also be moved through any desired angle, when the lower plate is fixed by means of a clamping screw, which tightens the collar C. D is a slow-motion or tangent screw, which moves the whole limb through a small space, to adjust it more perfectly, after tightening the collar C by the clamping screw E. There is also a clamping screw for fixing the upper, or vernier, plate to the lower plate, and a tangent-screw F, for giving the vernier-plate a slow motion upon the lower plate, when so clamped. Two spirit levels G are placed upon the horizontal limb, at right angles to each other, and a compass H is also placed upon it in the centre, between the supports J, J, for the vertical limb.

The vertical limb K is divided upon one side into four quadrants, each way from 0° to 90°, and subdivided by the verniers, which are fixed to the axis of the telescope, to single minutes. Upon the other side are marked the number of links to be deducted from each chain, for various angles of inclination, in order to reduce the distances, as measured along ground rising or falling at these

angles, to the corresponding horizontal distances. The axis L of this limb must rest, in a position truly parallel to the horizontal limb, upon the supports J, J, so as to be horizontal when the horizontal limb is set truly level, and the plane of the limb K should be accurately perpendicular to its axis. On top of the telescope is fixed the bubble P. The horizontal axis L can be fixed by a clamping screw M, and the vertical limb can then be moved through a small space by a slow-motion screw N.

Adjustments.—Before commencing observations with this instrument, the following adjustments must be attended to:—

Adjustments of the telescope, which comprise the adjustment for parallax and for collimation. Adjustment of the horizontal limb and of the vertical limb.

When the image of the object viewed, formed by the object-glass, either falls short of, or beyond the place of the cross wires, the error arising from this cause is called *parallax*. The existence of parallax is determined by moving the eye about when looking through the telescope, observing whether the cross wires change their position, and are flittering and undefined.

To correct this error, first adjust the eye-piece, by means of the movable eye-piece tube, till the cross wire is clearly defined, and sharply marked against any white object.

Then by moving the milled-headed screw at the side of the telescope, the internal tube is thrust outwards or drawn inwards, until the proper focus is obtained according to the distance of the object, and the object can be clearly seen, and the intersection of the wires, clearly and sharply defined, before it. The existence of parallax is very inconvenient, and, where disregarded, has frequently been productive of serious error. It will not always be found sufficient to set the eye-glass first and the object-glass afterwards. The setting of the object-glass, by introducing more distant rays of light, will affect the focus of the eye-glass, and produce parallax or indistinctness of the wires, when there was none before; the eye-piece must, in this case, be adjusted again.

Generally, when once set for the day, there is no occasion for altering the eye-glass, but the object-glass will of course have to be altered at every change of distance of the object.

In adjusting the instrument, the parallax should be first corrected, and then the error of collimation.

Adjustment for Collimation.—To collimate a transit theodolite, set the cross wires on some very distinct distant object by means of the tangent-screw F. Now unclamp the vertical circle, and lift the horizontal axis, carrying the telescope with it out of its bearings in the supports J, J. Replace it in its bearings with the ends reversed, so that the telescope is upside down. If the cross wires now coincide exactly with the same point as when the telescope was in its original position, the line of collimation is perpendicular to the horizontal axis, and the instrument is in adjustment in that particular respect. But if this coincidence does not obtain, one half of the deviation must be corrected by moving the cross wires by means of the horizontal adjusting screws attached to the diaphragm, and the other half by means of the tangent-screw F. Reverse the telescope again, and repeat the operation until the adjustment is accomplished. The telescope may be reversed for the purpose of effecting this adjustment in another manner. It may be turned over on its horizontal axis, and the horizontal limb revolved through an angle of 180°. To adjust the line of collimation in a vertical direction the same operation is to be carried out, but the vertical screws *a*, in Fig. 7153, must be used instead of the horizontal.

Adjustment of the Horizontal and Vertical Limbs.—Set the instrument up as accurately as possible by the eye, by moving the legs of the stand. Tighten the collar C by the clamping screw, and, unclamping the vernier-plate, turn it round till the telescope is over two of the parallel plate screws. Bring the vertical circle carefully to zero by turning the tangent-screw N. Turn the vernier-plate half round, bringing the telescope again over the same pair of the parallel plate screws, and if the bubble of the level be not in the centre of its run, bring it to the centre, half-way by turning the parallel plate screws over which it is placed, and half-way by turning the tangent-screw N. Repeat this operation till the bubble remains accurately in the centre of its run in both positions of the telescope; and then turning the vernier-plate round till the telescope is over the other pair of parallel plate screws, bring the bubble again to the centre of its run by turning these screws. The bubble will now retain its position while the vernier-plate is turned completely round, showing that the internal azimuthal axis about which it turns is truly vertical. The bubbles of the levels on the vernier-plate being now, therefore, brought to the centres of their tubes, will be adjusted to show that the internal azimuthal axis is vertical. Now, having clamped the vernier-plate, loosen the collar C by loosening the clamping screw, and move the whole instrument slowly round upon the external azimuthal axis, and if the bubble of the level above the telescope maintains its position during a complete revolution, the external azimuthal axis is truly parallel with the internal, and both are vertical at the same time; but if the bubble does not maintain its position, it shows that the two parts of the axis have been inaccurately ground, and the fault can only be remedied by the instrument maker. When the horizontal limb is in adjustment, that is, when the bubbles of two levels on the vernier-plate remain in the centre of their run, during all positions of the revolution of either the vernier-plate or the whole instrument around the vertical axis, the bubble above the telescope should be in the centre of its run when the vertical arc or circle is set to zero. Should this not be the case, there is an index error which must be allowed for in all observations made with the vertical limb.

The bubble tubes are frequently mounted with capstan-headed screws at both ends, but in both theodolites and levels of the most modern make, they are mounted with a hinge at one end and a single screw at the other, as shown in Fig. 7156. This is by far the best method of mounting them, as they retain their adjustments more permanently. There is this difference to be remarked respecting their nature, and it is necessary to be certain that in the latter plan it can never happen that the hinged end should ever require lowering. Fig. 7154 will render our meaning clear. Since the bubble always runs to the highest end, there is no necessity of raising or lowering more than one end of the tube, provided the other is free to pivot upon a hinge, but not to have any vertical motion. In Fig. 7154 let A B represent the correct position of the bubble tube when the instrument is properly set up and levelled.

Let A be the screw end, and B the hinged extremity, which it must be borne in mind cannot by construction be raised or lowered. Suppose the level tube to be deranged, and the screw end to occupy the position shown by the dotted line G B, it is evident that it may be restored to a horizontal position either by lowering the end G to the point A or raising B to the point D, the line G D being parallel to A B, and therefore horizontal. But as the end B cannot be raised, the only alternative is to lower G. But suppose the instrument is badly constructed, so that, after lowering the movable end as much as possible, that is, screwing it down as far as the screw will go, it still remains too high. Then there is no remedy but that of sending the instrument to the maker to have the bubble tube taken off and remounted. Referring to the diagram for an illustration, suppose the end A to be deranged so as to occupy the position shown at E, and that after screwing it down as far as possible it can only be brought to G, the bubble tube will then occupy the position shown by the dotted line G B, and will be always out of level until remounted. A similar contingency is represented by the dotted lines F B, H B on the lower side of the line A B, on the supposition that the movable end at A has been lowered by derangement instead of raised. In the extreme case we have selected, it is supposed that the end A which was at H could not be raised higher than F, and as B could not be lowered to K, the position of the bubble tube would be represented by the dotted line F B. In purchasing a theodolite or a level with the bubble tubes mounted on a hinge, if when the instrument is set up and levelled the movable or screw end of the tube is raised much above its bearings, it should be rejected, as the tubes will never be steady under the least rough usage. When all the parts of a theodolite or level are fresh from the hands of the maker, all the adjusting screws should be nearly home, and the instrument will then be in what is termed permanent adjustment.

7154.

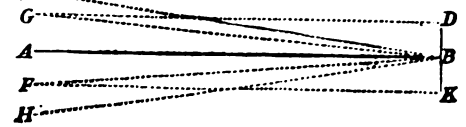

The next point to be considered with respect to a theodolite is the position of the verniers. These are two in number, placed opposite one another, that is, at a distance of 180° apart on the divided limb. The verniers are sometimes fixed at the proper distance apart in the making of the instrument, and at other times are movable, so as to be capable of accurate adjustment when required. The object of having two verniers is to ensure great accuracy in the observations. When this is needed, the angles are read off by both verniers and the mean taken, which tends to reduce any small error that might otherwise occur. In the diagram in Fig. 7155, let A B represent the normal position of the verniers of a theodolite, that is, when they are both at zero, A being one vernier, and B the other. Suppose a reading is taken with the vernier B only, the angle read being equal to B D. But suppose also in the reading of the angle an error is made in excess equal to D F, which would be equivalent to reading the angle B F instead of B D. One reading only being taken with one vernier, the error remains. But if when the angle B F is read by error, the angle A C be read with the other vernier, and the mean of the two readings A C and B F be taken, the error becomes reduced to D K or half D F. Instead of supposing the readings to be wrongly taken, if we imagine trifling errors to exist in the verniers themselves, the same line of reasoning holds good. Trifling errors do exist in the verniers, and it is for the purpose of nullifying them that they are both used. In ordinary practice it is not necessary to use both verniers, and the surveyor should always use the same vernier during the same series of operations, making a slight scratch on one of the verniers so as to be able to distinguish it from the other. When the verniers of a theodolite are fixed by construction, if they do not each coincide with the zero of the divided lower plate to within three or four minutes, the instrument is faulty. Having completed our remarks on the levels and verniers, there is still one more important consideration to attend to. It is the vertical position of the supports J, J, in Fig. 7153. In some instruments, always in those of a large size, there is a separate adjustment for this purpose, but in many there is none, the supports being set vertical by the maker. To ascertain this, set up the instrument accurately level, direct the intersection of the cross wires to some well-defined vertical line, such as the quoin of a building, and move the telescope up and down. If the intersection of the wires coincide during the whole motion of the telescope with the edge of the quoin the construction is good, if not, bad, and the fault can only be remedied by the maker. As a piece of practical advice; always turn the instrument in the same direction either backwards or forwards, but not indifferently backwards and forwards. The reason for this is, that there is always some lubricating substance present between the axial bearings, and if the instrument is constantly turned in the same direction, this is always maintained in a smooth and even state. But when the rotation is backwards and forwards it gets rubbed up, and interferes with the evenness of the movements.

7155.

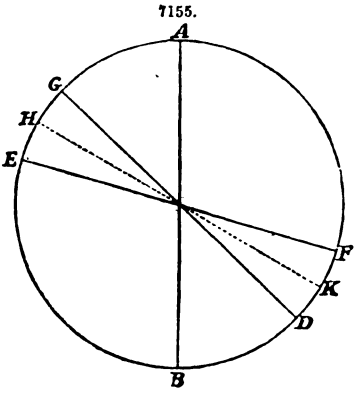

Everest's Theodolite.—In Everest's theodolite, a number of which were made for use in India, instead of the upper parallel plate there are three diverging arms, with a vertical foot screw supporting the end of each. In setting up a theodolite over any station, a plumb-bob is hung from a small hook which is placed in the upper part of the legs, and is situated exactly under the vertical axis of the instrument. On referring to Fig. 7153 it will be seen that the microscope R for reading the divisions on the horizontal limb is mounted on a little bracket, which slides in a groove in the lower part of the rim of the limb. This is a complete mistake in the construction of the instrument, and it is astonishing that the makers have not altered the arrangement. As the microscope is only

needed to read the vernier, and that portion of the horizontal limb corresponding to it, the proper place for it is on the vernier-plate. As the vernier-plate revolved it would carry the microscope with it, and it would always be where it was wanted. In the position in Fig. 7153 it is not only in the way, but when shifted along its groove it is very liable to disturb the level of the instrument. It may be useful for those who are in possession of cradle theodolites to know that they can be converted into transit theodolites.

Levelling Instruments.—The three best-known levels are the Y, Troughton's, and Gravatt's, or the Dumpy level. Of these the last is so universally used by engineers that a description and illustration of it will be sufficient for our purpose. The most modern form of this instrument by Elliott Brothers is represented in Fig. 7156. The diaphragm is carried by an internal tube, which is nearly equal in length to the external tube A. The external tube is sprung at its aperture, and gives a steady and even motion to the internal tube, which is thrust out, and drawn in, to adjust the focus for objects at different distances by means of the milled headed screw B. The spirit level is placed above the telescope, and attached to it by a hinge C at one end, and a capstan-headed screw D at the other, by means of which the bubble can be brought to the centre of its run, when the line of collimation is adjusted.

7156.

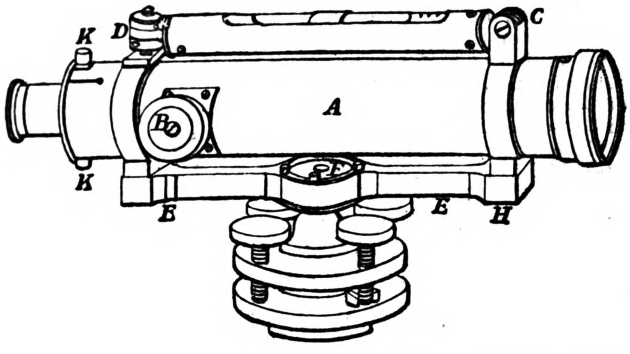

The telescope is attached to a horizontal bar E E, but room is just left between the telescope and the bar for a compass-box if required. A circular level F is placed upon the horizontal bar E E, parallel to the principal level G, by which the instrument can be set up at once with the axis nearly vertical.

The telescope is attached to the horizontal bar by countersunk screws at H H, by which the line of collimation is set perpendicular to the vertical axis, and the instrument is set up upon parallel plates, as in the case of the theodolite.

In setting up the instrument in the field, when it is in perfect adjustment, the telescope is placed over each pair of the parallel plate screws alternately, and they are moved till the bubble settles in the middle of the tube, and the operation is repeated till the telescope can be turned quite round upon the staff-head, without any change taking place in the position of the bubble.

Adjustments of the Level.—The adjustment for parallax is made in the same manner as for the theodolite. The collimating of a dumpy level is not so simple an operation as in the case of the Y level or the theodolite, since the telescope cannot be either rotated or reversed, that is, turned upside down in its collars or bearings. A simple method of placing the collimation in adjustment is as follows. In Fig. 7157 let the level be accurately set up at A, and readings taken at B and C two points equidistant from A. Let the level be shifted and set up at D, and readings again taken at B and C. Let these readings be respectively B^1, C^1, B_2, C_2. When the collimation is in adjustment we have $(B^1 - C^1) = B_2 - (C_2 + d)$,

7157.

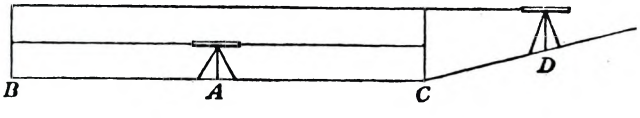

in which equation d is the difference of the curvature of the earth for the distances D B and D C. If $(B^1 - C^1) > B_2 - (C_2 + d)$, the line of collimation points downwards; but if $(B^1 - C^1) < B_2 - (C_2 + d)$, it points upwards. When $(B^1 - C^1) = (B_2 - C_2)$, the line of collimation will point downwards by an amount equal to the difference of the curvature of the earth for the distances D B and D C. Put $(B^1 - C^1) - (B_2 - C_2 - d) = \pm E$; then we have B C : $\pm$ E :: D B : $\pm$ E^1. The reading on the staff at B from station D should be equal to $B^1 \pm E^1$, and the horizontal wire can be adjusted to read this by means of the diaphragm screws K K in Fig. 7156. The following is Gravatt's method for collimating a dumpy. "On a tolerably level bit of ground drive three stakes at distances of about four or five chains apart. Call the first stake A, the second B, and the third C. Set up the level half-way between the stakes A and B, and take readings on the staff A′ and B′, then, although the instrument be out of adjustment, the two readings will be equidistant from the earth's centre.

"Now remove the instrument to a point half-way between B and C. Again read off the staff on B, and read also a staff placed on the stake, which call C. Now, by adding the difference of the readings on B, with its proper sign, to the reading on C, we get three points, say A′, B′, and C′, equidistant from the earth's centre, or in the same true level.

"Place the instrument at any short distance, say half a chain beyond it, and, using the bubble merely to see that you do not disturb the instrument, read all three staffs, or, to speak more correctly, get a reading from each of the stakes A, B, C; call these three readings A″, B″, C″. Now, if the stake B be half-way between A and C, then ought C″ − C′ − (A″ − A′) to be equal to 2 [B″ − B′ − (A″ − A′)]; but if not, alter the screws which adjust the diaphragm, and consequently the horizontal spider line, or wire, until such be the case, and then the instrument will be adjusted for collimation.

"To adjust the spirit bubble without removing the instrument, read the staff on A, say it reads A‴, then adding (A‴ − A′) with its proper sign to B′ we get a value, say B‴.

"Adjust the instrument by means of the parallel plate screws to read B‴ on the staff B.

"Now, by the screws attached to the bubble tube, bring the bubble into the centre of its run.

"The instrument will now be in complete practical adjustment for level, curvature, and horizontal refraction, for any distance not exceeding ten chains, the maximum error being only $\frac{1}{1000}$th of a foot."

Whatever be the distances between the stakes A, B, C, the following proportions ought to hold, namely;—

The distance from A : B : the distance A to C :: B″ − B′ − (A″ − A′) : C″ − C′ − (A″ − A′).

If this adjustment be made by one of the countersunk screws at H H, instead of the parallel plate screws, the line of collimation will be brought into its proper position with respect to the vertical axis.

To set the Axis of the Telescope perpendicular to the Vertical Axis round which the Instrument turns, or, in other words, to make it traverse.—Place the telescope over two of the parallel plate screws, and move them, unscrewing one while screwing up the other, until the bubble of the level settles in the centre of its run. Then turn the instrument half round upon the vertical axis, so that the contrary ends of the telescope may be over the same two screws, and, if the bubble does not again settle at the same point as before, half the error must be corrected by turning one of the countersunk screws at H H, and the other half by turning the two parallel plate screws over which the telescope is placed. Next turn the telescope a quarter round, that it may lie over the other two screws, and repeat the operation again and again until the bubble remains in the centre of the tube during a complete revolution of the telescope. When the adjustments of a dumpy level are well and thoroughly made, the instrument will remain in excellent working order for many years. The remarks respecting the manner in which those adjustments should be made with regard to the theodolite are equally applicable to those of the level.

The Vernier, Fig. 7158, is so constructed as to slide evenly along the graduated limb of an instrument, and enables us to measure distances, or read off observations, with greater minuteness than we could without its aid. In another kind of vernier scale, the divisions on the lower or subsidiary scale are longer than those on the upper or primary scale; but in the vernier now to be described, the divisions are usually shorter than those upon the limb to which it is attached, the length of the graduated scale of the vernier being exactly equal to the length of a certain number (N−1) of the divisions upon the limb, and the number (N) of divisions upon the vernier being one more than the number upon the same length of the limb.

7158.

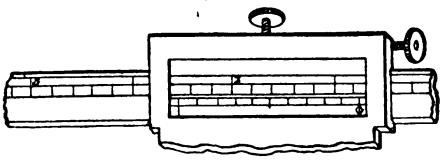

7159.

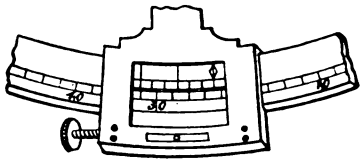

Let, then, L represent the length of a division upon the limb, and L_1 the length of a division upon the vernier; so that $(N-1)\,L = N\,L_1$; and therefore $L - L_1 = L - \frac{N-1}{N}L = \frac{1}{N}L$; or the defect of a division upon the vernier from a division upon the limb is equal to the Nth part of a division upon the limb, N being the number of divisions upon the vernier. If N divisions of the vernier were equal to (N + 1) divisions of the limb, or $(N+1)\,L = N\,L_1$, then would

$$L_1 - L = \frac{N+1}{N}L - L = \frac{1}{N}L;$$

or the excess of a division upon the vernier above a division upon the limb would be equal to the Nth part of a division upon the limb. With this arrangement, however, we should have the inconvenience of reading the vernier backwards.

In Fig. 7159, six divisions of the vernier are equal to five divisions of the limb; and consequently the above defect, or L − V, is equal to a sixth part of a division upon the limb, or to 20′, since a division of the limb is equal to 2°.

In Fig. 7158, ten divisions of the vernier are equal to nine divisions of the limb; and consequently L − V is equal to a tenth part of a division upon the limb, or to the hundredth part of an inch, a division of the limb being equal to the tenth part of an inch.

We must, in reading, first look to the arrow, as pointing out the exact place upon the limb at which the required measurement is indicated. If, then, the stroke upon the vernier at the arrow exactly coincides with a stroke upon the limb, the reading at this stroke gives the measurement required; but, if the stroke at the arrow be a distance beyond a stroke upon the limb, then will this distance be equal to once, or twice, or thrice, the difference of a division upon the limb and upon the vernier, according as the stroke at the end of the first, or second, or third, division upon the vernier coincides with a stroke upon the limb.

The stroke upon the vernier, Fig. 7159, at the arrow falls beyond the stroke indicating 22° upon the limb, and the stroke at the end of the second division upon the vernier coincides with a stroke upon the limb; the reading therefore is 22° 40′.

The stroke upon the vernier, Fig. 7158, at the arrow falls beyond the stroke indicating one inch and three tenths upon the limb, and the stroke at the end of the sixth division upon the vernier

coincides with a stroke upon the limb; the reading therefore is 1·36 in., or one inch three tenths and six hundredths.

The limbs of the best sextants are now divided at every 10 minutes, and 59 of these parts are made equal to 60 divisions of their verniers. In this case $L - V = \frac{L}{60} = \frac{10'}{60'} = 10''$; so that these instruments can be read off by the aid of their verniers to an accuracy of 10 seconds. The verniers occupy on the limbs spaces equal to 9° 50′. That is, according to the graduation of the instrument; but as the angles observed by a sextant are double the angles moved over by the index, the limb of the instrument is graduated, as though it were double the size; so that the verniers really occupy an arc of 4° 55′ only.

The limbs of small theodolites are generally divided at every 30 minutes, and 29 of these parts are made equal to 30 divisions of their verniers, which therefore enables us to read off to an accuracy of $\frac{30'}{30}$, or 1′. In the mountain barometer, the scale being divided into $\frac{5}{100}$ths of an inch, 9 of these parts are made equal to 10 divisions of the vernier, which therefore enables us to read off to an accuracy of $\frac{9}{1000}$ths of an inch.

We have, in the above explanations, only considered the case of an exact coincidence between some one of the strokes upon the vernier and a stroke upon the limb. Suppose now that in Fig. 7159 the stroke at the end of the second division, instead of coinciding with a stroke upon the limb, fell a little beyond it, while the stroke at the end of the third division fell a little short of a stroke upon the limb; then the measurement indicated would be something between 22° 40′ and 23°, which the observer, should there be no other mechanism attached to the vernier, must estimate by guess, according to the best of his judgment.

Diaphragms.—In looking through a telescope, a considerable field of view is embraced; but the measurements indicated by any instrument, of which the telescope may form a part, will only have reference to one particular point in this field of view, which particular point is considered as the centre of this field of view. We must therefore place some fixed point in the field of view, and in the focus of the eye-piece, and the point to which the measurement will have reference will be that point of the object viewed, which appears to be coincident with this fixed point, or which, according to the technical phrase, is bisected by the fixed point.

The intersection of two fixed lines will furnish us with such a fixed point, and consequently two lines of spider's thread, Fig. 7160, are fixed at right angles to each other in the focus of the eye-piece. They are attached by a little gum to a brass ring of smaller dimensions than the tube of the telescope, and which is fixed to the tube by four small screws, *a*, *b*, *c*, *d*, and constitutes the diaphragm in its simplest form. If the screw *d* be eased, while at the same time *c* is tightened, the ring will be moved to the left; but if *c* be eased and *d* tightened, the ring will be moved to the right; and in a like manner it may be moved up or down by means of the screws *a* and *b*.

7160.

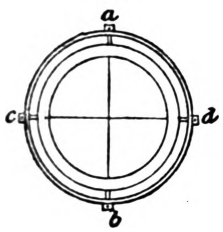

7161.

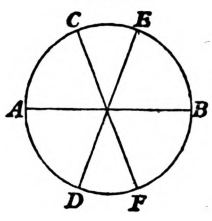

7162.

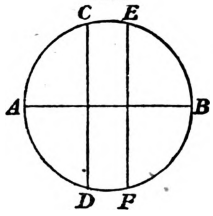

The diaphragm mostly placed in these telescopes of theodolites is shown in Fig. 7161, and that in those of levels in Fig. 7162. The two vertical lines in the latter, C D and E F, serve to show at a glance when the staff is held vertical in one plane.

Plotting Surveys.—The principal instrument used in laying down the points of a large survey, is the protractor. When considerable accuracy is required, a semicircular, or, better still, a circular protractor should be used, similar to that represented in Fig. 7163. The circumference is a complete circle, and attached to the centre by four arms, or radii, A, A, A, A. At the centre there is an open space, which is surrounded by a ring or collar B, which carries two radial bars C, C. To the extremity of one bar is a pinion D, working in a toothed rack quite round the outer circumference of the protractor. To the opposite extremity of the other bar C, is fixed a vernier, which subdivides the primary divisions on the protractor to single minutes, and by estimation to thirty seconds. This vernier, as may readily be understood from the engraving, is

7163.

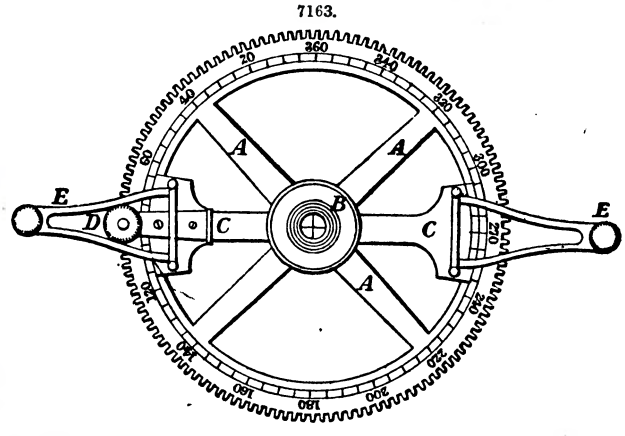

carried round the protractor by turning the pinion D. Upon each radial bar C, is placed a branch E, carrying at its extremity a fine steel pricker, whose point is kept above the surface of the paper by a spring placed under its support, which gives way when the branch is pressed downwards, and allows the point to make the necessary puncture in the paper. The branches E, E, are attached to the bars C, C, with a joint which admits of their being folded backwards over the instrument when not in use, and for packing in its case. The centre of the instrument is represented by the intersection of two lines drawn at right angles to each other on a piece of plate glass, which enables the person using it to place it so that the centre, or intersection of the cross lines, may coincide with any given point on the plan. If the instrument is in correct order, a line connecting the fine pricking points with each other would pass through the centre of the instrument, as denoted by the before-mentioned intersection of the cross lines upon the glass, which, it may be observed, are drawn so nearly level with the under surface of the instrument as to do away with any serious amount of parallax, when setting the instrument over a point from which any angular lines are intended to be drawn. In using this instrument, the vernier should first be set to zero, which is at the division marked 360, on the divided limb, and then placed on the paper, so that the two fine steel points may be on the given line, from whence other and angular lines are to be drawn, and the centre of the instrument coincide with the given angular point on such line. This done, press the protractor gently down, which will fix it in position by means of very fine points on the under side. It is now ready to lay off the given angle, or any number of angles that may be required, which is done by turning the pinion D till the opposite vernier reads the required angle. Then press downwards the branches E, E, which will cause the points to make punctures in the paper at opposite sides of the circle; which being afterwards connected, the line will pass through the given angular point, if the instrument was first correctly set. In this manner, at one setting of the instrument, a great number of angles, or a complete circular protractor, may be laid off from the same point.

The most accurate method of laying down on paper any triangle, is to calculate the length of the sides, and lay them down by beam compasses, if they are too long for ordinary compasses. With respect to the use of the minor instruments employed in plotting and office drawing generally, the best course for the beginner to adopt is to purchase a good case, and with a little practice he will soon begin to find out their value and several uses.

See DISTANCES.

SWITCH. FR., *Aiguille, switch;* GER., *Weichschiene;* ITAL., *Sviatoio;* SPAN., *Cambio de via.*

See PERMANENT WAY.

TAP. FR., *Taraud;* GER., *Schraubenbohrer;* ITAL., *Maschio;* SPAN., *Macho de tarraja.*

In an engineering sense, a tap is a conical screw made of hardened steel, and grooved longitudinally, for cutting threads in nuts, and the like. A *tap-bolt* is a bolt with a thread on one end and a head on the other end, to be screwed into some fixed part, instead of passing through the part and receiving a nut. See HAND-TOOLS.

TAPPET. FR., *Toc;* GER., *Mitnehmer;* ITAL., *Arresto;* SPAN., *Palanca de escape.*

A *tappet* is a small lever or projection intended to tap or touch lightly something else with a view to change or regulate motion. For instance, a *tappet-motion* is a valve-motion worked by tappets, from a reciprocating part of a steam-engine, without either eccentric or cam.

TELEGRAPHY. FR., *Télégraphie;* GER., *Telegraphie;* ITAL., *Telegrafia;* SPAN., *Telegrafia.*

In the present article we purpose to treat the subject of telegraphy solely from an engineering point of view. The rapid and extraordinary development of the telegraphic system has rendered this part of the subject, namely, the construction and maintenance of the vast network of lines of communication, one of the highest importance, and the wide and varied experience which has been gained in all parts of the known world has furnished results from which reliable and definite information may be obtained for future guidance. To bring together these results and to impart this practical information is our present object. We shall therefore introduce only so much of the science of electricity as is necessary to the proper execution of the above-mentioned work. A minute scientific investigation of the numerous interesting facts relating to electric currents would be out of place here, and must consequently be left to the more appropriate pages of special treatises.

Batteries.—The nature, construction, and relative efficiency of the several batteries now in use having been fully described in former articles, see Battery, Boring and Blasting, and Electro-metallurgy, there remains but little to be said on this subject. The most constant and economical battery is that modification of Daniell's in which sulphate of zinc is used in the zinc cell instead of sulphuric acid. The greatest effect will, doubtless, be obtained when the porous cell is very thin; but it is desirable, in order to prevent the mixing of the two fluids as much as possible, to increase its thickness, and even to grease its back and sides; for when the cell is thin, the waste of sulphate of copper is as great when the battery is idle as when it is in use. This sulphate of copper should not be crushed, for when such is the case, the powder of the crushed crystals is apt to cement the whole into an almost insoluble mass at the bottom of the cell. When specially ordered, it may be obtained in crystals about the size of a hazel-nut.

The zinc, which is cast, should not contain more than 2 or 3 per cent. of impurities. When the zinc solution becomes strong, it crystallizes on the sides of the cell; the liquid then rises by capillary attraction between the crystals and the cell, and is apt to creep over the top and down the outer side of the cell, thus forming in time a kind of siphon which will often half empty the cell. The readiness with which gutta-percha is affected in this way has led to its almost complete abandonment. The evil may be lessened by dipping the cell, after having thoroughly dried and warmed it, about half an inch in a warm mixture of paraffin and paraffin oil. In some instances the copper plate has been placed at the bottom and the zinc at the top of the cell, the solutions being separated only by their difference in specific gravity. This arrangement, though energetic for a time, and having very little resistance, is inconstant and wasteful, as the copper solution rises rapidly to the zinc and is thrown down by it. In all cases the zinc should hang vertically, and should not

cross or face the copper, for when placed horizontally hydrogen accumulates under it and isolates it from the liquid.

Thirty cells of a battery of this kind are sufficient for a line of 200 miles if the insulation is good. On long lines subject to loss in wet weather, or when the insulation is bad, it is necessary to use larger cells. A better effect will be obtained by increasing the size of the cells than by adding extra cells in series.

As supplementary to the description previously given of the several kinds of battery, we add the following, to illustrate those varieties which are employed for telegraphic purposes.

Daniell's element consists of a pole of sheet copper in a saturated solution of sulphate of copper, and a pole of amalgamated zinc in dilute sulphuric acid. These two solutions are separated by a porous diaphragm. The outer casing of this element is usually of stoneware, and is of the form shown in Figs. 7164, 7165. Glass is sometimes employed instead of stoneware, but is not generally so suitable.

7164.

7165.

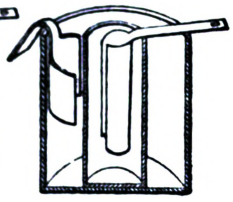

7165A.

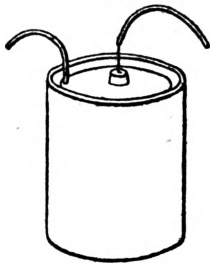

7166.

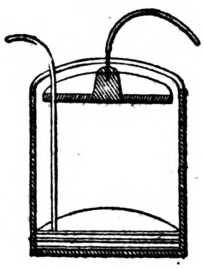

Minotti's, Figs. 7165A, 7166, element is a simple and inexpensive form of Daniell's element. It consists of a brown earthenware jar, at the bottom of which is placed a disc of sheet copper connected to an insulated wire. The jar is half filled with sulphate of copper crystals, over which a disc of felt is placed, and above this a thick layer of saw-dust to act as a diaphragm. The zinc plate is circular and lies upon the saw-dust. When in use, the cell is filled up with acidulated water. Sometimes a thin layer of oil is placed above this to prevent evaporation.

Marié-Davy's element consists of a carbon pole in a paste of protosulphate of mercury and water contained in a porous pot, and a zinc pole in dilute sulphuric acid. Fig. 7167 represents a portable form of this battery, well adapted for travelling and testing purposes. The poles are suspended in a glass jar sealed at the top. This is a powerful and constant battery.

7167.

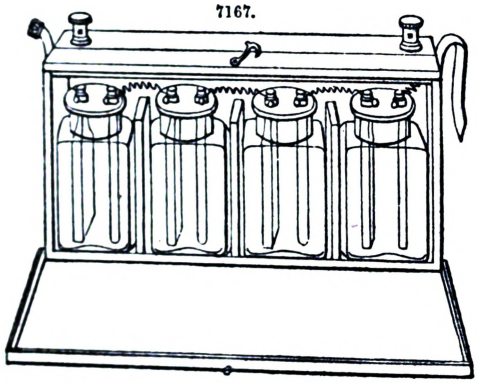

7168.

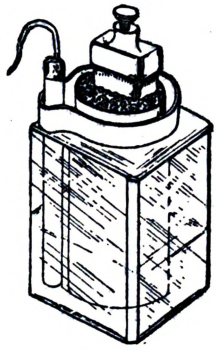

7169.

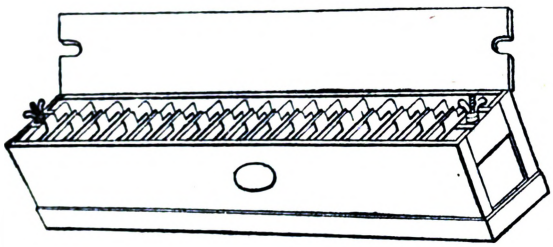

7170.

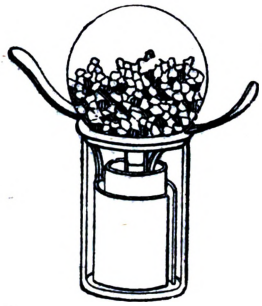

Leclanché's element has a cylinder of amalgamated zinc suspended in a solution of ordinary sal-ammoniac, the negative pole being a prism of carbon surrounded in a porous cell by a pulverized mixture, tightly packed, of peroxide of manganese and carbon. The whole is contained in a glass jar, as in Fig. 7168. This element is powerful, clean in its action, and does not deteriorate when not in use. It is much employed on the French railways, but it has not met with much favour in England.

Fig. 7169 is a common modification of Daniell's battery. It consists of a teak trough divided into cells by plates of slate, the whole being covered with marine glue. The cells are subdivided by porous divisions, and the zinc and copper plates are suspended alternately in the divisions thus formed. Usually this form of battery consists of twelve cells.

Another modification of Daniell's, and known as the Globe Reservoir Battery, is represented by Fig. 7170. This form is more constant and regular in its action than the preceding; it will last for a period of from twelve to fifteen months without attention.

Wire.—The most durable portion of a line of telegraph is the wire. In no instance has it been necessary to re-wire even the oldest line when not exposed to any specially destructive agency. The kind universally adopted for land lines is galvanized iron wire, and experience has shown that it is admirably suited to the purpose. But durable as this wire is when erected in the open country, in towns, and especially manufacturing towns, it is quickly destroyed. The same destruction also takes place in tunnels and in the neighbourhood of chemical works. Attempts have been more or less successfully made to protect the wire from these influences by means of paint, and, in some instances, gas-tar. If the operation is performed at the manufactory, the paint, or other coating, will be rubbed off in transit from place to place and in course of erection, and as corrosion will immediately be set up at such spots, the benefit of the coating in other parts is nullified. On the other hand, the difficulty and expense of painting after the wires are fixed to the poles are great. The process can, however, be easily performed on the ground before raising them to their positions on the poles. But in this case, unless great care be exercised to prevent the removal of the paint from the points of support, as well as to ensure the wires being perfectly dry, the results will not be satisfactory. The only plan that may be regarded as really successful, is to run the wire through paint or some bituminous preparation, and to immediately spin round it hemp or cotton well saturated with the same compound. This protects the coating from abrasion, and also forms of itself an efficient protective covering.

On the continent of Europe it was a common practice to use ungalvanized wire of a larger gauge, the extra quantity of metal being supposed capable of giving the wire as long a life as the smaller galvanized wire. This practice has never been adopted in England, and it is being discontinued elsewhere. The process of galvanizing slightly hardens the metal, and considerably lessens its capability of stretching; but its ultimate tensile strength does not seem to be affected by the operation. To test the thickness of the zinc coating, dissolve 1 lb. of sulphate of copper in 5 lbs. of water, and, plunging the wire into the solution, let it remain immersed one minute; then wipe it clean, and repeat the process four times. If, after the fourth immersion, the wire still appears black, the zinc has not been all removed, and it may be thence inferred that the galvanizing was well performed. But if the wire has a copper hue, the iron has been exposed, thus showing that the coating was too thin.

The quality of the wire used for telegraphic purposes is a matter of the highest importance, and one that usually receives very careful attention. For it must be borne in mind when specifying wire, that frequent derangement of the line in consequence of breakages will speedily absorb a small saving effected in the first cost, besides which, the annoyance caused by such derangements is very great. It may be observed, however, that great tensile strength is not of primary importance for ordinary work. What is required is rather a wire that will bear the bending necessary to make joints, and to fix it to the insulators, than one that will bear a great tensile strain. Telegraph wire may be tested for this quality by placing it in a vice and ascertaining the number of times it may be bent to a right angle without breaking. Care must be taken that the edges of the vice do not cut the wire, or the results of the experiment will be vitiated. Soft wire, though of inferior tensile strength, will bear this test better than hard wire.

Wire is prepared by being drawn down to the required size from rods of rolled iron. These rods should be perfectly free from cinders or dirt, as the presence of such impurities would occasion imperfections in the wire. All imperfections of this nature, as well as splits in drawing and imperfect welds, should be carefully sought for and broken out before the wire is erected. For this purpose, it was usual formerly to lay the wire out in the line and to stretch it, and as this stretching removed all tendency to spring and curl from being coiled in bundles, the process was termed killing. Wire when killed is very easy to handle. This killing is now done at the manufactory by stretching it over a drum after it has been passed between rollers to break out the splits. The expense of these operations will be amply repaid by a decrease of labour in erection and fewer interruptions of communication occasioned by breakage. It should also be observed that killed wire is scarcely acted upon by the wind at all, for it may be seen hanging comparatively still on the poles, while others which still retain their irregularities are swinging violently to and fro. These irregularities are also liable to occasion permanent contact, should the wires be blown together. Such an accident cannot occur with killed wire.

The operation of jointing telegraph wire is an important one, and demands great care. The most approved form of joint is that known as the Britannia, Fig. 7171. This joint is made by bending up the ends of the wires to be joined, binding them firmly together with binding wire, and afterwards soldering the whole. The binding wire used for this purpose is, for No. 8 gauge, No. 16 B. W. G., and for larger sizes, No. 14 B. W. G., of the best charcoal iron galvanized. A twisted joint is not so strong as the Britannia, because the twisting renders the iron more liable to break. Another objection to the twisted joint is its size, which increases its tendency to cling when the wires are blown together. However strongly a joint may be made, it is not secure as regards conducting power unless it is soldered. Even the method which is sometimes adopted, of cleaning the ends and casting an ingot of metal over them, is not sufficient. Electrolysis, and consequently corrosion, invariably occurs in every connection if moisture is present. Chloride of zinc

7171.

is used for soldering; but when applied to any but perfectly clean and bright wire, it should contain a sufficient quantity of free acid to dissolve the oxide and remove the dirt. It is important that the operation of soldering should be performed quickly, and at as low a temperature as possible, especially with hard wire; because the heat softens the metal and diminishes its tensile strength. As regards strength, joints are greatly superior to welds, but a practical difficulty prevents their general adoption. When the wires are blown together, joints are very liable to catch and cause permanent contact, occasioning, of course, a stoppage of communication. For this reason, they should not be used at a greater distance than 10 ft. from the poles. To get rid, as far as possible, of both joints and welds, it is desirable to draw the wire in long lengths. As much as 80 lbs. of No. 8 wire, equal to one-fifth of a mile in length, may be drawn in one piece.

To test the tensile strength of telegraph wire, it is usual to place a length of 10 in. in a hydraulic machine; this length is chosen to render the calculation of the percentage of strain and elongation easy and convenient. Tested in this way, a good piece of No. 8 wire will break with a strain of about 1300 lbs. If tested with a scale and weights, and sufficient time is allowed for the wire to stretch after each addition of weight, it will break with a less strain, or about 1100 lbs. That such should be the case is self-evident when we consider that elongation diminishes the sectional area of the wire. The scale and weights afford the best test, since it approximates more nearly to the actual conditions that obtain in practice. Good wire begins to stretch with about half the breaking strain. It has been ascertained that when a sample will break in the testing machine with a strain of 1300 lbs., a length of 88 yds., which is the distance from pole to pole when there are 20 to the mile, will break in practice with a strain of about 1000 lbs. The following Tables of examples of stretching and breaking strains are given by Culley. The first Table shows the results of 27 different samples tested in 10-in. lengths by the hydraulic apparatus.

	Means.	Extremes.
No. 8 Gauge.		
Diameter before testing	0·151 in.	0·147 to 0·153 in.
„ after having been broken	0·140 „	0·136 „ 0·144 „
Percentage of stretch before breaking	20	19 „ 25
Strain required to stretch the wire	672 lbs.	600 „ 750 lbs.
Breaking strain	1318 „	1250 „ 1440 „
No. 11 Gauge.		
Diameter before testing	0·115 in	0·112 „ 0·120 in.
„ after having been broken	0·106 „	0·100 „ 0·117 „
Percentage of stretch before breaking	20	19 „ 25
Strain required to stretch the wire	505 lbs.	400 „ 600 lbs.
Breaking strain	776 „	740 „ 850 „

The following are means of ten tests of wire of the same quality and from the same makers, tested in lengths of 33½ in. by *scale and weight*, adding 56 lbs. at a time, gently and without jerk, and waiting until the wire had ceased to stretch before adding more weight;—

Percentage of stretch before breaking	11·2
Strain required to stretch the wire	904 lbs.
Breaking strain	1132 „

The following trials show the effects of annealing and of galvanizing;—

No. 8 Iron.	Mean Breaking Strain.	Mean Percentage of Stretch before breaking.
No. 1 Sample.	lbs.	
Before galvanizing	1138	18·75
After „	1169	12·88
No. 2 Sample.		
Before galvanizing	1090	19·39
After „	1194	13·09

HOMOGENEOUS IRON, NOS. 11 AND 12.

	Breaking Strain.		Percentage of Stretch.	
	Mean.	Extremes.	Mean.	Extremes.
Before annealing	910 lbs.	830 to 1060 lbs.	·92	0·75 to 1·25
After „	612 „	560 „ 700 „	20·05	17·00 „ 21·50
Before galvanizing	612 „	560 „ 700 „	20·05	17·00 „ 21·50
After „	634 „	560 „ 700 „	11·64	9·00 „ 15·00

The process of galvanizing has been improved since these experiments were made, so that the elongation is not now so much affected.

The following Table, also due to Culley, shows some useful and important facts relating to iron telegraph wire.

B. W. Gauge.	Diameter.		Area of Section, square inches.	Weight of 100 Yards in lbs.	Weight of 1760 Yards in lbs.	Weight of 2029 Yards in lbs.	Length of 1 Cwt. in yards.	Breaking Strain in lbs.		B. W. Gauge.
	Inches.	Millimètres.						Soft Wire.	Hard Wire.	
00	0·363	9·21	0·103	102·00	1794	2068	110	8600	6000	00
0	0·331	8·40	0·086	84·72	1490	1718	132	7100	4750	0
1	0·300	7·61	0·071	68·75	1210	1395	162	6000	4000	1
2	0·280	7·11	0·062	59·90	1054	1215	187	4850	3400	2
3	0·260	6·60	0·053	51·65	909	1048	215	4000	2900	3
4	0·240	6·10	0·045	44·00	775	895	255	3400	2500	4
5	0·220	5·59	0·038	37·00	651	750	303	2950	2200	5
6	0·200	5·08	0·031	30·56	538	620	361	2500	1800	6
7	0·185	4·69	0·0265	26·15	461	531	428	2200	1520	7
8	0·170	4·31	0·023	22·10	389	448	509	1750	1200	8
9	0·155	3·93	0·0195	18·36	323	373	609	1500	950	9
10	0·140	3·55	0·016	14·97	264	305	747	1200	820	10
11	0·125	3·17	0·0125	11·95	211	244	939	820	650	11
12	0·110	2·79	0·010	9·24	163	188	1244	710	510	12
13	0·095	2·41	0·0071	7·05	124	143	1589	640	400	13
14	0·085	2·15	0·0057	5·51	97	112	2031	510	350	14
15	0·075	1·92	0·0044	4·29	76	87	2608	410	300	15
16	0·065	1·65	0·0033	3·22	57	66	3473	350	200	16
17	0·057	1·44	0·0026	2·48	44	50	4515	280	150	17
18	0·050	1·27	0·0020	1·91	34	39	5600	200	115	18
19	0·045	1·14	0·0016	1·55	27	31	7246	150	85	19
20	0·040	1·01	0·0013	1·22	21	24	9168	100	65	20
21	0·035	0·88	0·0010	0·94	17	20	11980	85	50	21
22	0·030	0·76	0·0007	0·69	12	14	16300	65	40	22

The Specification of the Electric Telegraph Company for iron wire was as follows;—

"The wire to be highly annealed, and very soft and pliable; it is not required to possess great tensile strength, but must be capable of elongating 18 per cent. without breaking after galvanizing.

"To be supplied in not less than 80-lb. pieces, and to be warranted not to contain any weld, join, or splice whatsoever, and to be free from all imperfections, flaws, sand splits, and other defects.

"The whole of the wire to be passed under and over three or more studs or pulleys placed in two lines, the wire passing over the pulleys in the upper line and under the others.

"The whole of the wire to be stretched 2 per cent. by machinery in the presence of the company's engineer or his representative, and to be tested, examined, and approved by him befor leaving the works. The wire after being stretched to be coiled carefully, so as to contain no bends but to resemble newly-drawn wire in its straightness.

"If during the process of testing the wire between the studs or pulleys, or during the process of stretching it, more than 5 per cent. of the bundles break, crack, or show any defect, the whole of the broken bundles to be rejected. If less than 5 per cent. prove defective, the wire will be accepted. The makers are not to attempt to weld, join, or otherwise splice any wire that may break or prove defective, but deliver it as it comes from the testing."

In ordering wire, a surplus of about 10 per cent. should be added as an allowance for slack and waste.

The size of the wire used for telegraph purposes is a matter of importance, and will to some extent be determined by the conditions under which the line is required to work. The accompanying diagram, Fig. 7172, shows the natural sizes of the wire used for telegraphic purposes. The larger the

7172.

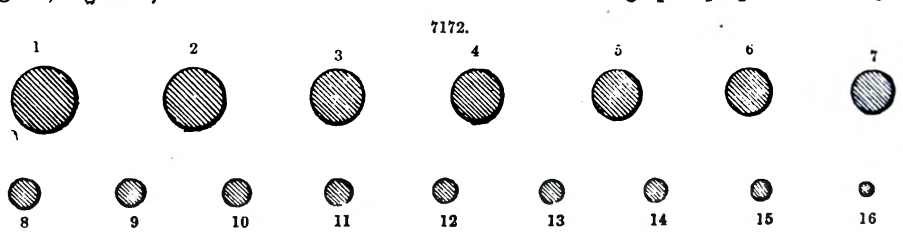

wire the greater its conducting power, and the less its electrical resistance as compared with that of the insulators. In other words, the larger the wire, the greater the strength of the signal, which can be transmitted through it to any given distance. Thus the effects of bad insulation can be compensated, at least to a considerable degree, by increasing the size of the wire. The size usually adopted is that known as No. 8, Birmingham wire gauge, and it has been proved in practice to be

amply sufficient in conducting power, when insulation is good, for circuits not exceeding 400 miles. For railway purposes and short circuits generally, if economy in first cost is an object of importance, smaller sizes may be used. No. 10 will in most cases be sufficiently large, and for circuits of 100 miles No. 11 may be employed. If the circuit does not exceed 50 miles the latter size will be ample. For military telegraphs, where the circuits are short, and the wire has to be run up quickly, No. 12 is a suitable size.

But in order to carry out economy in this direction, insulation must be good; for it must be borne in mind that the conductibility of a wire is, other things being equal, in proportion to its size. Many instances might be cited in which, for moderate circuits, a No. 8 wire having worked badly in consequence of imperfect insulation, the difficulty has been removed by the substitution of a larger wire. Culley relates how the Admiralty circuit of No. 8 wire between London and Devonport worked badly some years since when insulation was comparatively imperfect. Complaints having become frequent, a No. 4 wire was substituted between Bristol and Plymouth. This wire was not better insulated than the smaller one, perhaps even not so well; but as soon as it was placed in circuits the complaints ceased, and have not since been renewed. Again, a fault occurred in the underground wire between Leith and Edinburgh, connected with the London and Leith circuit, which was of No. 8 wire. In this case, as in the former, the substitution of a No. 4 wire removed all difficulty in working, and the repair of the faulty portion could be proceeded with at leisure.

The length of span, or the distance from one support to the next, is determined by numerous conflicting conditions. Obviously the fewer the supports, the better will be the insulation, and as a reduction in the number of the supports diminishes at the same time the cost of construction, there are weighty reasons for making the span as long as possible. In the early days of telegraphy, the poles were set 30 to the mile; this number has been reduced to 24, 20, and, in a few instances, 17. An increase of span, however, introduces other conditions which speedily render further progress in that direction unprofitable. It does not appear that the wires have a greater tendency to blow into contact with each other in long than in short spans, provided they be all of the same gauge and are equal in tension, as under such conditions they keep time together in their oscillations. This objection therefore, though it has frequently been urged, is not a grave one. But a more important objection, and one that renders a less number than 20 poles to the mile in most cases a practical impossibility, is the risk of accident consequent on the additional height of the poles, rendered necessary by the greater dip, and the increased strain on the wires. The number usually adopted as best fulfilling the conditions imposed is 22, which gives a distance of 80 yds. from pole to pole, a convenient number for calculation. The ordinary dip on the wires in a span of this length is about 18 in. in mild weather; this gives with No. 8 wire a strain of about 420 lbs., its breaking weight being, as we have seen, 1100 lbs. The strain varies directly as the weight of the wire, and inversely as the dip or versine. When the latter is constant, it increases as the square of the span, and when the strain remains constant, the dip or versine increases in like manner; or, $L^2 : l^2 :: V : v$. Thus if the dip be 18 in. when there are 22 poles to the mile and the strain 420 lbs., with 11 poles to the mile we shall have a dip of 6 ft., or, if the dip remain at 18 in., a strain of 1680 lbs. From this it will be at once seen that a span of such a length is practically impossible. To find the strain in lbs. and the dip in inches approximately, the following formulæ are given by Latimer Clark; $s = \frac{l^2 \times w}{31{\cdot}43 \times v}$, and $v = \frac{l^2 \times w}{31{\cdot}43 \times s}$, in which s is the strain, v the dip, l the length of span in feet, and w the weight in cwts. of one statute mile.

Another objection to the adoption of long spans is the friction of the wire upon its supports occasioned by the action of the wind. In some instances where the wire has been supported upon very hard and smooth brown ware, and the spans have been short, no appreciable wear has been caused by this means in twenty-four years. But when the spans are long, and especially when the wires are supported upon soft porcelain, the wear is very rapid. And it must be borne in mind that as soon as the zinc is rubbed off, galvanic action may be set up so as to corrode the iron. No. 11 wire so frequently breaks from this cause on long spans that it has been found necessary to protect it at the supports by wrapping it with binding wire. Even No. 4 has been chafed on spans of over 100 yds.

In wiring a line, allowance must be made for variations in temperature. With 20 poles to the mile, a dip of 14 in. in a No. 8 wire is equivalent to a strain of 540 lbs., and the difference in dip between 54° and 25° Fahr. has been ascertained to be 3 in., so that if a wire be pulled up to 14 in. in mild weather, it will assume at 25° a dip of 11 in. only, which is equivalent to a strain of 700 lbs., more than half its breaking strain. Culley mentions an experiment in which a 200-ft. length of No. 8 wire was suspended between two rigid supports so that the dip could be read off upon a scale. The results were a dip of 17 in. at 33°, 18·5 in. at 43°, 19·5 in. at 53°, and 20·25 in. at 63°.

The wire should be always tightly bound to the insulator, so as to reduce the friction to a minimum. Formerly it was usual to allow the wires to pass freely through the insulators, and to strain them by a drum or ratchet at every half mile. This method allowed a broken wire to run down half a mile in every case. The present practice is to bind the wire to every pole, so that it can never, if properly bound, run down more than 100 or 200 yds. The wire used for binding is No. 16, and care should be taken in applying it to make all the turns in the same direction, as otherwise it will not be firm; for the main wire is twisted somewhat in the process, and when it resumes its normal position, one side of the binding will be slackened, if the turns are made in opposite directions. When the position of the poles is changed, or when a line is reset, the wire should be carefully examined, and worn places either cut out, or, if the wear be slight, bound over with binding wire.

The distance through which a broken wire will run down is shown by the following experiments, related by Culley, to depend very much on the way in which it is bound;—

1. "On a line of 24 poles to the mile a No. 4 wire was bound with a single No. 16 wire at each insulator, and securely soldered so that it could not slip. When filed through in the middle of its length, it tore itself from the fastenings throughout the whole distance.

2. "Next it was bound as before, but soldered at every fourth pole. It then broke away from 20 poles only. Here the unsoldered bindings allowed it to slip a little, and so eased the strain.

3. "Thirdly, it was bound doubly strong, but not soldered. The first binding stretched a little, and all the arms were strained, but it did not tear itself away from a single pole. The wire, therefore, should be so bound as to slip a very little at each support, and so prevent a sudden jerk."

The wires should be placed as far apart as possible upon the poles, to prevent their being blown into contact with each other. As they are still more liable to contact in the vertical plane, arms of different lengths should be used so that the wires may not hang vertically one over the other, or when space is limited, the insulators may be alternate instead of opposite. By these means, the danger of a broken wire falling across the others is obviated.

Poles.—The material employed for telegraph poles is generally wood. Iron is, in many respects, a more suitable material, it is stronger for a given size, lighter in appearance, and far more durable; but the difference of cost is at present too great to allow it to compete successfully with wood. Except in certain cases, therefore, which we shall describe later, the latter material continues to be employed.

The dimensions of a wooden telegraph-pole are usually 18 ft. in length by a diameter of 5 in. at the upper end. For level crossings, bridges and terminal poles, greater lengths up to 25 ft. are required. In all cases they should contain the natural butt of the tree, the tops of trees being quite unsuitable for this purpose. The latter are sometimes employed where economy in first cost is considered to be of primary importance; but their rapid decay renders the subsequent cost of maintenance proportionately great, and when the difficulties attending a frequent resetting are taken into account, they must be considered as leading to a false economy. The kind of wood employed is generally larch; other kinds are, however, suitable. Memel pine is very durable, but is too expensive for common use. Pitch pine is still more lasting; the original poles on the London and South-Western Railway were of this pine, and many of them are still sound, 1874, though they were erected nearly thirty years ago. Spruce and Scotch fir decay very quickly, being scarcely equal in durability to the tops of larch trees.

Larch should be cut in the winter when the sap is down and seasoned with the bark on. The bark must, however, be removed as soon as the seasoning is complete, or the wood will be attacked by insects. During the process of seasoning, the poles should be so stacked that they may be exposed to the wind on all sides. Larch grown upon hilly ground is more durable than that raised in other situations, by reason of its containing more heartwood. But such poles are seldom straight. Unseasoned larch lasts, on an average, about seven years; when properly prepared and seasoned, it will last twice as long. If grown upon hilly ground, and having consequently the heartwood well developed, unseasoned larch will last from twelve to fifteen years. The durability of unseasoned poles may be considerably increased by charring them over a slow fire. But in such a case they should not be tarred or painted until they have stood long enough to become seasoned, or the wood will decay under the tar while remaining sound above. When the seasoning has advanced sufficiently, the ground around the pole should be opened for a depth of about a foot, and after the pole has become quite dry, the tar applied. The results will be more satisfactory if the tar be applied hot. With seasoned poles, the application of the tar should follow immediately the process of charring, before the wood has had time to cool.

Chemical means of preserving wood have been successfully applied to telegraph poles, and the constantly increasing cost of timber will probably lead to their general adoption. Only two processes have hitherto been found to give satisfactory results, namely, creosoting and boucherizing. The former does not fail in any soil, and it possesses the advantage of not corroding iron. The injection, however, can only be carried on at a large depôt, by reason of the appliances requisite. Boucherizing is free from this objection, as the necessary apparatus is both inexpensive and portable; and as the process may be readily overlooked and performed, it may be carried out in the forest. The method of creosoting is so well known that we need not describe it here; a few remarks on it will be found under Kyanizing.

Wooden poles should be set from one-fourth to one-fifth of their length in the ground, according to the nature of the soil and the strain they will have to bear. With a less depth of setting, they will not have a sufficient hold on the ground in wet weather. Even with a depth of one-fourth, poles are frequently blown out after a long rainy season, if the soil be weak. The severest strain is thrown upon the poles when a snow storm, in which the snow freezes upon the wires, is succeeded by a high wind. Against such a case no practical strength of construction seems secure.

On curves, and especially where the direction of the line is changed at an angle, stay-wires are required. These generally consist of two or three lengths of the line wire twisted together and fixed to a plate buried from 18 in. to 30 in. beneath the surface of the ground, or to some other more convenient object. About 5 per cent. of the wire used is required for stays.

Wooden poles decay most rapidly at the ground line, and they are frequently repaired by scarfing at their point. But to ensure satisfactory results, the repair must be effected before the decay has progressed far, and well seasoned or creosoted wood should be used for the scarfs. The experience of many telegraph engineers, however, seems to show that repairing poles does not pay.

Iron poles, on account of their more elegant appearance, are being substituted for wooden ones in towns. They are also very suitable for use in foreign and especially mountainous countries, because, being capable of separation into parts, their transport is more easily and cheaply effected. Another, and frequently a great advantage, is that they are proof against the ravages of the white ant. Figs. 7173, 7174, represent a wrought-iron tubular pole as manufactured by Warden and Co. It consists of two parts, a cast-iron base and a wrought-iron stem. The base is made in two halves,

and is 4 ft. in length, 3 ft. of this length being fixed below ground; the two halves embrace the stem, and are secured by bolts. The stem is a taper wrought-iron tube, from 15 to 22 ft. in length, making the length of the complete pole from 18 to 25 ft. The weight of the cast-iron base 110 lbs., and that of the 15-ft. stem 70 lbs., making the total weight of the 18-ft. pole 180 lbs. These poles are also manufactured in a form suitable for use on rock, where it is not possible to sink a pole of sufficient size to receive the ordinary base. The cast-iron base is, in this case, dispensed with, and the base of the tube is secured to the rock by means of a jagged bolt leaded into the rock. Iron stays of strong gas-pipe are used to support the pole. The stays have screwed ends attached to collars surrounding the pole at about 4 ft. from the ground, the lower ends being provided with jagged bolts also leaded into the rock. These poles are extensively used on the Delhi, Mauritius, and some other railways, where they are said to have been found very efficient.

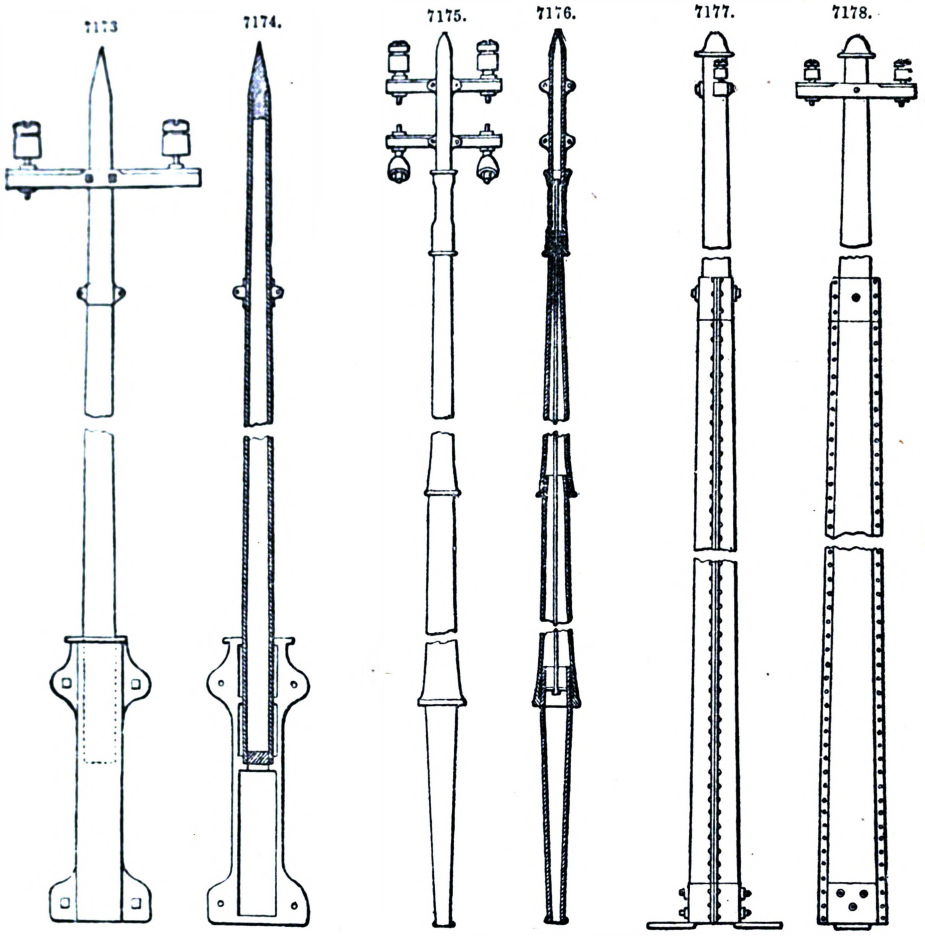

Figs. 7175, 7176, a cast-iron telescopic pole by the same makers. This pole is made in three pieces wholly of cast iron. The base is conical, the smaller end being fixed downwards, and the stem consists of two tubes tapering in the contrary direction to the base. The upper length sockets over the lower section, which in its turn sockets over the base; an iron rod or wire secured at both ends is passed through the interior of the pole to keep the parts firmly together when in use. A cast-iron socket-piece is fixed to the top of the pole, into which socket-piece a suitable support for the cross-arms and insulators is fitted.

These poles pack very conveniently for transit, the parts being so arranged that they slide one into the other for this purpose. The weight of an 18-ft. pole complete is about 2 cwt.

Figs. 7177, 7178, are of Morton's oval telegraph pole, consisting of a galvanized wrought-iron tapered tube, in two pieces, riveted together. The lower end of the tube is fitted with a cast-iron foot or base, and a wooden top, finished by a small galvanized cast-iron cap, which may or may not support an insulator, is socketed into the upper end of the tube. The section of the tube is oval, and the rib or flange containing the rivets, on each side of the pole, is further stiffened by a plate of iron inserted between the flanges; this adds greatly to the strength of the pole in the direction in which strength is chiefly required.

The galvanized-iron tube is 12 ft. in length. The wooden top varies according to the desired length of the pole; for an 18-ft. pole its length is 6 ft., and its diameter at top 3½ in. The weight of the tube and cast-iron foot is 98 lbs., and that of the wooden top, 20 lbs., making the total weight of an 18-ft. pole complete, 118 lbs.

Insulators.—There are many substances which insulate well, but which, from their not possessing certain other qualities, are quite unsuitable for purposes of insulation. In choosing a material

a primary point is to ascertain whether it will insulate perfectly independently of the nature of its surface, for it must be borne in mind that the process of glazing an insulator is not to improve the insulating qualities of the material, but to give it a hard smooth surface that shall be an advantage in other respects, the object of glazing being chiefly to prevent the wearing of the wire by friction, and the adhesion of dust and dirt. Another condition is that the material shall resist the deposition and the retention of moisture. Thus a porous substance is quite unsuitable. The only material that insulates perfectly and possesses naturally a hard smooth surface is glass; but experience has shown it to possess also certain defects which have rendered its abandonment necessary. Moisture is very rapidly deposited on it, and in such a way as to form a continuous film, and its fragility is such that it cannot be relied upon. It is, however, still extensively used in Switzerland, and a novel form of insulator of blown-glass has been introduced in America. The form is that of a narrow-necked bottle, and several trials made to test its efficiency are said to have given satisfactory results. Ebonite is for a time the best available material for insulators; it insulates well, it very effectively resists the deposition of moisture, and it is very strong; but a few months' exposure to atmospheric influences makes its surface rough and spongy, and consequently favourable to the retention of moisture and dust. When in this state, it is inferior to earthenware; but we have only to re-polish it to render its behaviour as good as when first erected. Such a defect, however, renders it unsuitable for general adoption. Next to glass, porcelain possesses the best surface for resisting accumulations of dust and dirt, and for this reason it is selected wherever the line is exposed to smoke, dust, or salt spray. It does not appear to insulate better than good stoneware, whilst its cost is much greater. Brown stoneware is the cheapest, and for ordinary use the best, material for insulators. It is usually made from clay dug on the spot, and as it does not require an admixture of other materials, it is likely to be uniformly good.

The forms of insulators are very various. The most approved, and those which are now most commonly used, are known as Clark's and Varley's. Figs. 7179, 7180, represent Clark's insulators in elevation and section. It consists of a double bell in white porcelain, and is provided with a taper galvanized wrought-iron stem. This form of insulator is extensively used, and when of brown stoneware is found to be both efficient and economical. Figs. 7181, 7182, are of Varley's double insulator. It is of brown stoneware, and is fitted with galvanized wrought-iron shoulder-bolt and nut. These insulators consist of an outer and an inner bell, manufactured and tested separately before union. They are made in three sizes to suit No. 4, No. 8, and No. 11 wire. For efficiency and economy of maintenance this form of insulator is probably unequalled. Figs. 7183, 7184, an iron-protected insulator, consisting of a double bell of either white porcelain or stoneware, protected by

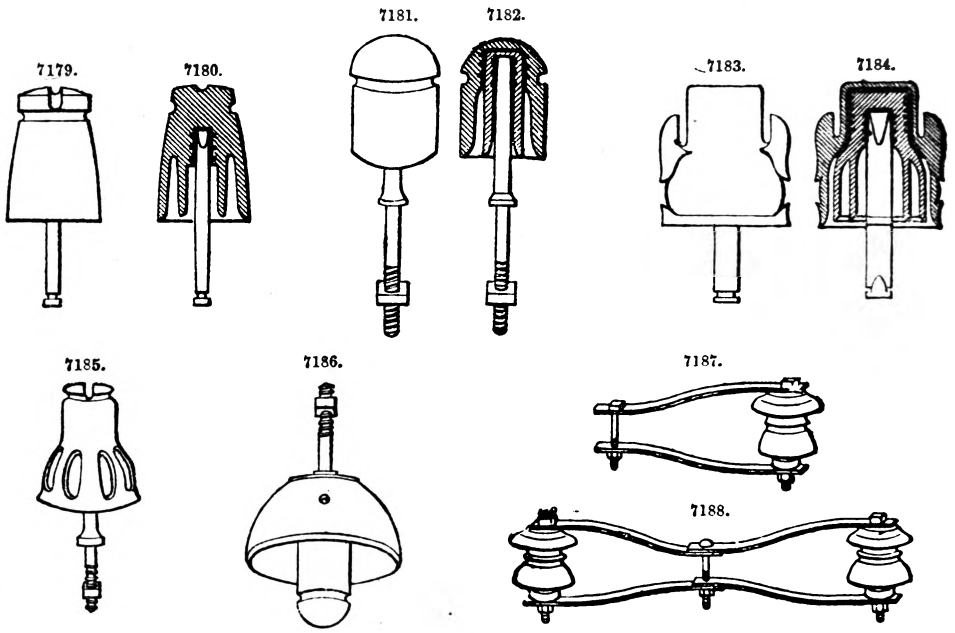

a galvanized cast-iron cap, and provided with a galvanized steel, or wrought-iron stem. Fig. 7185 is another iron-protected insulator also consisting of a double bell of either porcelain or stoneware, and protected by a galvanized cast-iron cap perforated to admit of the lower portion of the insulator being washed by the rain. Fig. 7186 is a common form of terminal insulator, known as the umbrella form. It usually consists of a stout insulator of either porcelain or stoneware, and is provided with a strong galvanized bolt, with nut and washers, so as to be suitable for both wooden and iron arms. Bright's double-bell shackle insulator for terminating wires is represented in Fig. 7187. These are of porcelain, and the straps and bolts are either painted or galvanized. This form of insulator may be fitted in pairs, as shown in Fig. 7188, for terminating and leading in wires to stations, or for use on sharp curves and at angles.

The advantages of iron caps have been greatly overrated. Indeed, it seems probable that, except in certain exposed situations, their use is attended with positive disadvantage; for, though they

keep the outer surface dry, they do not prevent the accumulation of dust, and they afford a harbour for insects, especially spiders, whose webs conduct when damp. Moreover, they do not altogether prevent the deposition of moisture, so that this advantage which is claimed for them is not wholly real, while, by protecting the surface from the washing action of the rain, they tend to aggravate the evil caused by dust. The only means of protecting insulators against the latter is to make their surfaces hard and smooth, and then to leave them completely exposed to the weather. This is especially the case with coast lines, where the deposition of salt is more troublesome than dust. For this reason an insulator should not be placed under an arm, but above it, as in the former case the surface of the insulator is partially protected, and is consequently always dirty. In some parts insects are very troublesome, and when the line passes near or under trees, it is well to make the openings of the insulators wide so as to be less attractive to insects and more easily cleaned. Paraffin oil is perfectly effectual in repelling insects for a time, and it possesses the additional advantage of improving the insulation; the latter effect will last six months. Creosote in the poles will also repel insects so long as its smell remains.

To test insulators in the trough, place the insulating cup in a vessel of water made slightly acid; some acidulated water being poured into the cup, smear a little turps on the rim, and let it remain twenty-four hours. At the expiration of this time immerse the poles of a battery in the water, one inside and the other outside the cup, a very sensible galvanometer having been included in the circuit. If the needle exhibits any deflection, the circuit is complete, and consequently the insulator is imperfect. The imperfection usually arises from porosity and cracks in the material.

Culley gives the following method of ascertaining approximately the comparative value of different shapes;—

"The best method of testing is to fix as large a number as convenient, certainly not less than ten of each kind, upon a pole, connecting them by a wire to the present line wire, and fixing a second independent wire to their bolts, to represent the earth, and to determine the leakage from one wire to the other.

"To obtain good results, the following precautions are necessary:—Fix a pole not less than 20 ft. high in an open place not sheltered in any way on any side, place the arms on which the insulators are to be fixed at least 2 ft. apart, the insulators themselves a foot apart. Do not place all of the same kind together, but rather alternate or mix them as much as possible so as to obtain an average of exposure for all.

"Take special care that the wire representing the line touches each one closely all round and uniformly as to the number of turns; let it be all the same gauge. The object is to ensure equal surfaces of metal in contact with the porcelain, because the leakage takes place from each point of the wire over the surface of the insulator, and consequently if the wire does not touch uniformly, the leakage will vary with the variation of the surfaces in contact. If possible, divide each set of ten in half, making duplicate sets of five each. If these do not test alike, there is probably a defective insulator among them, which will vitiate the test, and which must be removed. Never use separate gutta-percha or other insulated leads from each set to the testing room, for these will become more or less damp on their surface, and will vary in insulation, one from the other, more perhaps than the insulators themselves. Use only one wire, employing a man to shift it from one set to the other.

"It is seldom that rain falls steadily and uniformly, so that if the testing lasts even five minutes there will often be a considerable difference in the amount of moisture during the interval. After testing all the sets, commence again in the reverse order; if the two series agree, the observation is a good one. As the object of such tests is not so much to find the *absolute* resistance of the several specimens as to ascertain their *relative* value, it is better not to occupy time in testing units, but rather to read a simple deflection so that the tests may be made as rapidly as possible, ensuring the greatest possible uniformity of circumstance; but, with the greatest precaution, the tests will frequently be extremely anomalous.

"Speaking generally, the best insulator is not that which tests best when quite new, but that which bears exposure the best; and therefore no tests are of any value which have not extended over several months. However carefully this experimental testing may be conducted, it is not altogether satisfactory; the only true method is to insulate two wires on the same poles for a distance of ten miles or more, and to test them every damp day for six months. It is useless in any case to test in dry weather.

"I will give the result of tests made in a situation quite free from insects, but somewhat smoky —Gloucester Road, Regent's Park, during twelve months, 1868–69;—

Mean Comparative Loss.

Brooks' double cup (*American glass*)	5	parts	leakage
Varley's ordinary size	20	„	„
Porcelain	26	„	„
Double cones, porcelain	51	„	„
Shackles „	82	„	„

"The porcelain insulators were very much wider than the Varley's to render them less liable to be blocked up by insects. The test, therefore, does not show the difference between stoneware and porcelain so much as that between a wide and a narrow opening.

"The effect of iron caps may be judged from the following;—

Porcelain, without caps	38	parts	leakage.
„ with open caps (or cages)	44	„	„
„ with closed caps	55	„	„
Small earthenware insulator, without caps ..	40	„	„
„ „ „ with open caps	50	„	„

"The tests also show that with a wide cup a bracket gives a better result than an arm, probably because splashing is avoided; the leakage being 26 and 38 respectively.

"New insulators may be dipped while dry and hot in melted paraffin with excellent results, but it is not certain whether the surface may not retain dirt more easily."

On short lines, good insulation is of less importance than on long lines. When, therefore, the line is a short one, simple and cheap insulators may be used, and their maintenance need not be very carefully looked after; but when the line is long, it becomes necessary to employ the best kinds, and to keep them in a perfect condition. If the insulation is defective, and there are no practicable means for improving it, the resistance must be lessened. This may be effected either by using a larger wire, or by diminishing the resistance of the apparatus. A method of reducing the resistance on long lines by the use of shunts has recently been tried with good results.

Earth Wires and Plates.—The use of earth wires being to intercept leakage and to convey it to earth, it follows that they must make good earth or their effect will be rather injurious than otherwise. A good earth connection may be formed by attaching a thick wire to the pole, and coiling it in a spiral beneath the foot. When the soil becomes dry from long drought, the earth wires become partially insulated, and they do not make good earth until the ground has become damp. The evils resulting from this may, in some degree, be avoided by placing the wires deep in the ground, or in some cases, by conveying them to damp ground. From the main wire which is fixed to the side of the pole, branches of binding wire are carried to the insulators. They should be soldered to the insulator bolts or to the iron bracket holding the insulator, these brackets being provided with a tinned iron pin for that purpose. When wooden arms are used, the earth wires may be wrapped closely round them, or sunk in a saw groove. To convey the leakage through the wood, as well as that over its surface, to earth, they are screwed tightly between the head of the bolt by which the arm is fixed, and its washer. This method is, however, not so effectual as the former. If it is necessary to use earth wires on viaducts, they must be run from pole to pole and put to earth at the nearest convenient place.

The shorter the circuit, the more need there is for a good earth connection. Frequently the inefficiency of a telegraph is due to the want of such a connection. In some localities this difficulty makes itself felt more than in others, those places being especially unfavourable where the rock lies close to the surface. The plates used to form the earth connection, called earth plates, are of copper, and they should be buried in the upright position in a narrow trench, which should be filled up on each side with smith's ashes or wood charcoal. Frequently good earth cannot be obtained from a single plate, and in such a case others must be put down at distances of 20 or 30 yds. apart and connected by wires. When there are several circuits, the earth plates provided for each must be placed at such a distance apart that the resistance of the soil between them may be much greater than that of the shortest circuit. If this should be impracticable, it will be necessary to increase the resistance of the shorter circuits by means of resistance coils, otherwise the tendency to leakage from the circuit of greater to that of lesser resistance will make itself felt. When water or gas pipes are conveniently situate, they may be employed instead of earth plates. The former are preferable to the latter. Lead pipes are objectionable, for if the earth connection at one end of the circuit be a lead pipe and at the other end an iron pipe, a permanent current will be set up. For this reason, it is safer to make a connection with a pipe out of doors.

Underground Wires.—In towns it is often necessary, or at least convenient, to place a line of telegraph underground. Some years ago attempts were made to employ the system more extensively, but these attempts ended in failure. The success, however, which has attended the use of underground lines recently laid in towns shows that failure in the former case was due to bad manufacture and imperfect methods. But though an underground line, if laid now, throughout a great number of miles, would certainly be an engineering success, it would fail commercially on account of the great excess of cost over pole-work. It is not, therefore, likely that an attempt will be again made to extend the system beyond the boundaries of towns, though within those limits its adoption will probably soon become general.

The mode of laying underground wires is either to draw them into a pipe, or to place them in a kind of trough fitted with a movable cover. There are advantages attending each of these methods. The wires can be much more easily laid into the trough than drawn into the pipe, and there is also less risk of injuring them during the process; but, on the other hand, it is much more difficult to execute repairs in the former than in the latter. Pipes are more frequently employed than troughs, and they have been found in all cases to fulfil the purpose required very efficiently. They are usually laid under the flagstones, and at every hundred yards, or closer, if the line be curved, are placed oblong drawing-in boxes, 30 in. by 11 in. and 12 in. deep; these boxes are provided with lids formed of an iron frame, into which a piece of flagstone is set. To prevent rust, the pipes should be tarred inside while hot.

Each wire is usually spun over with tape. The percha and tape or hemp, if the latter be used, should be well covered with Stockholm tar and sprinkled with dry, sharp sand. Gas tar should be avoided, as its action is injurious. It has been proposed to employ bitumen instead of percha or rubber, on account of the cost of the latter substances. Bitumen insulates very well, but with the present methods of applying it, it does not appear to give satisfactory results.

The wires are sometimes put together in cables 400 yds. in length, and covered with braided hemp; but more commonly they are simply tied together in bundles. When repairs are required a new cable is connected in a loop between the sound and the faulty portions at one of the drawing-in boxes, so that the act of drawing out the old cable pulls in the new. The joints should always be made at the same part of the cable, that they may be readily found when necessary. All joints must be tested by the accumulation process, and the conductibility and insulation of each length fully ascertained both before the wires are laid and after. Indeed, almost as much care is required for a long subterranean line as for a submarine cable.

It has been found that when a buried wire becomes faulty from the conductor having become

exposed through a defect in the coating, the action of the positive current in signalling decomposes the salts contained in the soil, and forms combination with the copper of the wire. This tends to make the insulation appear better, while the negative current increases the leakage by depositing copper upon the wire and breaking up the badly-conducting mass formed by the copper current. For this reason the zinc current is always used in testing insulated wires. It may be remarked here, because the precaution is often neglected by workmen, that testing exposed pieces of covered wire should be carried on in damp weather, for in dry weather a serious fault will hardly make itself apparent upon the apparatus employed. It is also well to accustom workmen to use a sensitive galvanometer in testing, as they usually judge of the degree of leakage by the amount of deflection shown on the instrument irrespective of its sensibility. A buried wire may be tested for insulation by the tongue by ascertaining how long it will retain sufficient charge to produce a shock. It is charged by a battery, allowed to remain insulated from one to ten minutes, and then placed upon the tongue or the lips. This method is said to be extensively employed in the United States.

Testing Joints and for Distance of Fault.—The following lucid description of the methods of testing for the distance of a fault and of testing the joints in insulated wire is due to R. S. Culley.

"The methods of ascertaining the distance of a fault, measured in terms of resistance, in a cable where a wire is not broken, are as follows;—

"First, let it be supposed that a perfect earth connection exists at the fault. Then the resistance from either station measures the distance from that station; that is, if the resistance is 28, and the resistance a mile 14, the fault is two miles off. By testing from one station only, no one can know whether an earth connection has a sensible resistance or not, or what that resistance is. This test should only be used when the wire is broken, as well as to earth, and it only affords a means of roughly guessing the position of the fault.

"Second, let it be supposed that the fault is caused by an earth connection of some definite unknown resistance. In this case we may test from both stations, measuring the resistance each way, while the other end of the wire is insulated. Let these measured resistances be R and R'. Then we have the two equations,

$$\left.\begin{aligned} x + a &= \mathrm{R} \text{ where } x = \text{distance from one end} \\ y + a &= \mathrm{R}' \quad ,, \quad y = \quad ,, \quad ,, \text{ other } ,, \end{aligned}\right\} \text{ in terms of resistance.}$$

$$,, \quad a = \text{resistance of fault.}$$

$$\text{and also } x + y = \mathrm{L} \quad ,, \quad \mathrm{L} = \text{known resistance of whole line;}$$

$$\text{hence} \qquad x = \frac{\mathrm{L} + (\mathrm{R} - \mathrm{R}')}{2}.$$

"If the resistance a remains sensibly constant, or is small compared with x and y, this will give a very good approximation. But there may not be two men capable of testing at the stations, or only one set of instruments, and then the following test, from one station only, may be employed. First, measure resistance of the line when the far end is insulated; call this resistance I. Then measure resistance with far end of earth; call this resistance e, which will be less than the previous one, and let L = resistance of line as before, then we have,

$$\text{First, } x + a = \mathrm{I}.$$

$$\text{Second, } \frac{1}{x + \frac{1}{a} + \frac{1}{y}} = e.$$

$$\text{Third, } x + y = \mathrm{L}.$$

$$\text{Hence } x = e - \sqrt{(\mathrm{L} - e)\,(\mathrm{I} - e)}.$$

But this test also assumes a to be a constant quantity, which, unfortunately, it very seldom is. The earth connection is generally accompanied by some moisture, and the electrolysis produced by the very currents used in testing, alters the resistance of that connection.

"Hence, the following test, due to C. F. Varley, in which the resistance of the fault, whether great or small, constant or varying, does not affect the accuracy of the result, should be employed whenever possible. It can, however, only be used where a good or well-insulated return wire from the far station is available.

Let 2 L = resistance of the two lines.
y = distance of fault from testing station—in resistance.
x = distance from far station.

First make the connection shown in Fig. 7190, by which no part of the line is to earth except at fault. L' line with fault in it. L well-insulated line. Let S be the value of the coils when adjusted, so as to bring the differential galvanometer to zero, then $\mathrm{S} = 2x + 2y$, and the resistance of the fault will in no way affect this test, since the fault itself does not form part of the circuit. If the resistance of L has been determined previously, this test may be omitted.

7189.

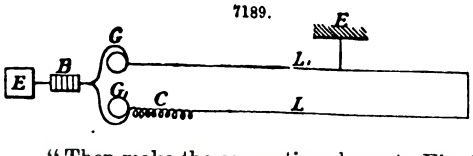

7190.

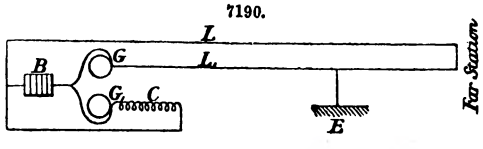

"Then make the connection shown in Fig. 7189. Adjust the coils afresh till the galvanometer needle is brought to zero, and the resistance C then added by the coils will be such that

$C + y = y + 2x$, or $C = 2x$. The fault of which the resistance is unknown, is of course equally added to the two circuits in connection with the two branches of the galvanometer, and has therefore no effect on the resistance C, required to bring the needle to zero. It will be observed that $\frac{C}{S} = \frac{2x}{2(y \pm x)} = \frac{x}{L}$ expresses the fraction of the whole line, separating the fault from the distant station. It is in this way Varley uses his test; the inspector puts a handle in one position, adjusts his coils till the needle is at zero, writes down the number as denominator, moves the handle to a second position, adjusts the coils again, and writes the second number as numerator, the fraction gives the position of the fault as above; we can, however, easily if we please, calculate y in function of resistance, and obtain $y = \frac{S - C}{2}$.

"The plan of observing the numbers, and using them to form a fraction, is, however, found well suited to workmen or telegraph clerks.

"When the line is absolutely broken, the accident must be classed under a different head. The absence of continuity does not allow any use to be made of the distant station. If the line is in perfect contact with the earth where broken, the measurement of its resistance will give the distance in function of resistance; but if the contact is imperfect, this measurement only gives the sum of the resistance due to the distance, and that due to the fault. The resistance of the fault cannot then be accurately measured.

"If the line where broken is insulated, and the line is, moreover, well insulated up to the fault, the following test, called the discharge test, gives some clue to the position of the fracture. The home end of the line A, Fig. 7191, is connected with one pole of a battery B for a little while, it is then, by a key, suddenly connected to C, one end of a galvanometer coil, the other end of which is to earth. The statical discharge induced on the wire by the action of the earth and the battery is thus discharged through the galvanometer, the needle of which is thrown more or less violently to one side; the throw is greatest on a long line, and shortest on a short line. If the line were uniform throughout, the sine of half the angle of the throw, with a given electro-motive force of the battery, would be proportional to the length of the line. The distance of the break or rupture could thus be determined, if the discharge from any known length were known; in dry weather, on a good line, this test may occasionally be used with great advantage.

7191.

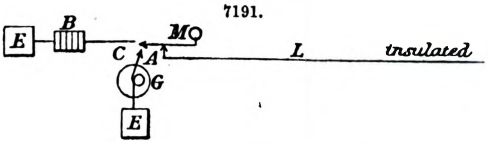

7192.

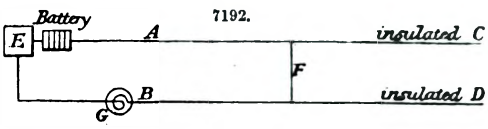

"Accidental contact between wires is shown by a return current on the second line, connected as in Fig. 7192, the resistance A + B gives twice the distance if the contact is perfect. If the contact is imperfect, or is due to bad insulators, the proportion between the current starting from A, and returning to B, when C and D are insulated, gives some rough idea of the degree of importance of the defect, whether much or little. In Fig. 7192, F is the conductor connecting the two lines, and causing fault.

"We will now consider the more difficult problem, of a cable where all the wires are broken and exposed. The ordinary tests merely give a maximum distance within which the fault must lie, but this distance is never accurate within three or four miles. The following method will be correct, within half a mile, or less, if the length and resistance per mile of the cable are correctly known.

"The difficulty of the problem arises from several causes:—

"1. As the ends are exposed, they form galvanic elements or batteries, with the iron sheath and the salt water, so that a + current flows from the cable, through the testing galvanometer, to earth; this is steady and constant if the cable is not disturbed.

"2. We have to deal with two unknown resistances; that of the wire itself, and that between the exposed end and the earth; the first is constant, the second very variable, because—

"3. The action of the current alters the resistance at the point at which the metal touches the water, by coating it with substances which differ in conductibility; and at the same time the apparent resistance is still further altered by the currents of polarization set up by these substances.

"The action which takes place can be shown by placing a piece of cable in a glass filled with salt water, and applying a current from forty or fifty cells, one pole of the battery being connected to the iron sheath, the other to the copper conducting wire. The portion of the cable connected to the zinc, gives off a stream of hydrogen, while the other becomes coated with a chloride of the metal. Thus, if the negative pole is connected to the conductor, and the positive to the sheath, chloride of iron is formed, and if the connections are reversed, chloride of copper is produced.

"Let us now connect a galvanometer to the cable, in such a manner that the current from the cable battery of copper and iron in salt water, called the 'cable current,' shall deflect the needle to the *right;* the iron element being, of course, always on the earth. If a negative current is now sent into the cable, its direction coincides with that of the cable current, and does not affect the direction of the deflection. But the superior force of the testing battery overcomes the cable current, and polarizes its elements. The copper wire becomes coated with hydrogen, the iron sheath with chloride of iron, so that when the testing battery current is cut off, and the cable battery is again free to act, its action is reversed, and the needle moves to the *left*, under the influence of the current of polarization. But the hydrogen gradually enters into combination and disappears from the wire, the polarization ceases, the needle returns towards zero, passes it, and finally takes up its former position to the right, under the influence of the cable battery in its normal state. On the other hand,

if we test with copper instead of zinc, the needle is deflected to the left, the cable battery again acts as a decomposition cell, but the polarization is now in an opposite direction, the copper being coated with its chloride, and the iron with hydrogen. When the testing current ceases, the needle therefore moves to the right, and continues permanently deflected in that direction, because the normal current from the cable battery is now in the same direction as the current of polarization.

"If we apply a succession of short zinc currents, after the wire has been coated with the chloride, the needle will take up a right-hand deflection after the battery contact has been broken; but the deflection will decrease after each test, and will finally be reversed. The deflection to the right is due to the polarization set up by the chloride of copper, each application of the zinc current reduces a portion of this chloride, and assists also in removing it mechanically by the action of the hydrogen, until after a time the chloride disappears, and is replaced by hydrogen. The sign of the polarization is then changed, and the direction of the needle changed also. But there is a moment when the opposite actions of the hydrogen and chloride are apparently balanced, so that the cable battery is inert, and the end of the wire unpolarized and probably uncoated. Then, and then only, can its correct resistance be determined. The object of the special method of test is to produce this condition.

"The test for distance is best made with a differential galvanometer. First ascertain the approximate resistance in the ordinary way, and clean the end of the wire from the dirt and the salts with which it will be coated, by applying a zinc current for several hours, occasionally reversing it to get rid of any deposit of soda which may occur. The surface will be roughened by the re-deposit of the copper, which has been dissolved, and will therefore more readily throw off the hydrogen evolved by the zinc current. Next, apply a positive current for the purpose of coating the wire with chloride of copper, and finally test with the negative current. The action of the current set up by the chloride of copper will make the resistance appear less than it really is; but as the chloride is gradually reduced by the testing current, in the manner which has just been explained, the resistance will appear to increase, moment by moment, and the resistance coils must be lengthened, unit by unit, to balance the resistance of the cable, so as to keep the needle at zero, until it passes over to the opposite side suddenly, under the influence of the change of polarization, caused by the copious evolution of hydrogen, which will follow. The increase of apparent resistance, and the consequent movement of the needle, is slow and gradual, so long as the hydrogen is employed in reducing the chloride; but after the reduction is complete, and the chloride has disappeared, the increase in resistance is enormous and almost instantaneous. Unless, therefore, the resistance of the cable has been carefully balanced, so as to follow the variation of the current throughout, the test will not succeed, because the neutral condition lasts too short a time to permit the adjustment of the resistance coils.

"In any case a certain dexterity is required, which can only be obtained by practice; but fortunately the practice may be had conveniently upon an artificial fault, or a piece of percha wire in a tin can, filled with salt water, and connected to a set of resistance coils. Induction does not affect the test, and as in any ordinary cable the insulation is practically perfect, its resistance can be represented as accurately by a rheostat as by an actual cable. The higher the tension of the battery, the less does the opposing current of polarization affect the result, for its force seldom exceeds two or three cells. The measurement is therefore made with a battery of as high a tension as can be conveniently procured, sixty cells or more.

"The behaviour of a fault varies with the length of wire exposed, a short end polarizes and depolarizes very rapidly, its changes in resistance are correspondingly rapid and its resistance great. If the end is long, the changes are slower and are more readily observed; the resistance of the fault is also less.

"After having well studied the changes of the fault itself, make an artificial fault by placing a piece of the cable core in a tin can filled with salt water, and alter the length of the exposed wire until it behaves in the same manner as the cable, and then find its resistance, which will be very nearly the same as the real fault; so that the distance of the break will be the tested resistance of the cable less that of the artificial fault.

Inches of copper wire exposed ..	$\frac{1}{8}$		$\frac{1}{4}$		$\frac{1}{2}$		$\frac{3}{4}$		1	
No. of cells used	6	60	6	60	6	60	6	60	6	60
Units of line added 25	296	96	270	84	259	79	233	75	226	72
50	325	121	299	109	287	104	261	100	255	98
100	385	172	357	160	345	155	319	151	312	148
150	443	223	416	211	403	205	376	202	369	199
200	502	274	475	262	461	256	433	253	426	250
250	561	325	533	313	519	307	489	304	482	301
300	620	376	592	364	577	358	546	355	539	352
350	679	427	651	415	636	409	603	406	596	402
400	738	478	709	466	694	460	660	457	653	453
450	796	529	767	516	752	510	716	507	709	503
500	856	580	825	567	810	561	773	558	766	554
1000	1440	1090	1406	1076	1392	1070	1339	1066	1332	1062

"The foregoing table was formed upon a piece of the Dunwich-Zandvoort cable, in a vessel of sea-water, and shows the manner in which the apparent resistance varies with the tension of the battery, the resistance added by the rheostat to represent the cable, and the length of the exposed wire.

"It is a convenient plan to form a table of the resistance of ends of various lengths with six and sixty cells, adding resistance by a rheostat, using the negative current and allowing the end to take up its maximum resistance. The tests with the six cells will be always higher than those with sixty, that is to say, the resistance of the end will always appear higher when tested with the lower power, and the difference between the apparent and real resistance will also increase gradually, as the length of the cable itself, or the resistance added by a rheostat increases; the length of exposed wire being constant.

"If a cable is found to give, with six and sixty cells, two results corresponding to some two in the table; it is probable that the length and resistance of the end is the same as that of the artificial fault used in the formation of the table, and therefore that the resistance between the testing station and the fault is equal to the resistance added to the artificial fault.

"So much, however, depends upon the manner in which the tests for the table were taken, or upon what we may call the 'personal equation' of the observer, that everyone should form a table for himself. The cable must be treated in precisely the same manner as the artificial fault, and therefore no table will be perfectly correct unless it is made just before the table is tested, in order that the precise manipulation may not be forgotten.

"*The Testing of Joints in Insulated Wire.*—A joint should insulate as well, or nearly as well, as an equal length of the perfect core, and the object of the test is to ascertain if this be the case. Now the leakage, even from a considerable length of good core, is too small to affect the galvanometer; but, although the electricity which escapes moment by moment cannot be measured, still if it were possible to store up the loss during a minute, and compel it to pass instantaneously through the coils, it would produce a sensible deflection.

"In order to effect this recourse is had to induction; a metallic trough, sufficiently large to contain 2 ft. or 3 ft. of the core, is suspended by straps or rods of polished ebonite, 2 ft. or even 3 ft. long. A small condenser is attached to increase its inductive capacity and enable it to store up the electricity which may leak through the percha. The testing battery, of not less than 200 cells, is insulated in a similar manner, and all loss over the surface of the conducting wires is prevented by paring their ends, so as to expose a fresh clean surface, or even by coating them with hot paraffin.

"To ascertain if the apparatus is sufficiently insulated, the trough and condenser are charged, and the swing of the needle, from an immediate discharge, noted. They are then re-charged, and left free for a time equal to that to be occupied by the test, and again discharged. The difference in the swing shows the loss in the time, and should be very small.

"The joint is placed in the trough, a negative current is applied to the cable, and the positive pole of the battery is connected to the outside coating of the condenser. Any leakage which may occur through the percha is by this arrangement accumulated in the condenser, and may be discharged through the galvanometer after any given interval.

"It is possible to find how much is lost by defective insulation during the joint test itself; but as both core and joint are subject to the same conditions, and the object is simply to see if one insulates as well as the other, this precaution does not seem to be absolutely necessary.

"To make the test. 1st. Place the joint in the trough—leave one end of the cable free; connect the copper pole of the battery to the galvanometer; connect the other terminal of the galvanometer to the trough; and, finally, charge the cable by applying the zinc pole. The charge within the cable acts inductively upon the natural electricity of the trough, the wire being in fact the inner, and the water the outer coating of a Leyden jar. A portion of the negative electricity of the water is set free, and an equal quantity of the positive is held fast or disguised by the negative charge within the cable. The free electricity is at once neutralized by the action of the battery; if it were not so arranged, it would increase the apparent leakage from the cable, being of a similar sign. The deflection or swing due to the discharge being instantaneous, it follows that if the needle *remains* deflected after the discharge, the joint is very bad, or there is leakage over the surface of the percha. The latter may be conducted to earth so as not to interfere with the test, by wrapping an earth wire round the core a few feet from the free end.

"2nd. Without disturbing the charge of either cable or trough, connect one coating of the condenser to the trough, the other coating to the + pole of the battery, the zinc being to the cable as before. Any negative electricity which may leak from the cable will now accumulate in the condenser. Allow one minute for this.

"3rd. Disconnect the condenser from the trough and battery, and discharge it through the galvanometer. If the trough and other parts of the apparatus have been well insulated, the swing will show the accumulated leakage from the portion of core under test. It is evident that these charges must be made by perfectly insulated keys and commutators.

"It often occurs when there are several wires in the cable, that the apparent leakage is greater from the joint which is first tested than from any other joints tested at the same time. This arises from the charge in the first wire acting upon the others inductively. The wires not under test should, therefore, be put to earth until they are wanted, and the condenser and trough should be perfectly discharged between each test.

"It will be understood that the results are simply comparative, not absolute; all that the method effects is to show the difference between the insulation of a joint and that of any other part of the core.

"This method somewhat differs from that ordinarily adopted. It is usual to put one pole of the battery to earth; but in this case leakage takes place over the whole cable, however long it may be. By the plan described, the leakage is confined to the part in the trough, and the whole force of the battery is concentrated there, and the apparent leakage exaggerated."

Submarine Telegraph Cables.—The nature and the construction of submarine telegraph cables are so clearly and fully described in the following extract from a paper read by Fleeming Jenkin before the Institution of Mechanical Engineers, that we need do no more than quote it here;—

The essential parts of a submarine telegraph cable are, a conductor along which the electric

current may flow, and an insulator to surround the conductor and completely prevent it from coming in contact with the water. In selecting wire, the method followed by the manufacturers of telegraph cables is to select, by electrical test, a wire whose conducting power is about 20 per cent. less than that of pure copper.

In the common cable a wire or strand of copper forms the conductor, which is covered and insulated by gutta-percha. This core of gutta-percha covered wire is served with tarred yarn, round which a greater or less number of iron wires are laid spirally, to afford longitudinal strength and lateral protection.

A cable of this class is shown in Figs. 7193 to 7195, which represent the Malta and Alexandria telegraph cable, laid in 1861, drawn full size; the copper conducting core A, Fig. 7195, is shown black in section, and is surrounded by three coatings of the insulating gutta-percha B.

7193.

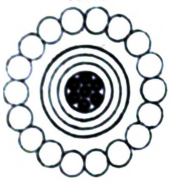

7194.

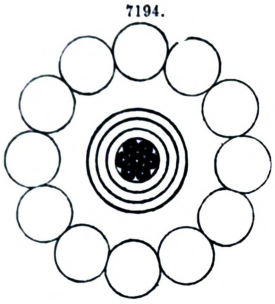

7195.

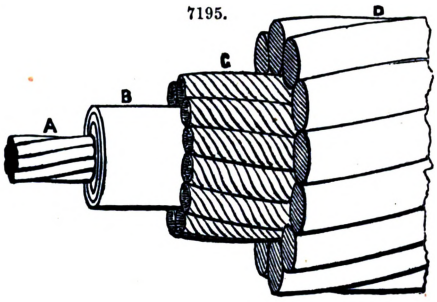

A solid wire would be preferable electrically to a strand, for the same reason that copper of small electrical resistance is preferable to copper of high resistance, the object being in all cases to obtain the greatest conducting power within a given circumference. The interstices in the strand diminish the conducting power for a given size, and the gutta-percha sheath must be of proportionately larger diameter to give the same speed of transmission and the same insulation as when a solid core of equal weight is used. When large conductors are required, however, a solid wire is not found flexible enough; and, moreover, a single copper wire is found liable to break inside the gutta-percha, without any external symptom of injury being seen; for these reasons a strand is almost universally adopted for large cores.

In the cables first made, the interstices between the wires of the strand were left vacant; but it was found that under continued pressure the water invariably penetrated into these vacant spaces and percolated along them. This was thought dangerous for various reasons, and therefore the Gutta-Percha Company now lay up their strand in an insulating compound called Chatterton's compound, consisting of gutta-percha and resinous substances, which so completely fills the spaces that a pressure of 600 lbs. a square inch cannot force a single drop of water 6 in. along the finished core; other makers have adopted the same plan. The cables, Figs. 7193, 7194, 7196, have this compound between the wires of the strand; while the Red Sea cable, Fig. 7197, and several earlier cables are without it.

7196.

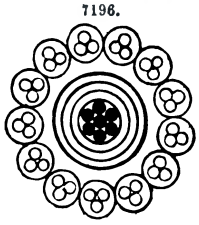

7197.

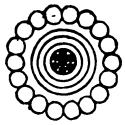

7198.

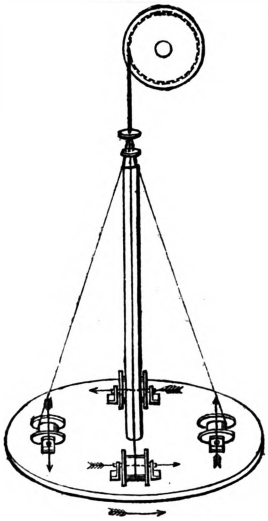

7199.

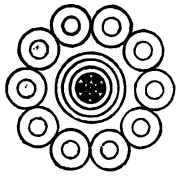

7200.

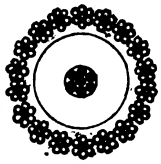

The manufacture of the copper conducting strand is extremely simple. Owing to the soft nature of the metal, it seems to be of little importance whether the wire is twisted in making the strand or not; although in the outer iron sheathing of the cable it is of special importance for the wires to be laid without twist. In the diagram, Fig. 7198, is shown a simple form of strand machine, and the twist of the wires is shown by the direction of the arrows upon the four bobbins. A friction-brake restrains the movement of each bobbin, and is adjusted by hand until the spinner feels that the tension

of each wire is equal. The drums of the bobbins are made large in proportion to their total diameter when full of wire, so that the leverage of the brake does not vary rapidly during the unwinding of the wire. It is important that every wire of the strand should be put in with a constant and equal strain, otherwise one wire will sometimes ruck up during the subsequent covering process, and knuckle through the insulating covering. Each length of wire is soldered to the next length, so that there may be no loose ends which might come through the gutta-percha. Where one piece of strand is joined to the next, a scarf-joint is made, lapped round with binding wire and neatly soldered.

In covering the strand the gutta-percha is applied in a plastic state, in successive coatings over the strand, which is for this purpose drawn through a series of dies, each one in succession larger than the preceding. Between the several layers of gutta-percha a coating of Chatterton's compound is laid on in the Malta and Alexandria and other cables, as indicated by the strong black lines in Figs. 7193, 7194, 7196, 7199; but the Atlantic cable, Fig. 7200, and the other cables shown in Figs. 7201 to 7204, are represented with a solid covering of gutta-percha because no Chatterton's compound was here used between the several layers of gutta-percha. The Red Sea cable, Fig. 7197, and several earlier cables had the compound between the coats of gutta-percha, though not between the wires of the copper strand; the latest cables have both.

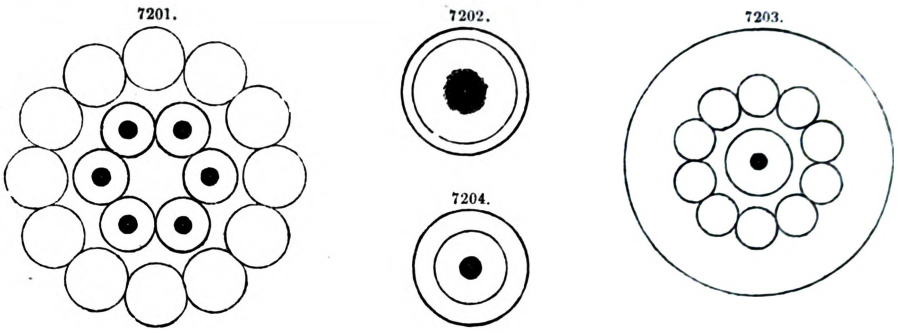

The question of the relative merits of the two materials, gutta-percha and india-rubber, for the covering of telegraph cables, is one of much practical interest. Gutta-percha sometimes contains impurities, and air-bubbles were at one time not uncommon in the covering with that material; these air-bubbles and impurities become serious faults under the action of powerful electric currents. Gutta-percha becomes plastic at about 100° Fahr., and the copper wire sometimes forces its way through the insulated sheath when the gutta-percha is accidentally softened by heat; moreover, joints unskilfully made are liable to decay in time. On the other hand, the merits of gutta-percha are very great. Not a single yard of submerged gutta-percha has ever decayed; and the importance of this fact after the experience of many years on some thousands of miles of wire can hardly be over-estimated. No gutta-percha cable has ever failed except from local imperfection or accidental injury; two causes of failure to which all known materials must be subject. The insulating properties of gutta-percha as now supplied are extremely good.

It may be remarked here that the word insulation has frequently been used in a double sense; first, as implying freedom from mechanical defect or impurity; and secondly, as implying electrical resistance. Consequently some statements that are true when the word is used in one sense have been incorrectly applied with the word in the other sense, causing some confusion in the comparisons of gutta-percha and india-rubber. Thus the circumstance that india-rubber is a better insulator in consequence of having a higher electrical resistance than gutta-percha, has in mistake been incorrectly taken to mean that india-rubber is the better material for covering telegraph cables; whereas the words better insulator imply properly in this case a superiority in the one respect of non-conducting power alone, and not a general superiority in all respects.

The defects of india-rubber differ with different makers; some kinds are liable to turn into a treacly substance on the outer surface and next to the copper; others are liable to little cracks or fissures, which appear only after the cable has been manufactured for some time; and other kinds turn slimy in water, arising it is said from a considerable absorption of water. The cause of these defects does not seem well understood, and various reasons have been assigned by different makers; such as injury of the india-rubber from heat applied to make the joint, or injury from the strain put on the india-rubber strips as they are wound on; defective structure arising in the preliminary mastication of the material in its preparation; or some injurious effect of the contact with the copper. One defect is common to all forms of india-rubber covering, namely, the necessary difficulty of making the continuous joint which is required along the whole wire; and another defect common to all forms of non-vulcanized india-rubber is the liability to injury from grease or oil. The latter danger is of the most insidious kind, for the injury is not immediately apparent, but requires a long time for its full development.

The merits of india-rubber, however, are not to be passed over lightly, and if they do not justify its general adoption as yet, they certainly entitle it to all the attention it has received for the manufacture of telegraph cables. When properly prepared it is an excellent insulator in the limited electrical sense of the word; whether better or worse than the present gutta-percha does not much matter, as has been shown above. It maintains its insulation better at high temperatures than gutta-percha, and will bear a higher temperature without permanent injury; it has also been thought by some less liable to mechanical injury than gutta-percha. But by far the most important point claimed in its favour is that a greater number of words a minute can be transmitted through a wire covered with india-rubber than through the same wire covered with the same quantity of gutta-

percha of the usual quality. There is reason to believe that in this respect india-rubber is twice as good as any gutta-percha hitherto practically supplied for cables; but a few specimens of gutta-percha have certainly been manufactured which even in this respect are on a par with the best makes of india-rubber.

The serving with hemp or jute yarns C, Fig. 7195, as practised at present, is done by machines similar to those strand machines which put a twist into the wire or yarn; and advantage is taken of the flexibility of the yarn to place the bobbins in any convenient position. A large number of yarns are used, put on with a long twist or pitch, in order to avoid any chance of bending or twisting the core if one yarn breaks or is not so taut as the others. The serving merits more attention, in the opinion of F. Jenkin, than it has received, and he considers that many machines for manufacturing telegraph cables still put too much strain upon the core, especially when it is small and weak; and that the hemp might be applied so as to protect and strengthen the core much more effectually than is now the case, and thus form a much better preparation than is now afforded for the final process of sheathing with iron wires. The usual cores, both before and after they are served with the yarn, are very weak and liable to be stretched if any hitch occurs in the feed of the machines; and it is believed that several mishaps might be traced to this cause, and that the construction of a thoroughly good serving machine is a desideratum of much importance. The yarn protected by wires remains sound under water for a long time.

The final process of sheathing the cable with iron wire D, Fig. 7195, is similar to that of making wire rope; and the machines used for the one purpose answer for the other, with the simple addition of a guide for the central soft served core. All the machines used lay the wire without twisting it, the same as in the manufacture of wire ropes.

Instead of one gutta-percha covered core, several separately insulated wires are frequently included in one sheath, as shown in Fig. 7201, which represents a cable of this class laid in 1854 between Spezzia and Corsica. This cable and all the subsequent ones are shown full size in the engravings. This cable has six insulated conductors, which are all now in working order; and the cable has not cost anything for repairs since first laid, and is still in constant work. The several insulated wires in this and similar cables are coated with gutta-percha, and then laid up with hemp worming into a strand by laying machines similar in general arrangement to those for sheathing. The gutta-percha covered wire is of course not twisted, but the hemp generally is. The cables across the English Channel are generally of this class.

In the Atlantic telegraph cable, shown in Fig. 7200, laid in 1857, the simple iron wires of the sheath were replaced by small strands, made each of seven wires of 0·028 in. diameter; but these were found objectionable on account of their rapid corrosion.

Strands formed of thick wire are, however, frequently used to cover heavy shore-ends of telegraph cables, and are almost necessary in the largest cables for giving sufficient flexibility. Figs. 7205, 7206, represent the Holland cable, the shore end of which, Fig. 7206, weighs 19·6 tons a nautical mile; the external protecting wire is here 0·220 in. diameter in the strands covering the shore end, while the single wires covering the main cable are 0·375 in. diameter, Fig. 7205; but in the process of manufacture the cable was wound round a 7-ft. drum without difficulty.

7205.

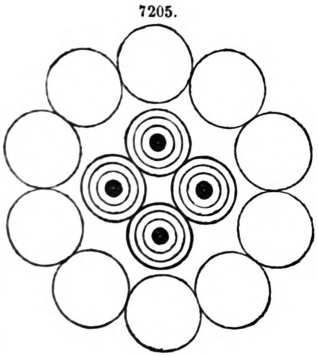

7206.

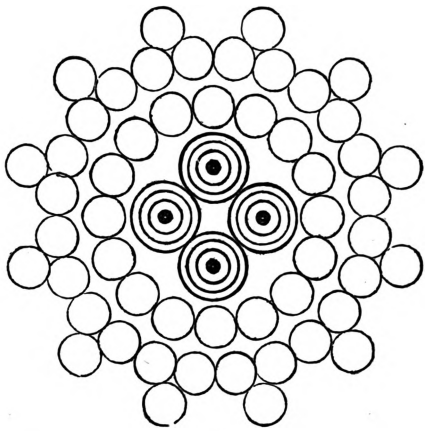

In the Toulon and Algiers cable, Fig. 7199, laid in 1860, the iron wires of the sheath were replaced by steel wires, 0·085 in. diameter, each covered by a tarred hempen strand. This form, though convenient in many ways, has been abandoned, because the marine insects eat away the hemp with great rapidity, leaving a mere bundle of loose wires. Simple hempen coverings have also been proposed, and in a few instances unsuccessfully tried.

A single copper wire, however, 0·065 in. diameter, merely covered with gutta-percha, Fig. 7202, was laid successfully between Varna and Balaclava in 1855, during the Crimean war, a distance of 300 miles, and worked for about nine months.

In a construction of telegraph cable proposed by Allan, no outer covering of wires is used, but the gutta-percha covered wire is strengthened by a layer of small steel wires round the copper conductor, as shown in Fig. 7207. It is doubtful whether this plan is preferable to a simple copper strand covered with gutta-percha; though superior mechanically, it is far inferior electrically.

The rapid corrosion of the outer wires in some situations when submerged is perhaps the chief defect of the common type of submarine cable. To prevent this corrosion, the Isle of Man cable,

shown in Fig. 7203, and the Wexford cable, had a bituminous compound applied over the iron wires on Latimer Clark's plan. The Isle of Man cable was passed through the hot melted compound, and was considered to have been injured in some places by having been accidentally delayed in its passage through the hot material. The Wexford cable was not passed through the melted mass, but had the compound thrown over it or basted on, and by this simple contrivance a very serious danger was avoided. This plan of preventing the decay of the iron wires is fast coming into favour.

7207.

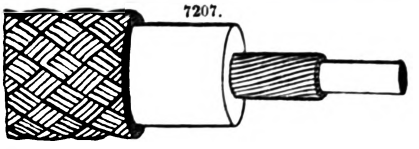

As a protection against rust it has also been proposed to cover each of the outer wires separately with gutta-percha. A cable of this make, shown in Fig. 7196, with strands composed of three iron wires instead of single wires in the sheath, was suggested by Chatterton for the new Atlantic line, and except on the score of cost seems well adapted for the purpose. It has also been proposed to protect the iron wires by vulcanite, applied either as a general coating or to each weir separately.

In a plan introduced by Siemens, instead of protecting the iron wires they are omitted altogether, and another material considered more durable is substituted. This construction of cable is shown in Figs. 7208 to 7210. The core is surrounded with two layers of hempen strands C, C, Fig. 7208, laid on under considerable tension. Three or more strips of copper or brass G, G, about 0·01 in. thick, are then bound round these strands while they are still stretched by the tension; and this copper or brass sheathing grips the hempen cords tightly, so that they cannot contract longitudinally after leaving the machine. By this construction a cable is obtained which is extremely light and strong; thus a cable $\frac{3}{8}$ in. diameter bears a strain of 15 cwt. before breaking, and stretches only 0·8 per cent. of its length under a load of half the breaking strain.

7208.

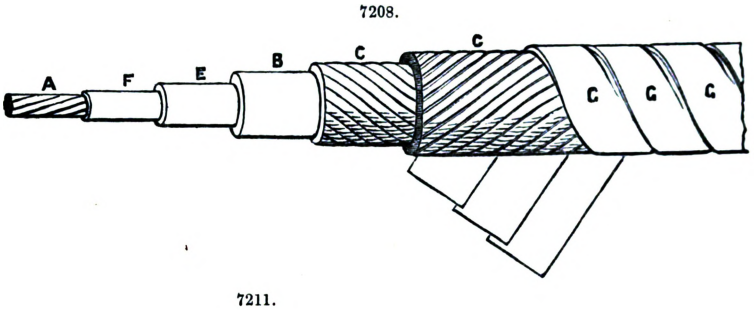

7209.

7210.

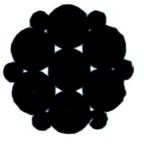

7211.

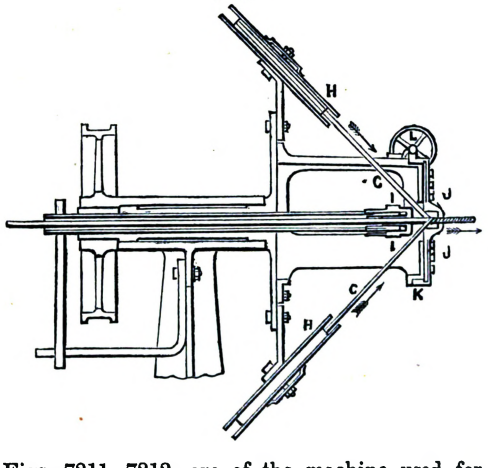

7212.

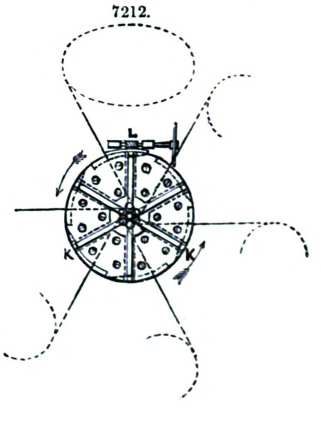

Figs. 7211, 7212, are of the machine used for sheathing the cable with the metal strips. Two serving machines are placed one behind the other, and are driven in opposite directions, laying on two distinct hemp coverings. The number of bobbins or the size of the strand in the two machines is so adjusted that each covering, although of different diameter, may have the same lay or pitch of the spiral. Each hemp strand passes round a V pulley between the bobbin and the laying plate, and an adjustable brake is applied to each of these pulleys to strain or stretch the strands. A cable of $\frac{3}{8}$ in. finished diameter has two layers of 16 hempen strands each, and each strand is laid on under a strain of 8 lbs. In front of the two serving machines, and driven by a separate band, stands the sheathing machine, Fig. 7211. The copper or brass strips G, G, are wound on bobbins H, as in the usual serving machines; and are drawn off from the bobbins to certain guides of peculiar form close to the served core. These guides lead the several strips so that each strip laps over the preceding one by about one-third of its breadth. The core is supported and compressed by the tightening nozzle I I up to the very spot at which the metal strips are laid on. The nozzle I is made up of segments contracted by an adjusting screwed nut, a transverse section of which is shown one quarter full size in Fig. 7213. The strips laid on

lapping over one another would form a cone instead of a cylinder, if it were not for a series of rollers J, J, between which the metal-sheathed cable is immediately passed. These rollers forcibly compress the metal sheathing into a cylindrical shape; and a simple adjustment regulates the pressure exerted by all the rollers, as shown in the end elevation, Fig. 7212, by means of circular inclined surfaces K pressing upon the ends of the slides that carry the rollers, which are all adjusted simultaneously by the hand-wheel L. The result of the manufacture is certainly a cable very beautiful in appearance; its practical value can only be decided by experience.

7213.

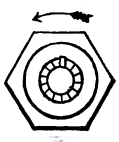

The copper or brass sheathing affords lateral protection to the core; the longitudinal strength of the cable is amply sufficient both for the necessary strain during submergence, and to provide against accidental injury; and insects will not lodge in the hemp so long as the metal sheathing remains intact. There may be some ground for apprehension as to the durability of the light copper or brass sheathing; but this must necessarily be left to be decided by further experience on a large scale.

In reference to the defects of the usual iron-wire sheathing as shown in the drawings, it may be observed that some misconceptions have existed upon the subject. It seems to be generally supposed that wires laid on spirally round a soft core must, as soon as any strain comes upon them, stretch somewhat in the way that a spiral spring does; and many attempts have been made to obviate this supposed defect; but on actual trial no defect is observed. The single open helix of a spring stretches by diminishing the diameter of the coil; but when a number of wires are laid up touching one another, so as to form a solid ring or cylinder round a centre, as in a telegraph cable, the diameter of the ring cannot diminish, even though the centre of the cable is soft; and consequently the only stretching that occurs is due to the elongation of the iron itself, added to a very small constant, due to the more perfect closing of the wires one against another. The following experiment on the stretching of telegraph cables is taken at random from a very large number made by the Board of Trade Committee on submarine telegraph cables, all confirmatory of this view. The total section of iron in the Red Sea cable which was experimented upon, shown in Fig. 7197, is about $\frac{1}{10}$ sq. in.; and one sample 100 in. long elongated 0·56 per cent. with 75 cwt. strain; and it broke with 77½ cwt., or about 39 tons a square inch strain upon the iron wire. Other samples of the same cable elongated about 1 per cent. with 85 cwt. Then single iron wires of about the same size as those in the cable, 0·085 in. diameter, were found to stretch from 0·46 to 0·72 per cent. before breaking, and bore about 4·4 cwt. each, or 39 tons a square inch. It appears therefore from experiment that there is hardly any difference in elongation between a solid rod and a well laid-up cable; and in strength no difference whatever between the cable and the wire composing it. The core does not, as at present made, add sensibly to the strength of the cable; for its resistance to the extension of say 1 per cent., at which the cable breaks, is insensible compared with that of the iron-wire sheathing.

The twist put into a cable by the usual mode of coiling it when laid in a mass, as in the hold of a vessel, has also sometimes been misunderstood; a twist is no doubt put into the cable by the process of coiling, but this twist is as certainly taken out again when the cable is uncoiled, and is therefore of no importance.

The only inconvenience attending the spiral lay of the cable sheathing is first apparent when the cable is being paid out, without sufficient strain upon it to lay it taut along the bottom. Then as the slack accumulates the cable becomes virtually free at the bottom, while the parts near the surface of the sea have considerable weight to bear; and the cable therefore untwists and throws itself over into a bight. The number of turns taken out of the cable, and of bights put into it along the bottom, depends simply on the amount of slack paid out. When the cable is again picked up, these bights draw tight into kinks, to the injury of the recovered cable; and this is the only practical inconvenience attending the usual spun cables. The amount of elongation consequent on the untwisting is quite insignificant; and, except for these kinks, a telegraph cable recovered after three years from 1500 fathoms depth has been found just as good as when it was laid out.

The common iron-covered cable can be easily laid safely in depths not exceeding 1000 fathoms; but beyond that depth steel wire should be used for the sheathing, or the specific gravity of the cable diminished. Exposed hemp is not admissible, owing to the marine insects already mentioned, which are found at all depths.

The manner of laying a telegraph cable and the machinery requisite for carrying out the operation, are matters of the first moment to the telegraph engineer. The experience gained in laying the Atlantic cables, and especially the failures that attended the first attempts, have led almost to perfection in the machinery for paying out, as well as to the invention and successful application of other machinery for recovering a cable after it has been laid. The following succinct and clear description of such machinery is given by George Elliot in a paper read before the Institution of Mechanical Engineers.

The Atlantic Telegraph Cable Expedition of 1866 was twofold in its purpose, the first object being to lay a new cable, and the second to recover and complete the one commenced and lost in the unsuccessful attempt of the previous year.

The cable itself was coiled in three circular wrought-iron tanks, which were built on the main deck of the ship, as shown in Figs. 7214 to 7216, which represent a general plan and longitudinal and transverse sections of the vessel. The foremost tank A occupied the space which had previously been the forecargo space; and the after tank C was placed in what had been the aftercargo space. The middle tank B occupied what had been the second dining saloon; and the funnel (shown by the dotted lines in Fig. 7215) from the pair of boilers in that position was removed for the purpose, those boilers being thrown out of work during the expedition. The whole of the fittings in these spaces had been removed, and each of the tanks was stayed to the sides of the ship by two flat frames of iron, built on angle-iron framing, thus securing the tanks in the most sub-

stantial manner. The deck had also been shored underneath by balk timbers, which were carried through from deck to deck down to the bottom of the ship.

7214.

Plan of Great Eastern containing Cable and Machinery.

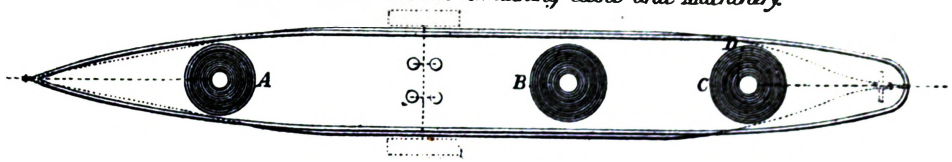

Longitudinal Section

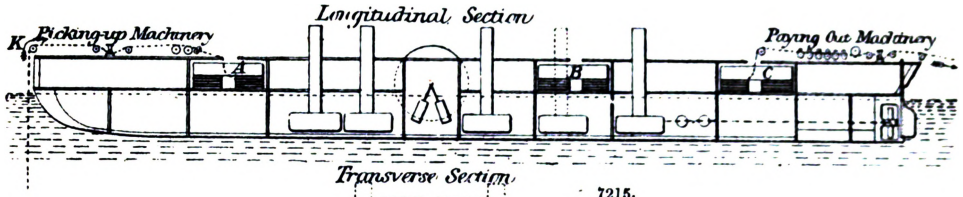

Transverse Section

7215.

7216.

The fore tank was 51 ft. 6 in. diameter, the middle tank 58 ft. 6 in., and the after tank 58 ft.; they were all of a uniform depth of 20 ft. 6 in., and similarly constructed in all respects. The bottoms were $\frac{1}{2}$ in. thick, lap-jointed; and the sides were $\frac{5}{8}$ in. thick in the lower half, and $\frac{1}{2}$ in. in the upper half. The sides were butt-jointed, so as to present a perfectly smooth surface inside; and the bottoms were covered with a thin wood floor to receive the cable. As it was of vital importance that the cable should be kept always under water, to prevent depreciation of the gutta-percha coating, and also to afford the only means of effectually testing its electrical condition, these tanks were carefully made water-tight. In paying out the cable, the water in the tanks was kept somewhat below the level of the top flake, and required to be lowered during the paying out; for this purpose each tank was supplied with discharge-valves, and as the bottoms of the coils were above the water line of the ship, Fig. 7215, it was only necessary to open these valves in order to allow the tanks to discharge themselves completely.

The coiling of the cable into the tanks, out of the hulks by which it was brought from the Telegraph Construction and Maintenance Works at Greenwich to the Great Eastern at Sheerness, was effected in the following manner. The cable was brought up over the side of the ship from the hulk, upon wheels which guided it on to a large deep-grooved wheel driven by steam power; on the tread of this wheel ran a small jockey-wheel or roller, pressing the cable down into the groove of the large wheel, so as to give sufficient friction for enabling the wheel to draw up the cable from the hulk. The coiling commenced from the outside of the tank, the end being previously triced up above the tank, leaving a clear end for splicing and testing. The first turn of the cable was carefully laid round the outside of the tank, and the next was laid back close up against the previous turn, and so on until a perfectly flat flake or layer was laid into the eye of the coil, which was left about 9 ft. 6 in. diameter. The cable was then led out direct to the outside of the tank, across the coils already laid; and another flake was commenced precisely similar to the first, this process being continued until the tank was filled. The direction of lay-out of the cable from the end of one flake to the beginning of the next was tangential to the circle of the eye of the coil, as shown at D in the plan, Fig. 7214; and the portion of cable crossing the coils was protected from the weight of the coils above by wood battens laid on each side of it, about 3 in. wide and 1 in. thick, with the edges rounded. When the coiling down of the cable into the tanks was finished, eyes were fitted into the centre of each coil, which were telescopic in their construction, so that as the cable was paid out the eyes could be lowered from time to time. Men were stationed in the tanks for the purpose of keeping the cable always clear during the paying out.

7217.

General arrangement of Paying-Out Machinery at stern of "Great Eastern"

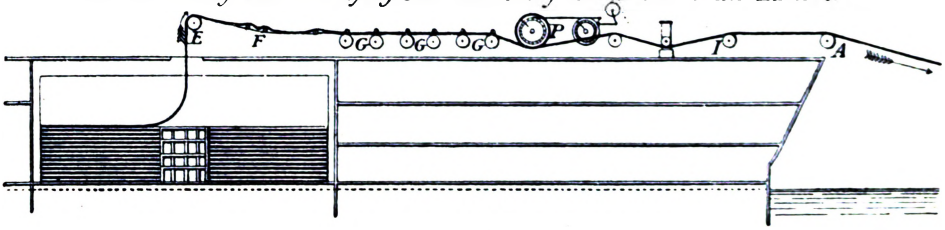

In paying out the cable it was passed up to the hatch over the centre of the coil, and carried over a large wheel E about 4 ft. diameter, as shown in the enlarged longitudinal section, Fig. 7217.

The cable was then carried in a trough F about 2 ft. wide, made of sheet iron, leading to the paying-out machinery; this trough was fitted with rollers at about 10 or 12 ft. intervals to relieve the cable from friction in passing along, until it reached the paying-out machinery, which was placed in the stern of the ship, slightly to the port side.

The length of cable in the after tank was 840 knots (1 knot = 6084 feet = 1·15 statute mile), in the middle tank 865 knots, and in the fore tank 671 knots; and the entire length of 2376 knots was joined up into one continuous length of cable before the laying was commenced. The size of the cable was 1¼ in. diameter, and its weight 31 cwt. a knot in air, and 14¾ cwt. a knot when immersed in water; the breaking strain was 8·10 tons, equal to eleven times its weight in water a knot, so that the cable would just bear its own weight in 11 knots depth of water.

Paying-out Machinery.—In the paying-out machinery the chief object to be attained was to supply some means of checking the cable in the most regular manner possible while passing out of the ship, and also of keeping it in a state of constant tension; and it was required that the amount of this tension should be at all times known, and that it should be regulated by the depth of the water in each particular part of the ocean, and also to some extent by the speed of the ship.

The most important feature is the arrangement by which it was rendered impossible that more than a certain strain should be kept upon the cable during the paying out. A less strain would only involve a slight loss of cable; but any increased strain might possibly damage or even destroy it. The cable on entering the paying-out machinery was passed over a series of six deep-grooved wheels, each about 3 ft. diameter, one of which is shown in side and end elevation at G in Figs. 7218, 7219. On the shaft of each wheel G was fixed a friction-wheel H of the same diameter,

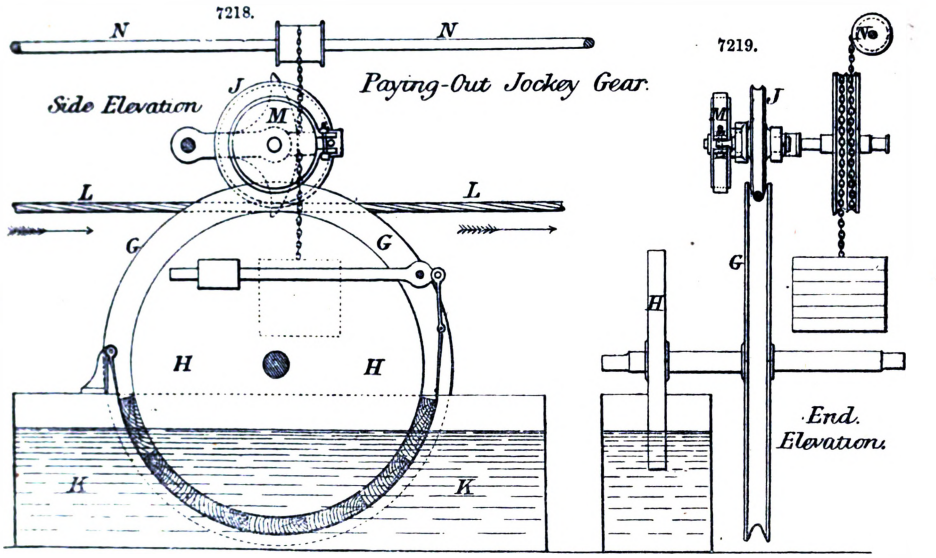

to which was fitted a friction-strap lined with wood and tightened by a weight on a lever; to prevent any unnecessary wear, this friction-wheel ran in a tank of water K. Above each of the grooved carrying wheels was a jockey-wheel J about 14 in. diameter, pressing the cable L down into the groove of the carrying wheel G, and hooped with an india-rubber tire to form a soft cushion, so that no damage might be done to the cable. The jockey-wheel was also fitted with a small friction-wheel M having a wrought-iron strap adjustable by a screw. Any one of the jockey-wheels could be lifted up, so as to allow the cable to slip freely through the groove in the carrying wheel; or in case of necessity the whole set of jockey-wheels could be raised at once by a large hand-wheel, like an ordinary ship's steering-wheel, turning the longitudinal shaft N, which lifted up each jockey-wheel by a chain winding upon the shaft. In practice there were generally about four of these wheels kept at work, but the machine was made with six in case of need.

After the cable had passed through this part of the machinery, called for distinction the jockey-gear, and had thereby been subjected to a slight amount of strain, it was led to the main paying-out drum P, shown in side elevation in Fig. 7220, and in end elevation in Fig. 7221. The cable L entered on the under side of the drum, Fig. 7220, and was passed four times round, as a rope is passed round a capstan, and for the same purpose of getting a firm hold upon it. Just above the point at which the cable was led on, a knife-guide Q was placed for fleeting or slipping sideways the coils already on the drum, so as to leave a clear lead-on for the fresh cable; this guide was adjustable in both directions with screws, like a slide-rest on a lathe. The shaft S of the drum was carried through on each side, one end being fitted with a coupling R, which will be referred to afterwards in connection with the picking-up arrangements adapted to this machine; and on the other end were fitted the main friction-brakes T, T.

These self-adjusting friction-brakes were invented by Appold, and it is interesting to note that they were the identical brakes used in the first attempt to lay the Atlantic cable in 1857. The brake-wheels themselves T, T, Figs. 7220, 7221, of which there were two on the shaft, were 4 ft. 6 in. diameter, and 12 in. wide on the tread, which was turned a little convex. On each

wheel was fitted a wrought-iron strap, lined with wood, and a screw adjustment U admitted of any required amount of friction being obtained. On the top of each brake-strap was a lug, to

7220.

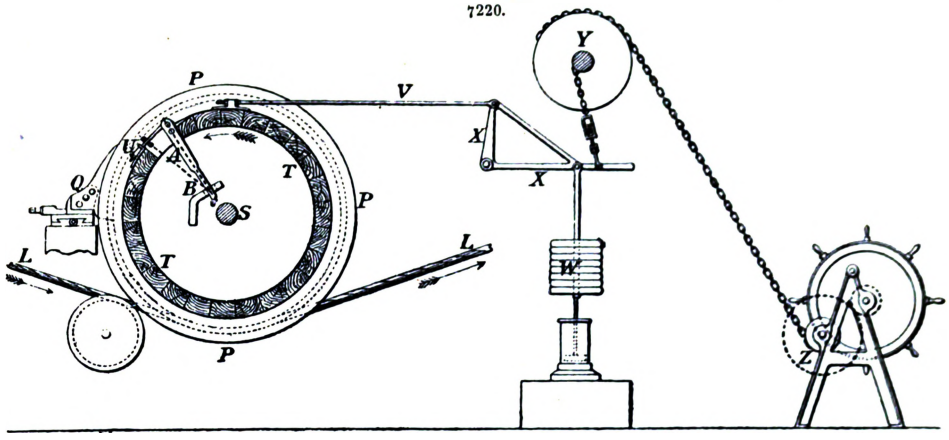

which a long rod V was fastened, leading to the top of a bell-crank lever X with arms in the proportion of 1½ to 1; and to the long arm of this lever was suspended a rod carrying a number of weights W, which were removable at pleasure for adjusting the strain. The rod was continued below the weights, and had a piston attached to it working loosely in a water-cylinder, to prevent any sudden jerking action from coming on the brake. By screwing up the adjustment U, the brake was made to have sufficient friction for lifting the weights on the suspension-rod.

7221.

End Elevation of Paying Out Drum & Friction Breaks.

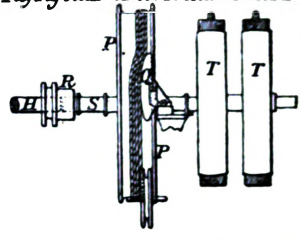

In order to render the brake self-adjusting, so that it should relieve itself whenever binding too hard, the brake-strap was cut through, and the ends were attached to a lever A in the manner shown in Fig. 7220, the lower extremity of the lever being free to move in a slot cut in the stationary bracket B. When the brake was binding too hard, so that it began to lift the weight W too high, the brake-strap consequently travelled round and brought the lever A into the position shown dotted. The attachment of the one end of the brake-strap at the extremity of the lever moved then through an arc of a larger radius than the attachment of the other end of the strap; and the result was therefore equivalent to lengthening the brake-strap and slackening the brake off the surface of the wheel, causing the weight W to fall back instantly to its original position. The consequence of this action was that when the brake was at work the lever A kept the strap just tight, and the weight W continued just oscillating. The two brake-wheels T, T, placed side by side on the drum-shaft, Fig. 7221, were both fitted alike throughout.

Near the end of the bell-crank lever X, Fig. 7220, a chain was attached leading to a wheel Y overhead; and from a larger wheel on the same shaft another chain led to a barrel on a winch Z. A man standing at this winch by turning the hand-wheel could immediately take all the weight off the brakes T, T. The whole of this paying-out machine was made double, so that in case of any mishap there might be no delay, but the cable might at once be removed from one drum to the other. This provision, however, fortunately proved to be needless, as throughout the expedition there was no failure in any part of the machinery, its action having been in every particular perfect.

The cable having by these means been sufficiently checked was passed over the stern wheel A, Fig. 7217, into the sea; and on its way the actual strain was measured by a dynamometer placed at D, consisting of the following arrangement. Immediately on the cable leaving the paying-out drum P it passed over a wheel H, and at a distance of 23 ft. 6 in. over another similar wheel I; and in the centre between these two wheels the dynamometer D was fixed, which is shown in Figs. 7222, 7223. It consisted of a wheel D, weighted to a particular amount, and riding upon the cable L, being guided in a fixed vertical frame by rollers A, A. The amount of deflection evidently varies according to the strain on the cable, and the strain was calculated from the formula obtained by the ordinary resolution of forces, namely, $S = \frac{l}{4d} W$ approximately; where S = strain, and W = weight of dynamometer wheel D, both in the same terms; l = distance between centres of carrying wheels H and I, Fig. 7217; and d = deflection of cable. The values of d or amounts of deflection were calculated for all strains from 7 cwt. up to 40 cwt., and a scale B was affixed to the instrument with an index C carried upon the wheel D; so that the strain could immediately be read off at all times by simple inspection. The total weight of the wheel D and its suspended weight F was 426 lbs., and the rod carrying the weight F was continued down to a piston G working freely in a cylinder of water, to prevent any sudden jerks of the dynamometer. The ordinary strain in paying out was found to vary from 10 to 12 or 14 cwt., and at no time exceeded 16 cwt.

The paying-out drum was also supplied with steam power for reversing its action and picking up the cable, should any fault occur requiring such an operation. This constituted one of the most important improvements over the arrangements of the 1865 expedition, in which it had been

necessary to hand the cable along the side of the ship from the paying-out machinery in the stern to the picking-up machinery in the bow, on any occasion of requiring to haul in the cable; and it was during this hazardous process that the cable was broken and lost. In the present machinery the shaft S of the paying-out drum P, Fig. 7217, was prolonged on one side for the purpose of forming a coupling to the picking-up arrangement. It was considered advisable to make all this part of the machinery sufficiently strong to work with, and if necessary even to break the large grapnel-rope, which had a breaking strain of more than 30 tons. The shaft S was therefore made in its smallest place 7½ in. diameter. There were three points to be specially considered in the design; first, that the moving parts of the machine should be kept as light as possible so that the momentum of the moving mass in paying out should be as small as possible, and should therefore strain the cable as little as possible, either in case of any sudden and accidental mishap, or when the ship was pitching; and this was of vital importance. Second, that the picking-up arrangement should be capable of being brought into action at a moment's notice. And third, that the strength of the machine should be sufficient to cope with a rope having the uncommon breaking strain of 30 tons. These various requirements were admirably met by the arrangements adopted in accordance with the designs of Clifford, the engineer of the Telegraph Construction and Maintenance Works, who had also worked out the design of all the machinery employed in the expedition.

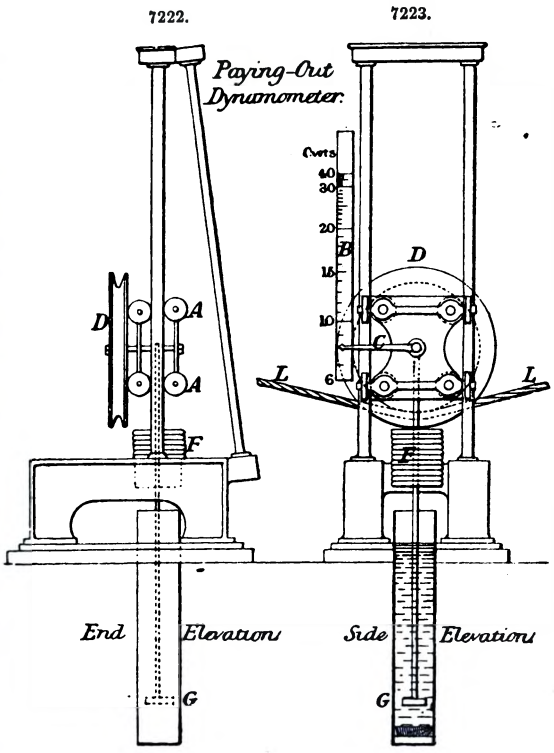

In order that the machinery for paying out might be as light as possible, the picking-up motion was coupled direct to the shaft S of the drum itself, as in Fig. 7221; so that when the coupling was thrown out, the paying-out machine remained intact and as similar as possible to what would otherwise have been necessary if there had been no picking-up arrangement. This shaft and coupling had to be of the great strength necessary to bear a torsional strain of 30 tons, acting at a leverage of 2 ft. 8 in. The shaft ends were squared, and a large wrought-iron coupling R capable of sliding along coupled the two shafts securely; and the application of this was the work of a moment. On the shaft H thus coupled to the drum-shaft was fixed a large spur-wheel of 7 ft. 11½ in. diameter and 5 in. pitch: this pitch may at first appear excessive, but it is less than is in use for such exceptional strains. A train of gearing driving the pinion working into this wheel admitted of a ready alteration in speed and power, and was driven by a pair of trunk engines made by Penn, having a nominal horse-power of 80, but working in this case considerably below that power, as the condensing part of the engine was dispensed with, and the steam supplied by the ship's boilers was only 20 lbs. pressure. The whole of the spur-gear was supplied by Jackson of Manchester, and was manufactured by their wheel-moulding machinery, which secured a remarkably true bearing surface on the teeth. The steam was conveyed to the engines by an 8-in. copper pipe of about 130 ft. length; and as a considerable condensation was anticipated from such a great length of pipe, a separator and superheater were fitted close to the engines, so that they received their steam in about an ordinary condition.

In paying out the cable the portion in the after tank was first taken, in order to trim the ship, as she was considerably by the stern at starting; the fore tank was next emptied, and the middle tank left to the last, the ends of the cable from the several tanks having been spliced together originally in that order of connection. When each tank became nearly empty the ship was slowed down, and it was quite stopped for a short time whilst the paying out of the cable was transferred from one tank to another. This apparently rather delicate operation was effected on both occasions without difficulty. The whole of the cable in the three tanks was spliced up into one length before the paying out commenced; and the length between each tank was carefully laid in troughs of wet saw-dust, so that it could be kept under electrical test; it was also from time to time thoroughly soaked with water. The total length of cable paid out was 1851 knots, and the time from shore was fourteen days, giving an average of 132 knots a day paid out, and an average rate of 5½ knots an hour for the cable. The total distance run was 1669 knots, making the average proportion of slack paid out 11 per cent.

During the whole time of the paying out, the machinery was most carefully watched at all points. The drums were fitted with rotometers, showing the amount of cable which had been paid out; and this amount was carefully noted every fifteen minutes in the ship's log, and the speed of paying out and the speed of the ship were calculated so that a right amount of slack might be allowed. If the ship were travelling too fast, the speed was immediately reduced in the engine-room; and if too much cable was being paid away, a small addition to the weights on the drum

brakes usually remedied this defect speedily. Varying winds and currents and many other circumstances caused constant watching from moment to moment to be increasingly necessary.

Picking-up Machinery.—The cable of 1865 had been laid with about 15 per cent. of slack, and this percentage of slack was the great source of hope for the successful recovery of the cable. It was calculated that if the cable could be raised to the surface, without hooking it at more than a single point, there would be a bight suspended in the water of 9¼ knots in length, when in 2 knots depth of water, as in the diagram, Fig. 7224; and the horizontal distance J J would be 8 knots

7224.

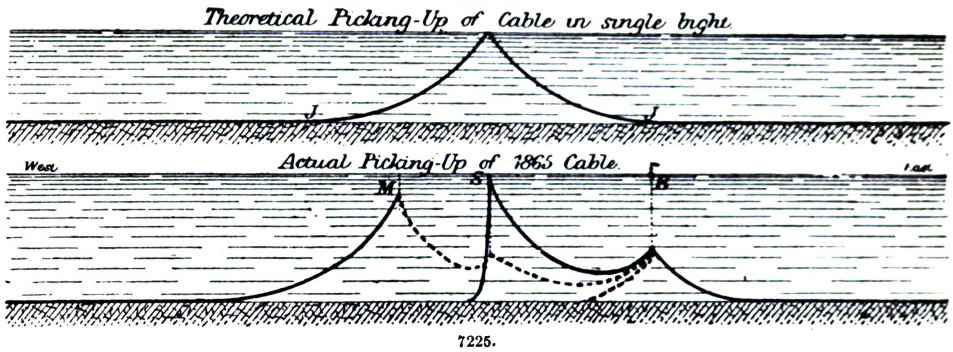

7225.

between the portions resting upon the ground, giving an excess of length of 15 per cent. in the suspended bight; and the results of the actual picking up proved this calculation to represent very closely the curve of the suspended cable. The size of the cable was 1⅛ in. diameter, and its weight 35¾ cwt. a knot in air, and 14 cwt. a knot when immersed in water; the total weight of a suspended length of 9¼ knots in water was therefore 6½ tons, but as the breaking strength of the cable was 7¾ tons, it would carry the weight of 11 knots of its own length in water before breaking. As, however, the possibility of its recovery in this manner in a single bight was generally considered to be out of the question, it was intended therefore to attempt raising it by degrees only. Three steamships were accordingly fitted with picking-up apparatus, the Medway, Great Eastern, and Albany, for the purpose of grappling for the cable simultaneously in three places; the Medway to grapple to the east and the Albany to the west of the Great Eastern.

The picking-up machine was very powerful, as it had to cope with a rope of 30 tons breaking strain, and if necessary to break it. It is shown in elevation and plan in Figs. 7226, 7227. The

7226.

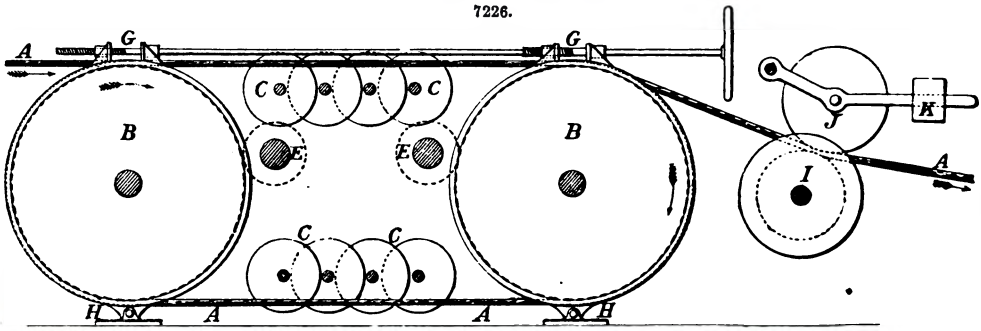

7227.

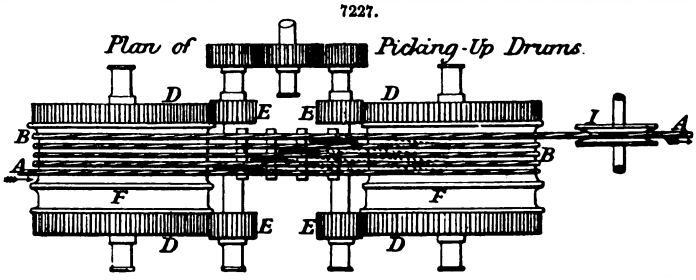

two large drums B, B, each 5 ft. 8 in. diameter, were fixed on shafts parallel to each other at 11 ft. distance apart from centre to centre. The grapnel-rope A A was passed four times round these two in the manner shown in Fig. 7227, passing away on the opposite side from where it entered on. The fleeting of the rope was effected by small disc rollers C, C, placed on shafts between the drums, four above and four below; and each part of the rope was fleeted after leaving one drum before it entered on the other, thus keeping every portion of the rope clear of the rest. The fleeting required much

more care in this machine than in the one for paying out, as the shackles and swivels on the grapnel-rope would capsize on and hold down the preceding coil of the rope on the drum, unless the four coils were all kept very wide apart.

As the strains to which it was expected the machine might probably be put were very great, it was thought advisable not to take the power through the shafts of the drums B, B; and accordingly the drums had spur-wheels D, D, fixed at each side, into which the pinions E, E, geared; and by this means no torsional strain whatever was put on the shafts of the drums. The strain of the grapnel-rope was divided thus between four spur-wheels, and the pitch of these was only 4 in.; although in the paying-out machine, where this division of strain could not be effected, the spur-wheels were 5 in. pitch. Each of the drums had a brake F fixed to it, and both the brakes were worked by one shaft G G, with two screws on it, carried fore and aft along the machine over the brakes. All the strain of the brakes was carried by brackets H, H, on the sole-plate, and in no way by the screw-shaft G; and this is believed to be rather a novel application of the brake-strap, and may be worthy of remark.

The grapnel, Fig. 7228, was simply a very large ordinary boat grapnel, made with five prongs instead of three; it stood about 4 ft. high, was fitted with a swivel at the top, weighed about 2¼ cwt., and its prongs would carry a strain of about 8 or 9 tons without damage. Shackled to this was a 15-fathoms length of 1⅛-in. chain, to which was fastened the grapnel-rope. This rope was a most remarkable one, being 1¼ in. diameter, and consisting of seven strands, six strands round one; each strand again consisted of six smaller strands of hemp, in the centre of each of which was a wire about $\frac{1}{10}$ in. diameter. The rope was repeatedly tested, and was never known to break with less than 30 tons strain. Its weight in air was about 5 tons a knot, and in water 3¼ tons.

7228.

Grapnel.

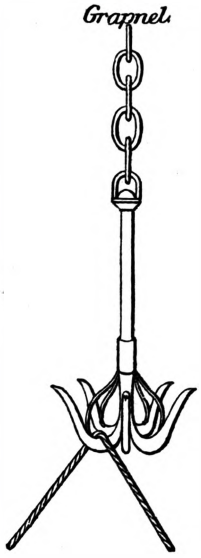

At the bow of the ship were fitted four iron girders carrying three cast-iron sheaves about 3 ft. 9 in. diameter; these sheaves were all clear of the ship, and over the centre one the grapnel-rope was led on board, as shown at K, in Fig. 7215. The grapnel-rope was led directly to the picking-up machine from the bow sheave, passing through a dynamometer, so that the strain could be ascertained at all times. This dynamometer was similar to the one for the paying-out machinery described before, except that it was of a much heavier construction and loaded with a weight of 2142 lbs. The vertical travel of the dynamometer wheel was 5 ft., the horizontal length of deflected cable 30 ft., and the graduations of the scale ranged from 2 tons to 20 tons.

The machine was driven by a pair of trunk engines, precisely duplicates of the pair employed in the paying-out machine; and these engines, together with the picking-up machine itself, were made by Penn. There was also a system of gearing similar to that belonging to the paying-out machine, for admitting of a change of speed and power; the slowest speed, when the engines made 80 revolutions a minute, was about ¾ knot an hour, and the quickest about 1½ knot an hour. The machine was supplied with a draw-off wheel I and jockey-wheel J, having an adjustable weight K, so as to keep the grapnel-rope A well taut on the drums B; and a rotometer was added for measuring the length of grapnel-rope over-board. When the picking up of the cable was in progress, the grapnel-rope was delivered from the picking-up drums into the fore tank, which was at that time empty.

The process of grappling was as follows. The exact line of the cable having been marked by a couple of buoys, put down by nautical observation, the ship was brought into a position about 3 or 4 knots north or south of this line, according to the direction of the wind and current, so that the ship might be drifted slowly across the line of the cable. The new cable of 1866 had been laid at a distance of about 30 knots southward of the line of the old cable, so as to avoid all risk of injury in the process of grappling for the old cable. In a depth of 1900 fathoms, nearly 2 knots, about 2200 fathoms length of grapnel-rope, with the chain and grapnel as before described, was lowered with great care, taking about an hour or an hour and a half for the purpose. Whilst the grapnel was being lowered, accurate observations were continuously taken of the indications given by the dynamometer; and the grapnel striking the bottom, was almost immediately indicated by a diminution of weight, as it and the chain weighed rather more than half a ton. About a couple of hundred fathoms of additional rope were then paid out, and the dynamometer from this time was most strictly watched; averages of the indications were taken every few minutes, and many hours frequently passed before there was the smallest change in these averages. It was interesting to observe how steadily these averages remained at about 8½ to 9½ tons, dependent upon the length of grapnel-rope out, and the strength of the wind and current. An indicated rise of 5 cwt. was generally considered satisfactory evidence that the cable was once more hooked, and this seldom proved wrong; no attempt, however, was made to haul in the rope until the strain rose 2 tons above the average. As soon as a strain of 10½ to 12 tons was observed, the ship was brought up by her engines to ease the strain, and the operation of picking up commenced; the strain then generally rose to about 14 or 15 tons, and continued at this amount until the bight of the cable was raised off the ground, after which time it gradually lessened. The attempt was once made to raise this bight direct to the surface without assistance from the other ships, and it proved successful, the cable coming a few feet above the water with a strain of about 6½ tons. There was, however, a heavy swell on at the time, and the pitching of the ship broke the cable through.

After many ineffectual attempts, the cable was at length successfully raised in the following manner. It was hooked by the Great Eastern, and the bight being raised about 900 fathoms from the bottom was buoyed there, as shown at B in Fig. 7225; the buoy attached was of the largest size, weighing 3¼ tons, and capable of supporting a weight of 13 tons. The Great Eastern then again grappled for the cable about 3 or 4 knots westward at S, and again found it; the Medway

found it at the same time at M, about 2 knots westward of the Great Eastern. The Great Eastern then commenced hauling in, signalling to the Medway to do the same, and to break it if she could not bring the bight to the surface; this she accordingly did, the cable breaking about 200 fathoms below the surface. The Great Eastern in this manner had a loose end of about 2 knots to the westward, and had immediately a much reduced strain to contend with. Ultimately the end was successfully brought on board, the electrical circuit to Valentia was once more established from the ship, and the movement of the small speck of light on the galvanometer scale by the current received from Ireland indicated the success of the undertaking.

See BATTERY. BORING AND BLASTING. CABLE. ROPE-MAKING MACHINERY.

Books on Telegraphy;—Faraday (M.), 'Experimental Researches in Electricity,' 3 vols., 1839–55. Shaffner's (T. P.) 'Telegraph Manual,' 8vo, New York, 1859. Gavarret (J.), 'Télégraphie Électrique,' 12mo, Paris, 1861. Webb (F. C.), 'Electrical Accumulation and Conduction,' part i., crown 8vo, 1862. Blavier (E. E.), 'Traité de Télégraphie Électrique,' 2 vols. 8vo, Paris, 1867. Sabine (R.), 'The Electric Telegraph,' 8vo, 1867. Clark (Latimer), 'On Electrical Measurement,' crown 8vo, 1868. Schellen, 'Der Elektromagnetische Telegraph,' 8vo, Brunswick, 1868. Ludewig (J.), 'Der Ban von Telegraphenlinien,' 8vo, Leipzig, 1870. Clark and Sabine, 'Electrical Tables and Formulæ,' crown 8vo, 1871. Meilli (Dr. F.), 'Das Telegraphen-Recht,' 8vo, Zurich, 1871. 'British Association, Report on Electrical Standards,' edited by Professor Fleeming Jenkin, 8vo, 1873. Hoskiœr (Capt. V.), 'Guide for the Electric Testing of Telegraph Cables,' crown 8vo, 1873. Culley (R. S.), 'Handbook of Practical Telegraphy,' 8vo.

TESTING MACHINE. FR., *Machine à éprouver;* GER., *Prüfungs Maschine.*

A machine for finding the amount of resistance which materials offer to applied forces under different circumstances, invented by David Kirkaldy, is shown in Figs. 7229 to 7232.

Three hydraulic cylinders in one piece, with their rams, are placed at one end of this machine, the ram being pressed outwards against a cross-head, having attached to it four powerful rods. The rams are not fixed to the cross-head, and they can be used independently of each other—either the centre one alone, or the two outer ones, or all three, according to the strain required. The rams are

7229.

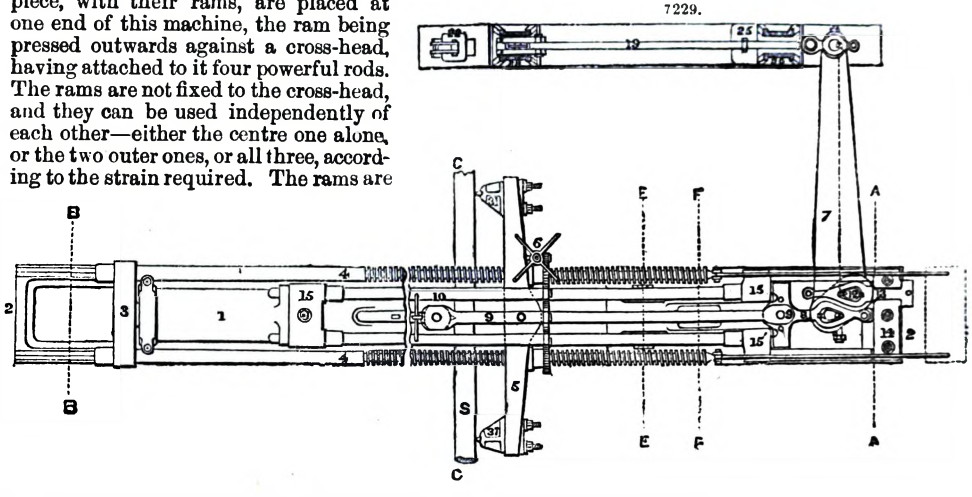

7238.

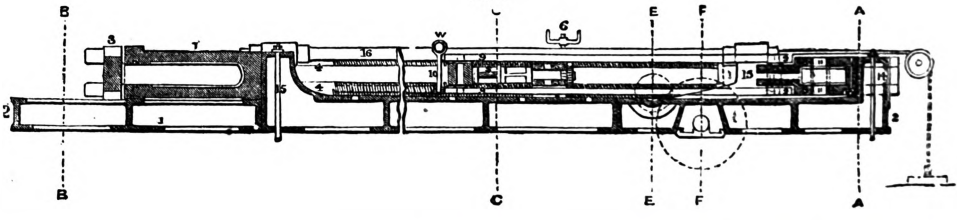

actuated by three pumps, two of which have the same area, but work with their strokes alternating, whilst the third is of larger effective area at first than either of the others, but is so contrived that by detaching a part of its plunger it may be worked afterwards with a smaller effective area. The communication of the pipe from the pumps is with the bottoms of the three cylinders, and a small screw-stop valve is applied to each cylinder. The hydraulic cylinders are fixed at one end of a long sole-plate or bed-frame, which is formed with V-grooves to guide a massive cross-head, fixed upon the four rods by screw nuts. For applying crushing strains, bending or transverse strains, and compressing, punching, or indenting strains, this cross-head is fixed on the rods so as to compress the specimen in the space between it and the cylinders; whilst for applying tensile or drawing and similar strains, the specimen is placed on the other side of the cross-head to draw the specimen towards the cylinders. The nuts, however, remain at the end of the rods, and tubular pieces of suitable lengths are put on the rods in halves between the nuts and the cross-head to transmit the strain from the nuts to the cross-head. In all applications of the apparatus the strain exerted by the rams is opposed or met by a system of levers combined with graduated steelyards, to which weights are applied whereby to measure the strain brought to bear on the specimen. The first lever works in a horizontal plane at the end of the machine opposite the rams, being supported by metal balls or by suspending links, and being acted upon by a T-piece, made in two parts, which receive

the end of the lever between them. In the case of crushing, bending, compressing, or similar strains, the T-piece is connected either by side rods or by upper and lower links to an inner cross-head,

7231.

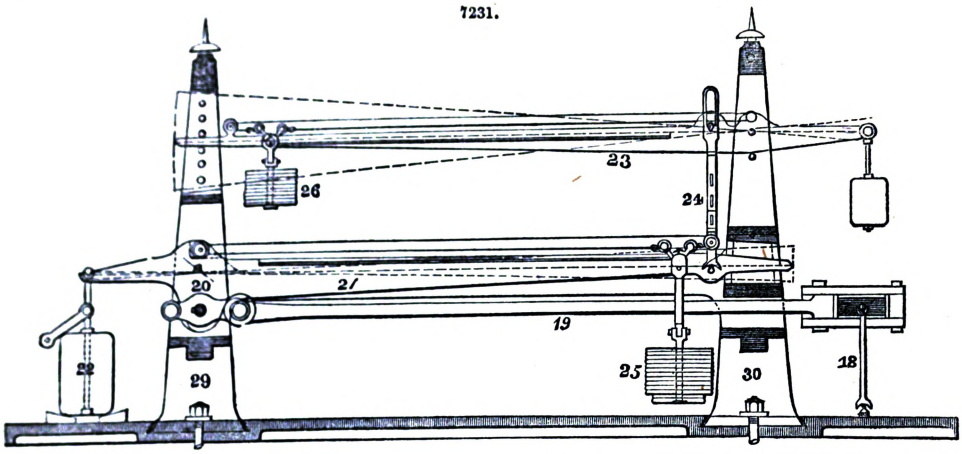

7232.

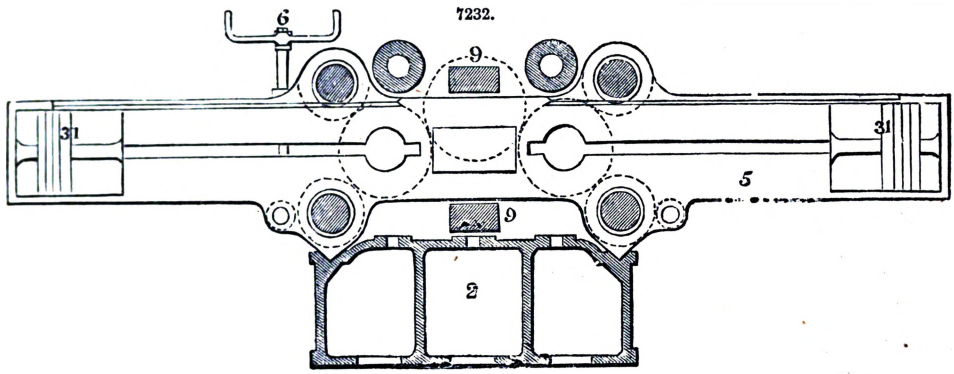

between which and the main cross-head the specimen is placed. In the case of tensile or drawing, and of shearing strains, the specimen is connected to the T-piece outside of or beyond the main cross-head. The lever has its fulcrum knife edges bearing in a forked piece fixed to the raised end of the sole-plate or bed-frame, or it may be made with round pins bearing on anti-friction rollers. The end of the long arm of the lever is connected by a link to a short arm, projecting vertically from a horizontal graduated steelyard, working in a vertical plane and fitted with appliances for weighing or measuring the strain transmitted by means of weights. The steelyard may be formed with round journals or pins resting on anti-friction wheels, or it may have its bearing by a combination of knife edges on surfaces disposed to meet the various strains. A weight is applied to the non-indicating end of the steelyard to counterbalance the weight of the long arm, so that the minutest strains may be measured, and this weight can be easily removed when the strain to be measured exceeds its amount, so that then so much less weight will require to be put on the yard. For the purpose of measuring greater strains, a second balanced steelyard is arranged above the first, and the strain is transmitted to it from the first by a strut or rod, which can be adjusted out of the way when the upper steelyard is not to be used. The steelyards are marked in the usual way to indicate the strains, and an alarm apparatus is fitted in connection to indicate when a particular or proof strain is arrived at in performing an experiment.

Provision is made for measuring and indicating change of form in specimens operated upon, whether by elongation, compression, bending, or otherwise; and the appliance for this purpose consists of two parts connected separately to the cross-heads or other parts of the apparatus between which the specimen is placed. One part comprises a rack gearing with a pinion on a pile carried in bearings, which with a stationary pointer form the other part.

Provision is made for indicating through several turns of the dial by forming on it a spiral groove in which there works a small slide acted on by the pointer, and this slide shows in what circle or convolution of the spiral any indication is to be read. In some cases there may be a movement between the part carrying the dial and the specimen, such movement interfering with the indication of the movement, exclusively due to the specimen, and to provide for such cases the pointer ordinarily fixed with a screw may be set free to be moved by a rack acting on a pinion formed on it, such rack being connected to the specimen and correcting any movement of the part carrying the dial. The indicating appliance thus arranged may be fixed on any convenient part of the machine.

For bending specimens or subjecting them to transverse strains the main cross-head has fitted to it two blocks, which can be adjusted near to or farther from the centre; and whilst these blocks are brought to bear on two parts of the specimen, a third block pressed in the opposite direction is made

to bear on the other side of the specimen and between the two other blocks. The blocks may be arranged to grip the specimen.

For applying torsional or twisting strains, the bed-frame of the machine is provided with bearings to receive the shaft or spindle to be tested; and in testing, two toothed wheels are fixed on the spindle, upon which wheels a strain is applied in one direction by means of racks jointed to the main cross-head, whilst the opposite strain is received through a lever fixed on the shaft between the two toothed wheels. Adjustable scales to show the amount of movement are put on the wheels, the pointers to such scales being attached to the holding lever, so as to show the total movement. Wheels of different sizes may be applied and at different distances apart, and scales may be put upon suitable parts of the apparatus to measure any change in the length of the specimen. The wheels may be acted upon by chains or other jointed or flexible connections.

To measure the force actually concerned in applying bursting or collapsing strains by fluid pressure, a cylinder is fitted to the chamber or vessel into which the water or fluid used in the operation is forced, and which vessel will be the vessel or structure to be tested in the case of a bursting strain, but will contain the vessel or structure to be tested in the case of a collapsing strain. The cylinder is fitted with a piston, and the chamber or vessel is placed in the machine in such a way that the rod of the piston may communicate the pressure on its area through the T-piece and lever to the steelyards. If the pressure of the atmosphere is to be used in collapsing the specimen or vessel, the cylinder and piston is arranged in the machine in such a way that the piston will be drawn outwards relatively to the vessel by the action of the hydraulic rams, and so tend to produce a vacuum inside the vessel, water or other liquid being contained therein.

The machine may also be used for measuring and indicating change of form or strength in a specimen when subjected to heat or cold, as the apparatus for applying the heat or cold may be easily introduced into the machine in such a way that the specimen under experiment may act on or be acted on by one or both cross-heads.

It is an important feature of the improved apparatus that the specimens operated upon are placed in a horizontal position, which has many practical advantages, and amongst other things it admits of the application of combinations of strains. Thus percussive, vibratory, jarring, and other strains, may be applied to the specimens whilst subjected to any desired degree of tensile, transverse, compressive, or similar strains.

When the apparatus is not required to apply great strains, one or two hydraulic cylinders or a screw or combination of screws may be substituted for the three hydraulic cylinders.

Fig. 7229 is a plan of the machine, with the strain-indicating apparatus in horizontal section; Fig. 7230 is a longitudinal vertical section of the main part of the machine; Fig. 7231 is a side elevation of the strain-indicating apparatus, with the framing in vertical section; and Fig. 7232 is a transverse vertical section taken at the lines C, C, Figs. 7229, 7230. The different parts represented in the figures are referred to by the numerals 1, 2, 3, and so on. The hydraulic cylinder 1 is fixed at one end of a long sole-plate or bed-frame 2, which, for convenience, is cast in four separate parts, and rigidly bolted to each other, and held down by tie-bolts to a massive foundation of masonry. The bed-frame is formed with V-grooves along the sides to guide the cylinder cross-head 3, which has attached to it the four rods 4, and to guide a second cross-head 5, which is fixed by screw nuts on the rods 4, these being screwed for the purpose. For applying crushing strains, bending or transverse strains, and compressing, punching, or indenting strains, this cross-head 5 is fixed on the rods 4 in such a position as to compress the specimen S in the space between it and the cylinder 1; whilst for applying tensile or drawing and similar strains, the specimen is placed on the other side of the cross-head 5 to draw the specimen towards the cylinder 1.

In Fig. 7229 the machine is shown as applying a bending strain to a specimen S. The rods 4 are represented as screwed for a considerable portion of their length, in order that the cross-head 5 may be adjusted upon them in any convenient position; and to facilitate such adjustment provision is made for working the four screw nuts simultaneously, they being formed with pinion-teeth connected by intermediate toothed wheels, and worked by a hand-shaft 6 through a pair of bevel-pinions. The working of the nuts backwards and forwards may be avoided by applying tubular pieces of suitable lengths to be put on the rods in halves between the nuts and the cross-head, in which case the nuts might always remain at the ends of the rods, the tubular pieces transmitting the strain to them from the cross-head when this is placed nearer to the cylinder. In all applications of the apparatus the strain exerted by the cylinder 1 is opposed or met by a system of levers combined with graduated steelyards, to which weights are applied to measure the strain brought to bear on the specimen. The first lever 7 works in a horizontal plane at the end of the machine opposite to the cylinder 1, being supported on metal balls or struts or by suspending links, and being acted upon by a T-piece 8 made in two parts, which receive the lever 7 between them. In the case of crushing, bending, compressing, or similar strains, the T-piece 8 is connected either by side rods or by upper and lower links 9, as shown in Figs. 7229, 7230, to an inner cross-head or block 10, between which and the main cross-head 5 the specimen S is placed. In the case of tensile or drawing, and of shearing and other similar strains, the specimen is connected to the T-piece 8 outside of or beyond the main cross-head 5. The strain of the T-piece is communicated to a vertical pin 11 fixed in the lever 7, and fitted with steel knife edges, which bear against steel pieces fitted in eyes which are formed in the upper and lower parts of the T-piece to receive the pin 11. The fulcrum knife edges of the lever 7 are fitted upon a similar pin 12 fixed in the lever, and they bear upon steel pieces fitted in eyes formed in a forked piece 13 fixed to the raised end 14 of the bed-frame 2. The strain acting between the end of the bed-frame and the abutment 15, against which the inner end of the cylinder 1 bears, is met by two cast-iron rods 16, as well as by the bottom of the bed-frame itself. These rods 16 are keyed at one end in the abutment 15, and at the other end in an abutment 15 formed on the bed-frame, and connected by side bars to the raised end or abutment 14. The first lever 7 is represented as supported by struts 18, at each end, the lever being fitted with knife edges to bear on the struts, and the struts bearing on knife edges on the bed-frames; and this

arrangement admits of the very slight movements of the lever with the least friction. The end of the long arm of the lever 7 is connected by a link 19 to a short arm 20 projecting vertically downwards from a horizontal graduated steelyard 21 working in a vertical plane, and fitted with appliances for weighing or measuring by means of weights the strain transmitted. The link 19 is connected to the first lever 7 by means of upper and lower plates connected together, and to the lever by pins, and formed with eyes, into which a pin in the lever is entered, and on steel pieces in which knife edges on the pin bear. The link is connected to the steelyard 21 in a similar way.

The steelyard 21 may be formed with round journals or pins resting on anti-friction wheels, but a combination of knife edges bearing on surfaces disposed to meet the various strains is preferable. A weight 22 is applied to the non-indicating end of the steelyard 21 to counterbalance the weight of the long arm, so that the minutest strains may be measured, and this weight can be easily removed when the strain to be measured exceeds its amount, so that then as much less weight will require to be put upon the yard. For the purpose of measuring greater strains a second balanced steelyard 23 is arranged above the first, and the strain is transmitted to it from the first by a strut or rod 24, which can be adjusted so as to be inactive when the upper steelyard is not to be used. The strut 24 is forked at both ends, and the strain is communicated by knife edges on the lower yard, and is received by knife edges on the upper one. The strut is in two pieces, which are keyed together, and when it is to be inactive the parts are keyed together in such a way as to shorten it, whilst the upper parts being looped round the upper knife edges, it is prevented from falling. The steelyards 21, 23, are marked in the usual way, and are provided with weights 25, 26, to indicate the strains, and a bell alarm apparatus is fitted in connection with each yard to indicate when a particular or proof strain is arrived at in performing an experiment. The weights are easily moved along the yards by means of endless cords passed round pulleys at each end, actuated by small hand-wheels. The yards are carried by two standards, 29, 30, each of which is formed in two pieces, so as to enclose the yards between them, and with openings for the points of the yards to work in, these openings being fitted with wooden striking pieces for the yards to come in contact with when any sudden movement takes place from a specimen giving way. With a similar object, wooden striking pieces are also fitted in the eyes of the T-piece 8, and on the raised abutment 14, where the T-piece would strike. Provision is further made for measuring and indicating change of form in the specimens operated upon, whether by elongation, compression, bending, or otherwise; and the appliance for this purpose consists of two parts to be connected separately to the cross-heads or other parts of the machine between which the specimen may be placed. See MATERIALS OF CONSTRUCTION, *Strength of*.

TIN. FR., *Étain*; GER., *Zinn*; ITAL., *Stagno*; SPAN., *Estaño*.

Tin, Sn. Atomic weight = 118. Molecular weight unknown.

Tin is found in nature as an oxide, sometimes mixed with sulphur. This sulphuret of tin, or tin pyrites, is found chiefly in the Cornish mines, but it is of little value commercially. Only a few localities produce this metal, though it is one of the earliest known. Cornwall has always been the main source of supply to the whole world, but recently extensive tin-producing districts have been discovered in Australia, and it is probable that these deposits, which have been proved to be very rich, will furnish large quantities of the metal in the future. Malacca, in the Malayan Peninsula, and some of the neighbouring islands, have long produced tin in small quantities, and the tin there found is in a nearly pure state. There is but one ore of tin of any importance, namely, the peroxide, which, in its pure state, consists of tin 78 and oxygen 22 per cent. The ore is of various colours, as grey, several shades of yellow, red, and black. Its specific gravity, which is a noteworthy feature, is 6·9. Tin ore occurs in mineral veins running through granite or slate rocks, or disseminated in crystals through their mass. The tin stone which is obtained from the veins or lodes, as they are called in Cornwall, is known as mine tin; while that procured by washing alluvial deposits is called stream tin. The latter is the result of the disintegration of granite and other rocks containing veins of tin. The ore is first roasted in contact with the air, in order to convert the whole of it into oxide; it is then heated in contact with carbon, the process converting the carbon into oxide of carbon, and the latter reducing the oxide of tin to the state of metallic tin.

$$\underset{\text{Oxide of tin.}}{Sn\,O_2} + \underset{\text{Oxide of carbon.}}{2\,C\,O} = \underset{\text{Carbonic anhydride.}}{2\,C\,O_2} + \underset{\text{Tin.}}{Sn}$$

Tin is a silvery white metal with a high metallic lustre. It possesses a crystalline texture, which may be made apparent by attacking its surface with an acid. The crystals are of the pyramidal or tetragonal system. It is in consequence of its crystalline texture that a bar of tin, when bent, emits a peculiar creaking sound known as the *cry* of tin. Tin is a soft metal, and very malleable; it may be beaten out into very thin laminæ, in which form it is known as *tinfoil*. Tin is susceptible of being pulverized directly, but it is usually obtained in a pulverized state by fusing it and keeping it violently agitated while solidifying. It fuses at a temperature of 442°. At ordinary temperatures it is not acted upon by exposure to the air; but it becomes rapidly oxidized when in a state of fusion, and at a red heat it burns with a brilliant white flame, producing stannic anhydride, $Sn\,O_2$. The acids, such as nitric acid or nitrate of potassa, act violently upon tin, and produce either metastannic acid $Sn_5\,H_{10}\,O_{15}$, or stannate of potassa $Sn\,K_2\,O_3$. Tin unites directly with phosphorus, sulphur, chlorine, bromine, and iodine. Hydrochloric acid dissolves it, with extrication of hydrogen, and forms protochloride of tin.

$$\underset{\text{Hydrochloric acid.}}{2\begin{pmatrix}H\\Cl\end{pmatrix}} + \underset{\text{Tin.}}{Sn} = \underset{\text{Protochloride of tin.}}{\begin{matrix}Sn\\Cl\end{matrix}\Big\}} + \underset{\text{Hydrogen.}}{\begin{matrix}H\\H\end{matrix}\Big\}}$$

Unlike all the metalloids we have noticed, tin forms with oxygen an oxide $Sn\,O$, that is a true basic anhydride, capable of combining directly with the acid anhydrides and the acids, with

extrication of water, and forming salts. These salts are distinguished by the following characteristics;—

1. Water decomposes them and forms an insoluble sub-salt, whilst a certain quantity of acid which has been liberated holds in solution another part of the salt not decomposed.

2. Potassa determines in them the formation of a precipitate which is soluble in an excess of the reagent, but which is again thrown down when the solution is exposed in a vacuum.

3. Chloride of gold produces in the solution of these salts a purple precipitate known as purple of Cassius.

4. With hydrosulphuric acid they give a brown precipitate soluble in hydrosulphate of ammonia, and boiling hydrochloric acid, but insoluble in ammonia.

The combinations of tin with the metalloids which we have previously considered are the following;—

Protochloride of Tin, $Sn Cl_2$.—The protochloride of tin may be obtained by dissolving the metal in hydrochloric acid; it is a solid crystallized substance, and it becomes volatile at a dull red heat. Water decomposes it into hydrochloric acid and oxychloride of tin, $Sn_2 Cl_2 O$.

$$\underset{\text{Protochloride of tin.}}{2\left(\begin{matrix}Sn''\\Cl_2\end{matrix}\right)} + \underset{\text{Water.}}{\left(\begin{matrix}H\\H\end{matrix}\right)O} = \underset{\text{Oxychloride of tin.}}{Sn_2 Cl_2 O} + \underset{\text{Hydrochloric acid.}}{2\left(\begin{matrix}H\\Cl\end{matrix}\right)}$$

The solution of bichloride of tin, when heated with hydrochloric acid and sulphurous anhydride, gives a yellow deposit of bisulphide of tin.

$$\underset{\text{Protochloride of tin.}}{6\left(\begin{matrix}Sn\\Cl_2\end{matrix}\right)} + \underset{\text{Sulphurous anhydride.}}{2\,SO_2} + \underset{\text{Hydrochloric acid.}}{8\left(\begin{matrix}H\\Cl\end{matrix}\right)} = \underset{\text{Bisulphide of tin.}}{SnS_2} + \underset{\text{Bichloride of tin.}}{5\left(\begin{matrix}Sn\\Cl_4\end{matrix}\right)} + \underset{\text{Water.}}{4\left(\begin{matrix}H\\H\end{matrix}\right)O}$$

Protochloride of tin has a strong affinity for chlorine, which converts it into perchloride of tin, and for oxygen, which converts it into a compound of perchloride of tin and stannic acid.

$$\underset{\text{Bichloride of tin.}}{2\,Sn Cl_2} + \underset{\text{Oxygen.}}{\begin{matrix}O\\O\end{matrix}} + \underset{\text{Water.}}{\begin{matrix}H\\H\end{matrix}O} = \underset{\text{Stannic acid.}}{\begin{matrix}(Sn\,O)''\\H_2\end{matrix}O_2} + \underset{\text{Perchloride of tin.}}{Sn Cl_4}$$

Perchloride of Tin.—Perchloride of tin is prepared by passing a stream of chlorine in excess over tin slightly heated. It is a smoking liquid, which gives with water a crystallizable hydrate, $Sn Cl_4$, 5 aq. The bases decompose it into stannate and metallic chloride.

$$\underset{\text{Perchloride of tin.}}{\begin{matrix}Sn\\Cl_4\end{matrix}} + \underset{\text{Potassa.}}{6\left(\begin{matrix}K\\H\end{matrix}\right)O} = \underset{\text{Stannate of potassa.}}{\begin{matrix}(Sn\,O)\\K_2\end{matrix}O_2} + \underset{\text{Chloride of potassium.}}{4\left(\begin{matrix}K\\Cl\end{matrix}\right)} + \underset{\text{Water.}}{3\left(\begin{matrix}H\\H\end{matrix}\right)O}$$

Hydrosulphuric acid gives with the perchloride a yellow precipitate of sulphide of tin, soluble in ammonia, hydrosulphate of ammonia and boiling hydrochloric acid. Chloride of gold does not precipitate it.

Of the bromides and iodides of tin, little need be said. The protobromide is prepared in the same way as the protochloride, and it possesses similar qualities. The same may be said of the perbromide. The proto-iodide of tin is prepared by the direct combination of one atom of tin and two atoms of iodine. Its properties are similar to those of the protochloride and the protobromide. The periodide is also obtained by direct synthesis, and it possesses qualities similar to those of the perchloride and the perbromide.

Fluorides of Tin.—Two fluorides of tin are known, a protofluoride $Sn Fl_2$, and a bifluoride $Sn Fl_4$. They are obtained by treating the protoxide and the stannic anhydride by hydrofluoric acid.

$$\underset{\text{Protoxide of tin.}}{Sn O} + \underset{\text{Hydrofluoric acid.}}{2\left(\begin{matrix}H\\Fl\end{matrix}\right)} = \underset{\text{Protofluoride of tin.}}{Sn Fl_2} + \underset{\text{Water.}}{\begin{matrix}H\\H\end{matrix}O}$$

$$\underset{\text{Stannic anhydride.}}{Sn O_2} + \underset{\text{Hydrofluoric acid.}}{4\left(\begin{matrix}H\\Fl\end{matrix}\right)} = \underset{\text{Perfluoride of tin.}}{Sn Fl_4} + \underset{\text{Water.}}{2\left(\begin{matrix}H\\H\end{matrix}O\right)}$$

Protoxide of Tin.—When protochloride of tin is precipitated by potassa, a minimum hydrate of tin, $\begin{matrix}Sn\\H_2\end{matrix}O_2$, is obtained, which is of a white colour and insoluble in water. It is capable of acting both as a base and as an acid, that is, it will produce the double decomposition both with the bases and the acids.

$$\underset{\text{Minimum hydrate of tin.}}{\begin{matrix}Sn\\H_2\end{matrix}O_2} + \underset{\text{Sulphuric acid.}}{\begin{matrix}SO_2\\H_2\end{matrix}O_2} = \underset{\text{Sulphate of tin.}}{\begin{matrix}SO_2\\Sn\end{matrix}O_2} + \underset{\text{Water.}}{2\left(\begin{matrix}H\\H\end{matrix}O\right)}$$

$$\underset{\text{Minimum hydrate of tin.}}{\begin{matrix}Sn\\H_2\end{matrix}O_2} + \underset{\text{Potassa.}}{2\left(\begin{matrix}K\\H\end{matrix}O\right)} = \underset{\text{Stannite of potassa.}}{\begin{matrix}Sn\\K_2\end{matrix}O_2} + \underset{\text{Water.}}{2\left(\begin{matrix}H\\H\end{matrix}O\right)}$$

When the watery solution of stannite of potassa is left in a vacuum, it deposits black crystals of anhydrous oxide of tin, which decrepitate when heated and are changed into small flakes of an olive

colour. The same solution, when subjected to the action of heat, is converted into stannate of potassa and tin which is thrown down.

$$\underset{\text{Stannite of potassa.}}{2\left(\begin{matrix}Sn\\K_2\end{matrix}\right\}\Theta_2\Big)} + \underset{\text{Water.}}{\begin{matrix}H\\H\end{matrix}\Big\}\Theta} = \underset{\text{Stannate of potassa.}}{\begin{matrix}(Sn\,\Theta)\\K_2\end{matrix}\Big\}\Theta_2} + \underset{\text{Potassa.}}{2\left(\begin{matrix}K\\H\end{matrix}\right\}\Theta\Big)} + \underset{\text{Tin.}}{Sn}$$

The minimum hydrate of tin when boiled in an excess of ammonia loses water, leaving anhydrous protoxide of tin of an olive colour.

$$\underset{\text{Hydrate of tin.}}{\begin{matrix}Sn\\H_2\end{matrix}\Big\}\Theta_2} = \underset{\substack{\text{Anhydrous}\\\text{protoxide of tin.}}}{Sn\,\Theta} + \underset{\text{Water.}}{\begin{matrix}H\\H\end{matrix}\Big\}\Theta}$$

If the protochloride of tin is precipitated by an excess of ammonia, boiled for a moment and the mass dried without separating the hydrochlorate of ammonia formed, protoxide of tin is obtained of a bright red colour. This oxide assumes an olive hue when rubbed with a hard substance. Thus the protoxide of tin is polymorphous, and the most stable of the three forms it may affect is that which presents an olive colour.

Stannic Anhydride, $Sn\,\Theta_2$.—Stannic anhydride is produced by calcining the stannic and metastannic acids. It constitutes a white mass insoluble in water and capable of giving stannates when heated with an excess of potassa or soda.

Stannic Acid, $\begin{matrix}(Sn\,\Theta)\\H_2\end{matrix}\Big\}\Theta_2$.—This acid is nothing but the first anhydride of the unknown acid $\begin{matrix}Sn\\H_4\end{matrix}\Big\}\Theta_4$. It is obtained by precipitating the stannates by hydrochloric acid.

$$\underset{\text{Stannate of potassa.}}{\begin{matrix}(Sn\,\Theta)\\K_2\end{matrix}\Big\}\Theta_2} + \underset{\text{Hydrochloric acid.}}{2\left(\begin{matrix}H\\Cl\end{matrix}\right\}\Big)} = \underset{\text{Stannic acid.}}{\begin{matrix}(Sn\,\Theta)\\H_2\end{matrix}\Big\}\Theta_2} + \underset{\substack{\text{Chloride of}\\\text{potassium.}}}{2\left(\begin{matrix}K\\Cl\end{matrix}\right\}\Big)}$$

Stannic acid is a white gelatinous substance, soluble in dilute nitric and sulphuric acid. Under the influence of a gentle heat it is converted into metastannic acid.

$$5\left(\begin{matrix}(Sn\,\Theta)\\H_2\end{matrix}\right\}\Theta_2\Big) = \begin{matrix}(Sn\,\Theta)_5\\H_{10}\end{matrix}\Big\}\Theta_{10}$$

At a red heat it loses its water, and is converted into stannic anhydride. It combines with the bases giving salts the formula of which is $\begin{matrix}(Sn\,\Theta)\\M\,H\end{matrix}\Big\}\Theta_2$.

Metastannic Acid, $\begin{matrix}(Sn\,\Theta)_5\\H_{10}\end{matrix}\Big\}\Theta_{10}$.—This is the first anhydride of the unknown pentastannic acid, $\begin{matrix}Sn_5\\H_{12}\end{matrix}\Big\}\Theta_{16}$. It is obtained by heating tin with nitric acid.

$$\underset{\text{Tin.}}{15\,Sn} + \underset{\text{Water.}}{5\left(\begin{matrix}H\\H\end{matrix}\right\}\Theta\Big)} + \underset{\text{Nitric acid.}}{20\left(\begin{matrix}N\,\Theta_2\\H\end{matrix}\right\}\Theta\Big)} = \underset{\text{Metastannic acid.}}{3\left(\begin{matrix}(Sn\,\Theta)_5\\H_{10}\end{matrix}\right\}\Theta_{10}\Big)} + \underset{\substack{\text{Binoxide of}\\\text{nitrogen.}}}{20\,N\,\Theta}$$

Metastannic acid is a white, crystalline substance, insoluble in water and in dilute nitric and sulphuric acids; it dissolves, however, in hydrochloric acid, and in concentrated sulphuric acid. Water does not throw it down from these solutions.

Metastannic acid is insoluble in ammonia when it has been prepared by means of nitric acid. But if it is thrown down from the solution of one of its salts by means of an acid, it dissolves readily in that alkali. With the bases it forms salts, the formula of which is $\begin{matrix}(Sn\Theta)_5\\H_8\\M_2\end{matrix}\Big\}\Theta_{10}$. When heated with an excess of the base, these salts are converted into stannates.

Sulphides of Tin.—There are two sulphides of tin, a protosulphide $Sn\,S$, and a bisulphide $Sn\,S_2$. Both of these may be obtained by passing sulphuretted hydrogen through the corresponding chlorides.

$$\underset{\substack{\text{Perchloride}\\\text{of tin.}}}{\begin{matrix}Sn\\Cl_4\end{matrix}\Big\}} + \underset{\substack{\text{Sulphuretted}\\\text{hydrogen.}}}{2\left(\begin{matrix}H\\H\end{matrix}\right\}S\Big)} = \underset{\substack{\text{Bisulphide}\\\text{of tin.}}}{Sn\,S_2} + \underset{\substack{\text{Hydrochloric}\\\text{acid.}}}{4\left(\begin{matrix}H\\Cl\end{matrix}\right\}\Big)}$$

$$\underset{\substack{\text{Protochloride}\\\text{of tin.}}}{\begin{matrix}Sn\\Cl_2\end{matrix}\Big\}} + \underset{\substack{\text{Sulphuretted}\\\text{hydrogen.}}}{\begin{matrix}H\\H\end{matrix}\Big\}S} = \underset{\substack{\text{Bisulphide}\\\text{of tin.}}}{Sn\,S} + \underset{\substack{\text{Hydrochloric}\\\text{acid.}}}{2\left(\begin{matrix}H\\Cl\end{matrix}\right\}\Big)}$$

Another method of preparing the bisulphide of tin is to heat together 12 parts of tin amalgamated with 6 parts of mercury, 7 parts of sulphur, and 6 parts of chloride of ammonium, until the mercury and the chloride of ammonium are completely evaporated. When prepared in this way, the bisulphide of tin is known as mosaic gold. Both sulphides of tin unite with the alkaline sulphides, producing sulphosalts. See ORES, *Machinery and Processes employed to Dress.*

TUNNELLING. FR., *Percement des tunnels;* GER., *Tunnelbau;* ITAL., *Perforazione delle gallerie;* SPAN., *Construccion de túneles.*

See RAILWAY ENGINEERING.

TURBINE WATER-WHEEL. FR., *Turbine;* GER., *Turbine;* ITAL., *Turbine;* SPAN., *Turbina.*

A turbine is a water-wheel, having generally a vertical axis, to which motion is imparted by a column of water entering at the centre and passing off at the circumference, as in that originally

invented by Fourneyron; or the reverse, as in Thomson's vortex wheel. In another arrangement, that of Burdin, the water enters from above the wheel and passes off beneath; in this system therefore the distance of the water from the axis remains constant. In some cases, as for example, Jonval's turbine and Gerard's screw wheel, the axis is horizontal.

Turbines are usually divided into high and low pressure, the former being driven by a small body of water having a high fall, and are therefore particularly suitable for erection in hilly districts, where the supply of water is small and variable, while at the same time there exist great facilities for the easy construction of reservoirs; the latter are adapted to a large body of water having a low fall, in some cases not more than 9 inches.

The oldest forms of wheels having a vertical axis are found in the south of France and in Algeria. The most simple of these, called *rouets volants*, consist merely of an upright shaft on which is fixed the wheel, having plain curved floats, driven by the impact of a column of water discharged on the upper surface from a wooden trough or spout. The maximum effect obtained from these wheels, under the most favourable circumstances, is ·35 of the absolute work due to the fall. Another form found in these parts, called *roues à cuve*, consists of a wheel having curved or spoon-shaped buckets, erected in a casing of wood or masonry; the water being applied by a pipe at one point on the circumference, and making its exit at the centre of the wheel from the bottom of the case or tub.

It was from an examination of this wheel that Fourneyron was led to make those experiments which resulted in the invention of the modern turbine, the first being erected by him in Franche-Comté in the year 1827. These turbines, as well as several others, have already been illustrated and described under the head of Hydraulic Machines; we shall therefore confine ourselves to an examination of the principles which govern the action of these wheels, and of the proper proportions which should exist among their several parts in order to obtain the maximum effect from any given fall. Numerous experiments made by Morin to determine the duty of turbines and the proportions of their several parts which give a maximum duty, have thrown considerable light upon these difficult problems. In some of the following remarks we shall avail ourselves of the experience of this celebrated hydraulic engineer.

7233.

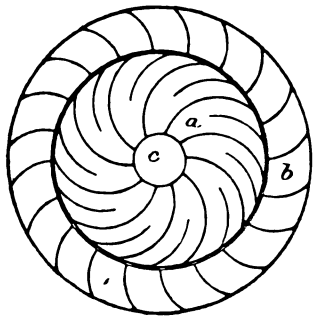

Turbines which receive the Water at the centre and discharge from the circumference.—From Fig. 7233 it will be seen that this wheel is composed of two separate and opposed series of radiating buckets; those in the interior *a* being fixed and serving to direct the water, conveyed to them from the fall by the pipe *c*, with a tangential motion upon the face of the buckets *b* which constitute the wheel proper, and to which motion is thus imparted.

Percentage of Work.—From a number of experiments which have been made with this class of wheel, it has been found that if we make n the number of revolutions made by the wheel in one minute, V the velocity due to the total fall, R the exterior radius of the wheel, the number n being comprised within the limits of the equation $n = \frac{3 \cdot 3\ V}{R}$ and $n = \frac{5 \cdot 6\ V}{R}$, when the opening of the directing vanes or sluices exceeds $\frac{2}{3}$ the height of the buckets, the useful effect transmitted by the wheel will be represented, to within $\frac{1}{15}$, by the formula $P\ v = 40 \cdot 5\ Q\ H$ to $P\ v = 43 \cdot 7\ Q\ H$ foot pounds. Where P equals the mean force transmitted to the outer circumference of the wheel in pounds; V the velocity of the outer circumference of the wheel in feet a minute; Q the quantity of water in cubic feet passing in one minute, and H the total fall in feet.

When the opening is from $\frac{1}{2}$ to $\frac{2}{3}$ the height of the buckets, the useful effect will not be more than $P\ v = 37 \cdot 4\ Q\ H$ to $P\ v = 41 \cdot 0\ Q\ H$ foot pounds; and for smaller openings it will decrease still faster.

To exemplify the use of the formula, let it be required to find the useful effect transmitted by one of Fourneyron's turbines under the following conditions. Quantity of water passing in one minute 1680 cub. ft. = Q; total fall 22 ft. = H; the absolute work of the motor is

$$1680 \times 22 \times 62 \cdot 4 = 2303347 \text{ foot pounds};$$

and the number of revolutions being kept between the indicated limits, we shall have

$$40 \cdot 5 \times 36960 = 1496880 \text{ to } 43 \cdot 7 \times 36960 = 1611152 \text{ foot pounds}$$

for the amount of useful effect.

Proportions of Parts.—In calculating the proportions which should exist between the various parts of a wheel of this description we shall have, R the interior radius of the sluice cylinder, R′ the exterior radius of the turbine, R″ the interior radius of the turbine, and seeing that the mean useful effect is equal to ·65 of the absolute work of the motor, we shall have the relation $P\ v = 40 \cdot 5\ Q\ H$, and $Q = \frac{P\ v}{40 \cdot 5\ H}$, from which we shall be able to determine the volume of water Q passing in one minute necessary with a given fall H to obtain the required useful effect $P\ v$. If the volume of water Q is known, the above formula will give the useful effect.

In order to obtain the maximum effect, the bottom of the wheel should be placed a few inches above the mean level of the standing tail-water.

The mean velocity of the water in the sluice should not exceed 5 ft. a second; and the radius of this cylinder is calculated by the formula $R = \sqrt{\frac{Q}{4 \cdot 712}}$. Adding to the result thus obtained 1·2 in. in order to allow for the thickness of the metal and a slight amount of play or clearance

between the two cylinders, we shall have the interior radius of the wheel $R'' = R + 1{\cdot}2$ in.; and the exterior radius will be $R' = 1{\cdot}33\ R''$.

Dimensions and Number of the Directing Vanes or Guides, and of the Buckets.—When the quantity of water passing through the wheel in one minute is between 13,000 and 20,000 gallons, the thickness a of the sheet of water passing between two consecutive vanes, or the shortest distance of the latter apart, should not exceed 2·4 in. And in proportion as the quantity of water decreases, this distance should also be reduced. The distance between two consecutive vanes measured on the circumference R will be $l = 2a +$ from ·16 to ·20 in., according to the thickness of the iron plate of which they are made. Dividing the circumference of the sluice cylinder 6·28 R by l and taking the nearest whole number of the quotient which is divisible by several factors, for the number n of the directing vanes or guides, the number n' of the buckets will be $n' = 1{\cdot}33\ n$. The interior height e of the turbine and the opening of the sluice will be $e = \frac{3{\cdot}14\ R^2}{n\ a}$. If, however, the quantity of water sometimes falls considerably below and at other times rises considerably above the average, it is better to increase the height e, and to divide the turbine by diaphragms of thin plate iron, into two or more horizontal sections.

The mean velocity of the exterior circumference of the turbine will be $V = {\cdot}55\ \sqrt{2gH}$ to ${\cdot}60\ \sqrt{2gH}$.

Observations.—The preceding formulæ are only applicable to falls of 6 ft. 6 in. and under. For higher falls, or where the velocity of the stream is great, the size of the wheel should be increased by making $R' = 1{\cdot}4\ R''$ for falls ranging from 6·6 to 16·4 ft.; and for still higher falls $R' = 1{\cdot}5\ R''$.

The distance between the buckets on the interior and exterior circumferences of the wheel will be found by the formulæ $\frac{6{\cdot}28\ R'}{n'}$ and $\frac{6{\cdot}28\ R''}{n'}$; and deducting the thickness of the metal employed, we shall have the distance l and l' from one bucket to the next, measured on these circumferences. The shortest distance a' from one bucket to the next, including the thickness of the metal, will be approximatively determined by the formula $a' = \frac{6{\cdot}28\ R''}{2n'}$. And deducting the thickness of the metal we shall have that assumed by the sheet of water when escaping from the wheel.

Mode of delineating the Buckets.—The number n of the buckets of the turbine being determined, as well as their shortest distance a' at the exterior circumference, divide this circumference into the number n of equal parts, as 1 2, 2 3, and so on, Fig. 7234. From each of these points draw tangents as 2 A, and lines as 2 B inclined at 25° to the tangents. From the points 1, 2, as centres, with radius 1 1′, 2 2′, equal to the shortest interior distance a of the buckets, describe arcs of circles; increase this radius by the thickness of the metal forming the buckets, and describe other arcs, as 1 1″, 2 2″; then the interior curve of the buckets will be tangential to these arcs, and the exterior curve tangential to the arcs 1 1′, 2 2′. The exterior surface of the bucket may then be determined in the following manner. Produce the line 2 2‴ outside the exterior circumference and make 2 2‴ equal 2 2′; join the points 1 and 2‴. At the centre of the line 1 2‴ erect a perpendicular, and the point where this perpendicular cuts the line 2 2′ produced will be the centre of the arc of the circle forming between the points 2 and 1′ the profile of the bucket. For the portion of this profile comprised between the point 1′ and the interior circumference we proceed in the following manner. From the point C, with radius C 2″, describe an arc cutting the inner circumference in D, which will complete the trace of the bucket. The position of the point C is determined in the following manner. From the centre of the wheel O draw a line, as O C, cutting the line 2 2′ prolonged in a point C situate outside the interior circumference, bisect the line in d, and from d, with radius d O, describe a semicircle which will cut the interior circumference of the wheel as at D; then, if the distance D C equals C 2″, C is the point required. If the distance D C is less than C 2″ draw the line O C nearer to 2″, if it is greater draw it farther from 2″. After two or three trials the position of the point C may be found with sufficient accuracy for all practical purposes. In order to narrow the discharging channels a little at their commencement, it is necessary to increase the thickness of the bucket on its exterior surface. The form of curve 2′ a b which should be adopted may be traced with sufficient accuracy by hand, taking care, however, that it starts tangentially from the first part at 2′ and gradually rejoins the interior surface of the bucket at D.

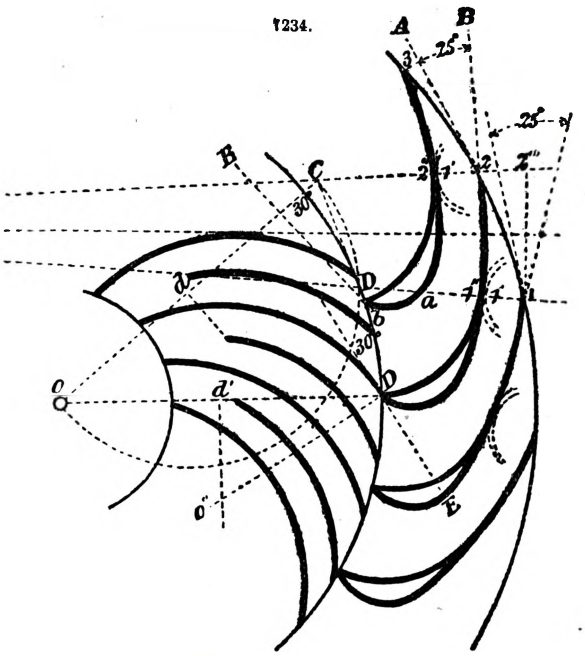

To trace the Directing Vanes.—From the point D draw a line D E making with the tangent D F on the interior circumference an angle of 30°; this will give the direction which should be taken by the water when leaving the supply cylinder. At the point D on the line D E erect a perpendicular D O″; from the centre d' of the line D O erect a perpendicular d' O″; and the point O″ where these perpendiculars intersect will be the point from which to describe with radius O″ D the profile of the directing vane. The half only of these directing vanes will be extended to the central supply cylinder; the length of the remainder being determined by a circle drawn from the centre O with radius O O″.

Example.—Let it be required to construct a turbine of 40 horse-power for a fall of 6 ft., which shall return a useful effect of ·65 of the total work. Then we shall have $Q = \frac{33000 \times 40}{40{\cdot}5 \times 6} = 5432$ foot pounds.

The radius of the sluice cylinder will be $R = \sqrt{\frac{5432}{4{\cdot}712}} = 33{\cdot}5$ in., and adding to this 1·2 in. for the thickness of metal and clearance, we shall have R″ = 34·7 in., and R′ = 1·33 × 34·7 = 49·7 in.

Taking $a = 2{\cdot}4$ in. and deducing from it the distance apart of the buckets on the interior circumference of the wheel $l = 2a = 4{\cdot}8$ in.; then $n = \frac{6{\cdot}28\,R''}{l} = 43{\cdot}31$, and taking the round number $n = 44$ for the number of directing vanes, we shall have $n' = 58$ for the number of buckets. The distance apart of the vanes will be $\frac{6{\cdot}28 \times 34{\cdot}7}{44} = 4{\cdot}93$ in., and the thickness of the metal being taken as ·2 in., we shall have $a = 2{\cdot}66$ in. The arc occupied by each bucket will be $\frac{6{\cdot}28 \times 49{\cdot}7}{58} = 5{\cdot}4$ in.; and the thickness of the sheet of water passing between two consecutive buckets will be $a' = 2{\cdot}7$ in.

The velocity of the exterior circumference of the wheel in feet a second will be $V'' = {\cdot}55\sqrt{64{\cdot}4 \times 6} = 10{\cdot}8$, and the number of revolutions made by the turbine in one minute will be $N = \frac{10{\cdot}8 \times 60}{6{\cdot}28 \times 2{\cdot}9} = 30{\cdot}6$.

Wheels of this kind may be erected with advantage under any fall whether high or low; they occupy but little space, and their weight in comparison with the power which they exert is very small. They exert a useful effect equal to ·65 and often to ·70 of the absolute work of the fall, when the sluice-gates are open nearly or quite to the full height of the wheel. They may be driven at varying velocities without any notable variation in the maximum effect. They will work at a great depth under water without the proportion of useful effect to the absolute work being sensibly diminished; so that by placing them at the lowest level of the water, we may at all times utilize the full height of the fall.

This wheel possesses the following defect. When the opening of the sluice-gates is less than two-thirds the height of the wheel, the useful effect will be found to decrease in proportion as the openings become smaller. This constitutes a serious defect in those situations where the supply of water is very variable. In fact, in the time of floods the wheel with its sluice-gates open to their full extent will, although drowned, return a useful effect of ·70 of the total work of the fall; whilst in seasons of drought when the supply of water is small, and the height of the fall at its maximum, as the sluices can be opened but a fraction of the height of the wheel, the useful effect will fall to ·60 and often to ·50 of the total work This defect may however, to a great extent, be remedied by the employment of horizontal diaphragms, dividing the wheel into several horizontal zones.

A regulator may be used with this turbine, but in that case the sluices cannot be opened to their full extent.

Turbines which receive the Water at the circumference and discharge from the centre.—The action and construction of this class of wheel has been fully described under the head of Hydraulic Machines, pages 1923 and 1932.

Turbine which receives the Water from above and discharges from the lower side.—This turbine is composed of two cast-iron zones or rings placed one above the other, Fig. 7235, the lower one, which is the wheel proper, containing the buckets *b*, which are constructed with helicoidal curved surfaces; in the upper zone, which is fixed, are placed the directing vanes or guides *a*, which serve to discharge the water at the proper angle on the face of the buckets beneath. The quantity of water admitted to the wheel by the guides is regulated by the vertical rods *c* which, by means of a very simple contrivance, may be raised and lowered together at pleasure. The pivot which supports the vertical axis of the wheel, instead of being in the water, is placed above. In situations exposed to great and long-continued floods these wheels are constructed with a double system of guides and buckets as *a a′*, *b b′*, Fig. 7236; and by this means they may be easily adapted to the passing of very varying quantities of water.

Useful Effect.—From a vast number of experiments which have been made it has been found that when the vertical rods are raised so as to leave the openings of the directing vanes entirely free, the useful effect transmitted by this wheel will equal from ·68 to ·70 of the absolute work of the fall, and we shall have the formula $P\,v = 42{\cdot}4\,Q\,H$ to $Pv = 43{\cdot}6\,Q\,H$. And when the rods are lowered so as to reduce the quantity of water discharged in the proportion of 4 to 3, the useful effect will not fall below ·575.

Example.—What is the useful effect given by a wheel of this class under the conditions $Q = 9{\cdot}4$ cub. ft. and $H = 5$ ft.? The rods being raised so as to allow of the maximum discharge of water, we shall have by the foregoing rule $P\,v = 42{\cdot}4 \times 9{\cdot}4 \times 5 = 1992{\cdot}8$.

Construction.—If the volume of water Q is not known, it may be calculated by the formula $Q = \frac{P\,v}{42{\cdot}4\,H}$, the notation of which has already been given.

7235.

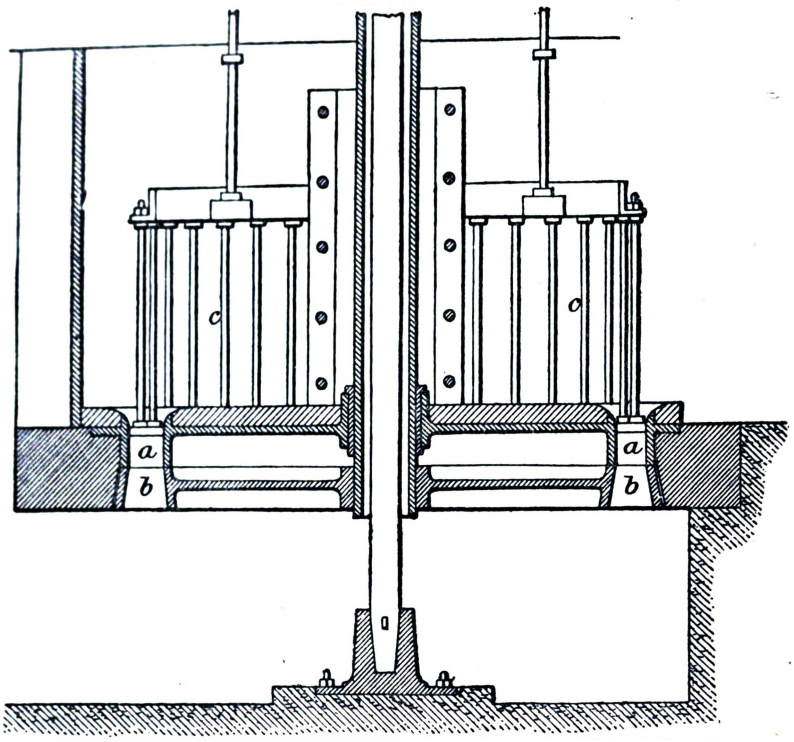

The turbine should be so placed that the under side of the wheel is a short distance above the usual level of the tail water.

7236.

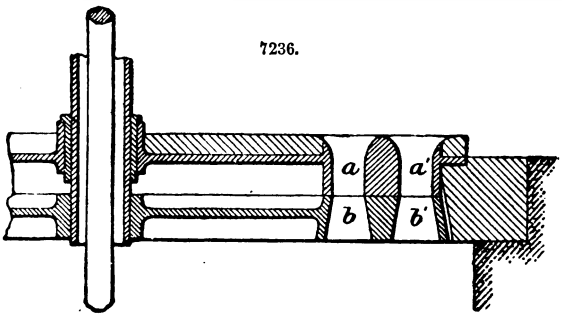

The thickness a of the sheet of water passing between the directing vanes should not exceed 2·4 to 3·1 in. for large volumes of water, usually it is limited to 1·6 or 2·0 in.; and the angle made by the mean fluid vein with the upper surface of the wheel will be 25°. The number n of the guides will be half the number n' of the buckets, and we shall have $n' = 2\,n$. The length e of the supply channels, measured in the direction of the radius, will be equal to three or four times the thickness of a; but where the quantity of water discharged is very great, this length may be still further increased. The guides being generally of cast iron they will occupy on the circumference of the fixed portion of the turbine a thickness of about ·4 in. The portion l of the mean circumference corresponding to the lower side of each supply channel will be found by the formula $l = \frac{a + {\cdot}4}{\text{sin. } 25^\circ} = \frac{a \times {\cdot}4}{{\cdot}423}$. The number n of the supply channels will be $n = \frac{Q}{42{\cdot}4\,a\,e\,\sqrt{64{\cdot}4\,H}}$. The mean radius R will be calculated by the formula $R = \frac{n\,l}{6{\cdot}28}$. On each side of this circumference, lay off in the direction of the radius, $\frac{1}{2}\,e$, and the circles drawn through the points thus obtained will give the width of the directing vanes and the upper side of the buckets; the lower side of the buckets should be increased by at least ·1, in order to allow of the free discharge of the water. The thickness of the sheet of water flowing from the buckets of the wheel, or their shortest distance a' from the under side of one bucket to the next, will be $\frac{1}{2}\,a$, the sheet of water flowing between two consecutive directing vanes or guides. The angle formed by the buckets with the under side of the wheel should be about 30°. The height of the wheel h', not including the guides, will be three or four times the thickness a.

Mode of delineating the Buckets.—The velocity U of the water upon the turbine being given by the formula of approach $U = {\cdot}9\,\sqrt{2\,g\,H}$, the velocity of the mean circumference of the wheel will be $V = 6\,\sqrt{2\,g\,H}$. Draw through the point m, Fig. 7237, situate on the mean circumference

of the wheel, a line making with the horizon an angle of 25°; mark off on this line a length $m\,b$, representing to a certain scale the velocity U. Upon the horizontal passing through the same point m, lay off the length $m\,a = \mathrm{V}$, and construct the parallelogram $m\,a\,b\,c$, of which the side $m\,c$ will represent the direction and the value of the velocity of the water, requisite to bring it without shock, upon the buckets; and the mean profile of the bucket will be an arc of a parabola passing from the point m tangentially to the line $m\,c$, and joining the under side of the wheel at m', where it is tangential to the line $m'\,n$ making with the horizon an angle of 30°. The axis of this parabola may be found by the proportion

$$m\ \mathrm{P} = \frac{h \text{ tang. } 30°}{\text{tang. } 30° + \text{tang. } c'\,m\,a'},$$

in which h' is the height of the turbine, not including the guides, and the angle $c'\,m\,a'$ is furnished by the trace. Knowing the axis of the parabola it will be easy to complete the curve. The profile thus determined is that which corresponds to the mean circumference of the wheel, and when the wheel is narrow the same profile may be adopted for the sides. When, however, the length c is considerable, it is better to draw, by the same method, the profiles corresponding to the outer and inner circumferences as well as the mean profile.

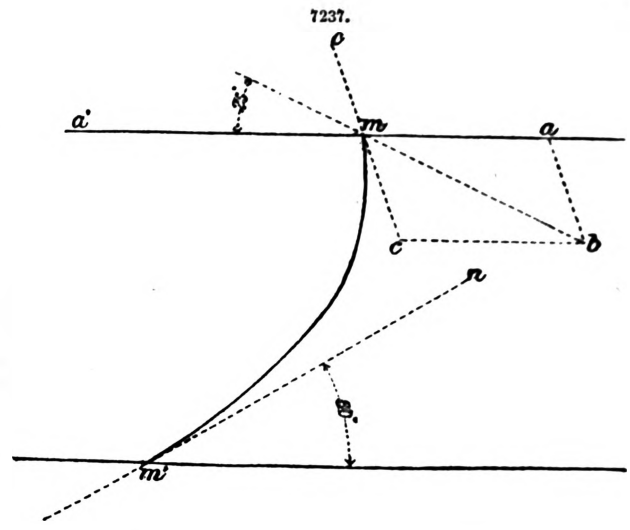

Example.—Let it be required to construct a double turbine under the following conditions. The quantity of water to be discharged in ordinary times is 57 cub. ft., with a fall of 10 ft.; in the time of floods the water is increased to 85 cub. ft. while the fall is reduced to 7 ft.

The total force will equal in ordinary times $57 \times 62{\cdot}32 \times 10 = 36522$ foot pounds, and in times of flood $85 \times 62{\cdot}32 \times 7 = 37073$ foot pounds.

For the proportions of the exterior wheel, which is worked by itself under ordinary conditions, we shall have $n\,a\,e = \dfrac{\mathrm{Q}}{{\cdot}68\sqrt{2\,g\,\mathrm{H}}} = \dfrac{57}{{\cdot}68\sqrt{64{\cdot}4 \times 10}} = 3{\cdot}3$ sq. ft. If we take $a = 2{\cdot}4$ in. $= {\cdot}2$ ft., $e = 3\,a = 7{\cdot}2$ in. $= {\cdot}6$ ft., we shall have $n = \dfrac{3{\cdot}3 \text{ sq. ft.}}{{\cdot}2 \text{ ft.} \times {\cdot}6 \text{ ft.}} = 27{\cdot}5$, from which we take the nearest whole number $n = 28$. For the length of the arc of the mean circumference occupied by each directing vane or guide we shall have $l = \dfrac{a + {\cdot}4 \text{ in.}}{\text{sin. } 25°} = \dfrac{2{\cdot}4 \text{ in.} + {\cdot}4 \text{ in.}}{{\cdot}423} = 6{\cdot}62$ in.; and from this $\mathrm{R} = \dfrac{28 \times 6{\cdot}62}{6{\cdot}28} = 2{\cdot}46$ ft. The number of the buckets of the wheel will be $n' = 2\,n = 56$, and their shortest distance on the lower side $a' = \dfrac{a}{2} = 1{\cdot}2$ in., with a length $e' = 1{\cdot}1\,e = 1{\cdot}1 \times 7{\cdot}2 = 7{\cdot}9$ in. The exterior radius of the directing vanes and of the upper side of the wheel will be $29{\cdot}5 + \dfrac{7{\cdot}2}{2} = 33{\cdot}1$ in. The velocity V of the mean circumference in feet a second will be $\mathrm{V} = {\cdot}6\sqrt{2\,g\,\mathrm{H}} = {\cdot}6\sqrt{64{\cdot}4 \times 10} = 15{\cdot}23$ ft.; and the number of revolutions made by the turbine in one minute will be $\mathrm{N} = \dfrac{60\,\mathrm{V}}{6{\cdot}28\,\mathrm{R}} = \dfrac{60 \times 15{\cdot}23}{6{\cdot}28 \times 2{\cdot}46} = 59{\cdot}15$.

To determine the dimensions of the inner wheel, when the height of the fall is reduced to 7 ft., it must be borne in mind that the quantity of water passing through the outer wheel being $\mathrm{Q} = {\cdot}68 \times 28 \times {\cdot}2 \times {\cdot}6\sqrt{64{\cdot}4 \times 7} = 48{\cdot}62$ cub. ft., the volume received by the inner wheel will be 85 cub. ft. − 48 cub. ft. = 36·38 cub. ft. Making $a = 2{\cdot}4$ in., $e = 4\,a = 9{\cdot}6$ in.; then $n\,a\,e\,\dfrac{36{\cdot}38}{{\cdot}68\sqrt{64{\cdot}4 \times 7}} = 2{\cdot}5$ sq. ft., and we shall have $n = \dfrac{2{\cdot}5 \text{ sq. ft.}}{{\cdot}2 \text{ ft.} \times {\cdot}8 \text{ ft.}} = 15{\cdot}6$; and taking the nearest whole number $n = 16$; $l = \dfrac{a + {\cdot}4 \text{ in.}}{\text{sin. } 25°} = \dfrac{2{\cdot}4 \text{ in.} + {\cdot}4 \text{ in.}}{{\cdot}423} = 6{\cdot}62$ in.; and $\mathrm{R} = \dfrac{16 \times 6{\cdot}62}{6{\cdot}28} = 1{\cdot}4$ ft.

The velocity of this wheel may be varied within certain limits on either side of that corresponding to the maximum effect, without the proportion of the useful to the absolute work diminishing in any marked degree. The maximum force which this wheel can exert rises to 1·48 times that corresponding to the maximum effect for the same openings of the guides. The employment of a double system of guides and buckets renders this wheel particularly suitable for situations where the volume of water is very variable, as it provides for the discharge of large quantities in times of floods, without any resulting inconveniences when the supply is small. The improvement of

substituting for the vertical rods a flexible band which permits the entire opening of any number of guides while the others remain closed, does away with the disadvantage of partial openings and renders the action of the wheel more uniform under all conditions of water. The erection of this wheel does not present any great difficulties, and requires few hydraulic constructions. The pivots being placed above their water, can at any time be examined and oiled with little trouble. A governor may be used, provided that the guides are not entirely opened. This may therefore be classed as one of the best forms of turbine.

Leffel's Double Turbine.—This wheel, which has been largely introduced in America, there being at the present time, 1874, upwards of 6000 in operation, possesses several peculiarities of construction, and the inventor claims for it great advantages over every other kind of water-wheel. It differs from the double turbine already described in having its two series of buckets situate one over the other, and in each set being constructed on a separate principle: the upper set being simple radii discharging their water centrally, the lower set curved and discharging from their lower side. The water is directed upon both sets at the circumference by means of movable guides.

The peculiarities of its construction will be understood by a reference to the figures. Fig. 7238 is an elevation of the wheel ready for fixing, showing guide-rods, guides, and outer casing;

7238.

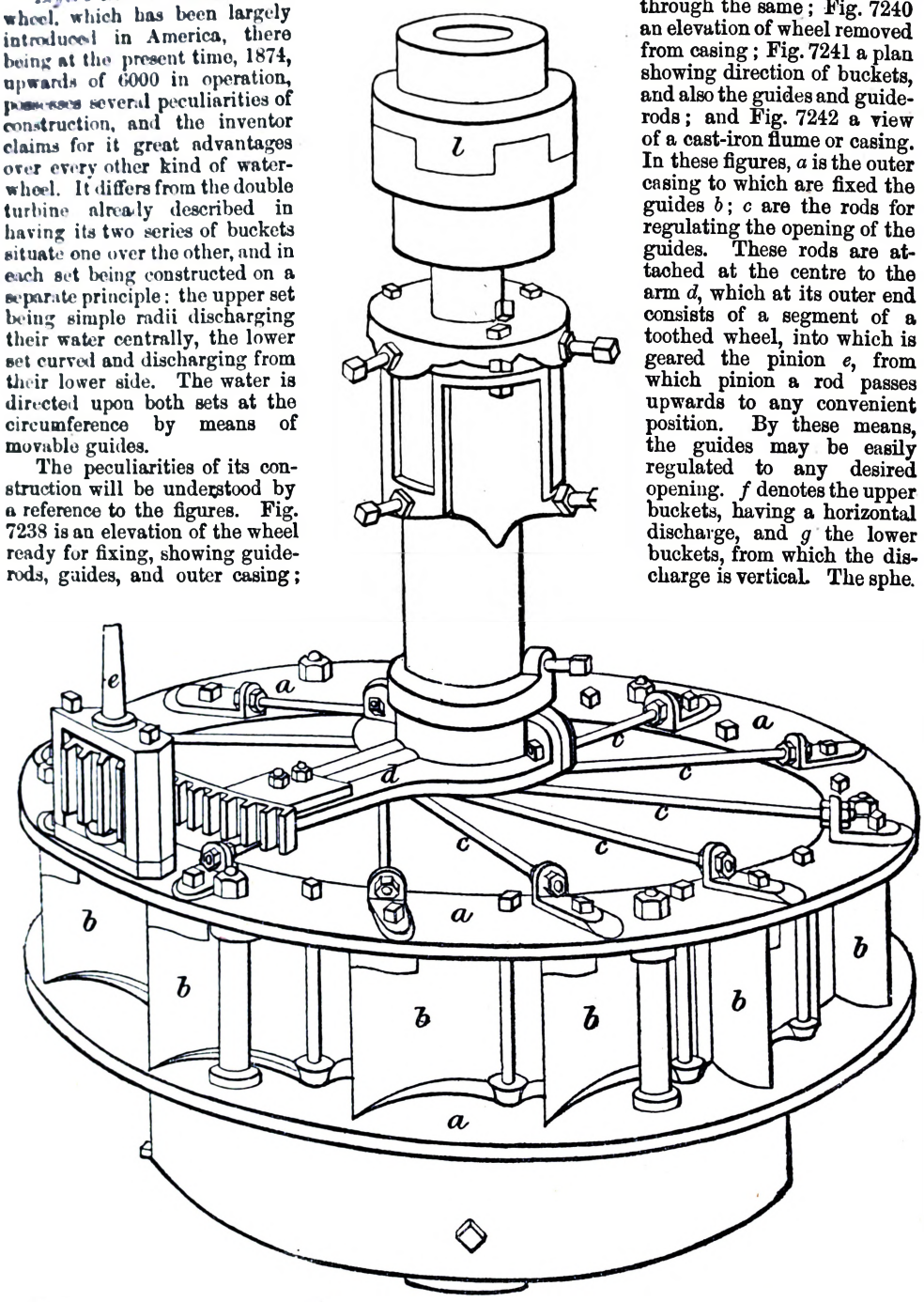

Fig. 7239 is a vertical section through the same; Fig. 7240 an elevation of wheel removed from casing; Fig. 7241 a plan showing direction of buckets, and also the guides and guide-rods; and Fig. 7242 a view of a cast-iron flume or casing. In these figures, *a* is the outer casing to which are fixed the guides *b*; *c* are the rods for regulating the opening of the guides. These rods are attached at the centre to the arm *d*, which at its outer end consists of a segment of a toothed wheel, into which is geared the pinion *e*, from which pinion a rod passes upwards to any convenient position. By these means, the guides may be easily regulated to any desired opening. *f* denotes the upper buckets, having a horizontal discharge, and *g* the lower buckets, from which the discharge is vertical. The sphe.

rical iron flume or penstock, Fig. 7242, is cast in two portions, and firmly bolted together so as to be perfectly air and water tight; it is furnished with a movable cap or cover *h* sufficiently large to allow of the wheel being removed bodily if from any cause such an operation should become necessary. In the cap is a hand-hole *i*, and in the sides, two large man-holes *k*, by means of which the wheel can at any time be examined, and any dirt or rubbish, which from carelessness or other cause has got there, may be removed. At the side is a short pipe having a flange by which it is joined

to the supply pipe or wooden penstock, and at the bottom is another short pipe through which the water makes its escape after being discharged from the wheel; the lower end of this pipe should be

7239.

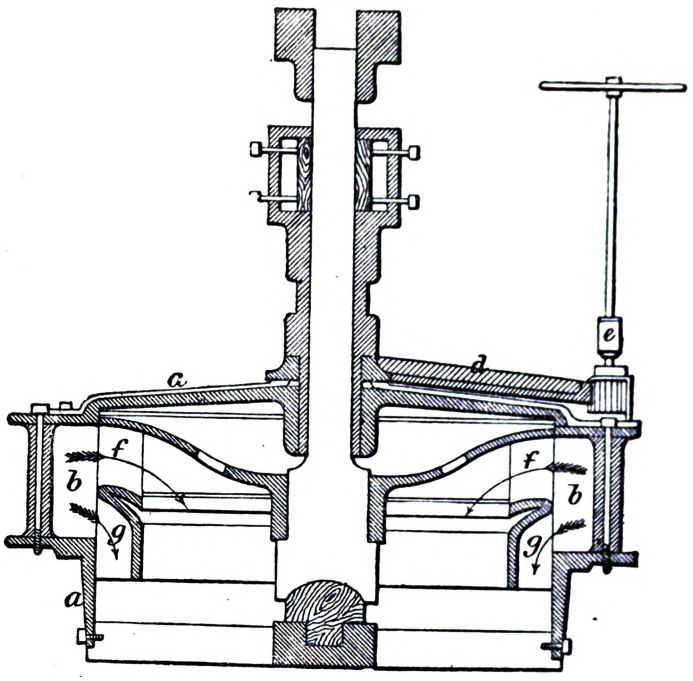

7240.

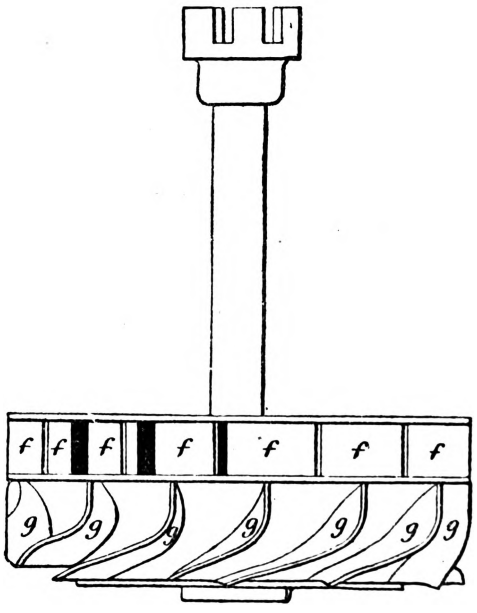

7241.

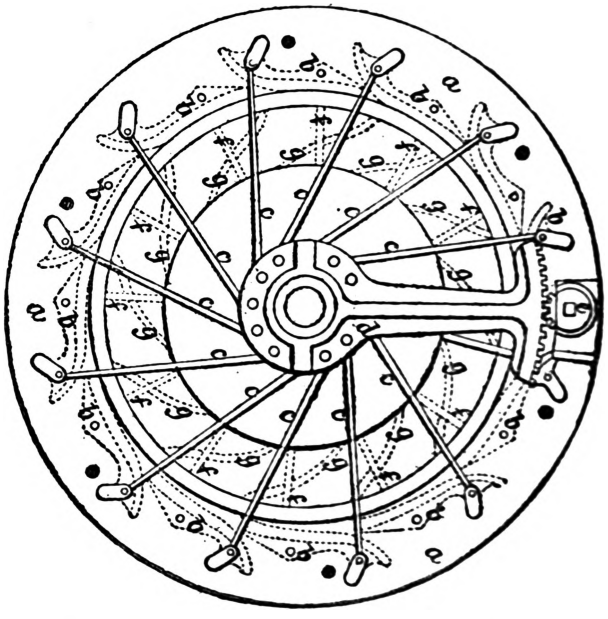

placed about 1 in. below the surface of the standing tail-water. To the top of the cover *h* is firmly bolted a bridge-tree for the support of the upper end of the water-wheel shaft, to which is attached a clutch coupling *l*. The water-wheel shaft and the guide-rod both pass through water-tight stuffing boxes.

The advantages claimed for this wheel are, that by the use of two sets of buckets, each having an independent discharge, provision is made for the maximum discharge of water with the minimum of friction, and that therefore the percentage of work will greatly exceed that obtained from any other wheel. It would appear, however, that the principal use of the upper buckets will be to provide an easy outlet for a large body of water without in any way extracting from it a due proportion of work. The makers lay great stress upon the amount of care which is bestowed upon the manufacture of these wheels, and the high finish which is given them. These, of course, are conditions

which would greatly improve the action of any wheel, and it may be that the esteem in which the Leffel wheel is held is due rather to these conditions than to any special advantage afforded by the peculiar arrangement of the buckets.

A turbine, on the Herschel-Jonval system, was erected in 1867 for the Kränholm-Manufactur-Narva, near St. Petersburg. The height of fall in this case is 25 ft.; the quantity of water passing in one second, 570 cub. ft., and the speed fifty revolutions a minute. The efficiency of this turbine is stated to be 70 per cent., the effective work done being equal to nearly 1200 horse-power. The wheel is 12 ft. 1½ in. in diameter, and the buckets are made of wrought-iron plate cast into the wheel, and surrounded by a wrought-iron ring. The buckets of the guide-wheel are also of wrought iron, but the encircling ring is of cast iron. The casing of the turbine is 12 ft. 11 in. in diameter, and it consists of five rings, each made in two parts, the second ring carrying the bearing for the axis of the turbine, whilst the lower ring is supported by eight buckets surrounded by an annular sluice. This sluice is counterbalanced, and can be raised by suitable hand-gear; while a main sluice valve is also provided for entirely shutting off the water if required. Two horizontal tubes placed through the casing of the turbine act as supports for the footstep bearing of the turbine shaft, and allow of the lubrication of this bearing by an oil tube. They are also of such size that access to the bearing may be had through them. The height from the bottom ring to the top of the turbine shaft is

7242.

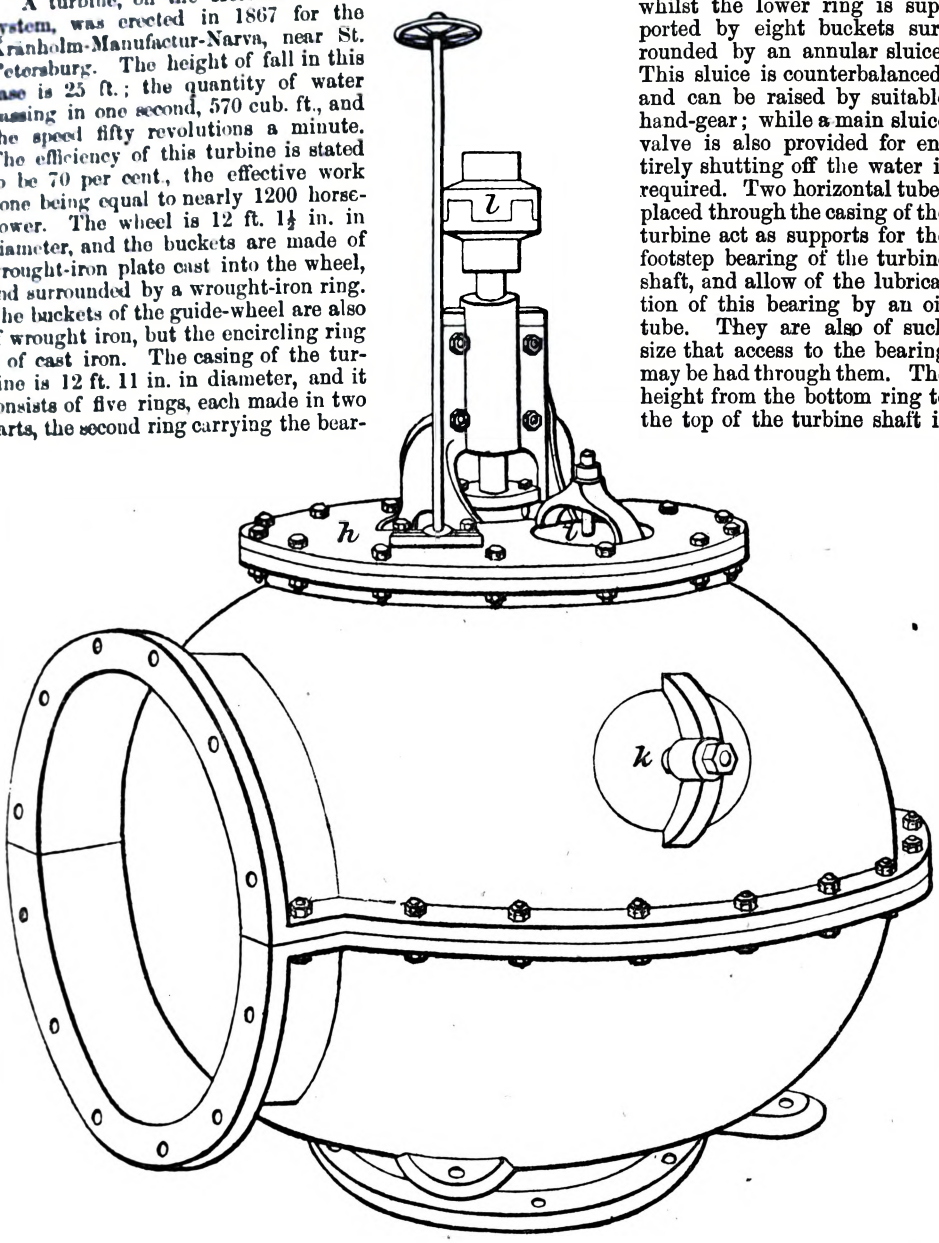

38 ft.; the latter is of wrought iron and is 1 ft. 3¾ in. in diameter. The bevel-wheels by which the motion is taken off, are 12 ft. in diameter, and each is made in two parts bolted together. The total weight of the turbine is 14 tons. The works which this turbine assists in driving comprise a cotton mill, with 239,692 spindles, and weaving sheds containing 1647 looms. It was constructed by the Maschinenfabrik-Augsburg, of Augsburg, Bavaria.

TURN-TABLE. Fr., *Plaque tournante;* Ger., *Drehscheibe;* Ital., *Piattaforma girante;* Span., *Plataforma.*

See Permanent Way. Railway Engineering.

TUYERE. Fr., *Tuyère;* Ger., *Form;* Ital., *Foro del vento;* Span., *Tobera.*

See Blast Furnace. Iron.

UNDERSHOT-WHEEL. Fr., *Roue en dessous;* Ger., *Unterschlächtiges Wasserrad;* Ital., *Ruota a palette di sotto;* Span., *Rueda de paletas.*

See Float Water-wheel. Hydraulic Machines, Varieties of.

UNIVERSAL JOINT. Fr., *Joint universel;* Ger., *Universalgelenk;* Ital., *Snodo universale;* Span., *Junta universal.*

See Joints.

VELOCITY. Fr., *Vitesse;* Ger., *Geschwindigkeit;* Ital., *Velocità;* Span., *Velocidad.*

The speed with which a body is moving is termed its velocity. If the body moves uniformly, this may evidently be measured by the quotient of the space divided by the time. Thus the velocity 30 miles an hour would be represented by 30 if the units be miles and hours. When the movement is not uniform, the velocity is measured by the space described in an infinitely small time, divided by the time. Thus $\frac{ds}{dt}$ is the measure of velocity. See Angular Motion.

VENTILATION. Fr., *Aérage;* Ger., *Luftwechsel;* Ital., *Ventilazione;* Span., *Ventilacion.*

Ventilating and Warming.—As ventilating and warming are kindred subjects, intimately connected in practice, we have preferred to include them in one article; but for greater clearness and simplicity we shall investigate the questions relating to each separately.

Ventilation consists in the removal of all vitiated air from an apartment and in the replacing of it by an equal quantity of pure air. To appreciate fully the necessity of this operation, it is requisite to understand the composition of atmospheric air and the causes of its vitiation.

Atmospheric air, in its normal or pure state, is composed of oxygen and nitrogen in the proportion of 21 to 79; it also contains a few thousandth parts of carbonic acid, a variable quantity of vapour of water, and a little carburetted hydrogen. Schœnbein, of Basle, in 1840, and more recently Houzeau, of Rouen, have proved that the atmosphere contains ozone also, in the very small proportion of $\frac{1}{140000}$ it is true, but varying according to situation. Thus in large cities it disappears altogether; while its presence is very appreciable in the country, especially on the tops of hills and in the depths of forests. No doubt this is one of the chief causes of the salubrity of country air. It has been remarked that when the wind blows from the south-west, the air contains its maximum quantity of ozone, and that at such times the mortality is low. Many careful and delicate observations have yet to be made to complete our knowledge of this agent; but enough has been learned respecting it to show that it plays an important part in preventing and arresting the progress of fermentation, and consequently in promoting the salubrity of the atmosphere. Agricultural chemistry teaches us that the atmosphere always contains a variable quantity of nitrates and ammonia generated by the incessant decomposition of organized bodies. It is by bringing down these substances that rain fertilizes fallow ground, and in one manner acts beneficially on vegetation. The quantity is largest in the neighbourhood of large towns, where it is probably in excess. But as they exist everywhere in a greater or less proportion, we must consider these bodies as constituent parts of a pure atmosphere. It is only in recent years that the intimate composition of air and its actual influence upon health have been made subjects of careful investigation. Formerly it was deemed sufficient to consider it merely in relation to its temperature. This was one of the greatest errors committed in the matter of ventilation, and it is too often fallen into even in the present day.

Such is the atmosphere in its pure state. It is rare, however, that we find it free from polluting matters. When a ray of sunlight falls into a darkened room, it reveals to our sight myriads of vegetable and animal molecules which, under ordinary conditions, are invisible. These molecules are derived from the friction of bodies, the emanations caused by the progress of vegetation in plants, the respiration and transpiration of animals, and the combustion of vegetable, animal, and mineral substances. The air contains also the products of fermentation and effluvia of various kinds. When the air of towns, or even that of the open country, is analyzed, we find that it holds in suspension matters derived, not only from the soil, from animals and plants, but also from the surface of the sea, which matters are carried by the wind to very great distances. These myriads of microscopic germs play an immensely important part in the organized world. They are the agents of corruption, the sinister authors of disease, continually on the watch for an opportunity to insinuate themselves into the human organism to deposit their deadly poison. The researches of chemists and physicians, especially those of Faraday, have shown almost demonstratively that the worst epidemic diseases are due to these causes. Such facts are of themselves sufficient to render abundantly evident the necessity of providing our dwellings, and above all our hospitals, with an ample supply of pure air by means of a system of ventilation. But there are other causes of vitiation that are also of grave importance.

It has been ascertained that the average quantity of air inhaled by a person sitting still, or moving gently about a room, is 600 cub. in. a minute. This air, when expired, differs in several respects from what it was when inspired. Whatever its temperature may have been previous to inspiration, on quitting the lungs it has about the same temperature as the blood, that is, about 90° Fahr. Thus it is not surprising that several persons together in a room, in which the ventilation is deficient, speedily raise the temperature of the atmosphere in it, seeing that each pours into the limited atmosphere of the room 600 cub. in. of air at 90° every minute, irrespective of the heat which is given off his body by radiation. Also whatever degree of dryness the air may possess previous to inspiration, after expiration it is saturated with vapour of water. Nor are these the only changes that the air undergoes during its passage through the lungs. Another and a very important one is that a quantity of its oxygen, equal to 5 per cent., is absorbed, and its place supplied by an equal quantity of carbonic acid. Thus, a man in an air-tight room having the form of a cube of 6 ft. side will, in the course of twenty-four hours, have passed every particle of the air in it through his lungs, raised the temperature of the air to that of his own body, neglecting the quantity of heat abstracted by the walls, and seriously changed its composition by absorbing oxygen and substituting carbonic acid. The quantity of water which he will throw upon the atmosphere in the form of vapour will vary greatly according to the individual and the season.

The composition of the air is also changed by the combustion of lights, which also deprives the air of a portion of its oxygen and disengages carbonic acid; at the same time the solid products of combustion are thrown upon the air.

The preceding causes of vitiation may be described as internal, since they operate within the building to be ventilated. But we have in addition to these, external causes of vitiation, or causes

that operate out of doors, and which must always be taken into account in designing a system of ventilation, a necessity that is too frequently forgotten. The chief of these causes are the gaseous and solid products of combustion discharged from the chimneys of dwelling-houses and factories; the decomposition of animal matter; the decomposition and fermentation of vegetable matter in the fields and in the markets, streets, and back yards of towns; the gases and miasmata, due to the same source, which are discharged from sewers, and, of course, the internal causes which we have already described, and which are carried out into the external atmosphere. Against all these vitiating causes, nature has provided an efficient remedy in the absorption of the polluting matters by the vegetables, the health of which they tend to promote. Consequently, in the open country, unless the source of pollution be situate very near the dwelling, the external vitiation of the atmosphere may be safely neglected. But in towns, and especially in large towns, where these causes are multiplied and intensified, and where the absence of vegetation lessens the remedial influences provided in nature, it becomes a matter of serious importance, and one that must be carefully considered when estimating the quantity of air requisite for ventilative purposes. Hitherto this subject has been strangely neglected; in no work treating on ventilation that we are acquainted with, is it even mentioned. A certain number of cubic feet a minute for each person has been considered necessary both by writers and government commissioners, quite irrespective of locality. That such an opinion is altogether erroneous, the facts described above sufficiently show.

The causes of a vitiated atmosphere are so numerous, and many of them are so potent, that the necessity of a constant renewal of the air of an apartment is one of primary importance to health. This is especially the case in public buildings, where large masses of persons congregate, and in hospitals, in which the causes of vitiation are enormously intensified. But we need not enlarge upon a necessity the gravity of which is so obvious, and which is now generally recognized.

The modes of renewing the air of an apartment are few and simple. Heated air, as is well known, has a tendency to ascend. Advantage is taken of this fact to allow the heated and vitiated air to escape, its place being supplied by the denser external air. This may be described as the natural mode of ventilation, and is in general the most effective. Another mode is to exhaust the air from the apartment by means of a fan. This has been successfully applied to certain classes of public buildings; but it is not generally suitable. Simple as these means are, however, the application of them presents great, and in some cases insurmountable, difficulties. If it were merely a question of extracting the vitiated air and supplying its place with pure air, few things could be more easily effected. But the operation has to be performed without occasioning a perceptible draught, as the latter is as much to be dreaded as the foul air, and herein lies the problem. This problem evidently admits of only one solution, namely, by admitting the air through a passage having a widely-extended area, and situate at a considerable distance from the persons in the room. The best way of effecting this is to admit the cold air through a number of minute holes spread over a large space in or near the ceiling. A channel, for example, in communication with the outer air, is provided behind the cornice, and the air is allowed to enter the room through holes, or through long narrow openings covered with perforated zinc. When these conditions are properly complied with, the air can be admitted with a low velocity, and at such a distance above the persons in the room that no draught is felt. But in the fulfilment of these conditions, many difficulties, architectural and others, are met with. The former may be overcome; the latter are in many cases insurmountable. What these difficulties are we shall see when describing the various systems of ventilation. Two things may be mentioned here as militating seriously against every system, namely, the imperfection of structures, which allows the cold air to enter through the doors, windows, and crevices, thereby causing unpleasant draughts, and the necessary opening and shutting of doors, whereby the temperature of the room is suddenly lowered, and the direction of the currents changed. To remedy the latter evil, it has been proposed to construct double doors, similar to those used for the same purpose in mines; but though the plan fully answers the purpose intended, it has been found to be impracticable.

With respect to the position of the inlet and outlet apertures, there has been much controversy. Until recently it has been taken as a matter of course, that because heated air has a tendency to ascend, the aperture for its escape should be near the ceiling, and that the admission of the cold air should, on the contrary, be near the floor. This principle has been generally adopted in practice, with the disagreeable consequence of a cold draught along the floor. This notion respecting the ventilating currents is evidently due to a misconception concerning the motion of the heated air. The latter has of itself no tendency to ascend; but it rises because, having increased in volume under the expanding influence of heat, it is pushed up by the denser surrounding air. Now it is obvious that the denser fluid will exert the same force upon the less dense wherever its inlet aperture may be situate. Consequently, a better position for this aperture is near the ceiling, because, when so situate, the incoming air gets diffused in the atmosphere of the room before reaching the persons in it. It is also equally obvious, that the heated air will be forced as freely out at the bottom of the room as at the top, if we only provide that it shall escape into the atmosphere at a height not below that at which the cold air enters. Such a situation is therefore the best for the aperture of discharge; because when so placed, the air near the floor, which is always more or less cooled by currents entering beneath the doors, is kept at an agreeable temperature. Besides this, the heavy matters, such as carbonic acid gas, and the solid molecules floating in the atmosphere, are more readily and effectually swept away. This principle of ventilation, which rests upon indisputable facts, is being gradually substituted for the old and erroneous one still in very common use.

The quantity of air that should be passed through a room in a given time in order to keep the atmosphere in it in a proper state of purity is a question of primary importance. Authorities are not agreed on this matter. Thus Peclet, calculating from the quantity of carbonic acid produced, says 5 cub. ft. a minute of fresh air should be allowed for each person. Reid, calculating

from the quantity of fresh air required to carry off all the contaminations resulting from human life, says 10 cub. ft. The government commissioners say from 10 to 20; Morin, 15 to 20, and Arnott and Roscoe, 20. The quantity of air actually inhaled by a person when sitting still, or moving gently about a room, is about half a cubic foot a minute. The miasmata or effluvia derived from the various secretions of the body, which, as we have already said, constitute the most potent and dangerous cause of vitiation in the atmosphere, will require, say 1 cub. ft. a minute, for we can estimate this vitiating cause only approximatively. This allows a film or covering of air $\frac{1}{4}$ in. thick over his whole body, which film is changed every minute. But when undergoing moderate physical exertion, or when heated by crowding in a public room, the quantity of air breathed is nearly 1 cub. ft. a minute; and as the poisonous emanations from the body are increased in a like degree, we may assume that 3 cub. ft. a minute is the minimum quantity of fresh air requisite for each person. This minimum quantity is, however, calculated on the assumption that at the expiration of the minute the air fouled during that time is instantly and completely removed from the room. Such is far from being the case, and to take this fact into account, we must double the quantity previously found. Moreover, it will be necessary to provide a sufficient margin to allow for interruption of the ventilation and unforeseen contingencies. The factor of safety to give this margin should not be less than 2. This gives us as the requisite quantity of fresh air for each person 12 cub. ft. a minute. We have already explained that the atmosphere of towns is less pure than that of the open country; this fact must be taken into account when estimating the requisite quantity of air, for when the fresh air is itself vitiated, a larger quantity must be passed through the room. Therefore, in calculating the ventilation, 12 cub. ft. a minute for each person should be allowed in the open country, 15 cub. ft. in small towns, and 18 cub. ft. in large towns.

A candle or small lamp heats the air and fouls it with the products of combustion to a degree requiring 1 cub. ft. a minute, and an ordinary full-size gas-burner eight times as much. According to the Blue Book, an ordinary open fire-place requires about 1000 cub. ft. of fresh air a minute. All of these causes of vitiation must be duly allowed for in calculating an adequate ventilation. To illustrate the application of these principles, suppose we have to ventilate a private room, say a dining-room, calculated to accommodate fifteen persons, and having four gaslights and one fire. The quantity of air necessary to keep the atmosphere of this room in the requisite state of purity, will be for the country $(12 \times 15) + (8 \times 4) + 1000 = 1212$ cub. ft. a minute; for the small town $(15 \times 15) + (8 \times 4) + 1000 = 1257$; and for the large town $(18 \times 15) + (8 \times 4) + 1000 = 1302$ cub. ft. a minute. As the fresh air entering should never have a velocity greater than 3 ft. a second, the total area of the orifices through which it is admitted will in this case be 6·75, 7, and 7·25 sq. ft. respectively. The velocity of the air in the channels leading to these orifices may, of course, be much greater than 3 ft. a second; but it should be kept down to the lowest possible limit. If these dimensions be given to the inlet apertures, very little cold air will force itself in through the doors and windows; and if the apertures be situate near the ceiling and widely distributed, no draught will be felt in any part of the room.

No system of ventilation can be considered perfect that allows the fresh air to enter at the same temperature as that of the external air, and experience has shown that no such system can be successful even in effecting an adequate ventilation by reason of the opposition it meets with. In our climate the outside air is too cold during seven months of the year to admit of its being introduced directly into our apartments. The dangers of the cold current are as great as those of imperfect ventilation; for while the latter brings fevers, cholera, and diseases of a similar character, the former brings colds, rheumatism, bronchitis, and consumption. For this reason, as well as from the discomfort which cold draughts occasion, it has been found that when the incoming air is not previously warmed, the apertures are speedily closed up, the occupants of the apartment preferring stuffiness to cold. This condition of warming the air previous to admission greatly complicates the problem of ventilation, but it must be considered as essential to any system.

One effect of heat upon air is to raise its point of saturation. One cubic foot of air, say at 32°, is capable of containing a certain quantity of moisture, and no more. But if we raise its temperature to 80°, which is near that of the human body, it is capable of containing five times as much, and consequently it absorbs moisture from everything that contains any. This heating of the air does not dry it in the sense of extracting moisture from it; it only increases its capacity of containing water, thereby rendering it more absorbent or thirsty. Air suddenly heated is thus rendered unwholesomely dry, and this is an important point in regard to the subject of warming, requiring careful consideration. Whenever the fresh air is warmed before being admitted into a room, an evaporating pan, or some other means, must be provided to supply the air with the necessary degree of moisture.

We shall now consider the various modes of applying the foregoing principles to the ventilation of different classes of buildings.

The atmosphere of a room may be renewed by one of three means, or by a combination of any two of them; fire suction, that is, by placing the room in communication with a flue, at the bottom of which a fire is kept constantly burning; mechanical suction, which is produced by means of a fan placed at the outlet; and propulsion, which is effected by means of a fan or pump placed in communication with the inlet. Each of these means possesses advantages that render it suitable according to the character of the building and the object sought.

The advantages of fire suction are, that it is the most simple and natural mode of ventilation; it does not require, as the other systems do, the attention of special attendants; it extracts the vitiated air directly from the point where it is produced; and it is the most economical, since in no case can the cost exceed that of the fuel consumed, and in most cases this can be reduced to a very small quantity by utilizing the heat of the ordinary fires. On the other hand, it has been urged against this mode of ventilation, that it interferes with the draught of the chimneys, draws into the room the smells from the kitchen and other offices, mingles the emanations of the patients in hospitals, and necessitates flues of large dimensions. Most of these disadvantages, however, are due

rather to a defective arrangement than to the nature of the system itself, and might be obviated by greater attention to details.

For the mode of ventilation by injection, it is claimed that the quality and quantity of the air admitted may be better regulated, that it may be directed to the spot required, that the risk of fire is lessened, and that the cost of tall up-cast shafts is saved. Evidently the advantages of both modes are considerable, and neither can be condemned as absolutely inferior to the other. Fire suction is far more generally applicable than any mechanical contrivance; but the latter may, in some cases, be far more effective. Circumstances will always determine the choice.

The Ventilation of Hospitals.—The ventilation of hospitals is subject to conditions essentially different from those which have to be complied with in other public buildings. Here the causes of vitiation are more numerous and much more serious. The virulent effluvia rise to every part of the ward, insinuate themselves into every crevice of the ceiling or floor, and hang about the curtains and bedding. Thus it is necessary, not only that the ventilative current should be abundant and reach every portion of the apartment, but that it shall not carry the emanations from one patient to the next; in other words, the ventilation must be so carried out that each patient shall be freed from his own emanations and protected from those of his neighbour.

One method of fulfilling these conditions, which has been very successfully employed in the United States, is shown in Fig. 7243. In this method the fresh air is admitted to the patient through a long narrow aperture covered with a perforated plate, situate a little above his head, and

7243.

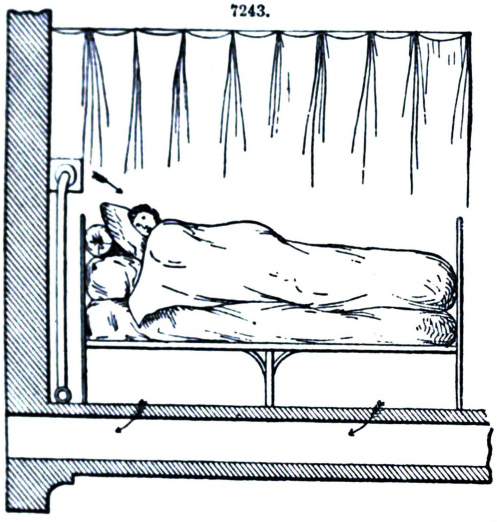

7243*.

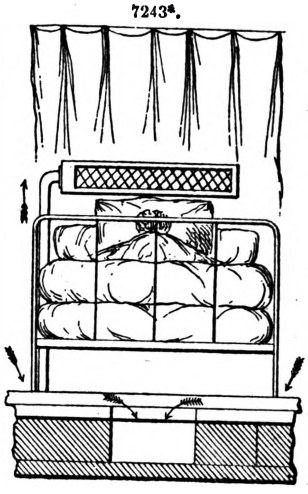

7244.

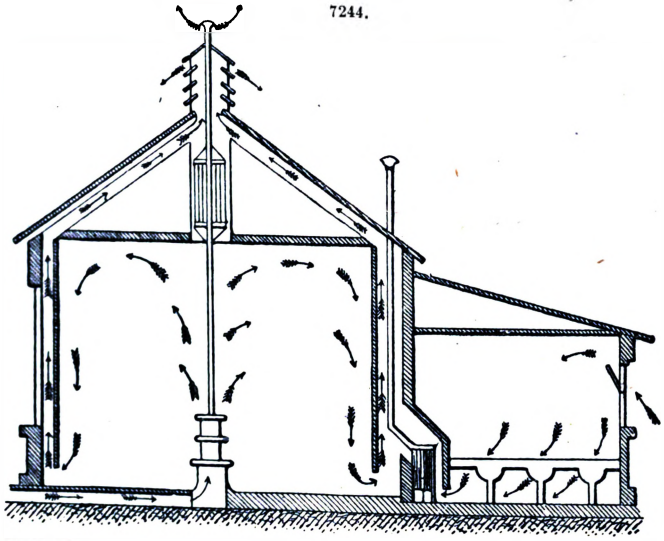

taken out beneath the bed through an aperture in communication with a suction-flue. This is one of the cases in which insufflation may be advantageously combined with suction. Fig. 7244 is another American example of hospital ventilation, very similar in general arrangement to that carried out in many European institutions. The fresh air, after being heated by a stove, first ascends to the ceiling, and is then drawn down to apertures near the floor by smoke-flues under the roof. The wards, in this case, are of one story only.

In the designing of a new building, care should be taken to provide for a thorough system of ventilation, the wholesomeness of the structure being of more importance than its artistic appear-

ance. In the case of a hospital, above all others, the laws of health should take precedence of the laws of beauty. If this necessity be borne in mind by the architect, there is not much difficulty in adopting the most suitable and efficient system. But in the case of old buildings the difficulty is much greater, and it often becomes necessary to modify a system in order to adapt it to the circumstances in which we find ourselves placed.

An arrangement generally applicable, with slight modifications, to existing buildings, is shown in the accompanying figures. Fig. 7245 is a cross-section of the building; Fig. 7246 a plan of the basement, and Fig. 7247 a plan of a floor. A heating apparatus A is placed in the basement in the centre of the building; fresh air is supplied to the apparatus through gratings at B, a hollow cover C, Fig. 7248, being provided to prevent waste of heat. The air enters this cover at the bottom,

7245.

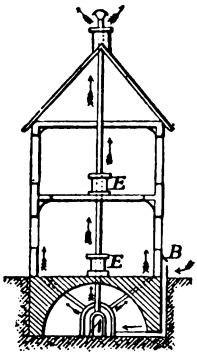

7246.

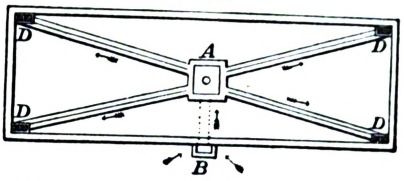

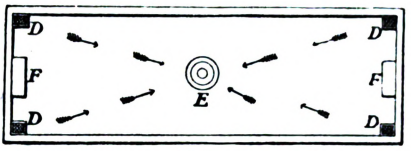

7247.

7248.

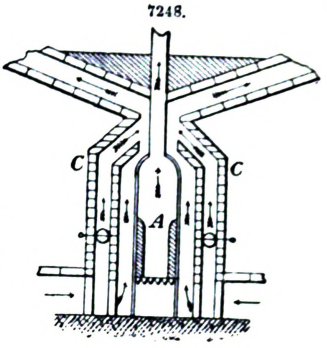

and its passage is regulated by a regulating disc. Four air passages or ducts from the upper angles convey the heated air to the corners D, where the circulation is usually very languid; it is then drawn to the middle of the apartment towards the smoke-flue E, where it is sucked downwards, so as to equalize the temperature. Fig. 7249 shows the stove placed in the middle of the apartment to draw away the vitiated air. The stove on the second floor, as well as its ventilating pipe, will necessarily be divided to keep the vitiated air of the two floors separate. Both the smoke and air flues are brought out at the top of the roof in the manner shown in Fig. 7250; this external portion may be either of galvanized iron, or if more ornament be desired, terra-cotta.

7249.

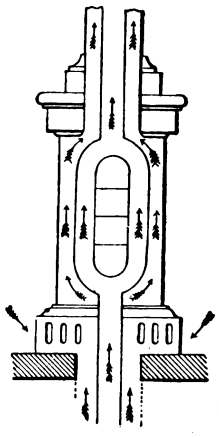

7250.

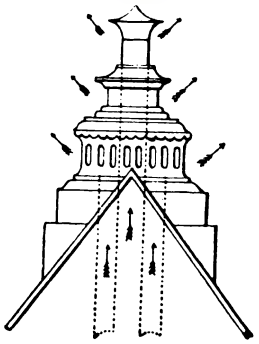

7251.

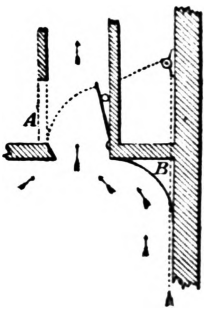

7252.

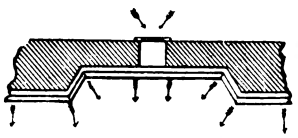

7253.

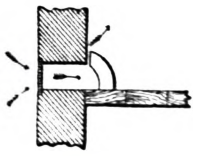

These arrangements are designed for warming and ventilating in winter. To render them perfect, there should be for the ventilation in summer two ventilating fire-places at the points F on each floor. Small trap openings should also be provided in the ceiling, capable of being opened and closed by a cord, and communicating with a flue, terminating above the roof, with a cowl to protect it from the rain and wind. Fig. 7251 shows the arrangement of one of such traps; a door or manhole A is provided to give access to the trap. The angles of the ceiling and walls should be rounded at B to prevent the accumulation of effluvia in those parts which are not swept by the ventilating current. A gas jet should be kept burning in the air-flue to promote the circulation. A common mode of admitting the air, adopted in some of the London hospitals, is shown in Figs. 7252, 7253. It consists of a kind of skirting, applied to the lower angles of the room, the air being

introduced behind the skirting, directly from the outside, and allowed to enter the room in the manner represented in the figures.

A modification of the plan of ventilating a hospital described above has been proposed by M. Joly, to whose excellent work we owe some of the illustrations given in this article. The arrangement is shown in Figs. 7254, 7255, in which the building is separated into two portions to isolate the sexes. Here the same system of warming and ventilating may be employed, whatever the number of separate wards may be. The heating apparatus is situate as before in a central part of the basement, and air-ducts convey the warm air to each apartment. The ducts are provided with regulators to cut off the current or to lessen it when the apartment is unoccupied. The air is admitted near the outer wall, and is allowed to escape through the bottom of the door, which is perforated for that purpose, the suction being effected in precisely the same way as already described. To this principal building will be joined the usual dependencies, as doctors' and nurses' room, bath-room and kitchen, the smoke-flues of which will be utilized to draw away downwards the effluvia from the water-closets.

7254.

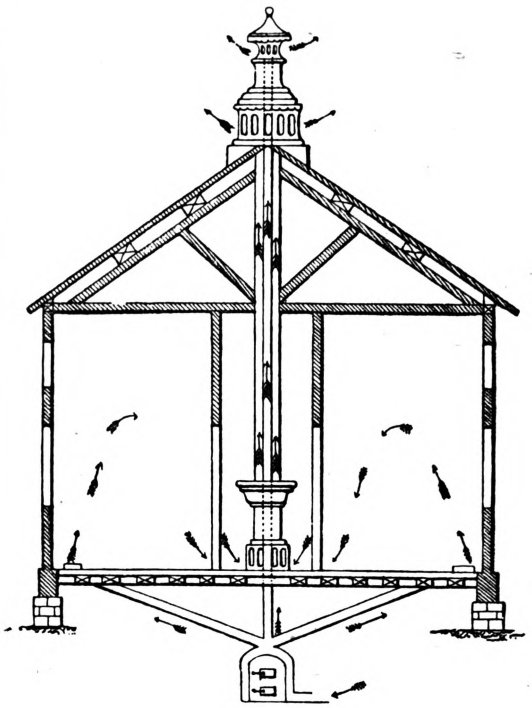

7255.

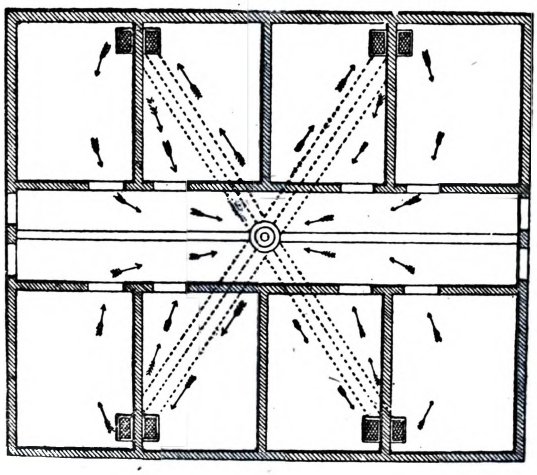

Three examples of London hospitals may be taken as illustrations of the most recent modes of ventilating these institutions,—the new infirmary of the Wandsworth and Clapham Union, Guy's Hospital, and St. Thomas's Hospital. The ventilation of the new infirmary is wholly natural, that is, no special fires nor mechanical means are employed. The ward which we shall take as an example of the whole is 123 ft. long, by 24·5 ft. broad, by 12 ft. high. Two upright chimney breasts, each having two open fire-places, one on each side in the length of the ward, stand out in the centre of the room, equidistant from the ends. A flue, in communication with the outer air, runs along beneath the floor and into a chamber at the back of the stove. The air thus introduced is admitted warm into the wards through the front and upper part of the stove. Immediately above these openings are others exactly similar, which also communicate with the air outside, but in a totally different direction. The smoke-flues are constructed on the principle of having at each angle of the circular flue a small air-flue, which in this case runs up to a chamber specially built in the roof, and enclosed on all sides by gratings of terra-cotta. By this means a constant down-draught of fresh air is obtained into the ward. In each pier between the windows is a Sheringham ventilator, communicating directly with the outer air, and regulated by lines, under the control of the nurses. To get rid of the heavy gases which are generated in disease, and which, if undisturbed, accumulate under the bed, an ordinary ventilator, opening directly into the outer air, is fixed under the head of each bed. By opening this for a few minutes at a time, the gases are quickly dispersed and carried off through the ordinary outlets for the foul air. In addition to all this, there are flues in the external walls running up to the roof and opening into the wards by self-acting valves. These flues are calculated at 1 in. of area for every 50 cub. ft. of air contained in the ward. They lead up into the open space within the roof, which is furnished with louvres at the ridge, through which the foul air finally escapes. This has been described as one of the most perfect of modern systems of ventilation. How far it is in accordance with the principles we laid down at the beginning of this article, our readers must be left to judge. We cannot refrain, however, from censuring the highly pernicious plan of allowing deadly gases to accumulate under the beds and then dispersing them among the patients by a set of ventilators specially provided for that purpose.

At Guy's Hospital the system adopted is more rational. Two lofty down-cast shafts, one on each side of the principal entrance, communicate with a chamber in the basement. An up-cast shaft for the discharge of the vitiated air and the smoke is placed near the centre of the building and at a

considerable distance from the down-casts. The height of this up-cast is also considerably greater than that of the others. The fresh air passes directly down into the basement, where it is heated by means of hot-water pipes. It then ascends through numerous flues in the brick piers in the centre of the wards. To admit it into the wards, the box girders that carry the floors are made use of, and the same means are employed to carry off the vitiated air. The mode of effecting this will be best seen by a reference to Figs. 7256, 7257. The upper flue is imbedded in the concrete of the floor, and admits the fresh air through gratings; the lower flue is below the ceiling of the ward, and receives through a number of circular openings the vitiated air of the ward below, which air is carried by a series of independent flues into a foul-air chamber, situate beneath the roof, from whence it is conveyed to the great up-cast. In a portion of the building erected a few years ago, the air is admitted at the ceiling and carried off through gratings near the floor at the head of each bed. In this respect the old is the better arrangement.

7256.

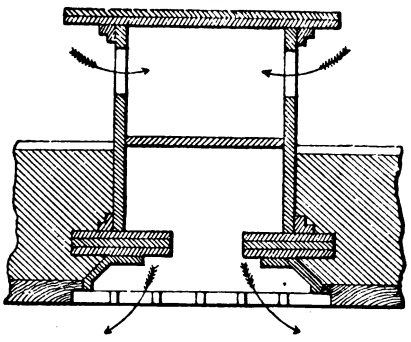

7257.

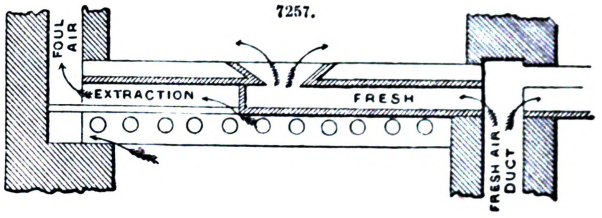

At St. Thomas's Hospital, which is the largest and the most recently erected of the London hospitals, the system of ventilation carried out partakes of the character of both the preceding. Taking a single ward as an example of the whole, we find three fire-places in the centre facing the end of the ward. An iron extraction-flue encloses the smoke-flue of each fire-place, the heat of the latter being thus rendered available in producing the suction. The vitiated air is taken into this up-cast flue through a grating at the level of the ceiling. As in the Wandsworth Infirmary, the fresh air is led in through a flue within the levels of the floor, which flue is in communication at one end with the external air, and at the other with a hot-air chamber behind the fire; in this way, it is warmed before being admitted into the ward. The building is divided into blocks, each floor of which constitutes a ward, with its necessary dependencies of lavatories, nurses' rooms, and kitchens. Each block is provided with its own set of hot-water apparatus, the furnace for which is situate in the basement story. The flue from this is carried up to the turret level in an iron tube forming the centre of an up-cast flue to the block. In addition to the open fires, there are on each floor two large coils of hot-water pipe, and to each coil fresh air is supplied by a separate air-duct running within the levels of the floor and communicating with the external air. At the ceiling and floor level there are gratings communicating with flues leading to the central up-cast connected with the smoke-flue of the hot-water apparatus in the basement. Thus we have as the means of introducing the fresh air to each ward, the flues communicating with the air-chambers behind the three stoves; and the flues communicating with the two hot-water coils. And as the means of extracting the vitiated air, we have the three up-casts surrounding the flues of the open fire-places and leading up to a chamber in the roof: and those connected with the larger up-cast enclosing the smoke-flue of the hot-water apparatus.

In the last two examples, the conditions of a good ventilation appear on the whole to be satisfactorily fulfilled. No doubt some of the details would admit of improvement, especially with regard to the precautions necessary to be taken to prevent the mingling of the emanations of different patients. But generally the arrangements are such as ought to give good results in maintaining the wholesomeness of the building.

The Ventilation of Schools.—Next to the ventilation of hospitals, that of schools demands the most careful attention. Here we have congregated together a large number of children in various states of health, and often in various conditions of cleanliness. The numerous and sudden ailments that children are liable to, and the heated state in which they usually arrive, render it doubly necessary that the ventilation of the schoolroom should be at all times ample and brisk, but free from cold draughts. The delicate organization of young children exposes them to great danger from the infections of vitiated air, and one means of lessening the difficulties of hospital ventilation is to diminish the number of patients by improving the ventilation of dwellings and schools. The most approved systems now in use are fairly illustrated by the following examples.

In the first example, which represents a system widely adopted on the Continent, we shall take one room as a specimen of the whole. The system, as shown in Figs. 7258, 7259, consists essentially of a heating apparatus, situate in the basement, when there is one, and in an adjoining room when there is no basement story; an air-chamber under the roof, and several extraction-flues beneath the floor leading to the smoke-flue of the heating apparatus. The fresh air, which is introduced at a point situate as far as possible from the top of the up-cast, passes round the stove, ascends vertically through a duct to the air-chamber in the roof, and is admitted to the room through the ceiling. To modify the temperature of the incoming air, a small quantity of cold air may be admitted to the air-chamber through an opening which in summer serves as the aperture

for the supply of fresh air, and which for this reason should be situate on the north side of the building and protected from the sun; at the same time it should be readily accessible. If the

7259.

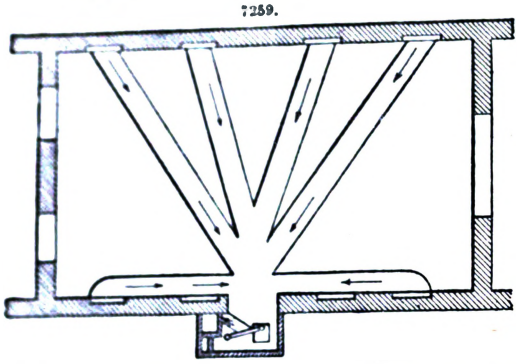

7258.

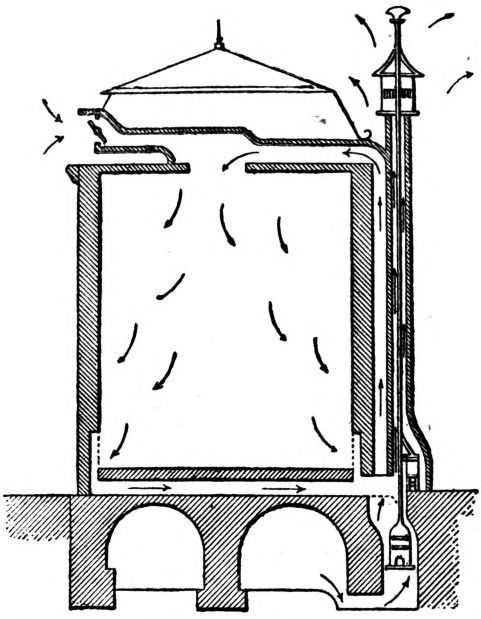

apertures for the admission of the air through the ceiling be sufficiently numerous and widely distributed, no draught will be felt. A small supplementary furnace in connection with the up-cast should be provided to assist the smoke-flue when a more powerful suction is rendered necessary. With a little care and attention on the part of the person in charge, this system works very satisfactorily. It is also a very economical one, a circumstance that has led to its adoption, with some modifications of detail, in many schools in the rural districts of the United States.

The accompanying Figs. 7260 to 7262 represent

7260.

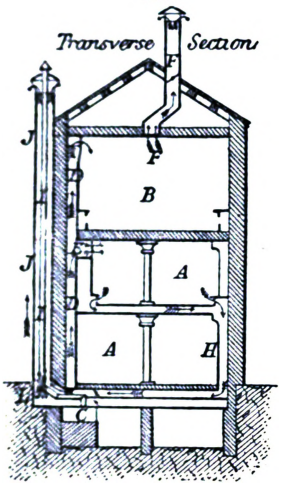

7261.

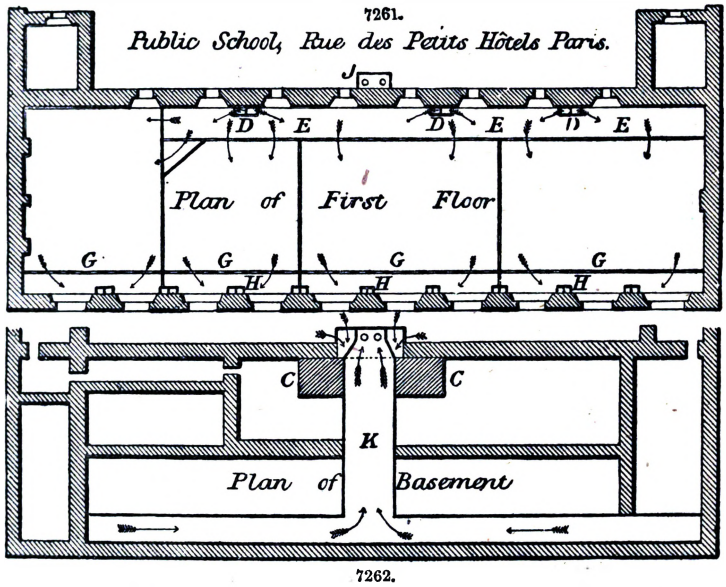

7262.

the public school in the Rue des Petits Hôtels, Paris, and the system of ventilation therein adopted, as described by Morin. The building contains an elementary school, A A, for 400 children, and a drawing school, B, for 270 pupils. The ventilation is at the rate of 350 cub. ft. an hour to each pupil, and the warming is effected by two heating stoves C, C, with vertical tubes. The warmed air is supplied to each story by three vertical channels D, which discharge into a long wide passage E, extending the whole length of the rooms; and into this passage external cold air can be admitted to regulate the temperature. The supply of air flows into the rooms horizontally near the ceilings, as shown by the arrows.

The rooms of the drawing school B are open at night, and offer special difficulties in ventilation, from the large number of gas-burners in use. The plan of abstracting the vitiated air close to the floor cannot be exclusively applied in this case, as it would cause the discomfort of pouring down air of 85° to 95° temperature upon the heads of the occupants. It is necessary, therefore, to allow the heated gases from the combustion of the lights to escape through the openings F in the ceiling, but at the same time, fresh air is made to enter at the sides near the ceiling. In such cases, when

the room has no attics above it through which the outlet openings in the ceilings can discharge, special flues are required to be made for this purpose, and these should be situate, as far as possible, from the points where the admission of fresh air takes place. By means of this plan of ventilation the temperature of the rooms has been maintained till 10 o'clock at night at 71°, at a height of 5 ft. above the floor, and at an average of 75° near the ceiling. But before this plan was adopted, these temperatures were 80° and 91° respectively.

The discharge openings should be made along both of the longer sides of the room, as at G G, Fig. 7261, and they should be as numerous as possible. Their total effective area should be such as to limit the velocity of the air passing through them to 2·3 ft. a second. They communicate with descending passages H, converging below into a main discharge passage K, leading to the bottom of the discharging shaft J. The chimney-pipes I, from the hot-air stove C, are made to pass up this shaft for the purpose of assisting the draught; but a small fire L at the bottom of the shaft is also requisite.

Figs. 7263, 7264, represent a plan and sectional elevation of a block of school buildings, and show a system of ventilation, due to Lewis W. Leeds, of New York, to which the premium was awarded at the Vienna Exhibition. Leeds' system is an attempt to imitate, and where possible to utilize, the means employed in nature to promote a circulation of the air. He observes that the sun, by heating the solid objects upon which his rays fall, causes a gentle and regular circulation of air along the surface of the ground. Reasoning from this fact, he concludes, that in a system of artificial ventilation the immediate object should be to warm the solid substances in a room, the ultimate object of warming the air being then attained in a natural manner by allowing the incoming

7263.

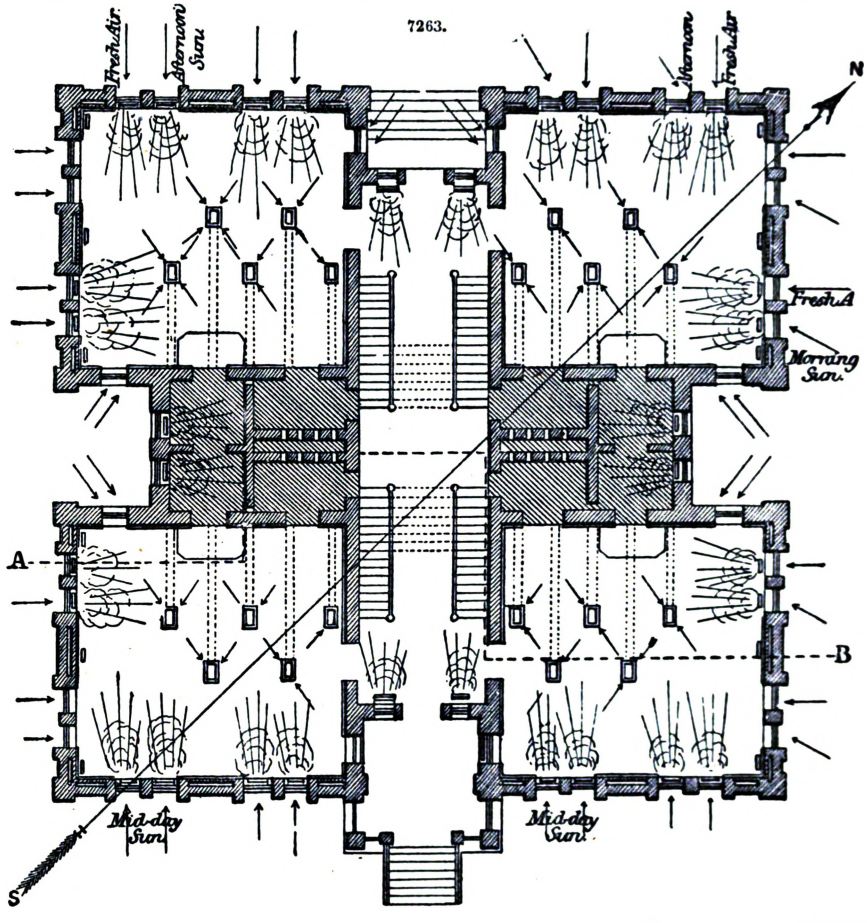

current to pass over these substances. To carry this conclusion into effect, he proposes to heat the floor and walls of a room, the requisite temperature being that which the summer sun shining on them would produce, that is, from 85° to 90° for the floor, and from 110° to 115° for the walls. To communicate and secure the necessary heat to the floor, Leeds carries off his vitiated air through numerous horizontal ducts running through it, and places at intervals in one of these ducts a steam-pipe, the tops of the joists being well cross-furred. To heat the walls, he constructs a wainscoting of iron, slate, or plaster upon iron laths, and places steam-pipes behind it in the manner shown in Fig. 7265. In addition to this, a steam radiator is placed under each window to correct the excess of cold at that point. Fresh air is admitted through the sill of each window and deflected upwards by the form of the opening. The air thus introduced mingles with the warm air ascending from the radiator, as shown in the drawings, which are exact reproductions, reduced, of the diagrams exhibited

at Vienna in 1873. The means provided for removing the vitiated air are two large up-cast shafts, centrally placed, as shown in the plan. The suction of these shafts is produced by carrying the

7264.

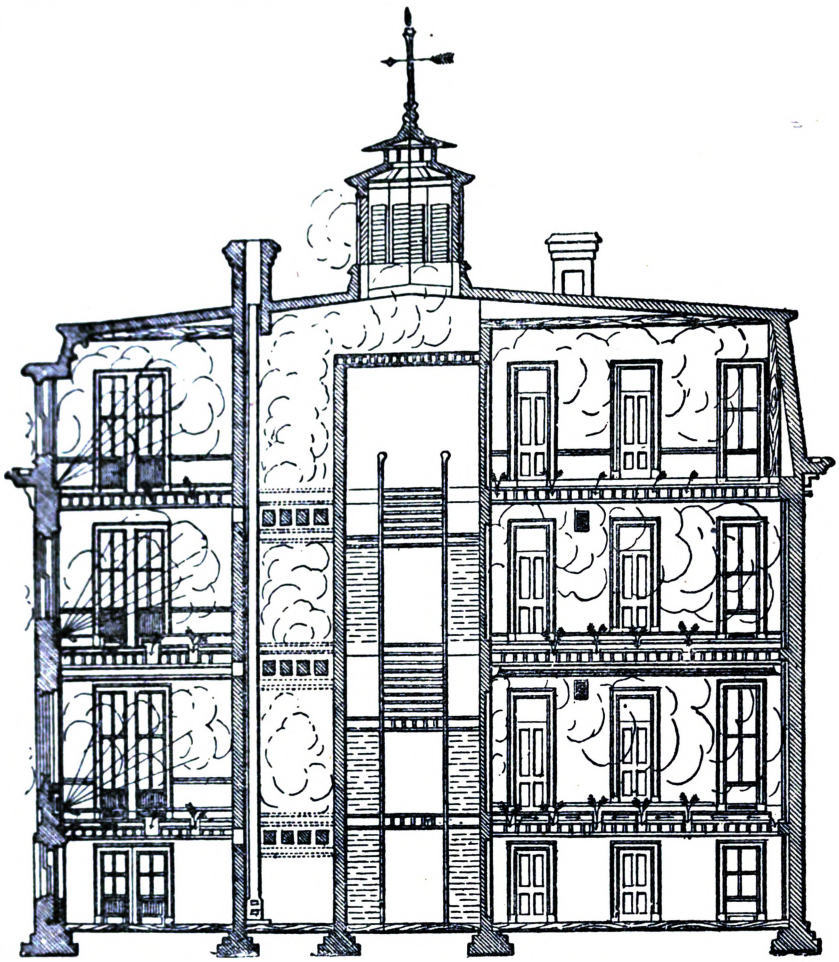

smoke-pipe of the heating apparatus up through them, and, when necessary, by a coil of steam-pipes or a stove placed in them for that purpose.

The advantages claimed for this system of schoolhouse ventilation are, a constant and uniform circulation in every part of the room, avoidance of draughts of cold air, a constant temperature that is practically independent of the opening and shutting of doors, and freedom from overdrying a portion of the air. No doubt these advantages are obtained; but the system does not appear to be applicable to existing buildings, nor to be economical in practice in any case. We ought to observe that Leeds proposes to utilize as much as possible the heat of the sun by placing his building so as to obtain the maximum amount of sunshine in the rooms.

7265.

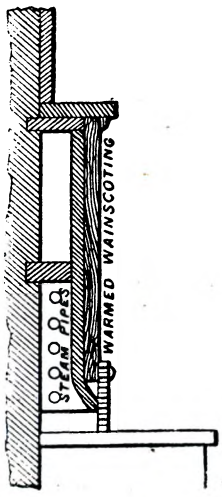

The Ventilation of Theatres and Public Rooms.—The ventilation of a theatre is one of the most difficult problems that the man of science is called upon to solve. A theatre consists not of a single apartment permanently enclosed, like other assembly rooms, or of several apartments permanently separated, as in hospitals, school, and other buildings, but of three large, open, and contiguous parts, the auditorium, the stage, and the corridors, all of which may at one moment be separated one from the other, and the next moment placed in communication one with the other by spacious openings. To this first difficulty must be added the influence of the gaslights, especially those near the roof, the position of the audience placed in rows one above the other, and not horizontally as in other places, and the continual changes that are taking place on the stage and among the audience. These difficulties have long occupied the attention of architects, and many plans have been proposed, some of which have given fairly satisfactory results; but a plan that shall give complete satisfaction has yet to be discovered. A description of the numerous attempts that have been made in this direction would extend beyond the limits of an article like the present; we shall therefore confine ourselves to one or two examples of the most recent practice.

In 1860 a French writer, M. Trélat, in a work entitled Le Théâtre et l'Architecte, proposed a system of ventilation which was a few years later more fully wrought out by Dr. Bonnaford, of the Academy of Science. Subsequently, in 1869, this system was adopted at the New Vaudeville Theatre in Paris. The lighting is by a large chandelier recessed into the ceiling, by which arrangement the space below is kept free from the products of combustion, while the heat of the gas is utilized to draw away the vitiated air. Figs. 7266, 7267, show the circulation of the air in the ventilating flues. A is the furnace placed beneath the floor of the building; B the cold fresh-air ducts; C the warmed fresh-air ducts discharging through the cornices of the stage at the springing of the ceiling, and at the floor of the boxes; D the ducts for the vitiated air which is drawn down behind the boxes and along by the floor of the orchestra, and then made to ascend above the ceiling by means of the suction of the chandelier E, to be discharged at F. In summer, the fresh air is introduced near the top, and admitted through a frieze running all round the ceiling. We have in this system an exact copy of the circulation in the human body; A may be regarded as the stomach in which the combustion takes place; C the arterial blood; D the venous blood; E the heart or motive force, and F the skin, through which the vitiated products are eliminated by means of expiration and perspiration. The system is in exact accordance with the teachings of science, and the experience gained at the Vaudeville showed that with proper attention it would be quite adequate to the requirements of a theatre. In this case, however, it has been in part abandoned, partly because the necessary supervision was not provided to prevent draughts in some portions of the building, and partly, and probably chiefly, because complaints were made that the position of the chandelier was not favourable to the display of the toilettes of the fair portion of the audience.

7267.

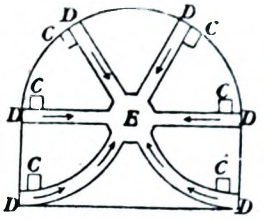

7266.

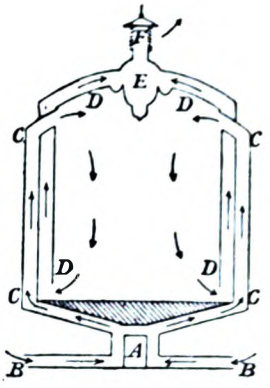

M. Joly, whose authority in matters of ventilation is universally acknowledged, gives it as his opinion that the problem of adequately ventilating a theatre without causing disagreeable and dangerous draughts, though intricate and difficult, is not insoluble; and he proposes means for accomplishing this desirable object, which we will lay before our readers. According to this authority, the difficulties are due mainly to two causes, the powerful suction occasioned by the chandelier, and the communications existing between the corridors and the interior of the building. Hitherto this interior alone has been considered. This is an error that must be avoided. A theatre consists essentially of two concentric envelopes which, for the engineer charged with the ventilation, should constitute but one hall. It may be necessary to point out here some of the defects at present existing.

Most persons must have remarked in every theatre a strong up-draught ascending from the stage in the form of a cone, having its apex in the chimney of the chandelier. A material proof of this may be had in pieces containing a banquet scene, as in the Black Domino and Lucretia Borgia, for example. The flame of the candles is seen to be violently agitated and inclined to the orchestra at an angle of 45°. We may conclude *a priori* that this draught, occasioned by a powerful heating apparatus placed at the base of a chimney, produces two effects, which must be counteracted at any cost. It carries the sound waves up to the ceiling, so that the actor's voice can be hardly heard in the front stalls; it occasions a difference of from 10° to 15° between the floor and the ceiling, and consequently a very disagreeable draught every time a door is opened, especially at the bottom, whatever the temperature of the incoming air may be. It may also be remarked that the ventilation caused by the chandelier is of little value; it carries off effectually the products of the combustion of the gas, but its action is hardly felt by the occupants of the boxes, which are open on one side only. Thus, though it produces a brisk current in the middle, that is, the unoccupied space of the theatre, it hardly operates at all upon those portions where the vitiation of the atmosphere is going on. Among the other defects of existing arrangements, may be mentioned a too high and irregular temperature, a vitiated atmosphere, contracted and inconvenient outlets, exposing the audience to great danger in case of fire, disagreeable and dangerous draughts through the boxes when the doors are opened, and an atmosphere in the green-room poisoned by the gas.

The problem of ventilating a theatre consists essentially in maintaining at all times a temperature of about 70° in every part of the building; in furnishing for each person and each gas-burner the requisite quantity of fresh air, after having warmed it in winter and cooled it in summer, and in avoiding draughts, which are always disagreeable and dangerous, especially to the feminine portion of the audience.

To ensure these results, the warm air must, in winter, before the doors are opened, be sent along the floor at once into the portion set apart for the audience, the corridors, and upon the stage. When the public have entered, and not till then, the ventilation will be directed in the manner to be afterwards described; but only through the auditorium and the green-room, the stage, the corridors, and the staircases need only to be warmed. In summer, ventilation is still more necessary than in winter, and the problem has to be solved, without complicating the floors of the lobbies and boxes with interminable ducts, by means which shall improve the acoustic properties of the theatre by diminishing the draught to the chandelier, equalize the temperature from the top to the bottom of the auditorium, and moderate the draughts through the doors. According to M. Joly, the only rational plan of admitting fresh air is through the ceiling, and to this use the cornice lends itself

very effectively, since it is situate far above the heads of the audience, and admits of large openings. The vitiated air is extracted at the points where it is produced, that is, close to the boxes and stalls, and especially near the orchestra and pit-floor, through gratings placed vertically around the pit-boxes. Jolly is also of opinion that the auditorium and the corridors, or lobbies, should constitute one single space, as far as ventilation is concerned, and that the circulation of the air through this space should be provided for in accordance with the principle observed in mines, that is, the air is to be introduced at the top, passed through the building, and discharged again at the top. This arrangement alone will ensure equality of temperature, and an efficient ventilation the direction of which shall be favourable to the sound waves. Large openings are indispensable, as it is a well-known fact that draughts are disagreeable in proportion to the narrowness of the aperture through which they pass. To render the above results certain, it is especially necessary, in a theatre, to combine the suction of the furnaces and gaslights, with the action of a mechanical ventilator, producing a slight pressure outwards, and allowing the air to be drawn from any point as required, and to be regulated, warmed, or cooled. This means has been proved by experience to be the most economical when very large spaces have to be ventilated; it is also the most certain means of providing that the incoming current shall be fully equal to the suction, and thereby prevent the ingress of air through the stage and open doors. As accessory means, the suction of the chandelier must be reduced to a minimum by reducing the dimensions of its chimney, so that it may have only such influence on the ventilation as may be deemed desirable. The suction of the gaslights in the

7268.

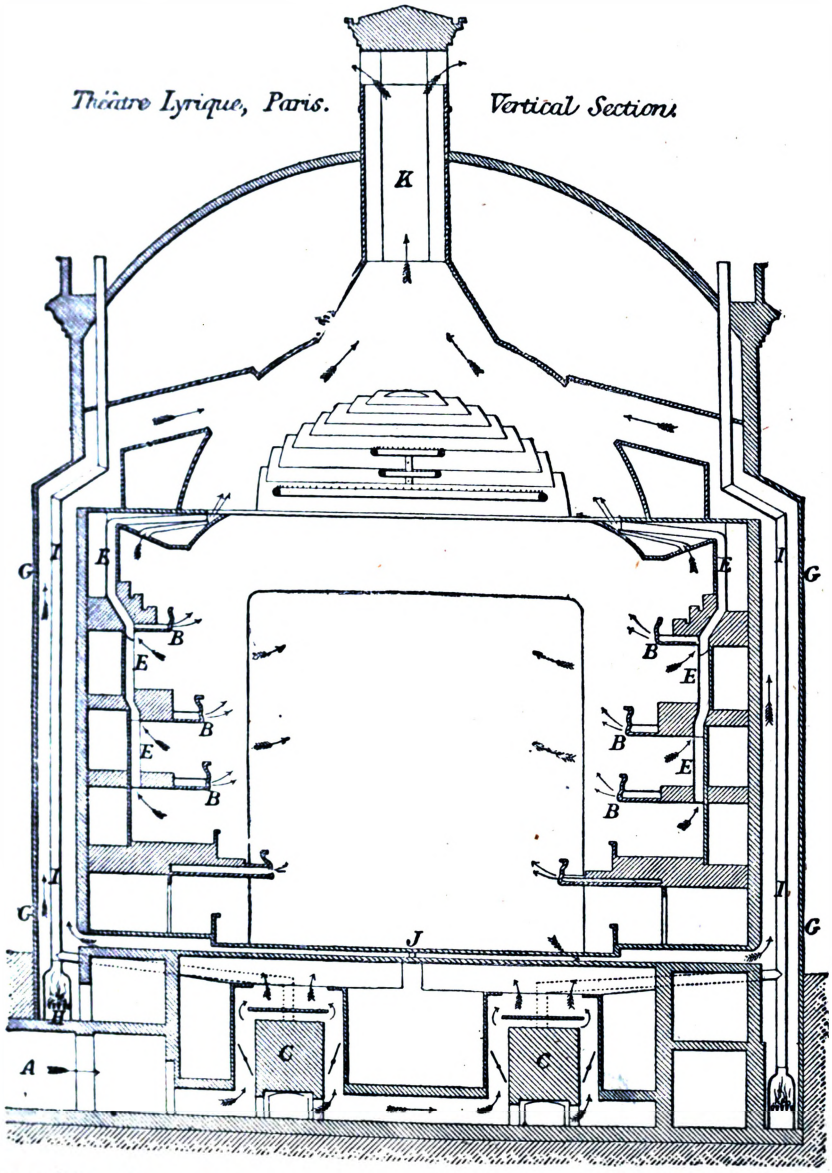

corridors and behind the scenes should also be utilized, and double doors provided in the lobbies and on the staircases. When the air-ducts have been once established, the proper openings for the

regulators determined, and the working of the system thoroughly understood, the management should be placed in the hands of properly-qualified and responsible men, for without this no system however perfect will ever succeed. The proposed solution of the problem may be briefly summed up as follows;—Direct warming of the stage, lobbies, and staircases, and the latter to be furnished with double doors. Moderate warming of the auditorium from the bottom before the public are admitted. On the raising of the curtain, the fresh air, warmed or cooled according to the season, to be admitted through the cornices of the ceiling. Extraction of the vitiated air at the bottom through gratings in risers of the floor and along the pit-boxes. Use of a mechanical ventilator to prevent draughts, especially in summer, and the control of the arrangements placed in properly-qualified hands.

A plan for ventilating a large theatre, proposed by Morin, and adopted at the Théâtre Lyrique in Paris, is shown in the accompanying Figs. 7268, 7269. A description of this plan was given by

7269.

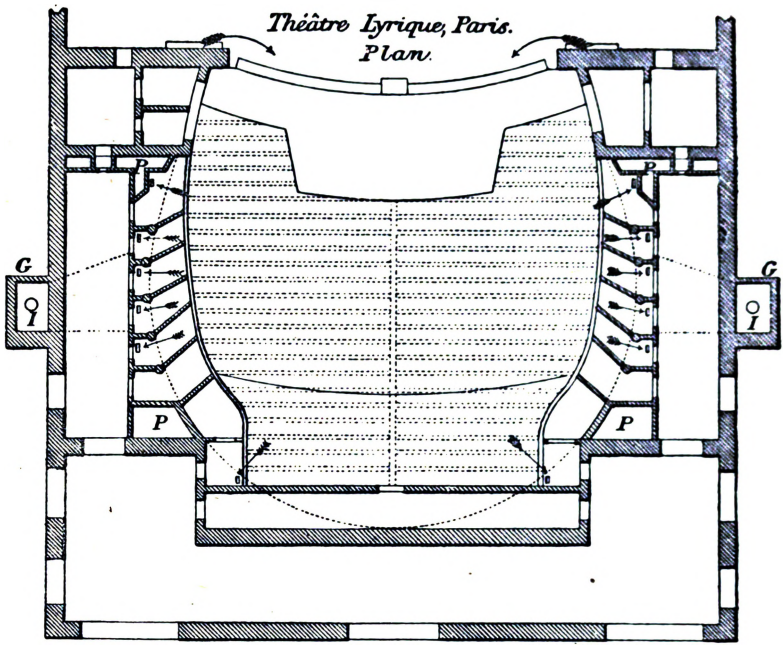

its author in a paper read before the Institute of Mechanical Engineers in 1867, from which we extract the following;—

The number of seats in this theatre is 1470. For the ventilation of the stage and its dependencies, special means have to be applied by an auxiliary discharge flue above the stage, intended for use when required to remove any large quantities of smoke from extensive illuminations. In the body of the house, where the maintenance of a constant ample ventilation is required, there should be a supply of fresh air of 1400 cub. ft. an hour for each person, with the means of increasing this in summer to 2000 cub. ft. an hour. It is important for the supply of fresh air to be obtained from open spaces or gardens, if possible, or else by special shafts bringing the air from a point above the buildings, and far removed from the outlets of vitiated air. In the case of the theatre shown in the drawings, the inlet for fresh air is made in the square of the Tour St. Jacques, by means of a well 11½ ft. diameter, communicating by a tunnel A of the same area with the space underneath the theatre, Fig. 7268, where the warming apparatus and the mixing air-chambers are situated. The velocity of the current in the inlet passage A was ascertained to be 3·08 ft. a second in a special examination that was made some years since, and the sectional area of the passage being 97 sq. ft., the volume of fresh air admitted amounted to 300 cub. ft. a second, which was somewhat in excess of the quantity that the apparatus was designed to supply. This area of inlet, however, has subsequently been allowed to be contracted considerably by the growth of ivy at the entrance.

The admission of the fresh air to the body of the house from the main supply shafts P, P, Fig. 7269, takes place between the floor joists or through the false bottoms made under the floors of each of the rows of boxes and gallery, as shown by the arrows at B, B, Fig. 7268, the air entering horizontally all round the theatre through these spaces, which should not be less than 5 to 6 in. clear height. The fresh air is also admitted by openings from about 10 ft. height in the vertical walls on each side of the stage, and by auxiliary channels under the flooring of the passages, intended specially for extra summer ventilation, and controlled by valves. For preventing the occurrence of unpleasant draughts upon the opening of doors into the exterior passages, these passages have to be warmed to a temperature of about 68°, and inlets of warm air are provided opposite the different doors in the passages.

A portion of the air, on entering by the main inlet passage A, Fig. 7268, is warmed by traversing two sets of heating apparatus C, C, placed in the basement; and the remainder is delivered into mixing chambers for regulating the temperature of the air supplied in the building. The area of

passage through the heating apparatus is 97 sq. ft., and the volume of warm air supplied is 245 cub. ft. a second, giving a velocity of current of 2·5 ft. a second.

The vitiated air is taken off through numerous openings in the lower part of the sides of the boxes and passages, and in the risers of the steps in the gallery, each box or pair of boxes having a separate discharging flue; and the total area of these openings has to be such as to allow the velocity of the air not to exceed 2·3 to 2·6 ft. a second. The exhausting flues E, E, from the several tiers of boxes are made to rise towards the dome F above the chandelier, while those from the pit, orchestra, and boxes on the ground tier, are carried below the floor into main flues leading to the vertical shafts G, G; and the area of these exhausting passages should be such as to give a velocity of current of 3·3 to 3·9 ft. a second. In the pit and orchestra, outlet gratings should be placed all round the sides, and in the sides of the air-passages underneath the seats; these outlets open into the space left under the floor, which leads to the main exhausting shaft G on each side, this space being divided accordingly into two portions by the central partition J. The outlet gratings should not be placed in any case in the floor, as was done in this theatre, contrary to Morin's intention.

The cast-iron chimney-pipes I, I, from the heating apparatus are carried up the exhausting shafts G to aid the draught, the pipes being kept isolated throughout; and a small fire-grate H is placed at the bottom of each shaft, for use when extra ventilation is required in summer. The area of the exhausting shafts G, G, is required to be such as to give a velocity of current of 5·6 to 5·9 ft. a second; and they should lead, when possible, to the dome over the centre of the theatre, into which all the outlet flues from the upper tiers of boxes also discharge. The general outlet shaft K above this dome should be built of brick, not metal, and should be carried at least 20 or 25 ft. above the top, its area being such as to give a velocity of current of about 6·6 ft. a second.

A series of experiments on the ventilation were made on five successive nights in May, 1863, with the external temperature ranging between 56° and 74°; and the result obtained was that with an average consumption of 4 cwt. of coal a night, the removal of 166 cub. ft. of air a second was effected, amounting to 1400 cub. ft. an hour for each seat of the pit and orchestra. With this ventilation the temperature of the house can be maintained within comfortable limits; but this extent of ventilation is not actually employed, as the intended use of the two large exhausting shafts G, G, is not carried out. The experiments made at the same time on the ventilation of the boxes showed that an abstraction of 377 cub. ft. of air a second was effected by the centre shaft over the dome, amounting to 1800 cub. ft. an hour for each seat. The actual average ventilation for the whole house during the five evenings was found to be 1330 cub. ft. an hour for each seat. By this uniform ventilation the temperature in the different rows of seats was maintained most remarkably constant, the average temperatures in the first and fourth tiers being 68° and 70° respectively, when the external temperature was 52°; and when the latter was 70°, their temperatures were 78° and 80° respectively; in other large theatres, however, which are not so ventilated, these temperatures are not unfrequently as high as 95° to 105°.

At another trial in November, 1863, when the external temperature was as low as 39°, the temperatures within the house were found to be maintained at 66° on the stage, 71° in the orchestra stalls, 73° in the boxes, 74° in the gallery.

The ventilation of the Houses of Parliament at Westminster offers a good example of a system suitable to buildings of that character. Probably in no instance have the general arrangements and the details been carried out with such strict regard to the object proposed as in the case of these buildings. Every existing system was examined, every authority consulted, numerous experiments were made, and no expense was spared, to obtain a perfect plan of ventilation. We may therefore regard the one finally adopted as the embodiment of all that was at that time known concerning the subject. Moreover, it is under the constant supervision of competent persons, and is on that account valuable as an illustration of what may be effected by such means.

The heating apparatus, consisting of immense steam-boilers, is placed beneath the central hall. Steam was chosen as being more prompt in its action than water, and so enabling the temperature in a given place to be changed in a shorter time. The number of members present is continually varying, and it is therefore important that the temperature and the ventilation should be under immediate control. To regulate these in accordance with the necessities of the moment, telegraphic communication is established between the Speaker and the person in charge. The mode of lighting differs in the two chambers, but the warming is carried out in the same way in both. Fig. 7270 shows a portion of the arrangement adopted. The fresh air is admitted on the side of the river through louvres A, the opening of which may be regulated in a chamber B. In this chamber, according to the seasons and requirements of the moment, the air passes between jets of cold water thrown out as spray from a tube C. If it be desired to increase the moisture of the air without cooling it, a divided jet is let fall from the pipe E, which jet is vaporized by the steam-pipe D placed beneath. In the next chamber, F, are the heating apparatus proper. These are Gurney's steam-batteries, formed of plates of metal 1 ft. in diameter, arranged around a steam-pipe at a distance of ¾ in. apart. Their number, that is, the extent of surface, is calculated according to the volume of air to be heated. From thence the air is passed through a gauze veil, to intercept the dust and soot from the atmosphere. From the large chamber H it ascends through circular ducts I, and is distributed over the assembly chamber, into which it is admitted through gratings in the floor covered with matting. At the bottom of the duct I are fixed brattice-cloths, which, when the current is too strong, are raised so as temporarily to partially close the entrance. To modify the

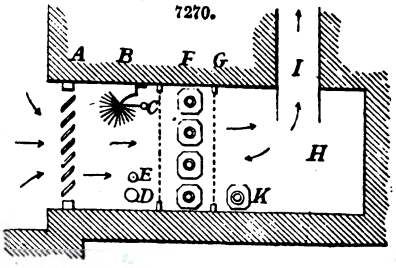

7270.

temperature, according as the House is empty or suddenly filled by a rush of members when an important question is brought forward, in the chamber H additional batteries K are placed, which are brought into or taken out of use in obedience to orders received from the Speaker.

The vitiated air is extracted through the panels of the ceiling by the suction of a large furnace situate at the base of a chimney. As the ordinary means of regulating this draught flue, and protecting it from the influence of the wind, would have had a bad effect on the appearance of the building, the smoke pipes are enclosed in iron turrets, designed in the style of the rest of the structure. The gaslights, which in both Houses are in the ceiling, though differently arranged, assist the draught of the flue in extracting the vitiated air.

An excellent plan of ventilating a large meeting room is shown in Figs. 7271 to 7274, which represent the lecture theatre of the Conservatoire des Arts et Métiers at Paris. In this case, as in the Théâtre Lyrique, the arrangements were designed by General Morin, and carried out under his supervision. These arrangements are also described by Morin in the paper previously alluded to.

7271.

Conservatoire Imperial des Arts et Métiers, Paris.

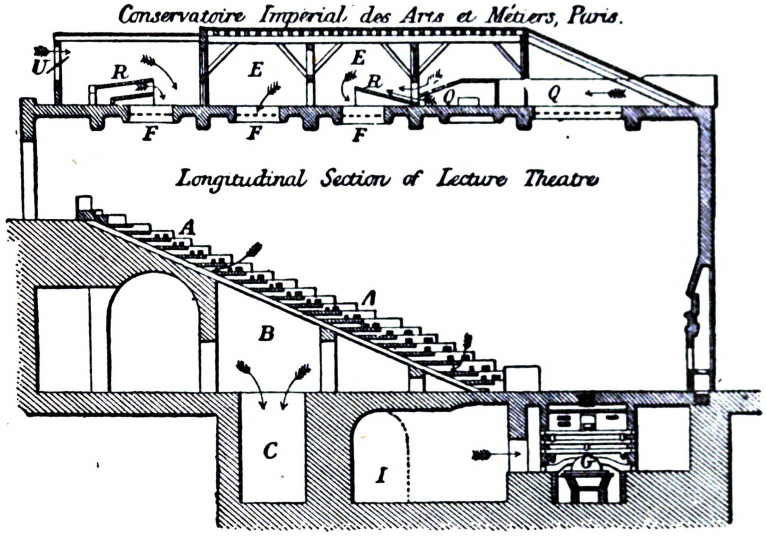

7272.

Plan of Basement.

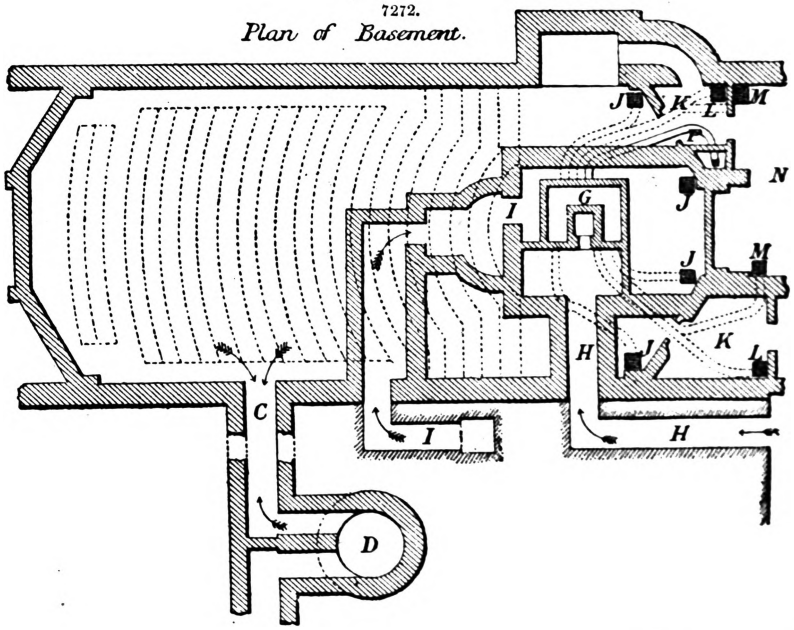

The vitiated air is taken off through a large number of orifices made in the risers of the steps A, A, Fig. 7271, opening into the passage B below the seats, which space communicates by an outlet passage C, Fig. 7272, with the discharging shaft D. The requisite draught is maintained in the shaft D by means of a fire at the bottom, dampers being placed in the passage C to moderate the current

of the air. The supply of fresh air is introduced from a mixing chamber E in the roof, and admitted to the lecture theatre through openings F, F distributed over the surface of the ceiling.

7273.

Conservatoire Impérial des Arts et Métiers, Paris.
Plan of Roof of Lecture Theatre.

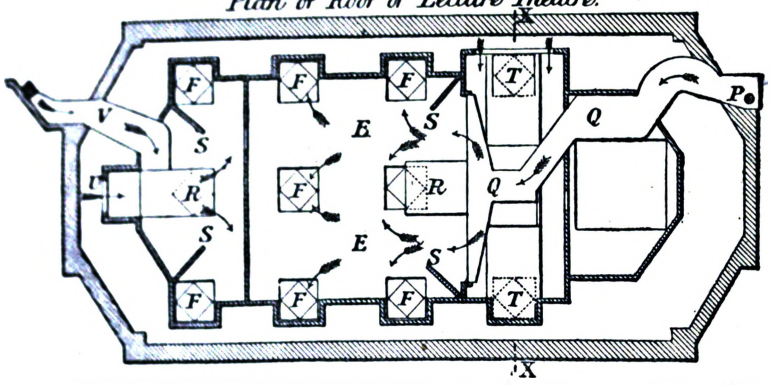

7274.

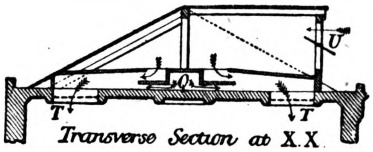

Transverse Section at X.X

In such buildings the area of openings for the abstraction of the vitiated air should be sufficient to prevent its velocity through the openings exceeding 2·3 to 2·6 ft. a second, the openings being distributed as uniformly as possible over the whole of the steps A A. The velocity of the air in the outlet passage C should not exceed 3·9 ft. a second; and the velocity in the discharging shaft D should amount to 6·6 ft. a second, in order to ensure the stability of the current.

The inlet openings F, F, for supply of fresh air, when situated in the ceiling should have such an area as to allow the velocity not to exceed 1·6 ft. a second; in this lecture theatre, where the total quantity of air admitted reaches 170 cub. ft. a second, the area of openings slightly exceeds the above proportion. When it is requisite in such places for the inlet openings to be at the sides, they should be situated on two opposite sides, and as high from the floor as practicable.

As the ventilation of buildings like this lecture theatre is required to be in action only when they are occupied, whilst the warming is needed to be in operation previously to their occupation, it is necessary to have the means of warming them by special orifices, in addition to those which supply the ventilation. For the purpose of warming, the large hot-air stove G is employed, Fig. 7272, situated under the lower end of the room; and the air necessary for combustion is supplied to it from the basement through the passage H. The fresh air to be heated is admitted through a separate passage I from the open courtyard adjoining, and after being heated by the stove is delivered into the room through the four openings J, J, in the floor; these are only opened during the preparatory warming of the lecture theatre while it is empty, and as soon as it is occupied they are closed. A constant supply of hot air is maintained to the two lobbies K, K, by the openings L, L, and also by the openings M, M, to the laboratory N at the back of the lecture theatre; this prevents any objectionable draughts of cold air occurring whenever the intervening doors are opened during the occupation of the theatre; and the doors being all made to open outwards, the tendency of the entering air is to close them. At the upper end of the lecture theatre a similar heating stove is provided, but of smaller size, for warming the main entrance staircase and vestibule at that end of the room.

A portion of the hot air from the stove G is conveyed by the ascending pipe P to the mixing air-chamber E in the roof; and in order to ensure its equal diffusion over all parts of the lecture theatre, the mouth of the hot-air passage Q is widened out to the full width of the air-chamber E, as in the plan, Fig. 7273; while a hood R is placed over the central inlet opening F, and screens S, S, are interposed at the two side openings, in order to prevent an undue proportion of the fresh warm air from entering the lecture theatre through these three nearest openings. A branch from the hot-air passage Q to the two side openings T, T, Fig. 7273, ensures a proper supply of hot air to each of these openings. A similar supply of hot air is introduced at the other end of the roof by the passage V from the smaller heating stove at that end of the lecture theatre. The fresh cold air is admitted into the roof chamber E through the entrances U, U, Figs. 7271, 7274, and by the arrangement of the hoods R and screens S at the ceiling apertures, the thorough mixing is ensured of the cold and the heated air previous to entering the lecture theatre, the orifices of the hot-air passages Q and V being situated in all cases close underneath those admitting the cold air. By means of the valves U, U, the entrance of the cold air to the mixing chamber E is regulated according to the temperature desired in the mixed air introduced for ventilation; in winter this temperature should be about 3½° below that maintained in the lecture theatre, which should be about 68°.

The Ventilation of Club-houses.—The conditions imposed by the arrangements of club-houses, which are composed of several apartments, sometimes connected, sometimes isolated, vary so greatly, that no system can be applicable to any two buildings without considerable modifications. These institutions possess, however, several features in common which must be considered in devising a suitable plan of ventilation. The apartments are large and lofty, and thus offer great facilities for

the introduction of the fresh air without causing unpleasant draughts; they are also provided with a large number of gas-burners, and at certain times of the day they are well filled with occupants. The atmosphere of the dining-rooms is laden with the odours of the viands, and that of the smoking-rooms with the fumes of tobacco. It is obvious that to keep the atmosphere of these rooms in a fit state of purity, large volumes of fresh air must be admitted. This will necessitate spacious air-ducts, and a correspondingly powerful suction or propulsion. Mechanical ventilators have been applied to this class of buildings with very satisfactory results. The Reform Club-house in London offers a very good example of this mode of ventilation; and as the general plan is well designed, and the details carefully carried out, it may be considered as one of the best of its kind.

The fresh air is supplied by a fan capable of throwing 11,000 cub. ft. of air a minute. This fan which is driven by a steam-engine of 5 horse-power, is placed in a vault in front of the building, and it throws the air into a spacious tunnel under the basement story of the building. The steam of condensation is utilized to warm the incoming air, the heat being communicated by the steam to three cast-iron chests of a cubical form. Each of these chests measures 3 ft. externally, and is divided internally into seven parallel cases, each 3 in. wide, which are separated by alternate passages of the same width. The fresh air from the fan passes through these passages, where it is heated to a temperature of about 80°, into a bricked chamber in the basement. From this chamber it is conveyed by separate ducts, provided with registers, to the several apartments of the building. The vitiated air is carried off through pipes into a brick chimney, the suction of which is assisted by a stove placed in the top story, and discharging its smoke into it. The economy of the arrangement is shown by the fact that 2 cwt. of coal is sufficient to work the engine for twelve hours, the power of the engine being besides available for pumping water for purposes of the establishment, and raising coals to the several apartments on the upper stories.

The Ventilation of Dwelling-houses.—The ventilation of dwellings is a question of really vital importance, involving as it does the health of every member of the community. And yet, strange as it may seem, nothing in the construction of houses is so little thought of. No expense is spared in ornamental details; every care is taken to provide an abundant supply of light and water; judgment is exercised in the choice of a site that shall be at once cheerful and wholesome; but that which is of still greater importance, namely, the removal of the vitiated air from the rooms, and the supply of pure air in a way that shall be neither disagreeable or dangerous, is either not thought of at all, or the cost is grudgingly allowed. This question of house ventilation is of special importance to the females of a community, since nearly the whole of their lives is passed within doors. But to any thinking person the gravity of the subject is obvious, and need not therefore be enlarged upon.

It is seldom that a complete system of ventilation is applied to a dwelling-house, even when the ventilation is provided for. Usually in each room there is an opening communicating with the outer air, either directly or through a duct, in the length of which means are provided for warming the passing current, and the fresh air admitted through this opening is left to escape through the chimney. This system, if it deserve the name of system, is both pernicious and inefficient. It occasions unpleasant draughts, and under the most favourable conditions it promotes an unequal circulation. But if we consider that for several months in the year there is no fire in the room to produce the requisite suction, and that frequently in the bed-rooms a fire is never lit, we shall at once see that any system of ventilation by single rooms must necessarily be totally inadequate to the requirements of a dwelling. An efficient system will therefore embrace the whole house, and only such is worthy of consideration. It has been urged that the difficulties attending such a system are too great to render its adoption practicable. Prejudice against novelty lies, however, at the root of this objection. That the difficulties are more apparent than real is proved by the success which has attended the introduction of a complete system in certain instances, some of which systems we propose to describe.

One of the most simple and efficient is that due to Drs. Drysdale and Hayward. These gentlemen provide an up-cast shaft to carry off the vitiated air from the whole house, and employ the waste heat of the kitchen fire to produce the requisite suction. The advantages of this are that the suction is kept in constant operation without the attention of any person in charge, and the cost of producing it is nil. The air is warmed before being admitted, and the apertures both for admission and extraction are near the ceiling. A central hall is provided, into which the warmed fresh air is conveyed. The air-ducts for each room draw their supply from this central hall, into which all the rooms open. By this means a cold draught is prevented when the doors are opened. The vitiated air escapes through a zinc pipe in or near the ceiling, and is conveyed by flues in the wall up to a foul-air chamber under the roof. This foul-air chamber consists of a zinc drum 6 ft. in diameter by 5 ft. high, into which the foul-air flues open at the same level. A discharge pipe, so placed as to draw equally from all the flues, leads from this chamber down to below the kitchen fire-place, and up behind the fire to the up-cast in the kitchen chimney-stack. The authors of this plan of ventilation have fully explained their views in a valuable little work entitled Health in Comfort in House Building, from which we extract the following description of a dwelling-house constructed by them in accordance with their system.

"The house, plans and section of which are shown in Figs. 7275 to 7277, consists of basement, ground floor, and first, second, and third floors. The basement is devoted principally to the collecting and warming of the fresh air. On the ground floor are the cellars, a ball-room, two professional rooms, a gentlemen's cloak-room and water-closets, and the main entrance, with vestibule and stairs' lobby, and servants' entrance and lobby. The first floor is the living-floor. On this is a drawing-room, with ladies' dressing-room and water-closet; a dining-room, with china closet; and a kitchen, with cook's pantry, larder, scullery, and butler's pantry. The second floor consists of the family bed-rooms, four in number, with breakfast-room, housemaid's closet, bath-room, and water-closet; and the third floor, of the servants' bed-rooms, also four in number, with children's play-room, store-room, and two water-cistern rooms. Above this, beneath the ridge of the roof, is the

foul air chamber F, into which the vitiated air of all the rooms of the house is collected, and from which it is drawn by the kitchen fire by means of a down-cast C, passing down to the ground floor, and then ascending behind the kitchen fire D, and up the chimney round the smoke-flue.

"The principal part of the house consists of a front and back block, each about 33 ft. by 20 ft., with a lobby 9 ft. wide between them, running north and south. This central lobby is the warmed air corridor, or ventilating lobby; it is lighted by a window at its south end by day, and by Rickets's globes by night. At its north end it is shut off from the main staircase, vestibule, and front entrance by vestibule doors. Out of this lobby open all the principal rooms of the house. The front entrance, with the vestibule and main staircase, 12 ft. wide, are placed, not in the centre, but at the north end of the house. The main staircase runs between the vestibule in front and the kitchen stairs behind, and is lighted by a skylight. The servants' entrance and lobby are from the south,

7275.

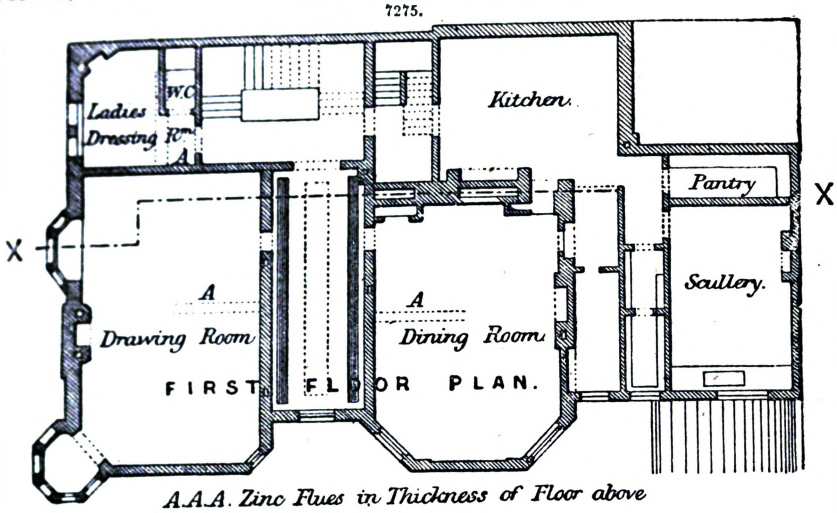

A.A.A. Zinc Flues in Thickness of Floor above

7276.

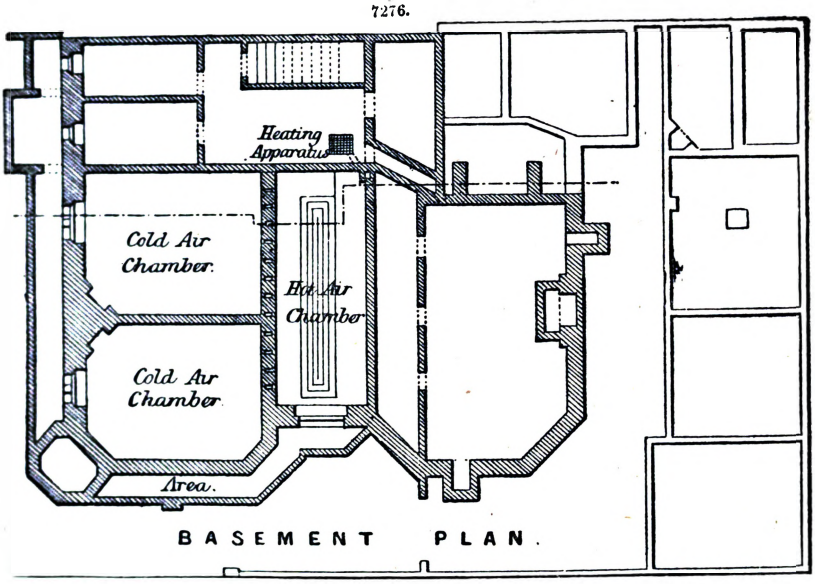

behind the ventilating lobby, and the servants' stairs run up between the main staircase in front and the kitchen behind. By this arrangement there is an easy approach from the kitchen to the dining and drawing rooms, and to both the front and the side door; and the lobby into which opens the door that lets in the cold air by being frequently opened, is shut off from that out of which the living-rooms open, which could not be if the entrance were in the middle of the front.

"The central corridor is an essential part of the house. It serves, of course, as lobbies to the rooms on each floor; on the ground floor it serves also as a museum, and between the dining and drawing rooms it serves as a bagatelle-room and picture-gallery; and by the introduction of gratings into the ceiling and floor of each story, it also serves as an open corridor from basement to attics.

"Along the centre of the ceiling of each story of the central corridor is an ornamental lattice-work, 2 ft. wide, and along each side of the floor above is an iron grating 1 ft. wide. These allow the warmed air to ascend from the lobby beneath to the lobby above; but the floors check it for the

supply of each story, and prevent it from rising directly to the top one, as it would in a stairs' lobby.

"The incoming air is warmed by a hot-water apparatus fixed in the basement of the stairs' lobby. The flow-pipe is carried up, and run one length of the bed-room lobby; it is then brought down, and run once along the picture-gallery, after which it is brought down to beneath the secondary inlet B, or the opening in the ceiling of the basement of the central lobby, which it covers, running backwards and forwards the whole length ten times; the fresh air enters into the lower part of this basement, and, rising, is warmed by the heated pipes; it then passes through into the lobby of the ground floor, and thence into the lobbies of the first, second and third floors, so that the central corridor is filled from the ground floor to the attics with warmed fresh air. Above the attic floor, this corridor is continued to the slates, and made into an air-tight chamber under the ridge of the roof, to receive the outlets of the vitiated-air flues from the different rooms of the house. Out of this central corridor all the principal rooms open, and out of it they receive their supply of fresh air. The cornice round the ceiling of this corridor, and that of each of the rooms opening out of it, has a lattice central enrichment 7 in. deep, and the wall between these two cornices is perforated by as many 7 in. by 5 in. openings as the joists will allow, so that the fresh air has a free passage from the corridor into the rooms, even when the doors are shut. The drawing-room has nineteen of these openings, affording an inlet of fresh air of more than 4½ sq. ft. distributed along the whole length of the wall on the side of the room opposite the fire-place. The dining-room has fifteen openings, affording an inlet of considerably over 3½ ft. Over the gaselier in the centre of the ceiling of each room is a perforated ornament covering an opening 9 in. square into a zinc tube, A A in the plan, 9 in. by 4½ in., affording an outlet for the vitiated air of 40 sq. in. This zinc tube goes along between the joists of the ceiling into a flue of the same dimensions in the thickness of the wall, between the corridor and the room above, where it is provided with a regulating valve. This flue discharges into the foul-air chamber; there is a similar flue from the cloak-room, dressing-room, breakfast-room, bath-room, kitchen, the hall-lamp, and from all the water-closets. All of these flues open separately into the foul-air chamber. Out of the north end of this chamber goes a brick flue or shaft, the down-cast C taken from the back staircase. This down-cast outlet shaft goes straight down to below the first floor, and then crosses eastward and rises up behind the kitchen fire-place, where it is flat, 6 ft. by 1 ft.; it is then collected into a nearly square shaft, 32 in. by 26 in. Up the centre of this shaft runs a circular earthenware smoke-flue from the kitchen fire, 18½ in. outside diameter, leaving a foul-air shaft, the up-cast, surrounding the smoke-flue. These together form a large chimney-stack, which is carried up to a greater height than any other chimney of the house."

7277.

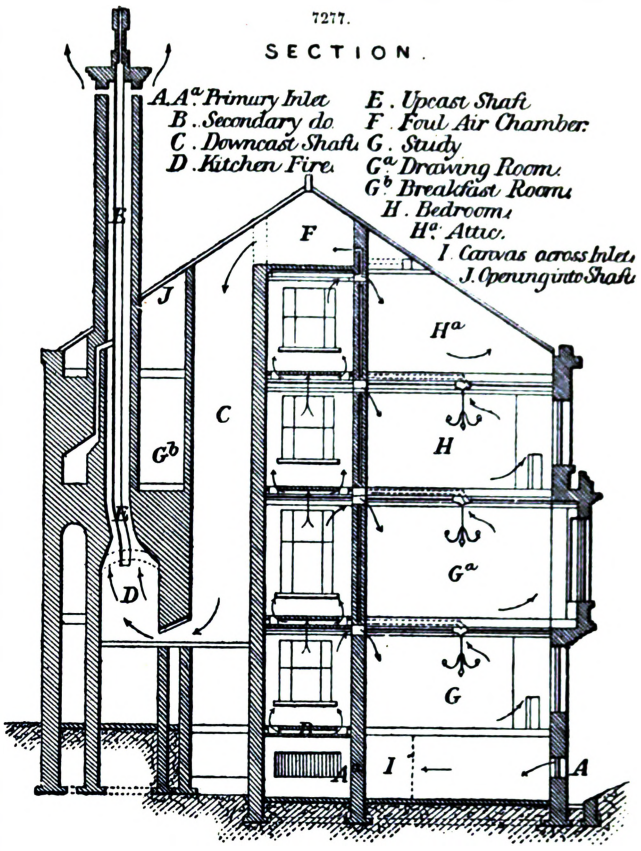

This system is a truly scientific and rational one. It is extremely simple and economical; it is continuous in its action, and operates by night as well as by day, in summer and in winter, and it does not require any attention. No doubt such a system is beyond the reach of many; but it might be modified to suit less favourable conditions than those to which its authors were subjected. It shows at least that a perfect ventilation, combined with a proper warming of the atmosphere of a room, is not an impossibility.

Another mode of ventilating a whole house by a single apparatus, due to Dr. Griscom, of New York, is shown in Fig. 7278. It consists in utilizing the smoke-flue of the heating apparatus to produce the suction necessary to draw away the vitiated air through supplementary flues contiguous to the heated-air flues. As represented in the figure, each hot-air flue enters at the bottom of the room, at the points 1 and 2, for instance; while, for the escape of the vitiated air, openings regulatable by a sliding cover, are provided near the ceilings, as A, B, C; suction through these openings being produced by the column of hot air in the flues which run up to the ventilator V in the roof, and increase in size at each story. If single flues are employed to renew the air of a room, the air which they contain may be colder or heavier than that of the room, and consequently may

produce an effect contrary to that desired. The advantages of Dr. Griscom's system are, that it provides at all times an efficient suction, is independent for every room in the house, operates during the night by the accumulated heat of the apparatus, and acts in summer by merely opening only those openings which are provided for the extraction of the vitiated air. This system, either in its complete or in a modified form, has been much employed in America, and is very generally applicable.

7278.

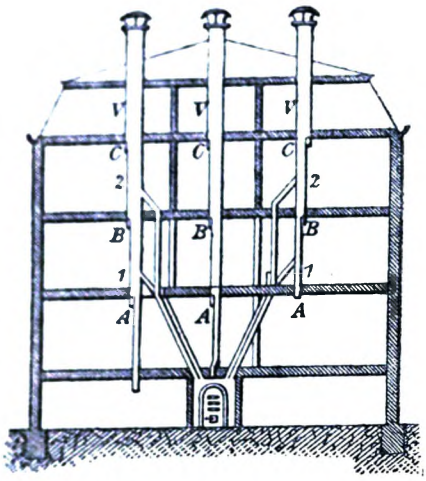

7279.

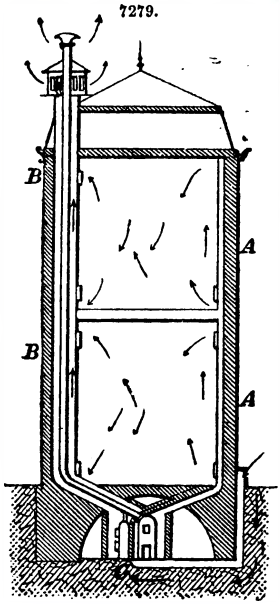

A third method of ventilation, described by Joly, is represented in Fig. 7279. This method, which may be adopted with advantage in certain cases where the form of the building will admit of the flues being arranged in the manner shown in the figure, consists in employing the heating apparatus both in summer and in winter for the supply of fresh air. In winter the heated air will be admitted through the lateral openings A, and the vitiated air extracted through the openings B, or up the chimney of the apartment, if it have a fire in it. In summer the fresh air is admitted through the same openings A, and extracted through the openings B by the suction of a special heating apparatus placed in the basement at C. When several stories have to be ventilated, provision must be made by registers and valves that the vitiated air from one story do not escape into the next. This system may be modified in numerous ways to suit the conditions of a given case. The same may, indeed, be said of all the systems we have described. It would be beyond the scope of an article like the present to point out the various modifications that each is susceptible of, even if it were possible to do so. These modifications are as numerous as the circumstances that may arise, and they must be left to the knowledge and skill of the person to whom the design is entrusted.

In large mansions the ventilation of the reception-room demands special attention. Here, at certain times, especially when used as a ball-room, a large number of persons are assembled, whose bodies, aided by the numerous gas-jets, heat and vitiate the atmosphere in an unusual degree. The ventilation arrangements in these apartments should therefore be capable of admitting large volumes of fresh air. But a grave difficulty in these arrangements arises from the heated state of the persons present, and especially from the character of the ladies' dress, which render it necessary to admit the air with a very low velocity, as draughts in such circumstances are in the highest degree dangerous. Thus a primary condition in the ventilation of such rooms is that the apertures of admission should afford a large area for the incoming current. It is also indispensable that these apertures should be widely distributed, and situate as far as possible from the occupants of the room. The warming of the fresh air previous to admission is, in these cases, a matter of the highest importance. It is, indeed, an obvious fact that the passage of large volumes of cold air through the room at such times would cause great discomfort and serious danger. To prevent this, in spite of the continual opening and shutting of the doors, is a problem extremely difficult of solution. The plan of a central corridor, arranged as in Drs. Drysdale and Hayward's system, would meet the exigencies of the case best, but architectural and other reasons will frequently render the adoption of such a plan impossible.

When, as is often the case, neither the floor nor the ceiling is available for the purpose, the fresh air must be introduced either through pilasters against the walls, having the aperture directed towards the ceiling, or through the cornices provided with numerous openings turned in the same direction. A plan of ventilating such rooms, adapted by Joly to several Parisian *salons*, is represented in Fig. 7280. The fresh-air duct enters from an adjoining room A, or it may be from a lower story; after traversing the wall, it is divided into two portions, which run in opposite directions, as B, C, D. Were the inlet not arranged in this manner, the whole of the air would enter at A, and cause a draught at that part without ventilating every part of the room. The vitiated air is

extracted through perforated openings on the opposite side of the room by means of the suction of a furnace or a mechanical ventilator. Two thermometers, one placed in the fresh-air duct, and the

7280.

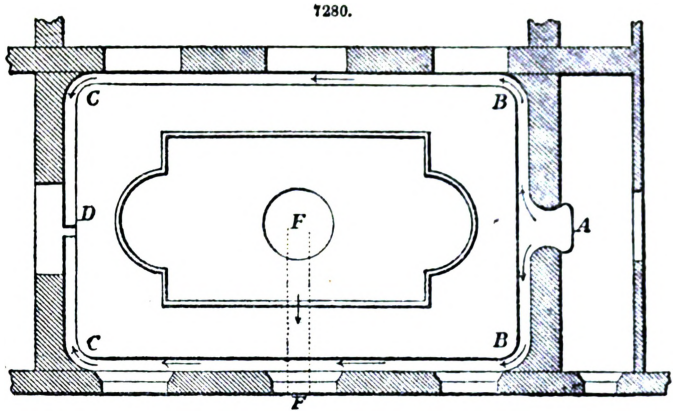

other in the foul-air duct, should be employed to show the temperature of the air as it enters and as it issues. The vitiated air may also be extracted through the smoke-flue of the fire-place by means of a portable stove, or, better still, by jets of gas in the flue, fixed specially for reception days. In such cases the air must be allowed free access to the chimney, all obstructions, such as are frequently used as ornament, being removed out of the way. To carry away the hot vitiated air from the gaselier, a flue F F is provided, which runs along between two joists in the floor above, and discharges into a chimney.

The systems we have described can be applied in their entirety to houses only at the time of their erection. Sometimes one of them may, with considerable modification, be adapted to an existing building; but usually the plan of ventilation which the exigencies of a building, constructed without any regard to such sanitary arrangements, necessitate, is merely a palliative one. Frequently little more can be done than to provide openings for the admission of fresh air in the upper framing of windows and doors. Such openings should always be directed towards the ceiling, for the purpose of distributing the air and avoiding draughts, and they should be furnished with a slide to regulate the incoming current. If means be provided for warming the air that enters over the door, these openings should alone be used in winter. With such an arrangement, the system of ventilation may be a fairly efficient one, and in many cases a little skill only is needed to contrive it. It is best to warm the air of the hall or passage from which the fresh air is admitted, because the discomfort of suddenly letting into the room large volumes of cold air by opening the door is thereby avoided. But when this is not practicable, warm air may sometimes be brought to the inlet aperture by means of a pipe. To allow the vitiated air to escape freely, the chimneys should be kept open when there is no fire, and, whenever possible, outlets should be provided in the ceiling or in the angles of the cornices. If these outlets can be placed in communication with the kitchen chimney, the efficiency of the ventilation will be greatly increased.

The ventilation of the bed-rooms presents the greatest difficulty, and is perhaps the most important. During the day-time, when the rooms are empty, the suction of the smoke-flues from the rooms beneath produces an active circulation; but at night, when the rooms are occupied, the fires below being extinguished, the circulation ceases. This happens even where a fairly complete system of ventilation is carried out, and the foul-air flues are in communication with the smoke-flue of a special heating apparatus, because the fires cannot be attended to at night. The consequence is that the atmosphere of sleeping apartments gets into a highly vitiated state. This can be readily detected by the smell which, from the above-mentioned causes, is peculiar to bed-rooms. There is no doubt but that serious injury to health, especially with children, is occasioned by this absence of ventilation at night. It would conduce to economy by avoiding sickness to keep a fire burning the greater part of the night for the sole purpose of promoting a circulation of air in the bed-rooms. For this purpose coke might be employed, which is cheap, and will burn for a long time without attention. In towns, where gas is available, a burner placed so as to be capable of being turned up the chimney will effect all that is desired.

In every system applied to dwelling-houses, summer ventilation should be provided for. During five months in the year the sitting-rooms are without a fire in them, and consequently the suction of the smoke-flues is not in operation. If this alone be relied on to produce a circulation of air, we shall have stagnation during a large portion of the year, and at that season when it is most likely to cause the greatest injury to health. It is true that during the hot weather the windows and doors are freely opened. But they are not left open all the day, and in dull, wet weather, whatever the season may be, they are kept tightly closed. To remedy this defect, the vitiated-air ducts should, whenever possible, be made to communicate with the kitchen chimney, in which there is a fire at all times. At the time of the erection of a building there will be little difficulty in carrying out such an arrangement, and very frequently, in the case of existing houses, it may be readily applied by making use of iron pipes fixed in convenient situations. Water-closets, wash-houses, and the kitchen itself, should always be ventilated by the kitchen fire, since for these offices a constant and vigorous suction is indispensable. The situation and construction of the kitchen chimney are thus matters of considerable importance. The vitiated air should not be extracted through the smoke-flue, not even from the kitchen itself; but there should be special flues provided, heated by

the smoke-flue. When there is but one air-flue, it may surround the smoke-flue in the manner described in treating of the ventilation of St. Thomas's Hospital; but it is better to provide several flues, one of which should be devoted exclusively to the ventilation of the water-closets, and another to the ventilation of the kitchen. These flues may be constructed in several ways; Fig. 7281 shows one arrangement giving two air-flues, and Fig. 7282 another by which four are obtained. If the

7281.

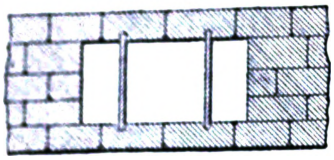

7282.

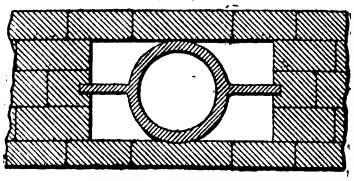

vitiated-air ducts from the different rooms in the house be placed in communication with these flues, it is evident that an adequate ventilation will be maintained at all times without the cost of special fires. We cannot too strongly insist on the necessity of putting all the water-closets in communication with one of these flues, which, as we have already said, should be used exclusively for that purpose. Only by such a provision can the dangerous effluvia from these places be completely and certainly removed. It is important that the kitchen chimney-stack with the foul-air flues should be carried up to a greater height than the other chimneys of the house, as otherwise the down-draughts through the latter in summer might carry the foul air back into the rooms.

In ventilating a kitchen, more perhaps than any other apartment, it is necessary to provide an abundant supply of fresh air previously warmed by being passed behind the fire-place. If the air be admitted cold, the servants will certainly close the apertures, and so destroy the ventilation. The closing of the inlet apertures may even change the up-cast foul-air flue into a down-cast when the fire is very active, a circumstance that would cause the contents of all the other flues to descend into the kitchen. For the admission of the fresh air in summer, openings over the windows provided with a sliding cover will be sufficient.

There remains another means of extracting the vitiated air from an apartment that we have not yet noticed. The combustion of gas heats and vitiates the atmosphere of a room in a high degree, and it has been found necessary to provide an immediate means of exit for the burned air. As the gas-burner is, in most cases, pendent from the ceiling, the opening for this purpose is made in the centre of the ceiling directly over the burner. This opening is in communication with a passage or flue, which conveys the products of combustion into the external atmosphere. It is obvious that this flue may be made available for the discharge of the whole of the vitiated air from the apartment, and such in fact is frequently done. In London especially, entrance-halls, shops, eating-houses, clubs, reading-rooms, and public buildings, are lighted by a form of gas-burner known as the sun-burner, and in all these cases ventilation is provided for by means of this burner. The earliest gaselier of this kind consisted of a circle of ordinary butterfly or fish-tail burners hung beneath a metallic reflector, into which opened the extraction-flue for the burned gases. The first objection to this was the shadow thrown by the reflector according to the height at which it was placed. This was remedied by giving the apparatus the form shown in Fig. 7283, which is still in common use. The second objection was the down-draught of cold air, which disturbed and sometimes extinguished the jets. To obviate this a valve was provided, which closed the extraction-flue at the same time as the gas-cock, and the top of the extraction-flue was protected from the wind by a cowl or a similar covering. In the accompanying figure the flue is vertical; the upper portion near the ceiling is perforated to admit the vitiated air of the apartment. When the burner is recessed into the ceiling, it is surmounted by an iron dome, perforated to allow the burned air to pass through. Fig. 7284 represents a form very extensively employed in London hotels and shops. The gas-pipe descends inside, and the vitiated air is carried off through the bottom and top of the burner. The extraction-flue in this case is horizontal, and is carried along within the thickness of the floor above to a chimney. This is a much better arrangement, as it places the extraction-flue under the influence of the suction of the chimney. In the case of a dwelling-room, this chimney should be one in which there is a constant fire, if the gas-flue is the only one provided for the escape of the vitiated air, otherwise the ventilation will in a great measure cease when the gas is extinguished. The utilization of the gas-flues has only recently been seriously considered, and it must be acknowledged that it is yet in a tentative state.

7283.

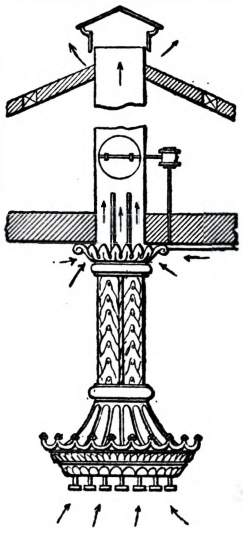

7284.

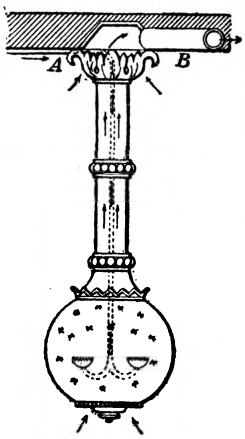

The Ventilation of Barracks and Prisons.—In the sanitary arrangements of barracks, ventilation

should occupy the foremost place. Here we have a large number of men congregated, and at night thickly crowded into small sleeping apartments. The rooms are usually badly lighted and sparely provided with fire-places. The water-closets and urinals are generally in a filthy state, polluting the air with effluvia of a dangerous character, and even the badly-constructed joints in the paving of the courtyards are filled with decaying organic matters. Moreover, the supply of water is never very abundant, and the use of it is more limited still. The ablutions of a private soldier seldom extend beyond his face and hands, the brightness of his weapons being considered by his superiors of more importance than the cleanliness of his body. These causes lead to the frequent outbreak of virulent diseases, and it is incumbent on all who have authority over the sanitary regulations to render the causes inoperative by providing an efficient ventilation. It is not necessary that we should give an example of a system applicable to barracks. The conditions vary so much that it is hardly possible to devise a plan that shall be suitable to all cases; circumstances will determine the most fitting arrangements. If the principles we have discussed be borne in mind, the foregoing illustrations will be amply sufficient to enable the sanitary engineer to design a system that shall be applicable to a given case.

The ventilation of prisons requires a system similar in its general arrangements to that in use in hospitals. The first important application of the plan of admitting the fresh air at the top of the room and extracting it at the bottom was applied to the model prison at Pentonville, and published in 1844 by Major Webb. The objects proposed were—1, to provide each prisoner with a sufficient quantity of cold or warm fresh air without causing a draught; 2, to effect the displacement of an equal quantity of vitiated air; and 3, to avoid all communication between the prisoners by the transmission of sound.

The system adopted to attain these objects is shown in Fig. 7285. In the cellars beneath the building are placed boilers, from which hot-water pipes run beneath the floors and passages of the ground story. From thence, separate warm-air ducts for each cell run up to a grating in the ceiling beyond the reach of the occupants. On the opposite side of the cell near the floor is the aperture for the escape of the vitiated air, which aperture is in communication with a separate flue through which the air is conveyed up to a collector beneath the roof. Here the fires of the establishment are utilized to give the requisite suction, and special stoves provided for use when occasion requires it. The same system has been applied to the prison of Mazas in Paris.

7285.

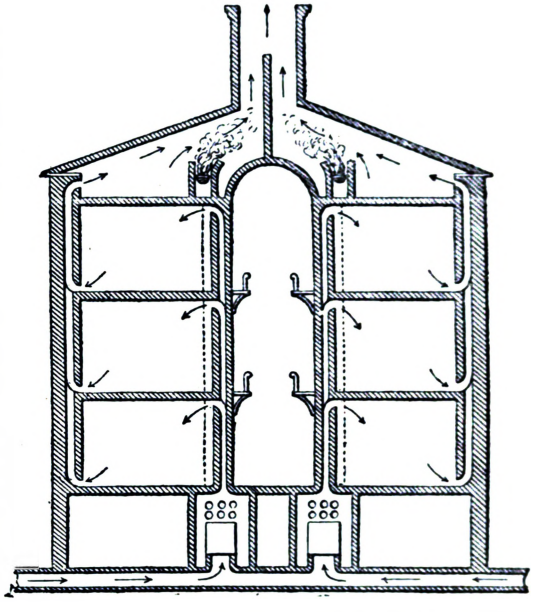

Warming.—The human body is a furnace, in which combustion is constantly going on. This combustion is the sole source of heat to the body. It is altogether erroneous to suppose that we derive heat from the medium in which we are placed. On the contrary, the medium, being at a lower temperature than our bodies, abstracts heat from them. When we enter from a cold atmosphere into a warm room, we are apt to think that our bodies are absorbing heat from the warm air of the room. But if we reflect that the temperature of the human body in health is always about 100°, whether the climate be frozen or tropical, and that the temperature of a room is always considerably less than 100°, we shall at once see that the warm atmosphere of the room must abstract heat from our bodies as the cold external atmosphere did; the only difference is that one abstracts it much more rapidly than the other. It is the sudden reduction of the rate of abstraction that causes the sensation of warmth. When the air in contact with the body is at a low temperature, it abstracts heat rapidly, and thereby causes a sensation of cold, and it is to reduce the rate of abstraction that it becomes necessary to warm the air in winter, and to increase the quantity of clothing. The combustion above alluded to is at all times sufficient to produce an excess of heat. If the temperature of the atmosphere is at 100°, it is incapable of abstracting any, and in such a case, even when sitting still, the heat is intolerable. Consequently the temperature of the atmosphere of a dwelling-room should be such as to allow the abstraction of the excess and no more; for if it abstract more, we feel cold, and if less, we are uncomfortably warm. This temperature has been found to be from 63° to 66°, and it is to maintain this temperature that the various systems of warming are employed. The maintenance of a due degree of warmth is as necessary to health as an efficient ventilation, and it should therefore be considered in conjunction with the latter.

In treating of ventilation, we described the various modes of warming the air before admitting it into the room, and as the whole question of warming lies in this, it only remains for us to describe the several kinds of apparatus by means of which the warming is effected. These apparatus may be classed under the heads of the grate, the stove, gas, steam, and hot water.

The grate is so well known that it needs no description. It is by far the most wasteful of fuel. Dr. Arnott calculated that not more than one-eighth part of the heat generated was thrown out into the room, the rest being carried up the chimney. Notwithstanding its wasteful character, it is by

far the greatest favourite in England. This is due to its air of cheerfulness and comfort, and its power of concentrating the whole family in one social circle, a power that has rendered the fire-side almost an object of worship. There is, however, a liability to err in respect to the question of waste heat. When discussing the merits of the several kinds of fire-places, it is customary to speak of the heat which escapes from a grate up the chimney as representing so much fuel absolutely lost. Such is far from being the case. The heat that passes up the chimney performs a very important work by producing the suction requisite for the extraction of the vitiated air. Therefore the heat which escapes into the chimney, instead of being considered as waste, should be regarded as so much motive power necessary to ventilation. There is no doubt, however, that the power thus afforded is greatly in excess of what is needed, and for this reason grates must be considered as very wasteful of fuel. Numerous attempts have been made to improve them in this respect, some of which have been fairly successful.

When a fire is kindled in a fire-place, the heat produced by the combustion is divided into two parts, one of which is utilized to warm the apartment—1, by radiation; 2, by the reflection of the rays from the surfaces of the fire-place; and 3, by the hot-air chamber when there is one, which heat is sometimes called heat of transmission; while the other part passes into the smoke-flue, where it serves the two important purposes of ridding the room of the products of combustion and of promoting ventilation. These latter purposes every kind of fire-place must efficiently accomplish; the objection which lies against the open grate is that too much of its heat, often as large a proportion as 90 per cent., is turned to this account. Now, a sufficient draught is produced to effect the purposes indicated above if there is a difference of temperature of 25 or 30 per cent. between the column of air in the chimney and that of the external air. But as it is frequently necessary to produce a stronger suction than would result from this difference of temperature in order to reduce the sectional area of the inlet air-ducts, we may assume that there should be a difference of 40 per cent. As only about 10 per cent. of the heat produced is utilized in the room by direct and indirect radiation, we see at once that a large proportion is absolute waste. To remedy this costly defect of the open fire there are two means available, namely, a more effective arrangement of the radiating surfaces, and a fuller utilization of what we have designated as the heat of transmission. One improvement consists in diminishing the quantity of metal in contact with the fire; for as iron is an excellent conductor of heat, it passes the heat into the wall as fast as it is generated, a fact that is rendered clearly apparent by the surface of the coals in contact with the iron being always black. This improvement is effected by forming the back and sides of fire-bricks. The form of the grate is also deserving of attention. The object being to present a large surface of glowing heat at the front, the grate should be made long and deep in proportion to its width from front to back. This principle must, however, not be carried too far, or the stratum of coal will be so reduced in thickness as to burn imperfectly. Another important matter is the shape of the chimney-mouth or recess above the grate. If the sides are square with the back, it is evident that no portion of the heat falling upon them can be thrown out into the room. To render this heat available, the sides, or covings as they are technically termed, should make an angle of about 130° with the back. Usually these covings are made of curved iron, and polished to reflect the heat; as, however, they speedily become covered with soot, it is doubtful whether they utilize the heat falling upon them to the degree that bricks would do. The conductivity of the metal transmits the heat to the wall behind, where it serves no useful purpose, but bricks would radiate it when they became sufficiently heated. Much depends also on the dimensions of the chimney-throat, which should be just sufficient to allow a passage for the burned and vitiated air and the smoke, and no more; for if larger dimensions be given it, the warmed air of the room will be carried away too rapidly. To regulate the size of this opening is the object of the register in the register-grate. All the numerous forms of grate recently introduced have been constructed on these principles. We shall not attempt the endless and unprofitable task of describing all these new inventions, but will content ourselves with merely directing attention to one form in which the fuel, instead of being placed on the top of the fire, is supplied to it from below. The chief advantage of this system is that combustion is complete, the smoke being wholly consumed by the glowing mass of coals above, through which it is forced to pass. By this means fuel is economized, and the outside atmosphere is rid of one polluting cause.

The utilization of the excess of heat, which, in spite of every improvement effected in the grate and the chimney-mouth, will pass up the chimney, offers the most promising field to inventive genius. We have already described incidentally the various modes of employing this heat to warm the air previous to admission, and so far such systems are satisfactory. But as this excess of heat is always large, more of it might be made available for radiation into the room by passing it through one or more convolutions of passage behind the chimney-piece, or in some other position, before admitting it into the chimney. An excellent plan of effecting this has been proposed by Joly, and is shown in Fig. 7286, which we take as an illustration of what may be accomplished in this way.

7286.

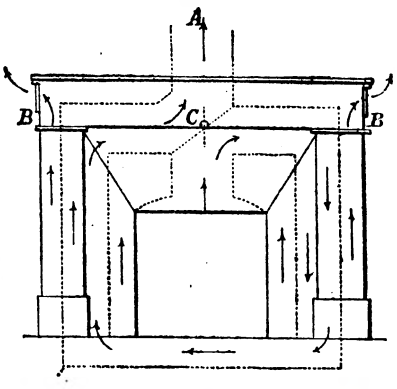

When the fire is first lit the damper C is opened, and the smoke allowed to pass directly up into the chimney A. But as soon as the draught is well established, the damper is closed, and the burned air and smoke made to pass down behind the chimney-jambs, beneath the hearth, and up again on the other side, as shown in the figure, before being admitted into the chimney, after the manner adopted in Russian stoves.

The incoming air is warmed by being made to pass up in contact with the flue, as shown at B. With such an arrangement there would be very little waste of heat.

Stoves.—By the term stove is generally understood an enclosure of metal, brick, or earthenware constructed to contain a fire, and placed away from the wall of the room. Though the open fire continues to be in favour in England, in other countries, especially where fuel is scarce, the stove is in almost universal use. For simply warming an apartment, the stove possesses an enormous advantage over the grate, inasmuch as it utilizes from 80 to 90 per cent. of the fuel. But it must be borne in mind that this economy is purchased at the cost of ventilation. As a writer has well remarked, nothing is easier than to warm a close apartment. Shut a man in it, and supply him with food, and his body will be a stove sufficient to warm the atmosphere, the only drawback to this method being that the man's death from suffocation will only be a question of time. A similar objection lies against the stove; it tends to promote suffocation. Other objections are, its liability to become overheated, and to burn the air, and its want of the cheerful aspect possessed by the open fire. The unwholesomeness of the stove has, however, been removed to a very great extent. If due precautions are taken to carry off the noxious products of combustion and to prevent the surfaces from becoming overheated, the stove may be made to do useful service, both in warming and in ventilating an apartment. The conditions which must be fulfilled in the construction of a stove to render it both wholesome and efficient are the following;—The fire-box must possess dimensions proportionate to the heating surface, and be so arranged that no portion of the surface in contact with the air may be overheated. The smoke-passage must be unobstructed, and of a diameter proportionate to the fire-box and the degree of ventilation which it is required to produce, and an evaporating surface must be provided to maintain a proper degree of moisture in the atmosphere.

The numerous inventions of recent years have all been attempts to realize these conditions. The means employed to avoid overheating the surface is to line the fire-box with bricks, and to enclose it in several casings, by which means the heating surface is increased. The earliest successful attempt to improve the stove, and render it wholesome, was made in 1855 by Dr. Arnott. The Arnott stove, shown in section in Fig. 7287, has served as a model for subsequent inventors, who have done little more than improve the details of its arrangement. The feed-draught is admitted near the ash-pit door, and is regulated by a valve, which allows a slow combustion to be maintained. The coal is introduced at the top through lids, which are rendered nearly air-tight by means of sand-joints, that is, by their edges being turned down and made to dip into grooves filled with sand. The fire-box is lined with fire-bricks, as shown in the figure, to prevent such cooling of the ignited mass as might interfere with a steady combustion. The stove proper is enclosed in a case or covering, to prevent the intense heat of the former from injuring the air of the room. In this example, the coal is represented as burning from the top downwards; but in the most approved form of this stove the coal is lit at the bottom. In this case, only that portion of it which is in contact with the bars through which the air is admitted is in a state of active combustion. The unignited coal sinks down as the lower layer is consumed; thus the stove is self-feeding. A sufficient quantity of coal may be placed in the stove to last twenty-four hours, a valuable feature when it is to be used solely for ventilative purposes.

7287.

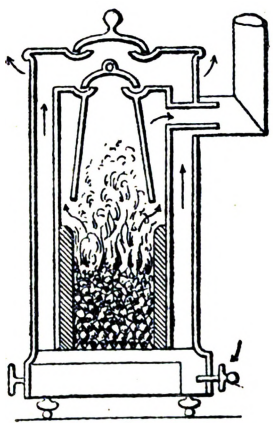

7288.

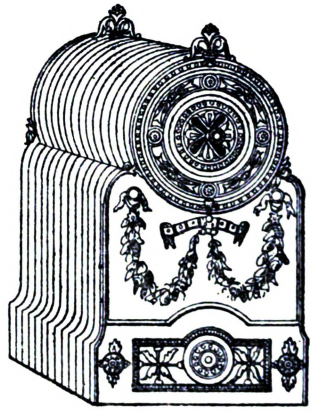

7289.

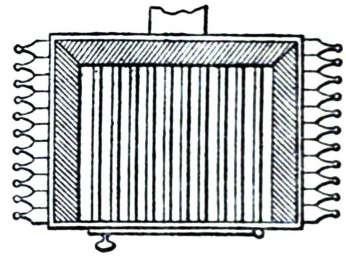

After Dr. Arnott, Sylvester, an engineer, brought out an improvement, which has produced an entire change in the construction of stoves. The new principle introduced by Sylvester consisted in multiplying the heating surfaces by means of vertical plates. The following description of the improved stove will best illustrate the principle. An elevation and a plan of the stove are given in Figs. 7288, 7289.

The fuel is placed upon a grate, the bars of which are even with the floor of the room. The sides and top of these stoves are constructed of double casings of iron, and in the sides a series of vertical plates, parallel with the front facing, are included in the interior, which collect by conduction a great portion of the heat generated by the fire, the mass of metal of which these are composed being so proportioned to the fuel consumed that the whole can never rise above the temperature of 212° Fahr. under any circumstances. The sides and top of the stove are thus converted into a hot chamber, offering an extensive surface of heated metal. At the bottom, through an opening in the

ornamental part, the air is allowed to enter, which, as it becomes warmed, rises through the different compartments formed by the hot parallel plates, and escapes at the top through similar openings into the room.

Sylvester's idea was modified a few years later by Gurney, who produced the stove represented in Fig. 7290. It resembles Sylvester's stove in possessing the multiple heating surfaces. It differs from it, however, in form, and in not always being lined with fire-brick, overheating being prevented by placing the stove in a pan filled with water, the evaporation of which is effected with a rapidity corresponding to the activity of the combustion. It would be preferable to line this stove with brick in all cases, and a more ornamental appearance might be given to it by substituting a vase, conveniently placed on the top, for the somewhat unsightly pan at the bottom. This stove possesses the undoubted merit of having popularized the use of the plates or ribs first introduced by Sylvester.

7290.

When a stove is employed solely to warm the air before being admitted into an apartment, it is termed a hot-air stove, and its construction is modified to render it suitable to the purpose intended. Stoves applied to this use generally consist of a fire-box, smoke-pipes in one or more convolutions, a casing enclosing the hot chamber, and hot-air pipes running from the top. But the details admit of an infinite variety in the arrangements, and it would therefore be futile to attempt a description of them. We have already shown some of these arrangements when treating of ventilation.

When large spaces have to be warmed, such as the interiors of public buildings, it is obvious that a single radiating stove, whatever its dimensions may be, must be quite inadequate to the purpose; for the distant parts of the room would remain cold even after the heat in the immediate neighbourhood of the fire had become intolerable. To increase the number of the stoves would entail great additional labour and expense, and in many cases would be altogether impracticable. Hence it is necessary to employ means of transmitting the heat from one fire and of distributing it equally over the whole space. The means used for this purpose are hot air, hot water, and steam, to which, as applicable to certain cases, may be added gas, though the latter must be considered as a substitute for several fires, rather than a means of transmitting heat from one fire. Hot air possesses the great advantages of being extremely simple and cheap in its application, and of ensuring an adequate and perfect ventilation; but it is open to the grave objection of rendering the air unwholesome by overheating it. As we have previously explained, air suddenly heated is unwholesomely dry; but besides this, when air is passed over metal in a state of intense heat, the organic matters floating in it are burned, causing the unpleasant smell which air so treated always possesses. This objection, however, lies rather against the details than against the principle of the system. If the air, instead of being brought into contact with a small surface intensely hot, were passed over a much larger surface at a correspondingly lower temperature, the same effect of warming would be produced without the unwholesome consequences that attend the former case. The various modes of distributing the warmed air have been already described.

Hot water is by far the most generally employed means of warming buildings. Its application to this purpose seems to have been first suggested by John Evelyn, who, in his Kalendarium Hortense, proposed, as early as 1675, to employ it to warm hothouses for plants. In Evelyn's plan, which is illustrated by drawings, we find all the elements of our present system of warming and ventilating by hot water, and the details are skilfully arranged. But it does not appear that the system made any progress in his time, for we next hear of it in 1816, as introduced into England by the Marquis de Chabannes from France, where it had been employed since 1777 by Bonnemain for the artificial hatching of chickens. Since that time it has continued rapidly to develop itself. The principle of this mode of conveying heat is a very simple one. Suppose a circuit of pipes A B C D, Fig. 7291, in which a furnace is placed at A and an expansion vessel at B; the water in this circuit will remain in a state of absolute rest, because the columns A B and D C are of equal density. Suppose now a fire made in the furnace at A; the column A B will be heated, and consequently its density lessened, and the equilibrium of the two columns will be destroyed; the portion D A will be driven towards the furnace with a force proportionate to the difference of density in the two vertical columns. If now we conceive the columns B C and A D produced, it will be evident that heat may be transmitted through them to a considerable distance. Moreover, it is obvious that if the pipes are made of a good conducting material, as iron, and are coiled or multiplied in their course, they will give off their heat in a degree directly proportionate to the extent of their surfaces and the temperature of the water relatively to that of the surrounding atmosphere.

7291.

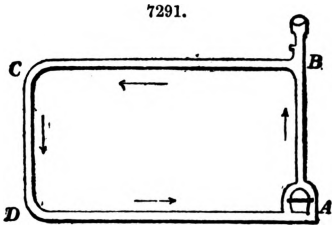

As the heat from the pipes affects the circulation of the air in the room, the pipes must be disposed in accordance with the system of ventilation adopted. Obvious as it may seem, this precaution is frequently neglected, and the consequence of such ignorance is cold draughts in every part of the room. There are various ways of arranging the hot-water pipes. Very often they are placed horizontally, either upon the floor against the walls of the apartment to be warmed, or beneath the floor; in the latter case, a grating is placed in the floor directly over the pipes. This arrangement is the usual one adopted in churches. Sometimes the pipes are fixed vertically in special flues in the walls, as shown in Fig. 7292; in this case, an opening is provided in the flue at the top and bottom of each apartment to allow of the joints being inspected, and to afford a passage for the

ventilative currents. Another arrangement, and one that in numerous cases is by much the best, is to place the pipes in coils, or some other suitable manner, in the basement of the building, and to employ them instead of air-stoves to heat the incoming ventilative current. By this means all the advantages of the hot-air system may be obtained, without the defects which we have previously pointed out. An arrangement of this kind has been described in connection with the ventilation of St. Thomas's Hospital, and at the Houses of Parliament a similar plan is carried out by means of steam. The best means of combining the warming with the ventilating of an apartment, or set of apartments, and it is impossible to separate these without producing greater evils than the warming is designed to avoid, is undoubtedly afforded by hot air. As we have already pointed out, the objections to the latter system lie, not against the principle of it, but against the mode of heating the air; and if hot water were substituted for the hot-air stove, every objection on the score of unwholesomeness would be removed. Drs. Drysdale and Hayward, whose system of warming and ventilating has already been described, condemn the mode of warming with hot air as being unwholesome, but they admit its superiority over every other mode by practically adopting it; for though they employ hot water, they do so only to warm the incoming ventilative current. An advantage possessed by the hot-water over the hot-air system is that it may be more easily applied to an existing building. The form of the furnace and the arrangement of its details admit of endless variety. The object to be attained is the same as in a steam-boiler, and the means employed must thus be similar.

7292.

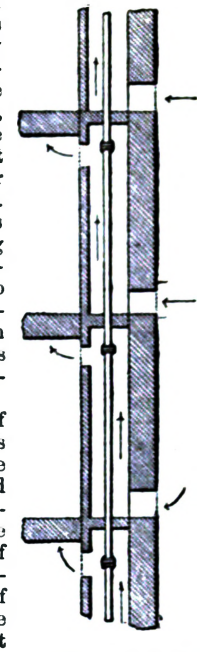

To avoid the necessity for so large a mass of water and such an extent of heating surface, the high-pressure system was introduced by Perkins. In this system the pipes are made very small and very strong, frequently 1 in. outside and ½ in. inside diameter, and always of wrought iron. These pipes are formed into an endless circuit and hermetically closed, and the water is made to circulate through them rapidly at a temperature of 300° and upwards. The furnace is enclosed in brick, and the water is heated by passing a number of coils of the pipe through the furnace. At the highest part of the circuit is an expansion vessel, also shut off from the atmosphere, and allowing an expansion of 15 or 20 per cent. The pipes may be carried through the building in the same way as in the low-pressure system already described. A common arrangement is to place a considerable coil in a pedestal or bunker with open trellis-work in front, in a convenient part of the room. From the smallness of the pipes employed in this system, they can be readily placed in position without injury to the floors and walls. The mode of increasing the heating surface by coils is also an advantage. The objections to this system are its expensiveness, which is a great obstacle to its general adoption, and the liability of the pipes to burst.

The great capacity of water for heat, and the permanence of its circulation even long after the fire in the furnace has been extinguished, ensure a regular temperature in every part of the room in spite of interruptions of the furnace fire, and constitute one of the greatest advantages of the hot-water system. Also heat can be conveyed by means of water to a great horizontal distance, which it is hardly possible to do with hot air, and the air is never overheated as it frequently is by stoves. Other advantages possessed by the system are its economy of fuel, the facilities it offers for the constant supply of hot water for baths and lavatory purposes, the ready means it affords for effecting an adequate and suitable ventilation, and the surety it gives against fire, and the lesser but great evil of smoky chimneys. On the other hand, its first cost is considerable; it is very slow in its action on account of the mass of water to be heated, and it lacks the cheerful appearance of the open fire.

Steam possesses several advantages over hot water that has led to its adoption in many public buildings. In factories, workshops, and all places where steam power is employed, it affords the readiest, the most efficient, and the cheapest means of warming, because the steam may be taken directly from the boiler. Where, however, a special boiler has to be provided, the cost is usually greater than that of water. Warming by steam is founded on the property which steam possesses of being suddenly condensed when brought into contact with a cold surface, and at the same time of giving out its latent heat, which is communicated to that surface. The condensing vessel is usually a pipe placed in a suitable position in the room to be warmed. The circuit of pipe is so disposed that the water derived from the condensation of the steam is conveyed back to the boiler. The chief advantages of steam as a means of warming, consist in the rapidity with which heat may be conveyed to and cut off from a given point; the great quantity of heat that may be conveyed, and the consequent small dimensions of the pipes required.

To ensure a successful working of the system, the details must be carefully planned and executed, and the extent of heating surface must be calculated according to the size of the room, the thickness of the walls, the number of windows, the northern or southern aspect, or any other source of loss of heat. In making this calculation of the requisite surface of steam-pipe, it is usual to allow 1 sq. ft. for every 6 sq. ft. of single-glass window of the ordinary thickness; 1 sq. ft. for every 120 sq. ft. of wall, floor and ceiling of ordinary material and thickness, and 1 sq. ft. for every 6 cub. ft. of hot air escaping a minute as ventilation. The first cost of steam apparatus is less than that of hot water, on account of the small dimensions of the pipes required; and provided the details are planned and executed properly, there will be no risk of leakage, nor any danger to be apprehended of explosion, as the condensed water returns immediately to the boiler through pipes suitably placed. As the pipes occupy even less space than Perkins's high-pressure hot-water pipes, the advantages afforded by the latter in this respect are realized in a higher degree by the use of steam.

Gas has not yet been applied systematically to the warming of the atmosphere of an apartment. It possesses, however, qualities that render it very suitable for this purpose, and it is probable that a future generation will turn on heat, as we now turn on light, by means of this valuable agent.

Books on Warming and Ventilating:—Inman (W. S.), 'Report on Ventilation, Warming, and the Transmission of Sound,' 8vo, 1836. Tredgold (T.), 'Principles of Warming and Ventilating Public Buildings,' 8vo, 1836. Péclet (E.), 'Traité de la Chaleur,' 3 vols. royal 8vo, Paris, 1843. Reid (D. B.), 'Theory and Practice of Ventilation,' 8vo, 1844. Bernan (W.), 'History of the Art of Warming and Ventilating,' 2 vols. 12mo, 1845. Arnott (N.), 'The Smokeless Fireplace,' 8vo, 1855. Morin (Gen.), 'Études sur la Ventilation,' 2 vols. 8vo, Paris, 1861. Ritchie (R.), 'On Ventilation, Natural and Artificial,' 8vo, 1862. Box (Thos.), 'Practical Treatise on Heat,' crown 8vo, 1868. Hood (C.), 'On Warming Buildings and on Ventilation,' 8vo, 1869. Eassie (W.), 'Healthy Houses,' 12mo, 1872. 'Health and Comfort in House Building,' by Drs. J. Drysdale and J. W. Hayward, 8vo, 1872. Joly (V. Ch.), 'Traité Pratique du Chauffage et de la Ventilation,' royal 8vo, Paris, 1873. Reid (D. B.), 'On Ventilation in American Dwellings,' 8vo, New York.

VIADUCT. Fr., *Viaduc*; Ger., *Viaduct*; Ital., *Viadotto*; Span., *Viaducto*.

Though strictly speaking embankments, cuttings, and tunnels are viaducts, the term is generally understood to apply only to elevated roadways supported upon artificial constructions of stone, iron, or timber. Thus a viaduct may be defined as an extensive bridge, or series of arches, erected for the purpose of conducting a road or a railway above the level of the ground in crossing a valley, or any place where it may be necessary to conduct the road or the railway at the requisite elevation above the natural surface of the ground, in order to avoid interference with previously existing lines of communication. The wide extension of the railway systems, and the imperative necessity in their construction for preserving a horizontal level for the roadway, or at least of departing from this level within very restricted limits only, have rendered the construction of viaducts an important part of railway engineering. When the necessity occurs for raising the line to a height considerably above the natural level of the ground, various considerations may arise to influence the engineer in his choice between an embankment and a viaduct. If the height be great, or the subformation of the valley of a very unstable nature, an embankment is scarcely practicable, and therefore valleys, whether having a stream in them or not, are almost always crossed by viaducts. In other cases, appearance and economy must be considered. An embankment, by cutting off the view beyond, may destroy the value of a site that without it would be picturesque. This consideration in some instances may be an important one; but usually the question is decided on the ground of economy. An embankment covers a wider base than a viaduct, and covers it too in a more absolute manner, for it must be borne in mind that the space beneath a viaduct may often be profitably utilized. Want of cohesion in the materials causes an embankment to subside under the heavy loads that are continually passing over it, and from the effects of heavy rains. This latter cause also

7293.

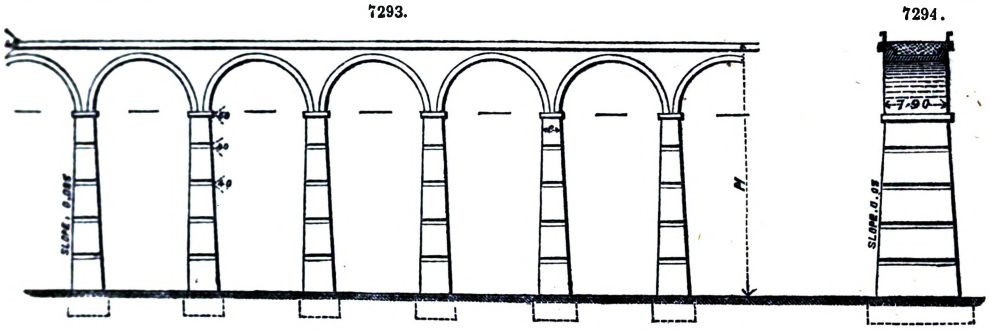

7294.

7295.

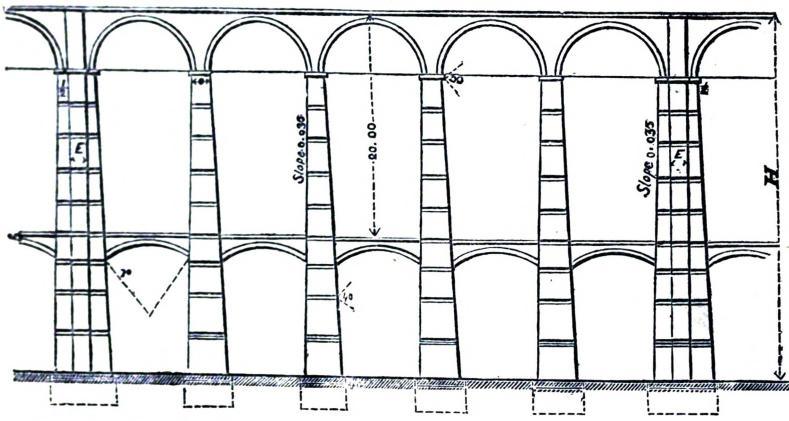

7296.

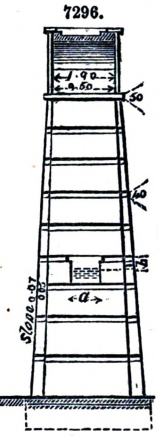

operates to wear away the sides and other exposed surfaces. Thus the question of repairs becomes a serious one, and often leads to the choice of the viaduct as involving less expense for construction

and maintenance. This is especially the case in the neighbourhood of towns where a railway has to be brought in on a level sufficiently elevated to enable it to pass over the streets. The outskirts of London contain numerous examples of this mode of carrying a line of railway.

As a viaduct is nothing more than an extended bridge, we need not enter here into a consideration of the principles of its construction, which, being precisely similar to those of a bridge, have been fully treated in another article. The only difference of construction in the details of the viaduct is due to the great height of the piers which this structure frequently requires. This circumstance renders it necessary to tie the piers between the ground line and the springing of the arches. This is effected by throwing a light arch from one to the other, as shown in Figs. 7295, 7297. These Figs. 7293 to 7298 are given as simple types of stone-viaduct construction. The two former have each a constant breadth of 25 ft. 6 in., which is sufficient for a double line of rails. The faces of the spandrils are vertical; the piers are solid and have no insets in any part, but to compensate this their batter is considerable, being ·035 in the longitudinal and ·05 in the transverse section. The bonding of the masonry is strengthened by courses of ashlar-work extending through the pier at intervals of about 12 ft. All the salient angles have stone dressings. When the height of the piers is great, they are tied or rather buttressed, since there can be no tensile strain, with light segmental arches varying in breadth from 11 ft. to 14 ft. 6 in., according to the size of the principal arches. This buttress arcading is situate about 60 ft. below the springing of the arches. In the type represented in Fig. 7295, every fifth pier is strengthened with a central mass of masonry, the thickness of which is constant for the whole height, but which varies from 5 to 8 ft. according to the requirements of the load and the thrust. In the side elevation this central portion forms projecting counterforts.

There are numerous fine examples of timber viaducts in existence. One on the line of the Richmond and Petersburg Railway, in North America, has a total length of 2900 ft., and is constructed on the truss principle. The truss frames, which are horizontal on top and bottom, are 20 ft. deep, and are supported upon eighteen granite piers standing 40 ft. above the water, at distances apart varying from 130 to 153 ft. A similar structure crosses the Susquehannah, and is 2200 ft. in length, each span being 220 ft.

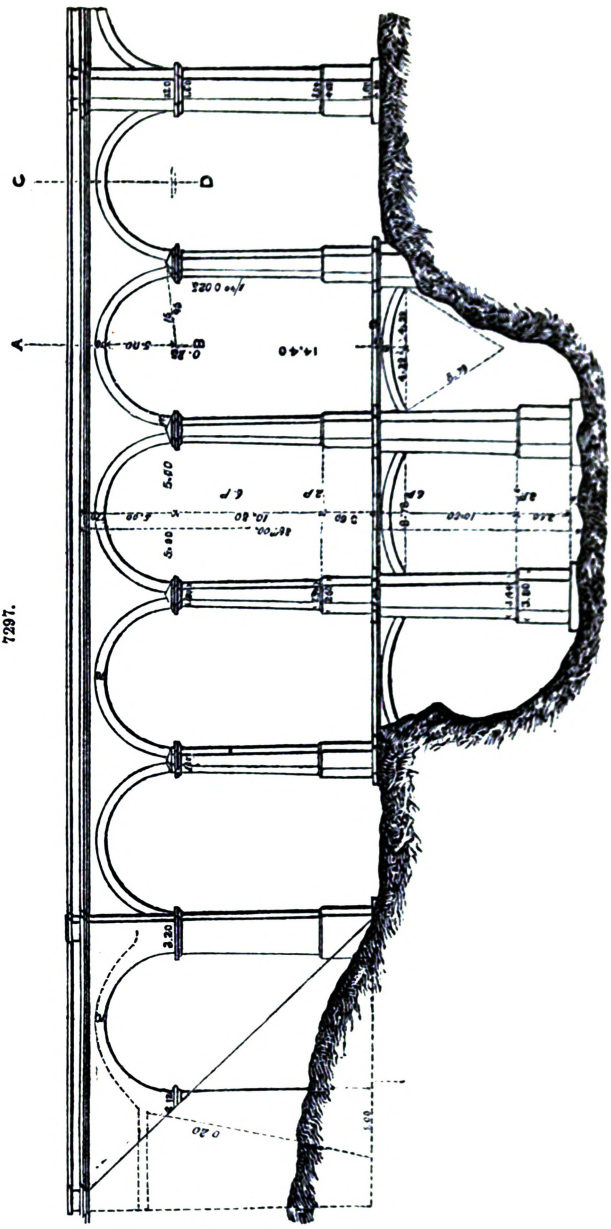

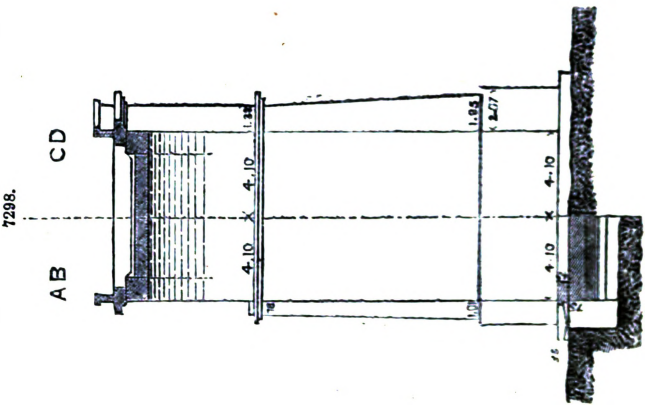

Among the finest examples existing in England may be mentioned two on the Newcastle and Tynemouth Railway. One of these structures crosses the Ouse bourne, a public roadway, a mill-race, and the adjacent valley. It consists of five wooden arches, three of which are 116 ft. span and two 114 ft., and four end arches of masonry, two having a span of 43 ft., and the two others 36 ft.; the total length of the viaduct being 918 ft. It carries a double line of rails in a breadth of 26 ft., and a footway 5 ft. broad; the height of the rails above the bed of the bourne is 108 ft. The piers are of masonry, and have a considerable batter, the principal being 21 ft. wide at the footings and 15 ft. at the springing of the arches; they are continued, with reduced dimensions, up to the level of the roadway. The construction of the wooden arches is worthy of special attention. The ribs of which they are composed are of kyanized Dantzic deal, and they are turned to a radius of 68 ft., the rise being about 33 ft. The planks of which these ribs are made up are 11 in. wide by 3 in. thick, and are in lengths varying from 20 to 46 ft. In building up the rib, these planks are laid two whole ones in one course, and one whole one and two halves in the next course, care being taken to cross the joints both longitudinally and in depth. The number of courses so formed is fourteen. To fix these courses together, oak treenails 1½ in. in diameter were used at distances of 4 ft. apart, each treenail passing through three of the deals. The latter were bent to the required form over a centre. To keep the joints perfectly tight, a layer of brown paper, previously dipped in boiling tar, was placed in them. The spandrils of these arches are formed of trussed framings. The flooring, which is of 3-in. planking over transverse beams 4 ft. apart, is covered with a composition impervious to water. The dimensions marked on Figs. 7293 to 7297 are metric.

On the Cornish Railway there are numerous examples of timber viaducts that are deserving of a careful study.

VICE. Fr., *Étau*; Ger., *Schraubstock*; Ital., *Morsa*; Span., *Tornillo*.

See Hand-Tools.

VIRTUAL VELOCITY. Fr., *Vitesse virtuelle*; Ger., *Virtuelle Geschwindigkeit*; Ital., *Velocita virtuale*; Span., *Velocidad virtual*.

Virtual velocity is a minute hypothetical displacement, or motion, assumed in analysis to facilitate the investigation of statical problems. With respect to any given force of a number holding a material system in equilibrium, it is the projection upon the direction of the force, of a line joining its point of application with a new position of that point conceived to be taken indefinitely near to the first, and without disturbing the equilibrium of the system, or the connection of its parts with each other. The *principle of virtual velocities* is the law that when several forces are in equilibrium the algebraic sum of their virtual moments is equal to zero. The *virtual moment* of a force is the product of the intensity of the force multiplied by the virtual velocity of its point of application.

VIS VIVA. Fr., *Force vive*; Ger., *Lebendige Kraft*; Ital., *Forza viva*; Span., *Fuerza viva*.

Living force, or *vis viva*, is the force of a body moving against resistance, or doing work, in distinction from *vis mortua*, or dead force. It is expressed by the product of the mass of a body multiplied by the square of its velocity. The *principle of vis viva* is the principle that the difference between the aggregate work of the accelerating forces of a system and that of the retarding forces is equal to one-half the *vis viva* accumulated or lost in the system whilst the work is doing. The term *vis mortua* is not often used, and implies force doing no work but only producing pressure. *Vis inertiæ* is the resistance of matter, as when a body at rest is set in motion, or a body in motion is brought to rest, or has its motion changed either in direction or in velocity; it also means inertness; inactivity. *Vis inertiæ* and inertia are not strictly synonymous, as the former applies to the resistance itself which is given, while the latter applies merely to the property by which it is given.

WARMING. Fr., *Chauffage*; Ger, *Heizung*; Ital., *Riscaldamento*; Span., *Calefaccion*.

See Ventilation.

WATER-WORKS. Fr., *Conduite et Distribution des eaux*; Ger., *Wasserbitung*; Ital., *Condotta di acqua potabile*; Span., *Obras hidraúlicas*.

One of the primary wants of human life is a constant supply of wholesome water; and it is a chief duty of the hydraulic engineer to collect and convey economically stores of water, from either natural or artificial reservoirs, to communities which without water could not exist. Rain is the great source of all fresh water, and when it has fallen it presents itself in the forms of surface waters, rivers, streams, and natural springs; but may also be obtained from wells and impounding reservoirs, artificially formed, or from a combination of two or more of the sources named. As it is useless to entertain any scheme for supplying water without ascertaining the composition and quality of all the waters liable to be drawn upon, a careful analysis must be made, and the purest available source selected.

Analysis.—A great difficulty with water analysis is, to satisfactorily prove the sanitary effect of certain impurities contained in the water,—that is, to show connection between the results of an analysis, and the physiological effects produced by the use of that water. This arises from our knowledge of the subject being less definite than could be wished. Thus, the good or bad effect of moderately hard waters containing chalk is an open question; and although waters containing sewage, metals, living organisms, animal refuse, or salts, in excess, are decidedly objectionable, waters having traces of them may be used with impunity. It is, however, generally recognized that water can be considered good and potable when it is fresh, clear, without odour; when its savour is very weak; when it is especially neither distasteful, salt, or sweetish; when it contains little of extraneous matters; when it is sufficiently aërated; when it dissolves soap without forming clots; and when it cooks vegetables well.

Any glass-stoppered bottle, holding two or three quarts, will serve for collecting the sample to be examined, care being exercised that the bottle is quite clean. In collecting the water from a river or tank, the bottle should be immersed below the surface, and rinsed once or twice with the water; and in taking the water from a pump or pipe a quantity should be allowed to flow away

before the sample is collected. The bottle is filled up nearly to the neck, and the stopper tied over with a piece of linen, no luting or wax being used.

As a Preliminary Examination.—Fill a flask of white glass with the water to be examined, and compare its colour with that of distilled water contained in a similar flask. Warm some of the water slightly in a test-tube; shake it, and observe if the water possesses any peculiar odour or taste. Warming will often disclose the smell of a water when none could be noticed cold.

A rough method of estimating the suspended matters is to pass a known quantity of water through a filter paper previously washed in distilled water. The increase in the weight of the filter paper gives the quantity of total suspended matter in the known volume of the water. Burn the paper, and weigh the ash; then burn an unused filter paper previously ascertained to be precisely similar to that used, and also weigh its ash; the quantity of ash in excess of that contained in the unused filter gives the amount of suspended inorganic matter in the water.

Estimation of the Ammonia.—It is desirable to proceed at once with the determination of this constituent, since it is the most liable to change. The method of estimation is based upon the fact that an alkaline solution of mercuric iodide, added to a liquid containing ammonia, produces a brown coloration, due to the formation of the iodide of tetramercurammonium. This test, known as Nessler's, is capable of detecting one part of ammonia in 20,000,000 parts of water.

Preparation of the Nessler Test.—Dissolve 35 grms. of iodide of potassium in water, and add, little by little, a cold concentrated solution of corrosive sublimate, until the precipitate disappears on stirring. Cautiously continue the addition of the corrosive sublimate solution until a very slight precipitate only remains. Filter, and add to the filtrate an aqueous solution of caustic soda, prepared by dissolving 100 grams. of stick potash in 200 cub. cent. of water, and dilute the mixture; to this is added a tenth part of a weak solution of bichloride of mercury. The liquid should be allowed to stand for a short time, and a portion decanted for use. The test requires, in addition to the use of distilled water without ammonia, a standard solution of ammonia, containing $\frac{1}{100}$ milligramme of ammonia to each cub. cent. of water; and graduated glass cylinders.

Transfer 100 c.c. of the water to be tested to one of the glass cylinders; add 1½ c.c. of the Nessler solution, and agitate. Notice the colour, and then pour as much of the solution of ammonia as may be considered equivalent to it into a second cylinder, and fill up with 100 c.c. distilled water; add 1½ c.c. of Nessler solution. Mix thoroughly, and compare the tints in the two cylinders. If they are about equal in intensity, the quantity of ammonia used will equal the ammonia in the water that is being examined. Observe whether the natural water becomes turbid after the addition of the Nessler test. A decided precipitate is due to lime or magnesia salts, and indicates hardness.

Wanklyn and Chapman are of opinion that the usual methods employed to determine organic matter in water are inadequate for the purpose; and in their Treatise upon Water Analysis, which we quote, they give a new method of determining nitrogenous organic matters. It is distinguished by its special adaptation to detect and estimate microscopic quantities, and appears to be especially adapted to deal with the organic impurities in water.

Most kinds of water contain ammonia, or ammoniacal salts, which either was recently, or may presently become, a constituent of organic matter. In addition to this, most kinds of water actually do contain more or less nitrogenous organic matter, which furnishes ammonia either on simple boiling with carbonate of soda, or else on boiling with permanganate of potash, in presence of excess of alkali. By estimating the amount of ammonia obtainable from water, noting the circumstances under which it is obtained, we have a measure of the nitrogenous organic matter present in water.

We have seen the wonderful delicacy of the means of estimating and detecting ammonia. Such being the character of this estimation, the great advantage of causing determinations of organic matter to depend on measurements of ammonia will be manifest. By making these measurements of ammonia stand for measurements of organic matter, we apply micro-chemistry to water analysis.

The following is an outline of Wanklyn and Chapman's ammonia method of water analysis:—Half a litre of water is taken and placed in a tubulated retort, and 15 c.c. of a saturated solution of carbonate of soda added. The water is then distilled until the distillate begins to come over free from ammonia; that is until 50 c.c. of distillate contain less than $\frac{1}{100}$ of a milligramme of ammonia. A solution of potash and permanganate of potash is next added. This solution is made by dissolving 200 grammes of solid caustic potash and 8 grammes of crystallized permanganate of potash in a litre of water. The solution is boiled to expel any ammonia, and both it and the solution of carbonate of soda ought to be tested on a sample of pure water before being used in the examination of water. 50 c.c. of this solution of potash and permanganate should be used with half a litre of the water to be tested.

The distillation is continued until 50 c.c. of distillate contain less than $\frac{1}{100}$ milligramme of ammonia. Both sets of the distillate have the ammonia in them determined by means of the Nessler test, as previously described. No matter how good the water may be, it is desirable never to distil over less than 100 c.c. with carbonate of soda, and not less than 200 c.c. after the addition of the potash and permanganate of potash.

Wanklyn and Chapman give as an example of their method the following analysis of Edinburgh water, from Swanston, one half-litre taken;—

	Cub. Cent.	Ammonia. Milligrm.
1. Distillate (carbonate of soda)	100 =	·015
2. Distillate (potash and permanganate of potash)	100 =	·035
	100 =	·015
		·050

Therefore, 1 litre of Edinburgh water, from Swanston, contains 0·030 milligrm. free ammonia; 0·10 milligrm. albuminoid ammonia; or 1,000,000 parts contain 0·03 parts free ammonia, 0·10 parts albuminoid ammonia.

We are indebted to Dr. Clark for a simple method of determining the degree of hardness of a water. It consists in ascertaining the quantity of a standard solution of soap in spirit required to produce a permanent lather with a given quantity of the water under examination, the result being expressed in degrees of hardness, each of which corresponds to one grain of carbonate of lime in a gallon = 70,000 grains of distilled water, of the water. The following are the particulars of Clark's test:—16 grains of pure Iceland spar, carbonate of lime, are dissolved, taking care to avoid loss, in pure hydrochloric acid; the solution is evaporated to dryness in an air-bath, the residue is again redissolved in water, and again evaporated; and these operations are repeated until the solution gives to test-paper neither an acid nor an alkaline reaction. The solution is made up by additional distilled water to the bulk of precisely one gallon. It is then called the standard solution of 16° of hardness. Good London curd soap is dissolved in proof spirit, in the proportion of one ounce of avoirdupois for every gallon of spirit, and the solution is filtered into a well-stoppered phial, capable of holding 2000 grains of distilled water; 100 test measures, each measure equal to 10 water-grain measures of the standard solution of 16° degrees of hardness, are introduced. Into the water in this phial the soap solution is gradually poured from a graduated burette, the mixture being well shaken after each solution of soap, until a lather is formed of sufficient consistence to remain for five minutes all over the surface of the water, when the phial is placed on its side. The number of measures of soap solution is noticed, and the strength of the solution is altered, if necessary, by a further addition of either soap or spirit, until exactly 32 measures of the liquid are required for 100 measures of the water of 16° of hardness. The experiment is made a second and a third time, in order to leave no doubt as to the strength of the soap solution, and then a large quantity of the test may be prepared, for which purpose Dr. Clark recommends to scrape off the soap into shavings by a straight sharp edge of glass, and to dissolve it by heat in part of the proof spirit, mixing the solution thus formed with the rest of the proof spirit.

Process for ascertaining the Hardness of Water.—Previous to applying the soap test it is necessary to expel from the water the excess of carbonic acid; that is, the excess over and above what is necessary to form alkaline or earthy bicarbonates, this excess having the property of slowly decomposing a lather once formed. For this purpose, before measuring out the water for trial, it should be shaken briskly in a stoppered glass-bottle half filled with it, sucking out the air from the bottle at intervals by means of a glass tube, so as to change the atmosphere in the bottle; 100 measures of the water are then introduced into the stoppered phial, and treated with the soap test, the carbonic acid eliminated being sucked out from time to time from the upper part of the bottle. The hardness of the water is then inferred directly from the number of measures of soap solution employed by reference to the subjoined Table. In trials of waters above 16° hardness, 100 measures of distilled water should be added, and 60 measures of the soap test dropped into the mixture, provided a lather is not formed previously. If at 60 test measures of soap test, or at any number of such measures between 32° and 60°, the proper lather be produced, then a final trial may be made in the following manner;—

100 test measures of the water under trial are mixed with 100 measures of distilled water, well agitated, and the carbonic acid sucked out; to this mixture soap test is added, until the lather is produced. The number of test measures required is divided by 2, and the double of such degree will be the hardness of the water. For example, suppose half the soap test that has been required correspond to $10\frac{5}{10}$ degrees of hardness, then the hardness of the water under trial will be 21. Suppose, however, that 60 measures of the soap test have failed to produce a lather, then another 100 measures of distilled water are added, and the preliminary trial made, until 90 test measures of soap solution have been added. Should a lather now be produced, a final trial is made, by adding to 100 test measures of the water to be tried 200 test measures of distilled water, and the quantity of soap test required is divided by 3; and the degree of hardness corresponding with the third part being ascertained by comparison with the standard solutions, this degree multiplied by 3 will be the hardness of the water. Thus, suppose 85·5 measures of soap solution were required, $\frac{85{\cdot}5}{3} = 28{\cdot}5$, and on referring to the Table, this number is found to correspond to 14°, which, multiplied by 3, gives 42° for the actual hardness of the water.

TABLE OF SOAP-TEST MEASURES CORRESPONDING TO 100 TEST MEASURES OF EACH STANDARD SOLUTION.

Degree of Hardness.	Soap Test Measures.	Differences as for the next Degree of Hardness.	Degree of Hardness.	Soap Test Measures.	Differences as for the next Degree of Hardness.
0	1·4	..	9	19·4	1·9
1	3·2	1·8	10	21·3	1·9
2	5·4	2·2	11	23·1	1·8
3	7·6	2·2	12	24·9	1·8
4	9·6	2·0	13	26·7	1·8
5	11·6	2·0	14	28·5	1·8
6	13·6	2·0	15	30·3	1·8
7	15·6	2·0	16	32·0	1·7
8	17·5	1·9			

Rainfall.—Rain is of all meteorological phenomena the most capricious, both as regards its frequency and the amount which falls in a given time. In some places it rarely or never falls, whilst in others it rains almost every day; and there does not yet exist any theory from which a probable estimate of the rainfall in a given district can be deduced independently of direct observation. But although dealing with one of the most capricious of the elements, we nevertheless find a workable average in the quantity of rain to be expected in any particular place, if careful and continued observations are made with the rain-gauge. G. J. Symons, the meteorologist, to whose continued investigations we are indebted for our most reliable data upon the subject of rainfall, gives the following practical instructions for using a rain-gauge;—

"The mouth of the gauge must be set quite level, and so fixed that it will remain so; it should never be less than 6 in. above the ground, nor more than 1 ft., except when a greater elevation is absolutely necessary to obtain a proper exposure.

"It must be set on a level piece of ground, at a distance from shrubs, trees, walls, and buildings, at the very least as many feet from their base as they are in height.

"If a thoroughly clear site cannot be obtained, shelter is most endurable from N.W., N., and E., less so from S., S.E., and W., and not at all from S.W. or N.E.

"Special prohibition must issue as to keeping all tall growing flowers away from the gauges.

"In order to prevent rust, it will be desirable to give the japanned gauges a coat of paint every two or three years.

"The gauge should, if possible, be emptied daily at 9 A.M., and the amount entered against the previous day.

"When making an observation, care should be taken to hold the glass upright.

"It can hardly be necessary to give here a treatise on decimal arithmetic; suffice it therefore to say that rain-gauge glasses usually hold half an inch of rain (0·50), and that each $\frac{1}{100}$ (0·01) is marked; if the fall is less than half an inch, the number of hundredths is read off at once, if it is over half an inch, the glass must be filled up to the half inch (0·50), and the remainder (say 0·22) measured afterwards, the total (0·50 + 0·22) = 0·72 being entered. If less than $\frac{1}{10}$ (0·10) has fallen, the cypher must always be prefixed; thus if the measure is full up to the seventh line, it must be entered as 0·07, that is, no inches, no tenths, and seven hundredths. For the sake of clearness it has been found necessary to lay down an invariable rule that there shall always be two figures to the right of the decimal point. If there be only one figure, as in the case of one-tenth of an inch, usually written 0·1, a cypher must be added, making it 0·10. Neglect of this rule causes much inconvenience.

"In snow three methods may be adopted—it is well to try them all. 1. Melt what is caught in the funnel, and measure that as rain. 2. Select a place where the snow has not drifted, invert the funnel, and turning it round, lift and melt what is enclosed. 3. Measure with a rule the average depth of snow, and take one-twelfth as the equivalent of water. Some observers use in snowy weather a cylinder of the same diameter as the rain-gauge, and of considerable depth. If the wind is at all rough, all the snow is blown out of a flat-funnelled rain-gauge."

A drainage area is almost always a district of country enclosed by a ridge or watershed line, continuous except at the place where the waters of the basin find an outlet. It may be, and generally is, divided by branch ridge-lines into a number of smaller basins, each drained by its own stream into the main stream. In order to measure the area of a catchment basin a plan of the country is required, which either shows the ridge-lines or gives data for finding their positions by means of detached levels, or of contour lines.

When a catchment basin is very extensive it is advisable to measure the smaller basins of which it consists, as the depths of rainfall in them may be different; and sometimes, also, for the same reason, to divide those basins into portions at different distances from the mountain chains, where rain-clouds are chiefly formed.

The exceptional cases, in which the boundary of a drainage area is not a ridge-line on the surface of the country, are those in which the rain-water sinks into a porous stratum until its descent is stopped by an impervious stratum, and in which, consequently, one boundary at least of the drainage area depends on the figure of the impervious stratum, being, in fact, a ridge-line on the upper surface of that stratum, instead of on the ground, and very often marking the upper edge of the outcrop of that stratum. If the porous stratum is partly covered by a second impervious stratum, the nearest ridge-line on the latter stratum to the point where the porous stratum crops out will be another boundary of the drainage area. In order to determine a drainage area under these circumstances it is necessary to have a geological map and sections of the district.

The depth of rainfall in a given time varies to a great extent at different seasons, in different years, and in different places. The extreme limits of annual depth of rainfall in different parts of the world may be held to be respectively nothing and 150 in. The average annual depth of rainfall in different parts of Britain ranges from 22 in. to 140 in., and the least annual depth recorded in Britain is about 15 in.

The rainfall in different parts of a given country is, in general, greatest in those districts which lie towards the quarter from which the prevailing winds blow; in Great Britain, for instance, the western districts have the most rain. Upon a given mountain ridge, however, the reverse is the case, the greatest rainfall taking place on that side which lies to leeward, as regards the prevailing winds. To the same cause may be ascribed the fact that the rainfall is greater in mountainous than in flat districts, and greater at points near high mountain summits than at points farther from them; and the difference due to elevation is often greater by far than that due to one hundred miles geographical distance.

The most important data respecting the depth of rainfall in a given district, for practical purposes, are, the least annual rainfall; mean annual rainfall; greatest annual rainfall; distribution of the rainfall at different seasons, and, especially, the longest continuous drought; greatest flood rainfall, or continuous fall of rain in a short period.

The available rainfall of a district is that part of the total rainfall which remains to be stored in reservoirs, or carried away by streams, after deducting the loss through evaporation, through permanent absorption by plants and by the ground, and other causes.

The proportion borne by the available to the total rainfall varies very much, being affected by the rapidity of the rainfall and the compactness or porosity of the soil, the steepness or flatness of the ground, the nature and quantity of the vegetation upon it, the temperature and moisture of the air, the existence of artificial drains, and other circumstances. The following are examples;—

Ground.	Available Rainfall ÷ Total Rainfall.
Steep surfaces of granite, gneiss, and slate, nearly	1
Moorland and hilly pasture	from ·8 to ·6
Flat cultivated country	from ·5 to ·4
Chalk	0

Deep-seated springs and wells give from ·3 to ·4 of the total rainfall.

Such data as the above may be used in roughly estimating the probable available rainfall of a district; but a much more accurate and satisfactory method is to measure the actual discharge of the streams at the same time that the rain-gauge observations are made, and so to find the actual proportion of available to total rainfall.

The following Table gives the mean annual rainfall in various parts of the world.

TABLE OF RAINFALL. Collected by G. J. Symons.

Country and Station.	Period of Observations.	Latitude.	Mean Annual Fall.
EUROPE.	years.	° ′	ins.
AUSTRIA—Cracow ..	5	50 4 N	33·1
Prague	47	50 5	15·1
Vienna	10	48 12	19·6
BELGIUM—Brussels ..	20	50 51	28·6
Ghent	13	51 4	30·6
Louvain	12	50 33	28·6
DENMARK—			
Copenhagen	12	55 41	22·3
FRANCE—Bayonne ..	10	43 29	56·2
Bordeaux	32	44 50	32·4
Brest	30	48 23	38·8
Dijon	20	47 14	31·1
Lyons	..	45 46	37·0
Marseilles	60	43 17	19·0
Montpelier	51	43 36	30·3
Nice	20	43 43	55·2
Paris	44	48 50	22·9
Pau	12	43 19	37·1
Rouen	10	49 27	33·7
Toulon	..	43 4	19·7
Toulouse	52	43 36	24·9
GREAT BRITAIN—			
England, London ..	40	51 31	24·0
„ Manchester	40	53 29	36·0
„ Exeter ..	40	50 44	33·0
„ Lincoln ..	40	53 15	20·0
Wales, Cardiff ..	40	51 28	43·0
„ Llandudno ..	40	53 19	30·0
Scotland, Edinburgh	40	55 57	24·0
„ Glasgow ..	40	55 52	39·0
„ Aberdeen	40	57 8	31·0
Ireland, Cork	40	51 54	40·0
„ Dublin ..	40	53 23	30·0
„ Galway ..	40	53 15	50·0
HOLLAND—Rotterdam	..	51 55	22·0
ICELAND—Reikiavik	5	64 8	28·0
IONIAN ISLES—Corfu ..	22	39 37	42·4
ITALY—Florence ..	8	43 46 N	35·9
Milan	68	45 29 N	38·0
Naples	8	40 52	39·3
Rome	40	41 53	30·9
Turin	4	45 5	38·6
Venice	19	45 25	34·1
MALTA	..	35 54	15·0
NORWAY—Bergen ..	10	60 24	84·8
Christiania	..	59 54	26·7

Country and Station.	Period of Observations.	Latitude.	Mean Annual Fall.
EUROPE—*continued.*			
PORTUGAL—	years.	° ′	ins.
Coimbra (in vale of Mondego)	2	40 13	224·0?
Lisbon	20	38 42	23·0
PRUSSIA—Berlin ..	6	52 30	23·6
Cologne	10	50 55	24·0
Hanover	3	52 24	22·4
Potsdam	10	52 24	20·3
RUSSIA—			
St. Petersburg ..	14	59 56	16·2
Archangel	1	64 32	14·5
Astrakhan	4	46 24	6·1
Finland, Uleaborg ..	..	65 0	13·5
SICILY—Palermo ..	24	38 8	22·8
SPAIN—Madrid	..	40 24	9·0
Oviedo	1	43 22	111·1
SWEDEN—Stockholm	8	59 20	19·7
SWITZERLAND—Geneva	72	46 12	31·8
Great St. Bernard ..	43	45 50	58·5
Lausanne	8	46 30 N	38·5
ASIA.			
CHINA—Canton	14	23 6 N	69·3
Macao	..	22 24	68·3
Pekin	7	39 54	26·9
INDIA—			
Ceylon, Colombo ..	..	6 56	91·7
„ Kandy ..	..	7 18	84·0
„ Adam's Peak	..	6 50	100·0
Bombay	33	18 56	84·7
Calcutta	20	22 35	66·9
Cherrapongee	..	25 16	610·3
Darjeeling	..	27 3	127·3
Madras	22	13 4	44·6
Mahabuleshwur ..	15	17 56	254·0
Malabar, Tellicherry	..	11 44	116·0
Palamcotta	5	8 30	21·1
Patna	..	25 40	36·7
Poonah	4	18 30	23·4
MALAY—Pulo Penang	..	5 25	100·5
Singapore	..	1 17	190·0
PERSIA—Lencoran ..	3	38 44 N	42·8
Ooroomiah	1	37 28	21·5
RUSSIA—Barnaoul ..	15	53 20	11·8
Nertchinsk	12	51 18	17·5

TABLE OF RAINFALL—*continued.*

Country and Station.	Period of Observations.	Latitude.	Mean Annual Fall.
ASIA—*continued.*	years.	° ′	ins.
RUSSIA—Okhotsk ..	2	59 13	35·2
Tiflis	6	41 42	19·3
Tobolsk	2	58 12	23·0
TURKEY—			
Palestine, Jerusalem	14	31 47	65·0?
	3	31 47	16·3
Smyrna	..	38 26 N	27·6
AFRICA.			
ABYSSINIA—Gondar ..	..	12 36 N	37·3
ALGERIA—Algiers ..	10	36 47	37·0
Constantina	..	36 24	30·8
Mostaganem	1	35 50	22·0
Oran	2	35 50 N	22·1
ASCENSION	2	8 8 S	11·5
CAPE COLONY—			
Cape Town	20	33 52 S	24·3
GUINEA—			
Christiansborg ..	..	5 30 N	19·2
MADEIRA	4	33 30 N	30·9
MAURITIUS—Port Louis	..	20 3 S	35·2
NATAL—Maritzburgh	..	29 36 S	27·6
ST. HELENA	3	15 55 N	18·8
SIERRA LEONE	..	8 30	86·0
TENERIFFE	2	28 28 N	22·3
NORTH AMERICA.			
BRITISH COLUMBIA—			
New Westminster ..	3	49 12 N	54·1
CANADA—			
Montreal, St. Martin's	2	45 31	47·3
Toronto	16	43 39	31·4
HONDURAS—Belize ..	1	17 29	153·0
MEXICO—Vera Cruz ..	..	19 12	66·1
RUSSIAN AMERICA—			
Sitka	7	57 3	89·9
UNITED STATES—			
Arkansas, Fort Smith	15	35 23	42·1
California, San Francisco	9	37 48	23·4
Nebraska, Fort Kearny	6	40 38	28·0
New Mexico, Socorro	2	34 10	7·9
New York, West Point	12	41 23	46·5
Ohio, Cincinnati ..	20	39 6	46·9
Pennsylvania, Philadelphia	19	39 57	43·6
South Carolina, Charlestown ..	15	32 46	48·3
Texas, Matamoras ..	6	25 54	35·2
WEST INDIES—Antigua	..	17 3	39·5
Barbadoes	10	13 12 N	75·0
,, St. Philip	20	13 13 N	56·1
Cuba, Havannah ..	2	23 9	50·2

Country and Station.	Period of Observations.	Latitude.	Mean Annual Fall.
N. AMERICA—*cont.*	years.	° ′	ins.
W. INDIES—Matanzas	1	23 2	55·3
Grenada	..	12 8	126·0
Guadaloupe, Basseterre	..	16 5	126·9
Guadaloupe, Matonba	..	16 5	285·8
Jamaica, Caraib ..	..	18 3	97·0
,, Kingstown	..	17 58	83 0
St. Domingo, Cape Haitien	..	19 43	127·9
St. Domingo, Tivoli	..	19 0	106·7
Trinidad	..	10 40	62·9
Virgin Isles, St. Thomas'	..	18 17	60·6
Virgin Isles, Tortola	..	18 27 N	65·1
SOUTH AMERICA.			
BRAZIL—Rio Janeiro ..	..	22 54 S	58·7
S. Luis de Maranhao	..	3 0 S	276·0
GUYANA—Cayenne ..	6	4 56 N	138·3
Demerara, George Town	5	6 50	87·9
Parimaribo	..	6 0	229·2
NEW GRANADA—			
La Baja	6	7 22	54·1
Marmato	15	5 29	90·0
Santa Fe de Bogota	6	4 36	43·8
VENEZUELA—Cumana	..	10 27	7·5
Curaçoa	..	12 15 N	26·6
AUSTRALIA.			
NEW SOUTH WALES—			
Bathurst	3	33 24 S	22·7
Deniliquin	2	35 32	13·8
Newcastle	3	32 57	55·3
Port Macquarie ..	12	31 29	70·8
Sydney	6	33 52	46·2
NEW ZEALAND—			
Auckland	2	36 50	31·2
Christchurch	3	43 45	31·7
Nelson	2	41 18	38·4
Taranaki	2	39 3	52·7
Wellington	2	41 17	37·8
SOUTH AUSTRALIA—			
Adelaide	6	34·55	19·2
TASMANIA—			
Hobart Town	12	42 54	20·3
VICTORIA—Melbourne	6	37 49	30·9
Port Phillip	11	38 30	29·2
WEST AUSTRALIA—			
Albany	..	35 0	32·1
York	1	31 55 S	25·4
POLYNESIA.			
SOCIETY ISLANDS—			
Tahiti, Papiete ..	5	17 32 S	45·7

Springs.—Everyone is familiar with the fact that certain porous soils, such as loose sand and gravel, absorb water with rapidity, and that the ground composed of them soon dries up after heavy showers. If a well be sunk in such soils, we often penetrate to considerable depths before we meet with water; but this is usually found on our approaching some lower part of the porous formation where it rests on an impervious bed; for here the water, unable to make its way downwards in a direct line, accumulates as in a reservoir, and is ready to ooze out into any opening which may be made, in the same manner as we see the salt water filtrate into and fill any hollow which we dig in the sands of the shore at low tide. A spring, then, is the lowest point or lip of an underground reservoir of water in the stratification. A well, therefore, sunk in such strata will most probably furnish, besides the volume of the spring, an additional supply of water.

The transmission of water through a porous medium being so rapid, we may easily understand

why springs are thrown out on the side of a hill, where the upper set of strata consist of chalk, sand, or other permeable substances, while the subjacent are composed of clay or other retentive soils. The only difficulty, indeed, is to explain why the water does not ooze out everywhere along the line of junction of the two formations, so as to form one continuous land-soak, instead of a few springs only, and these oftentimes far distant from each other. The principal cause of such a concentration of the waters at a few points is, first, the existence of inequalities in the upper surface of the impermeable stratum, which lead the water, as valleys do on the external surface of a country, into certain low levels and channels, and, secondly, the frequency of rents and fissures, which act as natural drains. That the generality of springs owe their supply to the atmosphere is evident from this, that they vary in the different seasons of the year, becoming languid or entirely ceasing to flow after long droughts, and being again replenished after a continuance of rain. Many of them are probably indebted for the constancy and uniformity of their volume to the great extent of the subterranean reservoirs with which they communicate, and the time required for these to empty themselves by percolation. Such a gradual and regulated discharge is exhibited, though in a less perfect degree, in all great lakes, for these are not sensibly affected in their levels by a sudden shower, but are only slightly raised, and their channels of efflux, instead of being swollen suddenly like the bed of a torrent, carry off the surplus water gradually.

Among the causes of the failure of Artesian wells, we may mention those numerous rents and faults which abound in some rocks, and the deep ravines and valleys by which many countries are traversed; for, when these natural lines of drainage exist, there remains a small quantity only of water to escape by artificial issues. We are also liable to be baffled by the great thickness either of porous or impervious strata, or by the dip of the beds, which may carry off the waters from adjoining high lands to some trough in an opposite direction,—as when the borings are made at the foot of an escarpment where the strata incline inwards, or in a direction opposite to the face of the cliffs.

The mere distance of hills or mountains need not discourage us from making trials; for the waters which fall on these higher lands readily penetrate to great depths through highly-inclined or vertical strata, or through the fissures of shattered rocks; and after flowing for a great distance, must often reascend and be brought up again by other fissures, so as to approach the surface in the lower country. Here they may be concealed beneath a covering of undisturbed horizontal beds, which it may be necessary to pierce in order to reach them. It should be remembered that the course of waters flowing under ground bears but a remote resemblance to that of rivers on the surface, there being, in the one case, a constant descent from a higher to a lower level from the source of the stream to the sea; whereas, in the other, the water may at one time sink far below the level of the ocean, and afterwards rise again high above it.

Store Reservoirs.—The purpose of a store reservoir is to contain a sufficient quantity of the excess of rainfall in wet seasons, to allow the supply to be kept up uninterruptedly throughout the year. Thus the capacity of such a reservoir will be determined by the available annual rainfall, and the annual service demand. On both these questions much difference of opinion exists, and consequently we find no uniformity in the practice of engineers. Even in cases where the same bases have been adopted in calculating the available rainfall and the average daily consumption, there is a want of uniformity in estimating the storage room required. We learn from Beardmore's Hydraulic Tables that the capacity of existing store reservoirs varies from one-third to one-half the available annual rainfall, and that the quantity stored varies from 120 to 180 days' supply. The longest drought observed in England lasted 105 days, and as such a drought is never likely to be exceeded in duration, it would seem that 120 days' supply would in every case be amply sufficient. But in calculating contingencies, it must be borne in mind that the drought may begin when the reservoir is half empty. Moreover, the loss of water by evaporation in hot, dry weather is very great, a fact that is usually under-estimated. Instances have occurred where a storage of 150 days' supply has proved insufficient. But on the other hand, it should not be forgotten that during a season of drought the supply to the reservoir does not cease altogether; at least, such is not the case until the drought has lasted for a considerable time. If this fact be estimated at its true value, it will be found that, provided there be no extraordinary circumstances to take into account, 120 days' demand will be sufficient. Except at the end of a prolonged dry season, there is, even in the driest weather, a flow of about one-fourth of a cubic foot a second from every 1000 acres of the watershed; and this gives a supply of 130,000 gallons in the twenty-four hours. In the cases alluded to in which a larger storage was found to be insufficient, the demand was probably under-estimated.

In calculating the capacity of a reservoir, there must always be a certain space left below the lowest working level that is not available for storage. The use of this space, or bottom as it is termed, is to collect the sediment from the water. No rule for the volume of the bottom can be deduced from existing examples, for here again we find a total want of uniformity. Some engineers give a depth equal to one-sixth of the total depth of the water at the deepest part of the reservoir; but it is difficult to discover on what basis such a calculation rests. The object being to allow a depth of still water above the bottom for the purpose of preventing sediment from being drawn off, this end would probably be best attained by allowing such a depth that at the lowest working level no portion of the bed at a distance of 3 ft. from the water's edge shall be less than 6 in. from the surface.

When the capacity of the reservoir has been determined, its dimensions will depend mainly on the character of the site. Depth is essential to the purity of the water, for in shallow water the growth of plants is very rapid. Moreover, as evaporation depends upon the extent of surface exposed, the loss from this cause will be less as the depth is increased. For these reasons, a reservoir should always possess considerable depth.

In selecting the site of a reservoir, the chief things to be considered are the elevation, and the configuration of the ground. The elevation must be such that from the lowest water-level there shall be a sufficient fall to provide for the highest point to be supplied and the highest point over

which the water has to be conveyed, and that above the top water-level there shall be a gathering ground of sufficient extent to furnish the requisite quantity of water. The configuration of the ground is a matter of great importance. The site which in this respect is the most suitable for a reservoir is a valley, across the outlet of which an embankment may be thrown, for in such a case only one side is artificial. It is not often, however, that these favourable conditions are to be met with. Very little guidance can be given in this matter; it must be left to the skill and judgment of the engineer to make the best use of the natural features with which he has to deal. When the site and the dimensions have been fixed upon, a plan should be prepared with a sufficient number of contour lines to allow the capacity of the reservoir to be calculated for every foot in depth; for when this is known, a vertical scale fixed in it will at once show the actual contents at any moment. Another important matter connected with the choice of a site is the nature of the soil. It is obvious that unless the stratum forming the bottom and sides of the reservoir be an impervious one, it will not retain the water. Very frequently the stratum forming the surface is permeable, and in such a case it is necessary to make borings to ascertain where an impervious one is to be met with, because at whatever depth this may be situate, the embankment must be carried down to it. It is also requisite to make several borings within the limits of the reservoir, in order to discover any permeable strata that may crop out; for such strata would convey away the water if proper precautions were not taken to prevent it. The engineer should also ascertain where fitting materials may be obtained for the embankment, and especially the puddle-walls.

The selection of the site of the embankment is a matter of the greatest importance, and one that tests the knowledge and ability of the engineer more perhaps than any other connected with reservoir construction. A bad selection may entail enormous labour and expense, and even then lead to failure. Instances might be cited in which the work has been abandoned after a great outlay had been incurred. Too much attention cannot be devoted to an examination of the site previous to commencing operations, and every information bearing directly or indirectly upon the question should be diligently sought after. The figure of the ground must be determined with accuracy by making, not only a longitudinal section along the centre line of the proposed embankment, but several cross-sections taken at suitable points. The former will be a cross-section of the valley, and will show the nature, form, and position of the impervious stratum, which must be unbroken from one side of the valley to the other, and must rise on both sides above the top water-level. To enable these sections to be made, it will be necessary to sink numerous trial shafts, both along the line of the embankment and on each side of it. In no case should these practical tests be omitted, for the appearance of the ground at the surface is very deceptive, and if only one or two borings are made a fault may be missed. Unless the nature of the ground be accurately determined by these means, no reliable estimate of the cost can be made. It is very important that the sinking of the trial shafts should not be suspended as soon as water-tight material is met with, for the stratum may be of insufficient thickness or broken by fissures and faults, in which cases the permeable strata beneath will carry off the water. When such a case occurs, the sinking must be carried on till another and more satisfactory stratum is reached. Also if the outcrop of a permeable stratum has been discovered in the bed of the reservoir, it must be clearly ascertained that the sinking for the foundation of the puddle-wall of the embankment has been carried through such stratum, as otherwise the water would be carried off by it beneath the embankment. In some localities, where the pitch of the strata is high, this latter condition might require the puddle-ditch to be carried down to a very great depth; and in such a case it might be more practicable to remove the permeable material at the outcrop for a few feet in depth, and to fill the excavation with puddle.

The best material for the foundation of a reservoir embankment is clay, and the next compact rock free from fissures. In preparing the foundation, all porous materials, such as sand, gravel, and fissured rock, should be carefully removed, as well as all materials that are not sufficiently strong to carry the weight of the embankment. Before the excavation for the puddle-trench is begun, the thickness of the puddle-wall at the surface of the ground must be determined. As the pressure of the water at the foot of the wall increases with the depth, it is usual to make the thickness depend upon the height. But as it is unnecessary to make this thickness proportionate to the pressure, we find a want of uniformity in the practice of engineers. A batter of 1 in 8 or 1 in 12 on both sides of the wall is the rate of increase commonly adopted; but the thickness of the wall at the top of the embankment varies in existing examples from 3 to 10 ft. It is certain that a puddle-wall 3 ft. thick at the top, and having a batter of 1 in 12, is sufficient to prevent filtration of the water so long as the wall remains in a sound condition; but in so thin a wall there is danger of cracks and fissures being caused by unequal settlement. The extreme thickness of 10 ft. is evidently greatly in excess. A good rule would be to make the top thickness 5 or 6 ft., according to the quality of the puddle, and in every case to give a batter on both sides of 1 in 12. When the thickness of the wall at the surface of the ground has been determined, the puddle-trench may be commenced. Here the usual practice is to make the trench diminish in width downwards, in the same proportion as the puddle-wall diminishes above the surface upwards. There is, however, no sufficient reason for this decrease in thickness below the surface; on the contrary, as the ground on the up-stream side is completely saturated with water, the pressure on the puddle increases with the depth of the trench, and theoretically therefore the thickness of the wall should increase to the bottom of the trench. But such a design would lead to great practical difficulties, for the ground would not stand if undermined for the trench in that way, however strong the timbering might be. A similar objection lies against the common practice of making the width of the trench diminish in depth. It is difficult to dress the sides of a deep trench to a steep batter, and still more difficult to timber it effectively. And if we take into account the extra labour involved in working in the narrow space towards the bottom of the trench, we must conclude that the plan of sinking the trench with perpendicular sides, and thus keeping the puddle of the same thickness from the surface of the ground to the bottom of the trench, is the most economical that can be adopted.

Care must be taken to prevent injury from springs rising under the base of the embankment. Fissures through which water issues may be calked with oakum, or, if large, plugged with wooden or iron plugs. If water rises from the bottom of the trench, it will be necessary to sink below it. When the rock is very wet, strong concrete should be used to fill up the bottom portion of the trench.

The puddle used should consist of strong, tough clay, soft, miry clay being quite unsuitable. Great care should be taken that it make a perfectly water-tight joint with the bottom of the trench. To ensure this when the foundation is solid rock, the latter is commonly cut into grooves or steps running parallel with the centre line of the embankment. When the trench has been filled up to the surface of the ground, the embankment may be commenced. The construction of these embankments has been fully described in our article on Rivers, to which we refer our readers. It is necessary to remark, however, that when a puddle-wall is used, it should be supported on both sides by a wall of the same thickness of strong and carefully-selected materials. All soft material should be removed from the site of the embankment, and if the site be on sidelong ground, it should be carefully benched and levelled. The water slope is usually 1 to 3, and is protected by stone pitching in the way described in the article referred to above. Sometimes a wall of masonry is used instead of an embankment. Such walls have been described under Dams and Retaining Walls.

Previous to the failure of the Dale Dyke at Sheffield in 1864, the outlet was generally by a culvert under the embankment. This culvert contained a pipe or pipes which passed through a water-tight stopping in the culvert, and it was of sufficient dimensions to admit of the access of workmen. The down-stream end of the culvert was open, and often provided with wing-walls, which sustained the thrust of part of the outer slope of the embankment; the up-stream end was usually closed with water-tight masonry, through which the lowest or scouring outlet-pipe passed. In numerous instances a tower was built on the inner end of the culvert, near the foot of the water-slope, to contain outlet-pipes for drawing water from different levels, with valves and mechanism for opening and shutting them. These valves were usually only short pipes extending through the walls of the tower, and furnished with sluices. When so situate, the tower is reached from the top of the embankment by a light foot-bridge. Sometimes the tower was imbedded in the embankment, and was then called a valve-pit. If the reservoir was for a town water-supply, the culvert contained two outlet-pipes, one at the lowest working level, and the other on a level with the bottom of the reservoir. The latter pipe is intended for scouring purposes only. This outlet by culvert is to be found in many of the existing reservoirs. It is, however, open to the grave objection of weakening the embankment. It is usually placed at the point where the height of the bank is greatest, and as it crosses the puddle-trench, which is filled in with a soft, yielding material, that sinks away from it in time from settlement, it is liable to fracture. Even when an arch is thrown over the trench to give support to the culvert, the puddle is weakened by being pierced, and the settlement of the whole embankment is seriously interfered with.

Since the accident above referred to, the culvert has been abandoned in favour of a tunnel driven round one end of the embankment through solid ground, or even beneath the bank. When the tunnel passes round the end, a valve-shaft is constructed in a line with the puddle-trench from the tunnel to the surface of the ground. The tunnel at the bottom of the shaft is in some cases filled up with a plug or stopping of water-tight masonry, the chamber at the junction of the tunnel and the shaft being made somewhat larger than the rest of the tunnel to allow the plugging to be well keyed into the sides. The outlet-pipes and valves are inserted in this stopping. There are two outlet-pipes, as in the culvert, and it has been recommended that each should be provided with two valves, one of which should consist of a pipe extending to the top of the shaft, and furnished with grooves capable of receiving an ordinary sluice or paddle. This paddle could thus be lowered into the outlet-pipe in front of the other valve, which might be of the ordinary spindle kind, and in the event of an accident to the latter, the paddle could be lowered, and the valve taken out and repaired, the supply in the meantime being continued through the other pipe. The portion of the tunnel between the valves and the reservoir should be lined with brick to prevent detached pieces of rock from dropping and being carried to the valves.

7299.

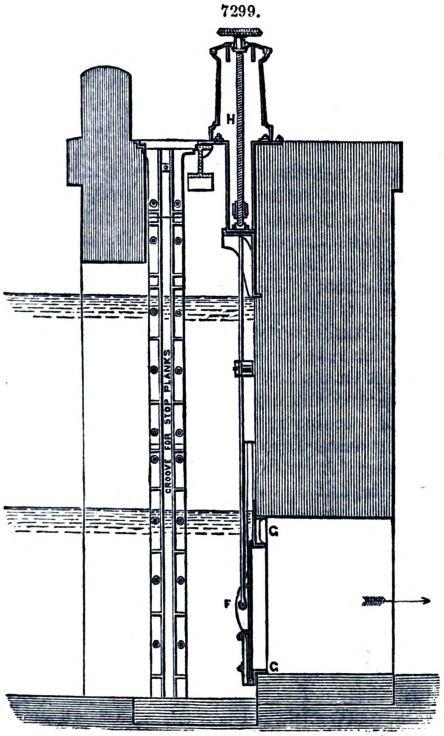

7300.

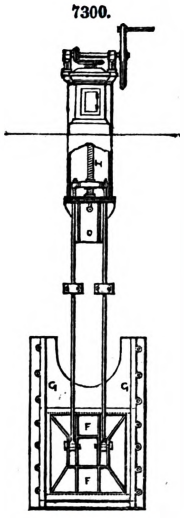

7301.

One of the inlet-sluices used at the Glasgow Water-works is shown in Figs. 7299 to 7301. The water is first admitted from the lock into a basin 55 ft. long by 40 ft. wide inside, through three cast-iron sluices each 4 ft. square. Across the middle of the basin is fixed a line of strainers, to keep fish and floating objects from passing into the aqueduct from the lock. The cast-iron sluice-plate F is faced with brass and works against brass faces on the cast-iron frame G, which is securely let into the masonry and is furnished with guides to keep the sluice F in its place. The sluice is raised and lowered by means of the iron screw H working in a brass nut, the screw being turned by a crank and bevel-wheels at top.

The overflow or waste weir is essential to the safety of every reservoir. It is a weir at such a level and of such a length as to be capable of discharging from the reservoir the greatest flood discharge of the streams which flow into it. Knowing this discharge, and allowing a maximum depth of say 6 in. over the weir, the length of the latter may be easily calculated. The weir should be built of ashlar or square hammer-dressed masonry. Instead of a weir, what is known as a waste pit is in some cases used; this is a tower rising through or near the embankment to the top water-level, into which the waste water falls, and is carried away by a culvert at the bottom. But as such a tower can seldom have a sufficient extent of overfall, the safety it affords is questionable. The water that flows over the waste weir is conducted away to the natural water-course by a by-wash or channel. This by-wash may be much narrower than the weir, as the water may flow through it with an increased depth. In all cases the by-wash should be cut round the end of the embankment, and not brought over the embankment itself. Sometimes it is cut to take the flood waters without allowing them to pass into the reservoir, and this plan is preferable for several reasons. Usually the waste weir is segmental in form, and a fall of 1 or 2 ft. is allowed on the down-stream side. To prevent too great a velocity in the channel by which the water is conveyed to the natural course, the channel should be carried along level for some distance from the reservoir. Some engineers break the floor occasionally by steps. When steps are used, the fall should not be more than 9 in., and the tread of the step should be equal to at least twice the fall. Near the reservoir, a layer of concrete should be placed under the bottom of the by-wash. Further information on these matters will be found under the head of Weirs, in the article on Rivers.

The following Table, by N. Beardmore, furnishes reliable data for estimating the storage room required;—

Water Supply and Drainage Areas

Required for various Amounts of Population, at different Rates of Supply, with a Guide to the Cubic Contents of Reservoirs, where that method of Supply is adopted.

Discharge Required.		Number of Population.			Gathering Ground Required.		Reservoir Required.
Cubic Feet a minute.	Gallons a day.	At 30 Gallons a Head a day.	At 40 Gallons a Head a day.	At 50 Gallons a Head a day.	With Stream delivering 8 cub. ft. to each sq. mile.	With 12 in. of Rain a year, or 53 cub. ft. a minute to each sq. mile.	Holding Water for 4 Months, at 53 cub. ft. a minute.
cub. ft.	millions.	No.	No.	No.	sq. miles.	sq. miles.	cub. ft. millions.
27·8	·25	8,333	6,250	5,000	3·48	·52	4·88
55·7	·50	16,666	12,500	10,600	6·96	1·05	9·76
83·5	·75	25,000	18,750	15,000	16·44	1·57	14·65
111·4	1·00	33,333	25,000	20,000	13·93	2·10	19·53
139·2	1·25	41,666	31,250	25,000	17·41	2·63	24·42
167·1	1·50	50,000	37,500	30,000	20·89	3·15	29·30
195·0	**1·75**	**58,333**	**43,750**	**35,000**	**24·37**	**3·68**	**34·18**
222·8	2·00	66,666	50,000	40,000	27·85	4·21	39·07
250·7	2·25	75,000	56,250	45,000	31·33	4·73	43·95
278·5	2·50	83,333	62,500	50,000	34·82	5·26	48·84
334·3	3·00	100,000	75,000	60,000	41·78	6·31	58·60
390·0	3·50	116,666	87,500	70,000	48·75	7·36	68·37
445·7	4·00	133,333	100,000	80,000	55·71	8·41	78·14
557·1	**5·00**	**166,666**	**125,000**	**100,000**	**69·64**	**10·52**	**97·68**
668·6	6·00	200,000	150,000	120,000	83·57	12·62	117·21
780·0	7·00	233,333	175,000	140,000	97·50	14·74	136·75
891·4	8·00	266,666	200,000	160,000	111·43	16·82	156·28
1,002·8	9·00	300,000	225,000	180,000	123·11	18·92	175·82
1,114·3	10·00	333,333	250,000	200,000	139·29	21·02	195·36
2,228·6	20·00	666,666	500,000	400,000	278·58	42·05	390·72
3,343·0	**30·00**	**1,000,000**	**750,000**	**600,000**	**417·87**	**63·07**	**586·08**
4,457·3	40·00	1,333,333	1,000,000	800,000	557·16	84·10	781·44
5,571·6	50·00	1,666,666	1,250,000	1,000,000	696·45	105·13	976·80
6,686·0	60·00	2,000,000	1,500,000	1,200,000	835·74	126·15	1,171·16
7,800·3	70·00	2,333,333	1,750,000	1,400,000	975·04	147·18	1,367·52
8,914·6	80·00	2,666,666	2,000,000	1,600,000	1,114·33	168·21	1,562·88
10,029·0	90·00	3,000,000	2,250,000	1,800,000	1,253·62	189·23	1,758·24
11,143·3	**100·00**	**3,333,333**	**2,500,000**	**2,000,000**	**1,392·91**	**210·25**	**1,953·60**

Of the Inclination and Section to be given to Feeders and Conduits.—When a certain quantity of water has to be conveyed by means of feeders and conduits, the first question that presents itself is, the determination of the declivity and the dimensions of the wetted section. With respect to the declivity to be given to the work, it frequently happens that local circumstances allow it to be varied within certain limits; and in that case, the engineer must decide what is best suited to the existing conditions. Some writers maintain that the velocity of the water in a feeder should never be less than 1 ft. a second to preserve its wholesomeness. But though we do not deny that in this respect a considerable velocity is an advantage, we think it would be unwise to make great sacrifices to obtain it. A stream having a velocity of only 9 in. a second would travel twelve miles a day; and if the feeder were of that length, or even twice or three times that length, the passage of the water in the stream would correspond to a storage of one, two, or three days in the reservoir; and as it is kept completely stagnant in reservoirs a much longer time than that, we fail to see how it could become corrupted in so short a space of time. From this point of view, a much lower velocity than 1 ft. a second may be allowed, especially in conduits of masonry. Rankine, however, places the limits to the velocity at 4 ft. and 1 ft. a second, because above 4 ft. small stones will be carried along; and below 1 ft., the conduit will silt up. It may be mentioned here that the *Aqueduc de Ceinture* at Paris, which distributes the water of the Ourcq, has a perfectly level bed, the water flowing in it in virtue of the declivity established at its surface. The most substantial advantage of the declivity is to reduce the section of the water-channel, and consequently the expense. But this advantage is very small for slight variations of declivity. Thus, for an increase of declivity of $\frac{1}{10}$, the section is diminished by only $\frac{4}{100}$; and for certain forms of section this diminution would not lessen the expense at all. It may be added, too, that when the water brought by a conduit has to be distributed by means of force mains, the diameter of the mains must be increased in proportion to the insufficiency of the head; and thus the saving effected by increasing the declivity of the conduits may be lost in the increased expense of the mains. As the course of a water-channel must depend in a great measure on the natural features of the ground, the question of the declivity cannot be submitted to algebraical laws. It is an eminently complex question, like that of the gradients of a road, or of railways. The engineer cannot, any more than he can in these cases, confine himself to limits of declivity, or to a uniform declivity. Throughout the course of the channel, the declivity and the section must vary with the inequalities of the ground; but, of course, as every variation of these quantities is in itself an objectionable feature, there must be a sufficient reason for making it. It must be kept in view that the problem to be solved is, how to convey a given quantity of water from one point to another with the least possible expense. And the solution of this problem will depend in a great measure upon local circumstances.

Artificial water-channels are of two kinds, those the sides of which are of earth, and those which are constructed of masonry; the latter are more usually called conduits or aqueducts.

Artificial Water-channels without Masonry.—Water-channels without masonry are only suited for conveying large quantities of water. It is indispensable that they should have a sufficiently large section, to avoid any interruption of the flow by accumulations of aquatic vegetation, deposits, or accidental slips in the banks. They require frequent cleansing; and a certain amount of water is lost by evaporation and filtration. It is also requisite to retain a path along their banks to enable them to be kept in a proper state. The water is liable, too, to get heated by the rays of the sun when its volume is small. But if a large quantity of water has to be conveyed, these disadvantages sink into insignificance, compared with the economy of this system of construction. When, however, local circumstances and the wants to be supplied demand only a very small section, it will be in nearly all cases best to have recourse to a channel of masonry, or even to an underground conduit, which will effectually protect the water from the accidents to which we have alluded. We do not exclude unbricked water-channels from a project of water-supply; but they should be used only for large quantities of water. It must be remembered, too, that when the channel is in a deep cutting, the sides have a large extent of surface; and this, in some soils, entails considerable expense.

Water-channels of this nature are more particularly connected with navigable works, of which they are nearly always an essential accessory. We may here caution the engineer against the method of calculating the loss of water by filtration by the square yard of surface, as is done in the case of navigable canals. This method, which we believe false in principle, does not lead to any sensible error when canals are compared with each other; because these canals have in general sensibly equal wetted sections and water surfaces; but it might lead to grave miscalculations if applied to water-courses of small dimensions, such as those suitable for a town water-supply. The permeability of the soil will have a much greater influence than the dimensions of the water surface. The loss by filtration in canals ought not, therefore, to be considered proportional to their breadth. Hence it follows that, for narrow water-channels, the loss will be relatively much greater; and as the cost of puddling or walling is evidently proportional to the breadth, there will be more inducement in the case of the narrow channel to undertake these works.

Stone or Brick Conduits.—Many works have been written on the stability of structures in stone; arches of various forms, with their abutments and piers, have been submitted to calculation; and sufficiently accurate rules have been laid down to serve as guides in these matters to engineers. But the case of these structures being at a greater or less depth beneath the surface of the ground has been almost wholly neglected. The stability of retaining walls is only a particular case of the thrust of earth. The numerous underground ways which the construction of canals and railways necessitates at the present day offer an application at least as important of this theory. It would be beyond the scope of this article, however, to supply this want; we shall therefore consider merely the question of conduits, which, from their nature, are of small dimensions.

These conduits always consist of a bed and two side walls, covered with flagstones when narrow, and with an arch when of a certain breadth. If we suppose such a structure as this erected on the surface of the ground, all its parts must have certain dimensions, in order that they may not give

way either inwards or outwards. These dimensions would still be given to the parts, if the arch, instead of being above ground, were in the middle of an artificial embankment, because the earth of which such an embankment is composed is liable to slip away sufficiently to let the arch down between the walls. It is for this reason that in making roads or railways the same dimensions are given to the arches and abutments of the small bridges situate in an embankment as if these structures were situate above ground. The saving that might be effected by utilizing the thrust of the earth is here not taken into account. This saving would, moreover, be small, as the works themselves are of small extent. But when sewers and conduits several miles in length have to be constructed, the importance of giving to the masonry only that thickness which is strictly necessary, and of choosing a suitable form of section, will be seen at once.

In general, in every piece of tunnelling there is a minimum necessary free space. In the case of a railway or a canal, there must be room enough for two trains or two barges to pass each other in a certain position with respect to the axis; in the case of a sewer or a conduit, we have a wetted section with sufficient space for the passage of a man, either upright or in a stooping posture, either dry-footed or in the water. In other words, we have a polygon of a given kind and size to be enveloped in an intrados curve, subject to no other condition than that of giving the minimum cost of construction. Sometimes the polygon is not so fully determined as in the cases just cited. In a sewer, for example, where the flow requires a sectional area of 3 sq. yds., and the work of cleansing and repairing a minimum height of 2 yds., it is evident that this double condition may be satisfied by rectangles of very different heights and breadths. It is therefore requisite to know which are, in general, the most economical forms.

The cost of constructing a subterranean passage consists of two parts, that of the masonry, and that of the excavation necessary to obtain this masonry. We will consider each of these separately. A tunnel cannot give way outwards. We are not speaking of the exceptional case of loose earth, or earth liable to be loosened by the action of water; these are rare circumstances, demanding special precautions. But generally the soil met with is stable, and only slightly compressible, so that the surface of the extrados of the tunnel is subject throughout to a variable pressure perpendicular to its surface. If the walls of the tunnel are in equilibrio, by reason of the dimensions given to the several parts of the extrados, it is clear that its outer surface will be subject to no other pressure than that which was exerted upon the mass of earth which previously occupied the same space, for, on account of the hollow of the tunnel, its weight will be sensibly equal to that of that mass, and a giving way can only occur inwards. Suppose, now, the perimeter of the tunnel to have such a thickness that its outward thrust is exactly equal to the outer pressure of the earth; in this case equilibrium will be established, though the structure, considered alone, is not in such a condition. But it will be readily seen that this equality of action and reaction is necessarily produced, unless the earth is very compressible and the radii of curvature of the intrados very large.

Let us consider one of the most unfavourable cases, namely, that of a tunnel composed of two walls, a segmental arch with a very long radius, and a rectilinear floor, Fig. 7302. This mode of construction evidently brings a very considerable thrust against the top of the walls. If the tunnel be cut through rock, the stone N, which constitutes an abutment, will not be forced back sufficiently far to let the arch down before finding a reaction equal to the thrust Q; but if the ground were of a more yielding nature, it would very likely happen that the springings would not meet, as they were being thrust back, with a sufficient reaction from the earth in time to prevent the straightened arch from slipping down between the walls. We may add, too, that this accident would be in nearly all cases caused by the displacement of the soil rather than by its compression. The soil, pressed back by the thrust on the springings, will give rise to pressures above and below; the latter will press the walls inwards, and give them a convex form inside. But virgin soils are only in a very small degree compressible, and the settling down of structures is due more to the displacing of the soil upon which they are erected than to its compression. There are therefore two means of preventing the fall of the arch, to buttress the walls, and to give a greater rise to the arch. It is evident that we shall then necessarily find equilibrium without increasing the thickness of the masonry. By means of a greater rise we shall diminish the horizontal thrust, and at the same time extend the limit which the joint of rupture may reach without causing the fall or deformation of the arch. By buttressing the walls, we shall prevent the springings from being forced apart.

7302.

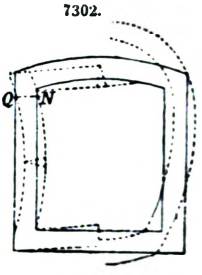

Hence it follows that by giving the inner section of a tunnel a concave form throughout its perimeter, the condition of equilibrium may always be attained with very thin masonry. In order to submit these forms to a vigorous calculation, it would be necessary to know the pressures exerted upon the surface of a solid buried in the earth. But this is a very complicated problem, and one that could be solved only by means of a great number of hypotheses on the friction and cohesion of soils, and the elasticity of the body compressed; that is, data which have not yet their expression in figures, and which consequently are of little practical interest. We shall merely remark that the pressure upon the extrados of a tunnel depends but little on its depth beneath the surface; a careful consideration will show that the upper soil tending to slide upon the slopes of greatest thrust, C D and C' D', Fig. 7303, supports itself upon the vertical plane A B passing through the axis of the tunnel, so that the portion B C may, even for a certain height, varying with the degree of cohesion of the soil, stand without support. It may therefore be admitted generally that the pressure due to the thrust is very little; the truth of this is evinced by the natural caverns found in mountains, and in those which are often dug, without support of any kind, in soils having a certain consistency. We are speaking now of the natural thrust which would exist if the extrados of the tunnel were in inflexible monolith. But if the masonry thrusts outwards, it is evident that the soil will press inwards with equal energy, a reaction that must be the result of a certain com-

pression. Now, if the soil is perfectly sustained, a sensible alteration in the form of the masonry can never result from this compression. We may remark, however, that when the tunnel is constructed in a trench or cutting which is afterwards filled in, the soil resting upon the arch not having much cohesion with the sides of the cutting, there must be a greater pressure upon the top than when the arch is built underground. But this vertical pressure only serves to tighten the joints in the arch, and to increase the stability of the side walls.

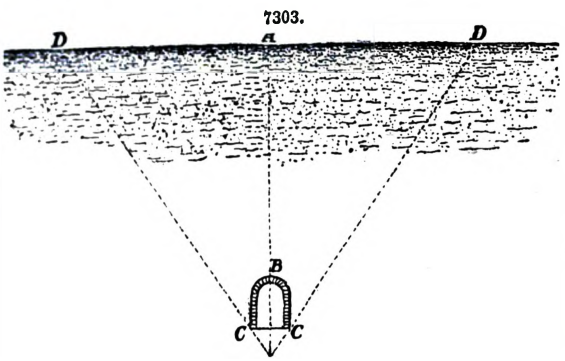

From these considerations we deduce this consequence, namely, that subterranean structures ought to be constructed according to other principles than those of ordinary structures of masonry; that by taking advantage of the reaction of the soil against any outward thrust, by choosing rational forms, and by varying suitably the radius of curvature of the intrados curve, we may considerably reduce the thickness of the masonry in works of this nature. They ought to be pipes of a nearly constant thickness in the perimeter of the section, which thickness should vary only with the diameter, that is, within certain limits of section, as the cost of masonry is sensibly proportional to the perimeter of the curve of the intrados. The cost of excavation does not follow exactly the same law; but as in ordinary cases it is only a small fraction of the total cost, we may, as an approximation, generalize the principles, especially when we are drawing only general conclusions.

When, therefore, a determined section is required, a slightly elliptical form is to be chosen. An exaggeration of the height would cause extra expense, except in the case of a very deep trench.

Of Different Kinds of Culverts.—Culverts may be divided into three classes, according to their dimensions; those which furnish a passage for the water only, those which are sufficiently high to allow a man to walk up them, and those which are provided with pipes for the conveyance of the water, so that a man may pass through dry-footed. We shall briefly consider each of these systems, and the circumstances that may render one or the other of them preferable in a given case.

Culverts having dimensions sufficient only to afford a passage for the water are evidently the cheapest. If a wetted section of 12 in. by 6 in. or 8 in. is sufficient for the discharge, if the nature of the water is such that no cleansing is required either in consequence of impurities or calcareous deposits, and if the course is not situate in a deep cutting, this system will offer the greatest advantages. In case of accident, by means of man-holes situate at certain intervals, the locality of an injury may be proved to be between two of them; then by digging midway between them, and again midway between this point and the man-hole, the exact locality may be discovered. But small leakages at several points might take a long time to discover, and would entail great expense. A coating of cement has peeled off and blocked up the passage; small cracks, which singly are unimportant, but which, being repeated throughout a long distance, are collectively the cause of a great loss of water, such things may occasion a long search and a heavy outlay for repairs. These culverts, however, appear very suitable for the conveyance of small quantities of water.

We stated above that the pressure at each point of the perimeter is unknown, but it is easy to see that it must be greater in the vertical than in the horizontal direction. The curve of equilibrium must therefore affect the form of an ellipse, greatly elongated or approaching the form of a circle, according as the soil possesses greater or less cohesion.

These little culverts may be constructed of stone, beton, or cement; or stoneware pipes may be substituted for them. The choice between these several modes depends on circumstances and local resources. The thickness to be given to the walls is so little as to elude calculation. In such small sections, a giving way inwards can hardly occur; the only accident to be feared is a sinking of the soil,—occasioned, not by the weight of the structure, but by filtrations escaping from it. It would therefore be dangerous to construct these culverts upon an embankment. As to virgin soils, it must be left to the engineer to determine on the spot what special precautions are to be taken. We may remark, however, that, in most cases, it will be sufficient to ram the bottom of the trench. The proportions of the wetted section may be varied to satisfy given conditions. In many parts, materials may be found very suitable for making slabs or flagstones to form the top, which will dispense with arching; in such a case, the breadth will be limited to the dimensions required to utilize these materials. If it is desirable to keep out the water of the soil passed through, the joints of these stones must be cemented. A rounded form for the bottom of these culverts is favourable to the velocity of the water, and facilitates cleansing when necessary. A coating, or layer of cement, laid on thicker at the angles, has been found very suitable for giving this form.

When, in consequence of the exigencies of levelling, a culvert has to be placed at a great depth beneath the surface, the foregoing system loses its advantages in several ways. Suppose, for example, that, for an ordinary trench from 3 ft. to 6 ft. deep, the cost of the small culvert is 10*s.*: it will increase to 20*s.* or 30*s.* in that portion for which a deep cutting is necessary. In such parts it is requisite not merely to deepen the trench, but to widen, and plank, and strut it. Hence an enormous increase of cost, which will be the same for the small as for the large culvert; so that the relative cheapness will no longer compensate the defects pointed out, especially as the position of the culvert will greatly aggravate them. For instance, it will be almost impossible to ascertain the locality of a leakage at such a depth. Therefore, in a deep excavation, the culvert must be sufficiently large to be accessible on the inside. The question

then is, What dimensions are strictly necessary to give this advantage? The example of the culvert at Dijon, Fig. 7304, constructed by the famous hydraulic engineer, Darcy, proves that 2 ft. 11½ in. in height, by 1 ft. 11½ in. in breadth, is quite sufficient to allow a man to pass up it without excessive fatigue. It must be borne in mind, that it is not a case demanding a daily or even a monthly examination; all that is required is for a man now and then to pass up with a torch to examine every part; and by making use of the man-holes, he may rest as often as he likes. The mean term taken by Darcy appears to us, therefore, perfectly rational. In virtue of these dimensions, the culvert at Dijon possesses, for the security of the distribution, the same advantages as those of the largest dimensions; its defects are a mere matter of service, for which the public have not to suffer; a question of paying a small sum yearly to the man whose duty it is to pass through the culvert occasionally in water-tight boots. To render this culvert capable of being easily traversed by a man upright, the side walls would have had to be 3 ft. higher; and this, from the dimensions adopted, would have required an additional cube of brickwork, equal to 28·25 ft., and, with the earthwork, involved an expenditure of at least 8*s.* a yard, say 5600*l.* for the whole length of nearly 7¾ miles. To effect such a saving as this, an occasional inconvenience will be cheerfully borne. We must remark, however, that, had the egg-shaped section been adopted, a greater height would have been given at the same cost, by diminishing the thickness of the side walls, Fig. 7304, which would have greatly facilitated the passage of the inspector.

7304.

Another advantage of this kind of culvert is its capability of conveying a variable quantity of water, whilst the small ones would be quickly destroyed if the under-pressure of the water were to burst up the arch, or lift off the top stone-slabs. This defect is remedied by means of escape-holes left at convenient places. Stoneware pipes, being capable of withstanding a certain pressure, are more suitable than small culverts for the conveyance of variable quantities of water.

The essential dimension of this kind of culvert is its height; and it is evident that by increasing this we render access to it more easy; the only question, therefore, is that of cost. There are certain advantages, too, which are more or less important, according to local circumstances. In case of repairs, the workman has but little room to use his tools, or to transport his materials. If the water leaves a deposit, and the culvert requires cleansing occasionally, its dimensions must be increased. In many of the old culverts there is a raised footway on one or both sides, by means of which inspection, repairs, and cleansing may be executed without standing in the water. This is no doubt an advantage; but whether the additional cost is compensated by the convenience afforded, is open to question.

Critical Examination of Two Culverts.—We will complete these general considerations by making a critical examination of two culverts recently constructed in the interior of the city of Paris.

A glance at the section represented in Fig. 7305 shows that the engineer has wholly left out of consideration the subterranean position of the structures, for the brickwork has a thickness more than sufficient for equilibrium if erected above ground. In this order of ideas, the offsets, allowing them to be necessary to the stability of the structure, would yet be a mistake, for by raising the side walls vertically from the perpendicular of the last offset, the breadth of the water-passage and footway might be increased by 7·8 in. without diminishing in the least degree the mean thickness of the brickwork; or if this additional breadth of the water and footways were deemed superfluous, the offsets might have been suppressed, and the same thickness of brickwork retained, which would have reduced the breadth of the trench. For we must not lose sight of the fact that an offset, though it may be only a few inches high, necessitates the same width of trench to surface, thus occasioning great additional expense. We think, therefore, it may be laid down as a principle, that a culvert built in a trench should never have offsets.

7305.

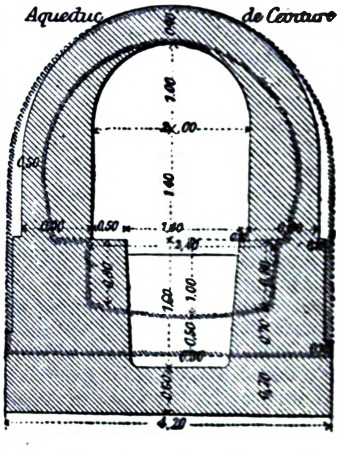

If, now, we examine the form of the water-way, we shall see that the breadth and depth are not in the ratio requisite for a maximum velocity of the water. This, however, would be a small defect if the section adopted were in the minimum conditions of cost. But we see at once that in consequence of the enormous thickness of the side walls, especially on the side of the footway, there is great advantage to be gained by increasing the breadth of the water-way and diminishing its height The two side walls have together a thickness of 8·53 ft., whilst that of the arch and floor is only 3·28 ft.; consequently, by increasing the breadth of the water-way by ·328 ft., and diminishing its height by the same quantity, we gain about 5·5 cub. ft. of brickwork, without diminishing the section. The proportion is therefore bad in all respects. If we increase the breadth of the water-way to 7·87 ft., reduce its mean height to 2·95 ft., and then raise above the footway a more rational profile than the existing one, we shall effect a saving of about 135 cub. ft. of brickwork and 85 cub. ft. of excavation, representing a sum of about 4*l.* a yard, or 16,000*l.* for the whole work, while retaining the raised footway and the ledge on the inside intended to support a flooring of planks in case of repairs. The modified profile shown in Fig. 7305 in dotted lines gives at once much more air and room in the portion above the water, and a sufficient breadth to allow the passage of a good-sized boat, with a diminution of weight upon the foundations and of height of water upon the floor, that is, with fewer chances of filtrations. If we were to enter further into the examination of this culvert, and discuss the utility of the ledge mentioned above, and that of the raised footway, which might be suppressed altogether, or replaced

by a plank supported upon cast-iron brackets, we should arrive at still more economical forms. We will merely add, however, that the culvert, being both reservoir and culvert, that is, the water in it being alternately in motion and at rest, the section which we propose for the water-way ought to have been deepened towards the end to counterbalance the effect of the descent. But we are considering it here only as a type of culvert designed to convey a large quantity of water.

The section of the Saint Laurent culvert, Fig. 7306, appears to us at least as defective as the one we have been examining; the same corrections are to be made. By reducing the height of the water-way by 2·39 ft., giving a curved form to the side walls, and doing away with the offset, we should get a form as strong as the present, more economical by one-third of the brickwork, and of suitable dimensions to allow the passage of a boat, or of a man in water-tight boots, if it were considered undesirable to have planks supported on brackets. These sections therefore ought not, in our opinion, to be taken as examples to be imitated.

7306.

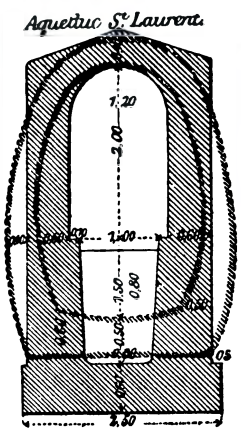

We shall not pursue this critical examination further, our only object in entering upon it at all being to show the great importance of carefully considering the form of section to be given to a culvert. It is not possible, as in the case of pipes, to give typical forms which are always to be imitated; the engineer must in every case be guided by local circumstances, the material at his disposal, and a thorough understanding of his subject. The considerations into which we have entered are not intended to remove the necessity for a careful study of the question, but to make that necessity more strongly felt.

Culverts to contain Pipes.—Most of the foregoing reflections are applicable to culverts intended to receive pipes. We shall consider later the question whether pipes should be placed in culverts at all; and though, in our opinion, it is not in general advisable, especially for a small water-supply, to construct special culverts for the mains, it is none the less true that when these culverts may at the same time serve for other purposes, it becomes expedient to place the pipes in them. A sewer, for instance, may be rendered suitable for this purpose by slightly increasing its width, and this increase of width may be effected at a small cost.

7307.

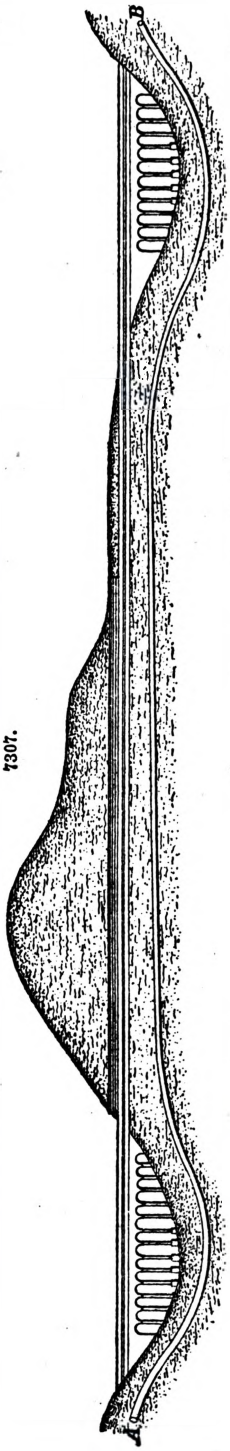

Culverts may contain one or several pipes; but, in our opinion, they ought never to contain more than two, unless different kinds and pressures of water have to be conveyed. Multiplying the number of pipes greatly increases the cost, and cannot be justified from any point of view. When a culvert is to serve at the same time as a sewer, the mains are raised upon a brick footway in order that they may not be immersed in the sewage, which immersion would conceal any escape, and render repairs difficult. To make the joints more readily accessible, the pipes rest at intervals upon brick supports. Instead of a brick footway, which takes up a portion of the section of the sewer, iron consoles are frequently employed; these possess the additional advantage of greatly facilitating the first placing and subsequent repairs of the pipes. At the same cost, this system is certainly preferable; it will be for the engineer to compare the cost of each, according to the diameter of the pipes and local circumstances.

Of the Choice to be made between Conduits and Pipes.—It remains for us now to consider the question of knowing in what cases recourse should be had to force-mains and to free culverts, or, as they are often called, conduits.

If we consider the problem of conveying water in an abstract way, both systems are applicable in every case. A line A B, Fig. 7307, being given, we may adopt any form of section for a conduit having a sufficient surface to convey the given quantity of water; the conduit or culvert will be constructed in a trench or in a tunnel when the water-line is below ground, and upon a wall or upon arches when above ground. As to the pipe, it may always be substituted for the culvert by placing it below the line of head, and giving it a section about $\frac{1}{10}$ greater than that of the culvert. Thus, *mathematically*, one system may in every case be substituted for the other; but, *economically*, the question is changed, and each system finds its place according to local circumstances.

When the water-line, or line of head, is below ground, the culvert possesses over the force-pipe advantages varying with the system adopted, and with the quantity of water conveyed. Suppose a small culvert having, for example, a wetted section 12 in. × 6 in.; if we wish to substitute a pipe for this it must have a diameter of about $9\frac{3}{4}$ in. This will cost about 20*s.* the yard run, whilst the little culvert will hardly cost 8*s.* If the culvert is a little larger, and its useful section doubled by making the side walls 6 in. higher, the cost will be increased by not more than two or three shillings a yard, whilst the diameter of the pipe would be increased to $13\frac{3}{4}$ in., and the cost to about 28*s.* The saving would

thus be about 18*s.* the yard. But if for so small a quantity of water a culvert were constructed large enough for a man to enter, this saving would vanish, and there would be an excess of expenditure instead, for it would be difficult to construct a culvert for less than 30*s.* On entering this system the relative economy diminishes, because the wetted section is only a small fraction of the whole. Suppose in a culvert of this kind, having a breadth of 1·97 ft., the depth of water to be 1·30 ft., the wetted section will be 2·5 ft., and we might substitute for this culvert a 2-ft. pipe. Thus it will be seen that if the culvert cost 33*s.*, the saving is only a third of the total expense. It will be greater if we suppose a greater height of water in the culvert; but in that case it will be difficult to enter it while in use; such would be a culvert of the first kind. As to culverts like that of Arcueil, Fig. 7308, which convey only a small quantity of water, and may be passed through dry-footed by men in the upright posture, they are much more expensive than pipes. The difference diminishes, it is true, with the quantity of water, but we doubt if it can ever become nothing. Thus the first of the two culverts at Paris, which we have already critically examined, cost 30*l.* the yard run, and it does not exceed in efficiency three 39-in. pipes, which would not have cost half that sum.

7308.

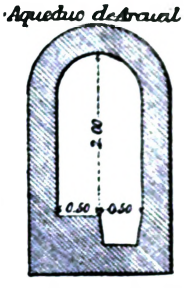

The comparison we have made is incomplete in many respects, for it does not take account of many elements that may derive great importance from the conditions in which the engineer finds himself placed. We will remark, in the first place, in favour of the culvert, especially that kind which is large enough to be accessible, that it offers much more security for an uninterrupted service. Probably to obtain the same degree of security from pipes, they would have to be doubled, which, as we have said, greatly increases the cost, in the ratio of 1 to 1·56. Also, if the water forms calcareous or other deposits, the work of cleansing can be performed much more easily and at much less expense. But this advantage is of small importance, for water charged with such a quantity of carbonate of lime ought not to be used.

The considerations in favour of pipes are of another kind. We have supposed them laid down in the track of the conduit; but that supposition is too unfavourable, since a force-pipe is in no wise restricted to follow the developments of the line of head over the ground. To convey water from Uzès to Nîmes, the Romans were obliged to construct an aqueduct 31 miles long, though the towns are situate only 12½ miles apart. We see that a force-pipe would have been only half that length; hence two savings, that of length and that of diameter, resulting from the increase of declivity to the yard. The diameter might, indeed, have been reduced in the ratio of 1 to 0·87. Again, for the reason that the conduit must of necessity follow the line of head, and all the windings of the soil, it is often requisite to pass through valuable lands, the owners of which have to be paid compensation, whilst the force-pipe, which is subject to no other condition than that of being situate below the line of head, may be placed in the streets, in the roads, or other public properties, where no compensation is required. This liberty of choosing a course enables supplies to be given on the way, and thus the utility of the service is increased.

The course or track of a conduit is subject to more rigorous conditions than that of roads and railways, as it only admits of nearly insensible declivities, and never of counter declivities; if, therefore, it were absolutely necessary to follow the line of the soil, it would assume an excessive length. To abridge this length, rising ground is often cut through and valleys crossed by aqueduct-bridges. When the line of head is in a deep cutting, preference should in general be given to the culvert rather than the pipe; the latter would require the same trench and probably the same expense as the culvert, but being situate so far from the surface, it might fracture or the joints give way, without the accident being perceived, for the water not being able to reach the surface, could find escape only in a lateral direction. And the search for defects would be so difficult and expensive that it would be necessary probably to place the pipe in a culvert where it would be accessible at all times. It will therefore be much more simple to put the water itself into the culvert, and so save the cost of the pipe.

General Principles on the Choice of Conduits.—We must conclude, then, that the problem of the economical conveyance of water is eminently complex; and that the engineer must call to his aid, according to local circumstances, all the various systems, each of which has its proper place, but which cannot be determined by any precise rules; he may, however, be guided by the following general considerations;—

Canals are suited for the conveyance of large quantities of water through a level district.

The aqueduct is suited to moderate quantities when the level of the supply is reached by tunnelling.

Pipes are best suited for the conveyance of small quantities of water from great heights.

Aqueduct-bridges are only admissible for the conveyance of large quantities of water, and when the supply is not obtained from a great height.

Siphons should only be constructed in order to carry the supply across a stream.

It is only by a complete and detailed study that he will be able to arrive at a knowledge of the systems best suited to each particular case, and these will often have to be modified according to the resources which are at his disposal.

Hitherto we have been occupied in determining the sections, inclinations, and so on, which must be given to a conduit in order that it may furnish a certain quantity of water; this, as has been seen, is always an easy question to solve by analytical formulæ. But the distribution of water presents another question much more complex and interesting; that is, to determine the course of the conduits which will give the result sought with the least possible outlay.

Distribution of the Pipes.—In a previous article on Pipes we entered in detail into the questions relating to the manufacture, the quality, and the requisite diameters of iron pipes for a town water-supply, and we described the most approved modes of laying them, pointing out at the same

time the influence of contour of section, or position, of the pipes with respect to the horizontal. It would therefore be superfluous to introduce those questions into the present article. There yet remains, however, one other question relating to the laying of pipes that we have not considered, but which is of great importance, namely, the course of the mains, or distribution of the system of pipes. This matter is frequently made subordinate to inferior considerations. But the engineer who aims at economy and designs his plan intelligently will make it one of the objects most deserving his attention. By carefully estimating the quantity of water to be delivered at a certain point, and adapting the diameter of the pipe thereto, a considerable saving of cost may be effected. But a much larger saving will result from a good distribution of the mains. Indeed, there is hardly a limit to the economy that may be realized by a skilful distribution, nor to the expenditure to which an unskilful one may lead.

Of course, it is impossible to do more than lay down general principles; for what is applicable to one locality is impracticable in another. The necessity of laying the mains along the streets greatly limits the choice of relative positions, and leaves only a few routes open to the engineer. The choice is, however, less limited than it appears to be at first sight, a fact anyone may convince himself of by a careful study of any town map. But general principles will be of great service to guide the engineer in making this choice; for though he will seldom or never be able to follow the lines which theory requires, if he knows what these theoretical lines are, he will be in a position to approximate to them in practice as closely as circumstances will allow; and in such a case, however wide the approximation may be, he will have the satisfaction of knowing that the distribution he has designed is the best that the nature of the locality rendered possible.

As an illustration of the degree of economy to be realized by a due attention to the question under consideration, we will take a very simple example. Suppose it be required to deliver a certain quantity of water, say 200 gallons a minute, at the point a, Fig. 7309, and 100 gallons a minute at the point b, from a principal main A B. It is obvious that the most economical way of accomplishing this is to lay the pipes $a\,m$, $b\,n$. But if the points to be supplied were situate at a greater distance from the main, as $a'\,b'$, it would be far more economical to lay the secondary main $p\,q$, and to reach the given points by branches $q\,a'$, $q\,b'$. This example is almost self-evident; but cases will arise in practice where a careful calculation will be necessary to determine the question. There will, of course, be other conditions to take into account, among which the character of the ground will be the most important.

7309.

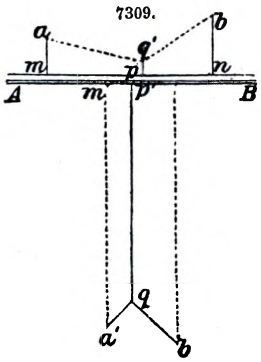

An important fact to be borne in mind in designing a distribution is, that the cost of conveying a determinate quantity of water, as a cubic foot, through pipes, decreases as the total quantity increases. Consequently there will always be an advantage in concentrating the masses of water to be conveyed, instead of dividing them among a number of smaller mains. The cost of the pipes through which the water is conveyed does not increase as the quantity of water, but only as the $\frac{2}{5}$ power of that quantity. Thus if the cost of conveying 100 gallons be A, the cost of 200 gallons will be $2^{\frac{2}{5}}\,\mathrm{A} = 1{\cdot}32\,\mathrm{A}$, and that of 300 gallons will be $3^{\frac{2}{5}}\,\mathrm{A} = 1{\cdot}55\,\mathrm{A}$. That is, if 100 gallons can be conveyed for 1*l.*, three times that quantity can be conveyed for 1*l.* 11*s.*; and so on in the same proportion.

Another question demanding attention is the intersection of branches by the mains, or of secondary by the principal mains. The position of the intersecting main should be towards that end of the branch at which the supply is attended with the greater difficulties, either by reason of the difference of level or of the quantity of water to be delivered. When the two ends are sensibly on the same level, the length of the branch should be divided proportionally to the squares of the discharge. If, for example, the delivery at one end of the branch is 100 gallons and at the other end 200 gallons a minute, the point of intersection will be situate towards the latter end of the branch at $\frac{1}{5}$ its total length from it. This condition will, however, usually require modification, as it would lead to a too circuitous route for the principal main, and so occasion additional cost in the latter. The best theoretical course will be that which without deviating from the straight line passes nearest to the points of intersection determined in the foregoing manner.

From the preceding general principles, we may deduce a typical distribution which shall serve as a guide in every case that may occur in practice. In this typical case the ground is supposed to be sensibly horizontal, of the same character throughout the district, and wholly free from obstructions. Local considerations are thus completely eliminated.

It is evident, from what we have stated above, that this district should be divided into two symmetrical portions by a principal main. We shall suppose the diameter of this main, as well as that of all the others, constant; for when we have solved the problem according to this hypothesis, it will be a simple matter to vary the diameters in accordance with the quantities to be delivered. Thus the question is reduced to that of distributing the water upon one side only of a main considered as an inexhaustible reservoir. Evidently the distributing pipes must be supplied from mains perpendicular to the principal main; what we have to determine is their positions, lengths, and diameters. For greater simplicity and clearness, we will consider one of these mains B D, Fig. 7310, separately. A moment's reflection will show that the limits of the area which should be supplied from this main will be given by the lines B M, B N bisecting the right angles at B which B D makes with the principal main; for according as a point is situate to the right or to the left of the bisecting line, it will be nearer the principal or the branch main. The branches from B D and B C, as $a\,q$ and $a\,p$, should therefore never extend beyond the line B M, because such an extension would involve a waste of pipe. Hence it follows that upon the line A B C there should be no other

branch of the same importance as B D, that is, of the same diameter, until we reach a distance from B equal to B D, or in other words, until B C = B D. The area of this new branch will be similarly limited by the bisecting line C D, this area being C *m* M, as that of D B is B *m* D, and that of B C is B *m* C. If these three isosceles rectangular triangles are so large as to make it necessary to have

7310.

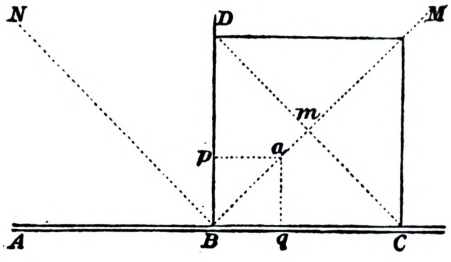

7311.

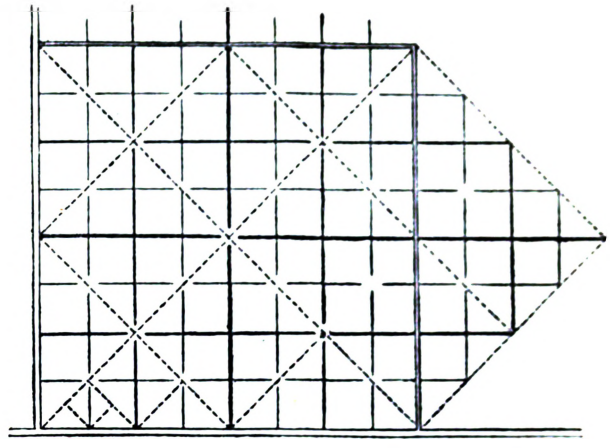

other branches, it is obvious that they should divide the bases B D, B C, and C M into two equal parts; for if they do not occupy that position the cost of the secondary branches will be increased, as we have already demonstrated. If this reasoning be continued throughout the district, we shall obtain the typical distribution sought, which distribution is represented in Fig. 7311. In this diagram the importance of the several lines of pipe is shown by graduating the thickness of the lines, the thinnest lines representing the pipes that supply the smallest areas. These areas, which are shown by dotted lines in the diagram, are squares constructed upon the pipes as diagonals, and they increase by geometrical progression, the ratio of which is 4. Hence it may be shown, that if the diameter of one series of pipes be *d*, that of the next larger series will be 1·75 *d*. Also it may be seen from the diagram that the length of one series of pipes is always double that of the preceding series, as it has to connect all the other series.

A knowledge of the general principles which we have been discussing, and which are illustrated in this typical distribution, will enable the engineer to design his system in the most economical way compatible with the conditions imposed on him by the circumstances of a given case.

It is evidently impossible to foresee all the cases which may arise in practice, and to apply to them the general principles which we have just explained; but we can, at least, facilitate the research by a few examples, showing the advantages and inconveniences of the various means which may be adopted.

Let us suppose the water brought and raised to a certain point O, Fig. 7312, which we will call the point of distribution; the level of this point will, of course, rule the height of the service-pipes. For engines forcing the water directly into the ascending pipe, this point should be considered as being situate at the height which would be given by a manometer placed upon the pipe. The point of distribution may be situate either within the boundary of the district to be supplied, or outside it; it will evidently be sufficient to examine the latter case, which will in its application include the former; as when the point of distribution is situate outside the district to be supplied, the first thing to be done is to carry it inside by means of an aqueduct or conduit.

7312.

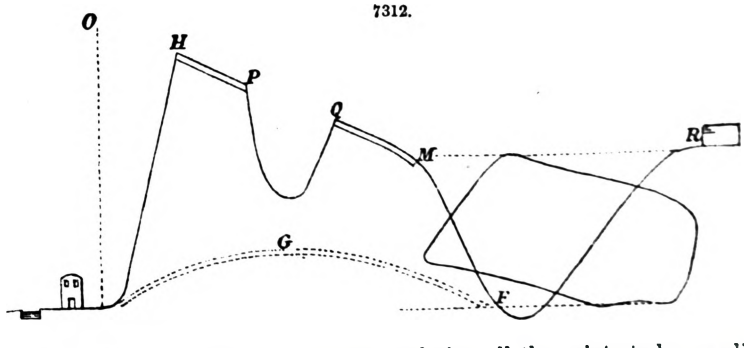

Let A B C D E F, Figs. 7312, 7313, be a polygon enclosing all the points to be supplied, and O a point on the outside, from which the water must descend to all these points. The water raised by an engine may be conducted by an aqueduct, when there is situate near the engine a hill

running in the direction of the district to be supplied. We must then make the ascending pipe discharge at such a height on the summit of the hill as will allow the aqueduct to have sufficient fall.

7313.

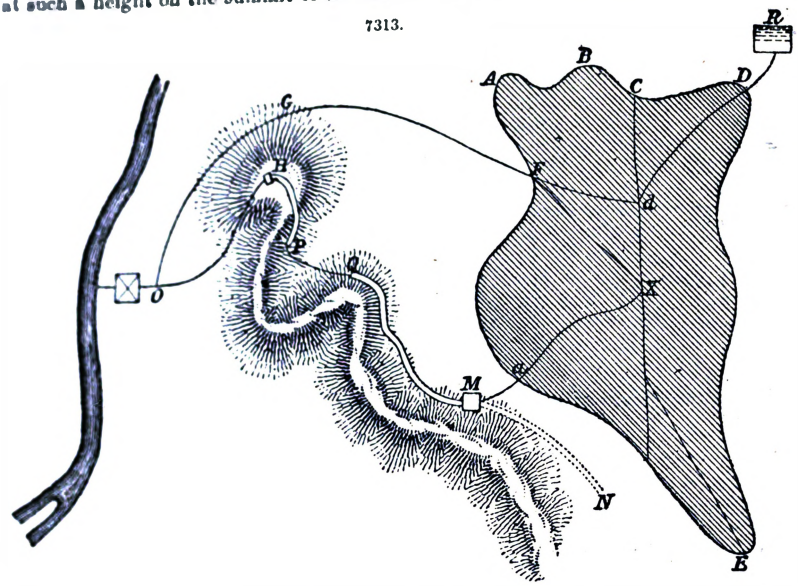

Determination of the Diameter of the Ascending Column.—Whether we adopt this latter arrangement, or conduct the pipe as far as the boundary of the district, there is always a first pipe, the diameter of which is arbitrary. In practice, whatever may be its dimensions, we can always obtain from it the head necessary for the discharge of a given quantity of water, by means of a more powerful engine and a larger consumption of coal. Thus, if we had to raise 3 cub. ft. of water a second a height of 165 ft. by means of a steam-engine, and if the diameter of 16 in. gives a loss of head of 35 ft., the problem will evidently be solved by an engine of 65 horse-power, the cost of which can easily be calculated; and it would be the same for a pipe of any diameter, as, for instance, one of 12 in. giving rise to a loss of head of $35\left(\frac{16}{12}\right)^{\frac{3}{5}} = 41{\cdot}8$ ft., will require an engine of 71 horse-power, with a corresponding consumption of coal. The question to be determined is, Will the saving effected in the rising main compensate for the extra cost of the engine? In a word, in every question of this nature, the object sought is to find the diameter which will give the minimum of expenditure.

Limit of the Aqueduct at the Boundaries of the Distribution.—As we have already said, the water, on leaving the engine, may be conducted directly to the boundary of the district to be supplied, either by a pipe or an aqueduct. If the district is suited to the combination, the aqueduct may be prolonged to the point where the force-main commences to present advantages. But it is evident that the aqueduct can only be carried over the boundary-line of the district on an embankment, as it must of necessity be above the surface which it has to supply. We shall therefore be obliged to arrest this work at a certain point M, Fig. 7313, near to the boundary, and from there start the force-main. The nature of the district will sometimes admit of the aqueduct being prolonged parallel to the boundary, in such a manner that most of the service-pipes can start directly from it. But before adopting this course we must carefully examine the expense to which it will lead. In fact, the development M N of the aqueduct, and the length of the branch-pipes outside the boundary, will be altogether lost for intermediate service; and it is rarely that we cannot obtain a more advantageous arrangement by starting directly from M with a force-main, for this pipe, distributing the water to right and left, will allow the branches to decrease in length and diameter.

Necessity and Position of Distributing Reservoirs.—It is hardly possible for a distribution of water to be carried on without a reservoir; for the consumption is variable, whilst the supply is constant. The water brought by natural courses, or raised by hydraulic machinery, is constant during the twenty-four hours; whilst the consumption in general goes on only during twelve hours; and during these twelve hours the consumption is not regular; so that, even with steam-pumping machinery, we are obliged to have a reservoir in order to prevent waste of water, the supply of which, at certain moments, exceeds the consumption. Besides this, a reservoir allows of the machinery being stopped for repairs, without interfering with the service. It is, then, almost indispensable; and the only question to be decided is its situation and capacity.

If the reservoir were placed at the head of the aqueduct towards H, Fig. 7313, the dimensions of the aqueduct should be such that it will discharge, not the product a second of the engine or spring, but the maximum consumption a second. But this consideration would often greatly increase the cost of the aqueduct; and more than this, any accident or repairs among the network of service-pipes would interrupt the service. If the reservoir were placed towards M, its position would be better. The aqueduct, reduced to a minimum section, and consequently to a minimum cost, may be, according to the capacity of the reservoir, closed for a greater or shorter time, without interrupting the service; but as the pipe M X *d* D R from the reservoir must be of sufficient diameter to discharge the maximum consumption, any repairs at X would stop the service.

If, on the contrary, the reservoir were placed at R, the end of the principal conduit, whatever

accident might happen, it would only cause a suspension of the service between the nearest neighbouring stop-cocks. Besides this, as the pipe M X *d* D R is fed from both sides during the time of the greatest consumption, its diameter may generally be much smaller than in the preceding example. The extreme end of the principal pipe, which traverses the boundary, is then the position which best satisfies the conditions of a good distribution; but several circumstances will often interfere to cause us to prefer another situation. The cost of the reservoir, which, as we have already seen, varies considerably, according to the nature of the surface of the district, is one of the most important. If, for example, the level at R, sensibly below M, only allows of the construction of a reservoir to carry on the distribution during the time that the direct service is interrupted, we should, in that case, only erect a reservoir to take the surplus water during the time that the consumption is at its lowest. It should be borne in mind, when making comparison between the various systems of distribution which may be adopted in any particular case, that the principal reservoir should be placed at a sufficient height to command all the orifices of discharge; and that it is advantageous to place it at the end of the main, which starts from the origin of the supply, and traverses the boundary of the district.

Concerning the capacity of the reservoir, it cannot be too large; for the larger it is, the longer the time during which repairs may be carried on without interrupting the service; its capacity will be determined by the facilities which we have for its construction, and the chances of interruption to which the supply is liable; and we have to determine upon a minimum. The same may also be said of the height and the depth: the overflow cannot be too high, nor the bottom too low. The height will be limited, either by the level of the source or the power of the engine, and the depth must be such that it will still be able to supply the highest orifices when the water has descended nearly to the bottom.

Instead of one reservoir, we might have several. Thus, one might be placed at M, another at N, and another at C; in these two latter positions they would have the advantage of increasing the power of the conduits at the ends of which they were placed. It is well in all cases to reserve to ourselves the power of adding fresh reservoirs to the system, according as necessity shall call for them.

The considerations which we have just been explaining apply with equal force to the case where the water is brought from the source O by means of a force-pipe O F G. But then we shall have to consider if it will not be better to divide this conduit into two pipes of equal diameter, so that in case of repairs the service may not be interrupted. Bearing in mind that one of the effects of this arrangement will be an increase of ·45 in the cost of the rising main, we shall have to determine whether the advantages of the system will be a sufficient compensation for this increase.

Purification of Water.—For this section we are entirely indebted to the writings of Ernest Theophron Chapman. Chapman observes that waters contaminated with animal and vegetable matters are purified in nature by the gradual oxidation of their organic matter, aided by subsidence, and, in some cases, by filtration through porous strata. The processes of evaporation and condensation which give rise to rain are also natural methods of purification.

Water is purified artificially by distillation, filtration, and by formation of a precipitate in the water.

Distillation is seldom resorted to for drinking purposes. It is employed at sea, and we believe that on the coast of Chili sea-water is regularly distilled for domestic use. It is, however, not sufficiently used to interest us here.

Filtration is the most common method of purifying water. If a water contains solid particles of a given magnitude, and we pass that water through a wire gauze, the meshes of which are of smaller diameter than the particles, we shall, of course, separate the particles, and unless either the gauze or the particles are elastic, the rate at which the operation is conducted will have no effect on the result. But in filtration, as ordinarily conducted, speed affects the result to a very great extent. In filtering through beds of sand, we may roughly say that the effect of the filtration will be almost inversely as the speed at which the filtration is effected.

If a bottle full of slightly turbid water be laid upon its side, and allowed to stand for twenty-four hours, and then examined, it will be found that the sediment has not only deposited itself on those parts of the glass to which gravitation has carried it, but that, though thickest at the bottom, it has spread itself much higher up, and in many cases is even to be found adhering to the top part of the glass. This circumstance has doubtless much to do with filtration.

There is, however, another consideration which will perhaps be most easily explained by an example. When softening water by Clark's process, we obtain a precipitate of finely-divided carbonate of lime. If this operation be conducted in large glass vessels, we can watch this process of depositing the precipitate. If we do so, we shall observe that the first sign of clearing takes place at the top, a layer of quite clear water making its appearance, and gradually extending downwards. If we ask how this water has become clear, the only answer that can be made is, that the precipitate has moved down to the layer of water beneath it, and thereby rendered that layer thick, for had the precipitate not descended into it, it would, like the top layer, have become clear. In the same way, this second layer, by its depositing, renders that beneath it turbid. If such a vessel of water took six hours to clear, we should expect that by dividing it into six layers by means of five diaphragms, equidistant from each other and from the top and bottom of the water, that the water would clear in one-sixth the time, or one hour. On making the experiment, this is found to be the case. To test this matter more fully, what may be called a subsidence filter was constructed. It consisted of a wooden box 12 in. square and 20 in. deep, containing 24 plates of sheet zinc, $\frac{3}{4}$ in. apart. Each plate had six holes punched in it, 1 in. in diameter. The holes were near to the side, and had their edges turned up a little; the plates were so arranged that the holes were not opposite each other. A small tap came from just below the lowest plate. Another box like this, but without plates, was also constructed. Both boxes were charged with freshly-softened water, containing chalk suspended in it. The water took about eight hours to clear in the

box without the plates, and was quite clear in the one with the plates at the end of twenty-five minutes. This box of plates was next used as a filter, by sending a slow stream of water charged with suspended chalk through it. About 11 gallons an hour of quite clear water could be drawn off. If the speed was increased much beyond this the water was no longer clear. To render the analogy between this filter acting entirely by subsidence and the common sand filter quite plain, the box without the plates had a piece of coarse wire-gauze stretched across it just above the tap. It was then filled with slate chips, and water containing chalk in suspension, as before, filtered through it. The action of this filter was exactly the same as that of the plate filter, except that more water could be passed through it in an hour without turbidity. If, however, more than about 15 gallons an hour were passed through it, the water was slightly turbid, and if the quantity was increased to 20 gallons, it was quite so. Some experiments, substituting very coarse sand for the slates, gave analogous results.

Now, the analogy between the last experiments and the subsidence filter is clear; and we may safely draw the inference that a portion of the work performed by a sand filter is due to subsidence within the filter itself, the particles of sand serving as plates. This is almost proved by the fact, that we can force much of the matter removed by such a filter through it, by slightly increasing the pressure of water, which would not be the case if the filter acted as a strainer.

The common process of filtration through sand is therefore an operation comprising three distinct methods of purification:—Straining; removal of matters by adhesion to the sand; subsidence within the interstices of the filter itself.

The first method will vary with the size of the apertures through which the water passes; the second, with the amount of surface in the filtering medium in relation to the amount of water; the third will vary with the speed at which the water travels, and with the size of the aperture through which it passes.

Some filtering media are said not only to remove organic matter, but to destroy it. They are said to do this by causing the organic matter to combine with the oxygen contained in the water, and thus convert it into innocuous compounds. Foremost amongst the compounds said to possess this property stands animal charcoal. Beyond all doubt, animal charcoal has a wonderful power of freeing water from organic matter, and it does to some extent oxidize the organic matter; but whether to a greater extent than can be accounted for by the oxidation always going on in water exposed to the air, is a question which admits of much doubt.

The only process of purification by precipitation requiring detailed remark is Clark's softening process. Waters to which this method of purification is adapted are such as contain carbonate of lime retained in solution by excess of carbonic acid. The process consists of adding lime to such waters until the excess of carbonic acid is neutralized; when this has taken place both the lime added and that in solution are precipitated as carbonate, a minute quantity remaining in solution, as carbonate of lime is not absolutely insoluble in water. By this process not only is the water softened, but a very large proportion of the organic matter contained in it is removed, and if the water be coloured, the colouring matter is also entirely or in very great part removed.

The following examples will indicate to what extent the organic matter is removed by this process;—

PARTS PER 1,000,000.

		Free Ammonia.	Albuminoid Ammonia.
I.	Before Clark's process	0·01	0·05
	After „ „	0·01	0·02
II.	Before Clark's process	0·025	0·22
	After „ „	0·030	0·08
III.	Before Clark's process	0·015	0·22
	After „ „	0·020	0·07
IV.	Before Clark's process	0·195	0·12
	After „ „	0·15	0·05

It is to be observed that the organic matter removed can be proved to be present in the chalk precipitated.

The process presents so many advantages, and is so simple, that we are surprised not to see it in general use, and naturally expect to find on investigation that it has some great drawback. This, however, does not appear to be the case.

The only other methods of purification by precipitation which have been adopted to any extent are the addition of alum to the water, and the addition of a persalt of iron. In both cases the result is the same, a precipitate is formed which carries down with it a very large proportion of the organic matter, sometimes as much as three-fourths.

Filter Beds.—Two systems of filtration are in use for filtering water on a large scale, the artificial filter, and the natural filter.

The artificial filter bed was designed to get rapidly rid of that very light portion of the sediment carried by river waters, which takes some time, a fortnight or more, to subside under ordinary circumstances. This clayey discoloration, though trifling in weight, renders the water very objectionable in appearance and in its application to any of the arts or manufactures. That portion of the sediment which, from its greater weight, subsides rapidly, say within twenty-four hours, can be more economically got rid of in subsiding reservoirs. The successful use of the filter bed presupposes the preparation of the water in a subsiding reservoir. Wherever the attempt has been made to use filter beds without that preliminary aid, they have either failed altogether, or rendered the water but partially clarified. In some places, the large valley reservoirs required for compensation and flood storage perform for the filter beds the functions of a subsiding reservoir.

The materials used for filtration on a large scale are sand, gravel, and broken stone or shingle, the depth of the whole varying from 5 to 6½ ft.; a layer of shells has sometimes been used, placed within the stratum of gravel, but this is not found essential, and is now generally omitted.

It will be convenient to consider here the most appropriate size for a filter bed before giving the arrangement and thickness of its materials. The sizes in practice will be found to be very variable,

and seemingly to have followed no regular standard. The first filter beds at Chelsea proved inconveniently large, and have since in practice been divided. The new filter beds at Stoke Newington, London, the filter beds at Liverpool, and those now under construction at Dublin, are fair specimens of modern practice, as applied to large cities. For small cities it is found convenient to make the dimensions proportionally smaller. The areas of these are 45,000, 30,000, and 22,550 sq. ft. each, respectively. Their forms are rectangular, 300 × 150, 300 × 100, and 205 × 110. At Stoke Newington, with a delivery of 12,000,000 imperial gallons daily, there are five filter beds in use now, and two projected, making seven in all when complete. In Liverpool there are six, for a delivery of 9,000,000 to 12,000,000 imperial gallons. At Dublin, for an assumed delivery of 12,000,000 imperial gallons, there are seven filter beds in process of construction.

Each filter bed, at short intervals varying with the condition of the water, must have the deposit which accumulates on the surface of the sand cleaned off or removed, and while any one is undergoing this cleansing process, the other remaining filters must be competent to deliver the required supply without overstraining their functions. If, then, there are six filters, five of them must be competent to the full duties of the service, and if eight filters, seven of them must be competent to this duty, on the supposition always that not more than one filter will at any time be off duty. Should the circumstances in effect render two unserviceable, the remainder must have area enough to meet the requirements of the case.

We see, then, that the smaller the filter beds—with the condition, however, that not more than one shall be off duty at a time—the smaller will be the total area of filtering surface required for the particular duty. The materials available for construction, and their cost, will also measurably influence the dimensions to be adopted, and it must always be borne in mind that although there may be but one filter off duty, it will frequently happen that another is nearly unserviceable. It is therefore found best to give a liberal area of filtering surface, to be prepared for all the contingencies of the service.

The bottom of the filter bed is prepared to suit the circumstances of its position. It must be made practically water-tight. This is sometimes ensured by laying concrete on the bottom, but quite as often by a layer of hard clay puddle 18 to 24 in. thick, over which a flooring of brick is laid; where the ground is more than usually bad, both the clay and the concrete may be used with advantage; when concrete is used the brick paving is not essential. Upon this flooring a central drain, running lengthwise, is laid, with which are connected on either side small tubular drains of 6 to 9 in. diameter, prepared for this purpose, the sides being pierced with holes to facilitate the entrance of the water. These side drains are laid nearly at right angles to the central drain, and from 8 to 12 ft. apart. The central drain is frequently a double drain, performing two offices—the lower part, which is covered, gathering the filtered water, and the upper part, which is open, delivering the unfiltered water upon the sand, when refilling a filter bed immediately after cleansing, and in use then only for that special purpose. This central drain is sometimes of brick, and sometimes of stone covered with stone flagging, the side walls of the lowest 12 in. of the drain being in either case laid dry; the water-way for this size of filter should not be less than 30 in. wide by 15 in. of height.

A little reflection will show that the lateral drains can hardly be placed too close together, for it is desirable that the filtered water should flow to the collecting drains with as slow a velocity as possible; and the further these drains are apart, the greater must be the amount of water running through each drain.

This drainage skeleton rests on the base of the filter bed, and becomes the means provided to collect the filtered water and deliver it to the outer passages or wells. Upon the flooring of the filter beds, and covering the gathering drains as well as filling up the intervening spaces, a layer of broken stones is laid, large shingle or quarry spauls. The stone should not be larger than will pass through a 4-in. ring, nor less than will pass through a 2-in. ring, and they must be clean and free from earth or quarry rubbish.

The shingle so called is obtained in England from coarse gravel or beach deposits, and is screened to the size wanted.

This layer of broken stone must be 24 in. thick to cover efficiently the pipe drains. Upon this layer of stone properly levelled off, from 18 to 24 in. of gravel is laid. This gravel is usually screened into two or three sizes, the larger of walnut size, the next of the size of a hazel nut, and the third between that and pea size. The largest size lies upon the broken stone, the smallest size at the top, the layers 6 in. thick each. Over this gravel there is laid not less than 30 in. of fine sharp sand, screened to ensure the requisite degree of fineness and uniformity. The lower 12 in. may be a little coarser than the upper stratum of 18 in., but it is important that the two layers should be of uniform fineness and quality throughout, otherwise there will be danger of the water passing through more rapidly at one point than another. The whole depth of these materials amounts to *five feet eight inches.*

From the ends of the pipe drains, as well as from the end of the central drain, small cast-iron pipes of 4 in. diameter, rise to the surface of the ground to enable the air to escape while the water is being first let on upon the filter bed.

In England the sides are usually paved with brick or stone to slopes of from 1 to 1 to 2 to 1. In North Germany the side walls have to be vertical on account of ice, and the depth of the water over the filter beds is not less than 4 ft.

In the worst stages of the English rivers a filter bed has to be cleansed once a week, rarely oftener. The stuff, whether sediment or otherwise, intercepted by the filter, is found collected on the surface of the sand; in the process of its removal, a thin paring of sand is necessarily taken with it, not exceeding from $\frac{1}{2}$ in. to $\frac{3}{4}$ in. in thickness. The impurities carried by the water are not found to have penetrated the sand. The paring of sand is usually cleansed and laid aside for future use, except when fresh sand can be procured at less cost than the washing of the old sand. The thickness of the sand bed is allowed to be reduced by these repeated parings from 8 to 12 in. before it is renewed.

The original thickness of 30 in. of sand becomes then but 18 or 22 in. before it is replaced and brought up to the original lines. The renewal is usually made once in six months, sometimes but once a year, as the convenience of the service may permit.

At each cleansing of the filter bed the sand is loosened by forks for some 6 to 8 in. in depth, and afterwards raked smoothly over.

The sand is liable to pack close if the cleansing is too long delayed. In such case the weight of the water is felt upon the sand; in the usual state of the filter it is not so felt.

The filter bed is usually filled with water from above by flowing it slowly upon the sand either from one point in connection with an overflow drain, or from several points on the side of the filter. It would be safer and more convenient as regards getting rid of the air, to fill it from below by means of the drains there; but if this were done with the uncleaned water it would distribute its impurities all through the filter. The filtered water may, however, by suitable arrangements, be made available for this service. When the filter has been once filled it is not necessary to empty it entirely at each cleansing of its surface.

The lowering of the water 12 to 18 in. below that surface will afterwards be sufficient to admit of the workmen removing the crust of sediment collected upon it.

To ensure the perfect cleansing of the water by the filters as well as to prevent any disarrangement of the materials of which they are composed, the velocity of movement of the water must be very slow. The average rate is ½ gallon a minute for each square yard of sand surface, which is equal to 3½ gallons an hour for each square foot of sand area of the filter bed. James Simpson, who may be said to be the originator of the method of filtering now in such general use in England, is of opinion that the filtering surface should be predicated on a rate of 72 gallons a day for each square foot of sand, which is equal to 3 gallons an hour a square foot.

When the flow of water through the system of filters during the twenty-four hours cannot be made uniform, that is to say, when, as is sometimes the case (in the absence of an intermediate clear water basin), it varies with the consumption, being greater during the day hours than during the night hours, the combined area of the filter beds in that case should be made to meet the maximum or daylight consumption of the service an hour.

The filtered water from each filter bed should be delivered into a small well, whence it escapes into the proper conduit, and is carried either to a common clear water basin, or directly to the pumps. The sluices at this well can be so arranged, by operating downwards instead of upwards, as to adjust the head of water actually in action upon the filter bed. When the filter is clean, 9 in. of head will produce the required flow through the filtering material; according as the sediment becomes deposited on its surface, this head has to be increased to 2 or 2½ ft., varying a little with the character of the sand. If the head be allowed to exceed 3 ft., it is because the surface is being rapidly closed; the weight of the water comes then into play upon the sand, induces the packing already referred to, and leads to the labour of loosening up the material during the process of cleansing. Sometimes when this amount of head is exceeded, the pressure leads the water to break through at points where some slight difference in the material gives it opportunity. It will then flow through in veins, damaging the filter bed; but such overstraining of the filters is rare.

Natural Filters.—Bordering upon all rivers there are found at intervals narrow plains of gravel or sand brought down and deposited there by the river under the varying positions of its channel way. When these beds of gravel extend to a depth below the bottom of the neighbouring stream, they will always be found saturated with water mainly derived from that stream, and however turbid the water of the river, this underground flow will always be found clear, provided that we tap it at a reasonable distance from the channel way.

Covered galleries are carried through these beds of gravel at depths sufficiently below the channel of the neighbouring stream to ensure a supply of water within the gallery during the lowest stages of its water. The water in these gravel beds rises and falls with the height of the water in the river, and unless the galleries were placed below its lowest water they would obviously become dry and would cease to deliver at its lowest stage. These galleries are of various sizes and of various widths, 8 to 30 ft. in width being the latest practice. But the experience of one place will seldom be applicable to another. The character of the neighbouring stream and the fineness or coarseness of the gravel or sand in which the galleries are placed, influence importantly the rate of supply.

Figs. 7314 to 7317 are of the filtering galleries at the Toulouse water-works. The population of Toulouse is stated to amount to 100,000 souls. The water is derived from the Garonne, indirectly, by means of subterranean galleries situated in a bank of gravel on the left bank of the river. The sources of the Garonne are found on the slopes of the Pyrenees chain of mountains, in the department of Ariege. The velocity of the river at Toulouse averages ordinarily 1 mètre a second, or about 2¼ miles an hour. Immediately opposite the filtering ground the velocity does not exceed 2 miles an hour, the dam erected a short distance below having modified importantly the current there. The bank of gravel and sand in which the galleries have been constructed lies within the city limits, but in what may be called the suburbs; the dense portion of the city lies below this point as regards the river, and upon its opposite bank.

It is important to understand the relation of this gravel bank to the lowest stage of the Garonne, and to its flood waters. The surface water of the Garonne at its lowest stage is recorded to have stood 433 ft., 132^{m}·09, above the level of the sea. The surface of the gravel bank referred to is on an average 136 mètres, 446 ft., above the same level, or about 13 ft. above the lowest stage of the river. The river floods rarely cover this bank; in long intervals, however, extreme floods set over it, and the one of 1832 rose to 451½ ft., 137·69, above the sea, covering this gravel meadow, therefore, with some 5½ ft. of water. The rise of the river in ordinary floods may be taken at 8 to 10 ft. In the highest flood on record referred to it rose to 18 ft. above the lowest water of the river opposite to the present pumping engines.

In the pump-house there are two breast-wheels, each 16½ ft. diameter, exclusive of the buckets, and 5 ft. wide each. Each wheel works four plunger-pumps of 10½ in. (0·27) diameter each, and

7314.

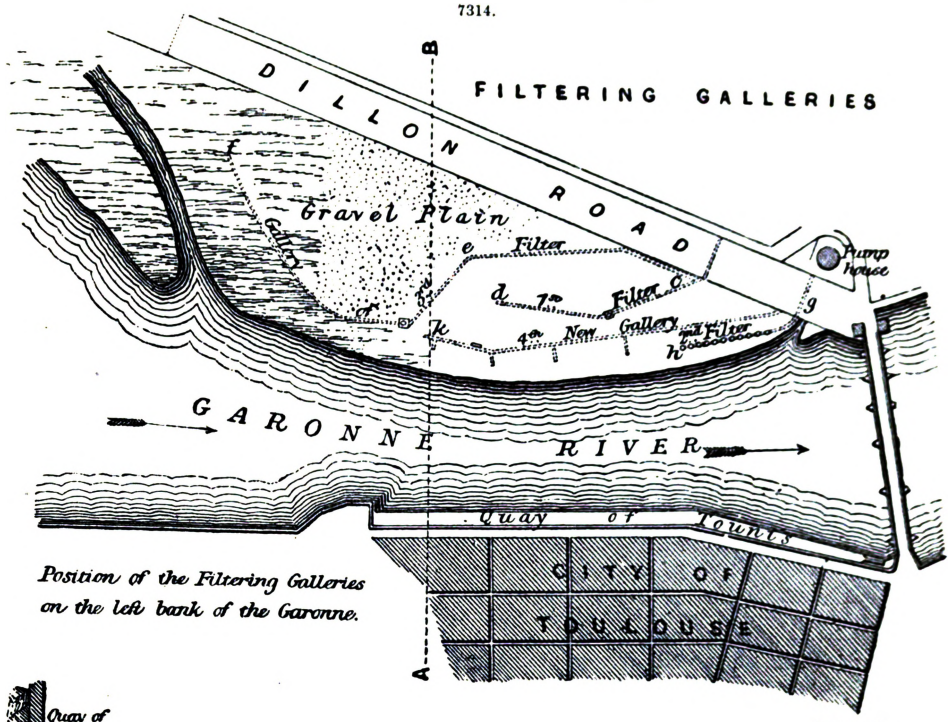

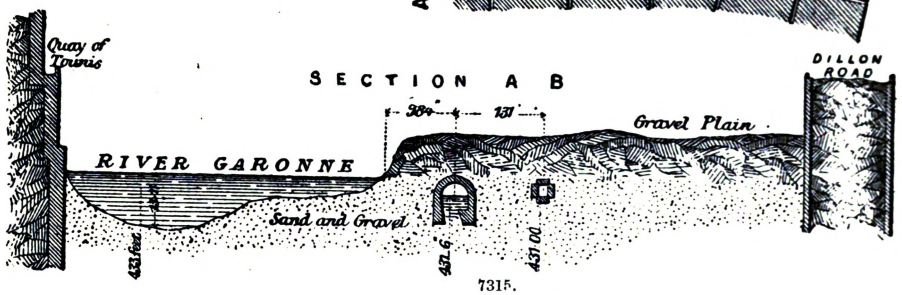

7315.

7316.

Cross Section of New Gallery N° 4

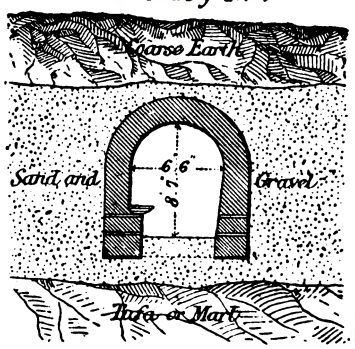

7317.

Cross Section of the Branches of New Branches

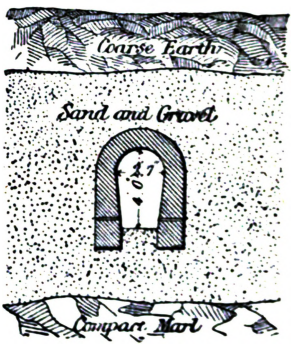

3·80 ft. stroke. The delivery averages 5000 cubic mètres a day. Each set of four pumps delivers its water into a vertical pipe of 10 in. diameter, which is carried up the pump-house tower to a height of 66 ft. above ordinary water of the river. At this height, the waters of the two rising mains are delivered into two city mains of the same diameter, and the head thus acquired enables numerous fountains to be well supplied, and admits of the lower stories or ground floors of many of the houses receiving the water into the house. In this last respect, Toulouse is at present very imperfectly accommodated. There is no reservoir connected with the pumps, which are therefore

necessarily kept perpetually at work, except as one wheel must be occasionally intermitted for repairs.

The new works include a sufficient reservoir to defend the city against accidents to the works, and to admit of their more leisurely repair and examination. They are so arranged as to admit of the water being received into the highest stories of all the buildings.

The form and size of the gravel bed in which the filtering galleries are situated will be best understood by reference to Figs. 7314 to 7317. The deposit consists of gravel and sand of different degrees of fineness, its surface, however, covered with a thick bed of rich soil. The whole rests upon a compact tufa or marl, and the depth at which any filtering galleries can be laid is limited by this impervious base. The surface of the marl is situated here about 12 ft. below the low water of the river.

As much of the body of sand and gravel lies below the level of the water in the river, it is saturated with water, and this water, although evidently derived from the river and its affluents, has passed through such a width or depth of material at a very slow velocity, on the wide plains above, that it has been deprived entirely of the matter which gives the muddy hue to the stream. In the filtering galleries, therefore, it is found colourless and limpid. Immediately under the bed of the stream, or in too close proximity to it, this result would not probably have place. The first filter gallery or drain C D, Fig. 7314, was laid at a distance of about 60 mètres, 197 ft., from the bank. The bottom is situated only about 4 ft. below the lowest water of the river. The form is square, the interior width 1 ft. 8 in., the height 3 ft. The side walls were of brick laid dry, with a flagging stone for the cover, and with no paving on the bottom. The bricks were laid dry and the bottom left uncovered, that the water might have free access to the culvert. The inside of this culvert was filled up with small stones, probably to prevent the side walls, which were not in mortar, from being pressed inwards. The trench in which the culvert was laid was filled up again with the materials taken from it. A coarse gravel was found at the bottom of the trench mixed with flints. The gravel became finer as the depth lessened from the surface, and ended in a fine river-sand, covered at present with from 2 to 3 ft. of soil.

The length of this first filtering culvert is 656 ft.; it is said to have delivered at all times clear water; but the quantity was soon found to be insufficient for the demands of the city. To increase the supply, a second filtering arrangement was projected and built, differing somewhat in character from the first. In this second case eleven wells *g*, *h*, Fig. 7314, were sunk along the margin of the river, covering a distance of 300 ft. They were carried to the same depth as the culvert, and steined up with dry brick. The wells were connected together by iron pipes, and from their lower terminus a connection was made with the pump well of the pump-house. The water from this second filter turned out bad, and it has consequently been for some time in disuse.

A third filtering culvert *c*, *e*, *f*, was constructed on the same plan as the first, but larger. In the lower part of its course it is situated farther from the river than the first culvert, and in the upper part nearer to the river; the length is 1476 ft. (450 mètres). Like the first, it has always produced good and clear water.

The total length of these old filtering galleries (excluding the wells in disuse) is 2132 ft. The growing wants of the city and the increase of its population rendered necessary a further and more liberal supply of water, and a new filtering gallery has been constructed in the same bank of gravel.

It will be convenient to note here the water capacity of the old galleries. This capacity is equal to 5000 cubic mètres a day. The new filtering gallery is of larger dimensions than the others, and it is laid lower in the bed of gravel, and consequently has a greater capacity of drainage from the underground reservoir of the neighbouring plain, of which the particular gravel bank of these works may be said to form a part.

It differs in other respects importantly from the old filtering conduits. Its contour is of mortared masonry, in this case beton, of sufficient strength to defend it from the outer thrust of the material in which it is imbedded, and its interior is not filled with stones, but void, forming thus in itself a considerable reservoir of water. The water finds its way into the conduit from the gravel deposit in which it lies, in part by small earthenware tubes placed on both sides of the gallery, but mainly through the bottom, six-sevenths of which is left unpaved for that purpose, and where the clear water rises, therefore, from the coarse gravel which has place there.

At every seventh mètre a buttress is thrown across of 1 mètre in width, and to this extent the bottom is impermeable. The surfaces of these buttresses, which are intended to defend the side walls against movement from the back thrust, do not rise above the prescribed level of the bottom of the conduit.

The interior height of the new conduit is 8 ft. 8 in. ($2^m \cdot 65$), the width 7 ft. 6 in. ($2^m \cdot 30$). The bottom is placed at $129^m \cdot 45$ ($424 \cdot 6$ ft.) above the sea, or 8 ft. 7 in. below the lowest stage of the river. It is therefore $4\frac{1}{2}$ ft. below the bottom level of the old galleries. The present length of the new gallery is 1180 ft. (360 mètres); but the intention is to extend it gradually to double this length, or more, according as the requirements of the city may demand it.

It will be observed that the new gallery is not based on the marl or tufa upon which the gravel bed rests, but is kept from 2 to 3 ft. above it. This has been done to permit the water to percolate easily into the gallery from the bottom, where it is expected that the mass of the water will enter it, rather than from the side tubes.

The dam in the river below the present pump-house produces comparatively still water opposite to the filter ground, and must encourage that kind of sedimentary deposit there, which the natural current of these rapid mountain streams does not admit of, except in eddies, and then only until the scouring operation of a heavy flood clears the channel of such accumulations. But when the underground material of the plain, for some distance above, consists of an equally open gravel, it can be of little consequence that the river bottom, within the influence of the dam, should become comparatively water-tight. The water will, in any case, reach the filter galleries from above, and

from a somewhat greater distance, and the only effect would be to reduce the rate of delivery somewhat, and perhaps render a greater length of gallery necessary.

Water Regulator.—To ensure a constant discharge of water from a reservoir which has a head of water varying continually, a water regulator is frequently used. Several methods have been adopted, one of the most ingenious is that used at the Gorbals Water-works, near Glasgow. Fig. 7318 represents a transverse section of this arrangement through the regulator-house, showing the method by

7318.

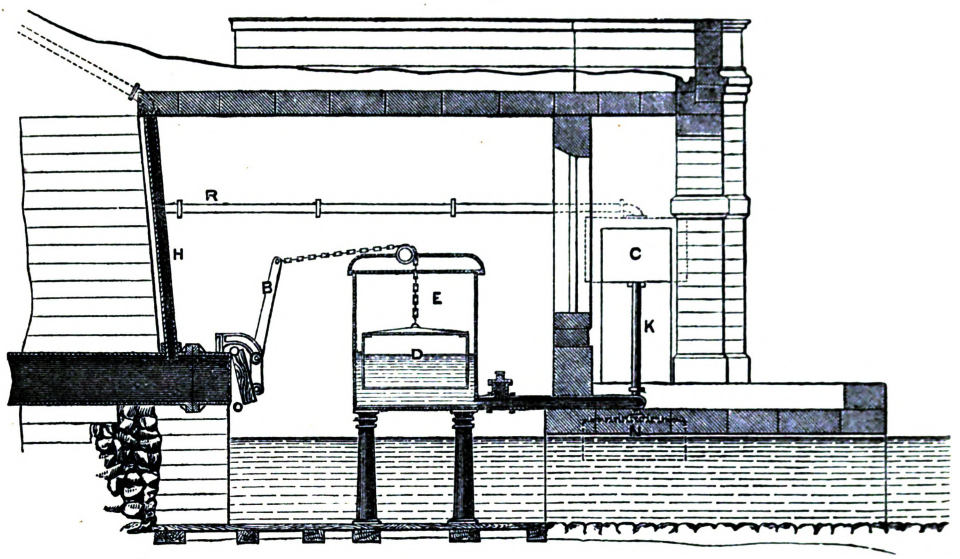

which the discharge is equalized. To the orifice of the outlet-pipe O is fitted a square-hinged flap-valve of wood, against which presses, by a friction roller, a lever B, the arms of which are bent. To the upper arm is attached a chain that passes over a pulley, and is connected with a cast-iron cylinder or float D, that stands in the reservoir E, of slightly larger diameter. At the side of the entrance door of the building is placed another cistern G of cast iron, closed at the top and communicating by a pipe R R with a vertical pipe H, which is in connection with the outlet-pipe, and passes up the slope of the embankment to carry away any air that may accumulate in the main. The cistern G is connected with the reservoir E by a pipe K, which supplies water to float the cylinder D. Now, it is evident that the discharge from the reservoir will be regulated by the position of the lever B, and this again will be controlled by the height of the float D. To regulate this height the supply from the cistern G must be self-adjusting, or be regulated by the amount of water flowing away. The float N has attached to it a spindle, on which are fixed two double-beat valves that work in the vertical part of the pipe K, one of which admits water from the cistern G into the cylinder E, and the other allows the water to escape from the reservoir E. Now, if the surface of the water upon which the float N rests should rise above the proper level, the float forces up the spindle, closing the supply-valve from the cistern, and at the same time opening the lower valve. Thus the supply is cut off and the escape opened, enabling the float D to fall. The subsidence of the float closes more or less the flap-valve, and checks the discharge, in consequence of which the surface of the water falls, and with it the float N, which consequently opens the supply-valve, and again admits water into the cistern E. Thus an almost perfect equality between the consumption and the supply-water is preserved. It would appear that the same effect could be produced by connecting the lever directly with a float on the surface of the water, but such an arrangement would only apply when the pressure against the flap is trifling.

General Remarks.—In arranging a main pipe from pumps, the pipes should have sectional capacity sufficient to allow of the velocity in the main pipe not exceeding 2 ft. a second, as friction increases in proportion to the velocity, as is shown by the law governing the delivery of water from pipes under pressure. Covered reservoirs and tanks should be ventilated, and all supply-pipes arranged in such manner as to allow of easy inspection and subsequent repairs. Stop-taps should be placed betwixt the main and the building in all cases, so as to allow of isolation of any line of service-pipe for repairs. House service-tanks and service-pipes ought to be fixed so that the rooms cannot be flooded in case of leakage or overflow, and ready means of access to all tanks and cisterns must be provided to allow of inspection, cleansing, or repairs. Up-bends should not be formed on lines of main pipes or on service-pipes. If up-bends are inevitable, air-valves have to be provided to let out the air at the up-bends. Bends at right angles on pipes are to be avoided, and the pipe brought round in a curve instead.

In most towns it is necessary during the summer months to distribute water over the streets in order to mitigate the inconvenience arising from clouds of dust, to cool the atmosphere, and to assist in flushing the drains. Hydrants, which can be also used to communicate with fire-hose or stand-posts, are therefore attached at certain intervals to the mains; and in estimating the quantity of water required in any particular town, the quantity required for fires and street-watering must

be taken into account. Figs. 7318A, 7318B, a plan and section of a street-watering apparatus, fitted with a water-meter. The water is admitted from the main through the sluice-cock, passes through the meter, and thence by the iron elbow into the stand-post, from which it is delivered into the water-carts.

7318A.

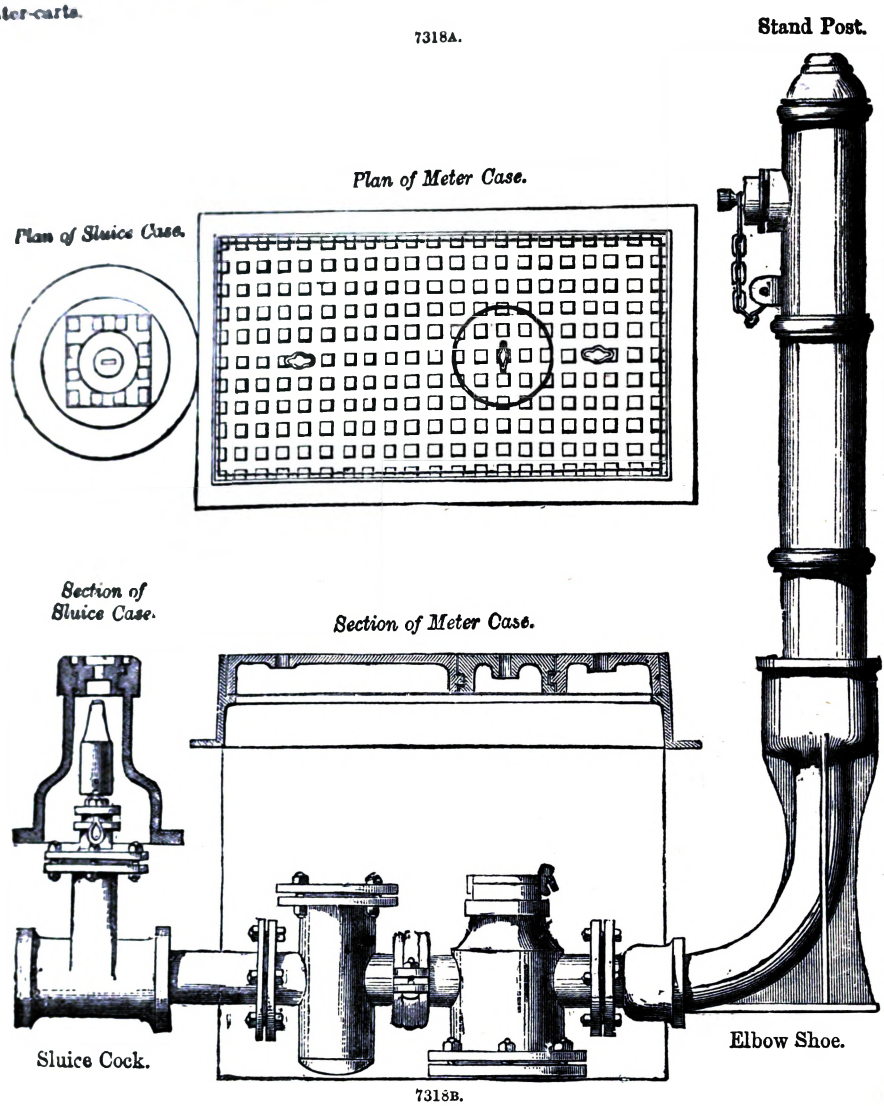

7318B.

Paisley Water-works.—The following account of the water supply of the town of Paisley, for which we are indebted to Alexander Leslie, will serve to illustrate many of the points we have already enlarged upon.

In the year 1835 powers were obtained to bring in water, for the supply of Paisley, from the districts of Gleniffer and Harelaw, Fig. 7319, lying to the south of the town, having respectively drainage areas of 624 acres and 166 acres. The works were executed by R. Thom, who made careful experiments, extending over a period of three years, to ascertain the amount of water flowing from the Gleniffer district, by means of which the quantity actually available was found to be 70,354,769 cub. ft. a year, which is equivalent to 31·06 in. out of a depth of 46·13 in. of rain over an area of 27,189,063 sup. ft., leaving a loss by evaporation and absorption of 15·07 in. The whole of the water from the drainage area was not available for the use of the town, as one-fourth was reserved for compensation to bleach-fields situated on the natural water-courses. This amounted to 22,267,735 cub. ft. a year, leaving 66,803,206 cub. ft. available, being 183,022 cub. ft. a day, or 127·1 cub. ft. a minute.

The works consist of a reservoir at Harelaw, having a capacity of 14,248,000 cub. ft., with a conduit leading from thence to Stanely, where there are two other reservoirs, one to act as a subsiding pond, capable of holding 28,340,000 cub. ft., the other for clear water, with a capacity of 7,194,000 cub. ft., with regulating sluices for turning the water into either. The open conduit between Harelaw and Stanely is the principal feeder for the Stanely reservoirs; in its course it intercepts the burns flowing from Gleniffer braes, which are almost all pasture ground.

There are self-acting compensation sluices at the outlet of the lower of these reservoirs to ensure a uniform delivery with a varying head of water in the reservoir. From thence the water is con-

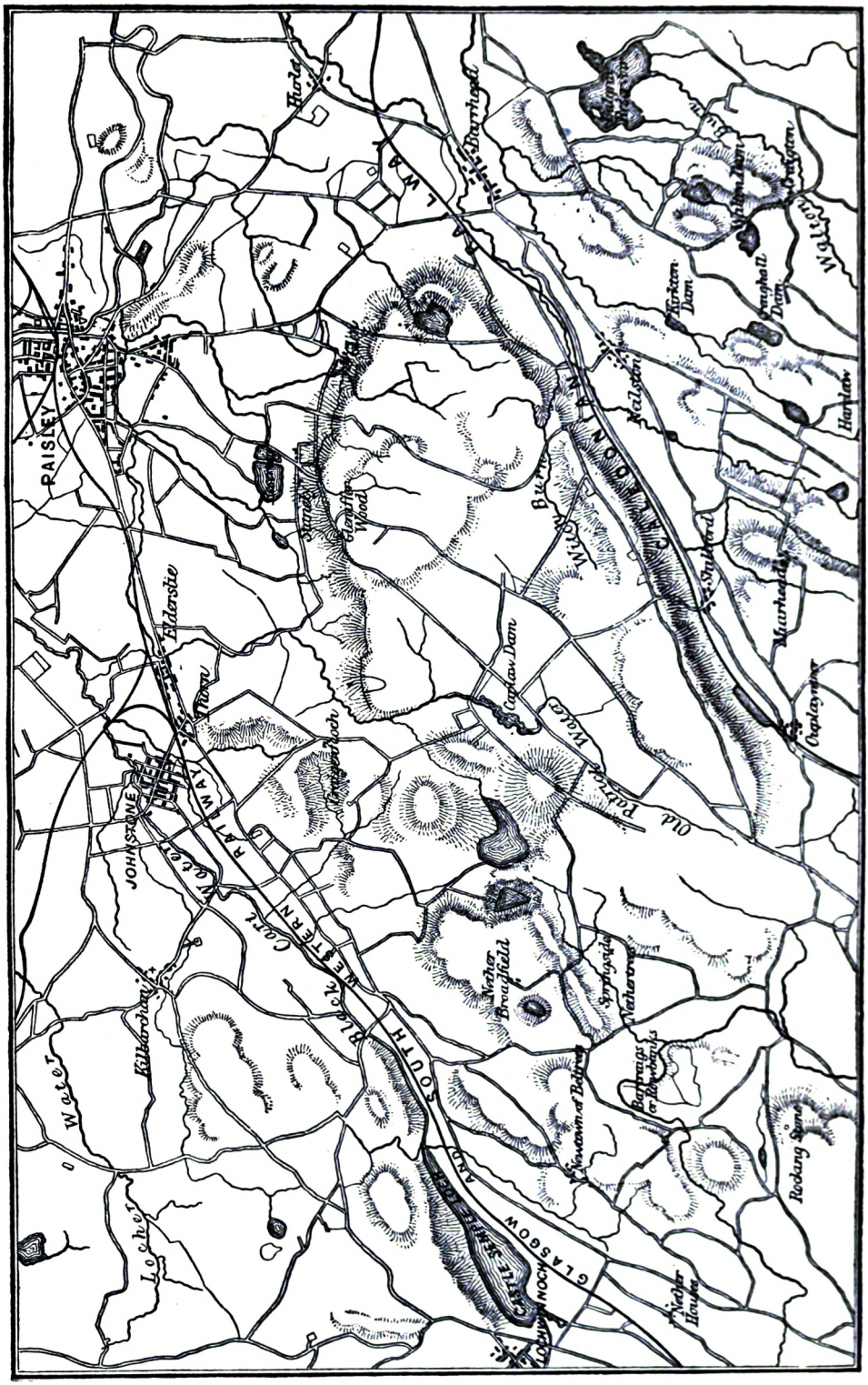

7319.

veyed by a masonry conduit, 2 ft. by 1 ft. 6 in., to filters and a covered tank, on an elevation at the southern end of the town. The population in 1853 was about 50,000, so that the supply of water for each person, including manufactories, was 22½ gallons a day.

The growing wants of the town rendered it necessary for the authorities to look out for increased supplies, and, after examining various sources, the water of the Rowbank burn, which rises on the borders of Renfrewshire and Ayrshire, and which is one of the tributaries of Castle Semple Loch, was selected. The average height of the land selected for the reservoir is 500 ft. above the Ordnance datum, rising in undulating ridges to 700 ft. at the watershed. The works have also to supply the town of Johnstone and the village of Elderslie, having together a population of nearly 10,000 persons.

The drainage area utilized by the engineer to the new works, James Leslie, contains 1220 acres, and is partly arable, partly pasture, and $\frac{1}{13}$ of the whole, amounting to 94 acres, is moorland, the water from which is rather mossy at times, but this is diverted from the store reservoir, making it however available for compensation. Two rain-gauges were placed in the neighbourhood, of which a careful register was kept. One of these, representing the rainfall over 700 acres, was at Springside; 540 ft. above the sea, and the other, the fall over 520 acres, at Muirhead, at a height of 490 ft. above the sea. It was thus ascertained that the yearly fall at Springside equalled 64·39 in., and at Muirhead 50·79 in.

The quantity of rain falling on 700 acres, the depth being 64·39 in., is equal to 163,614,990 cub. ft., and on 350 acres, the depth of rain being 50·79 in., 64,528,695 cub. ft. The average depth of rain over the whole area is 59·86 in., or 228,143,685 cub. ft., and subtracting the amount measured by the weirs, subsequently mentioned, 179,662,325 cub. ft., there remain for loss by evaporation and other causes 48,481,360 cub. ft., which is equal to 12·72 in. of the rainfall, leaving 51·67 in. available for the high ground and 38·07 in. for the low ground. There now remain 170 acres, with a rainfall of 38·07 in. to be added, which yield 23,492,997 cub. ft. of water a year, raising the total to 203,155,322 cub. ft. a year. A stone reservoir was constructed at Nethertrees, on the Rowbank or Birkcraig burn, about three miles south-east of Lochwinnoch; the water area is 100 acres, and the greatest depth 35 ft. The pipes were constructed to carry 184 cub. ft. of water a minute, and the compensation water was fixed at 92 cub. ft. a minute. Storage was provided for 180 days, or six months of this whole quantity, being about 77,000,000 cub. ft.

To test the flow of water into the Rowbank reservoir four gauge-weirs were erected on the tributaries, and the water flowing over them was measured every day. These gauges were constructed of battens and stakes carefully levelled and made water-tight, with a free overfall, and with sufficient still water behind to prevent inaccuracy from initial velocity. No. 1 was 5 ft. long; No. 2, 2 ft. 4 in.; No. 3, 1 ft. 4 in.; and No. 4, 1 ft. The depths being taken, were calculated by the formula $Q = 4 \cdot 904\, b\, d\, \frac{3}{21}$, where Q = cubic feet a minute, b = breadth in feet, d = depth in inches. The total flow a year over all the weirs was;—For No. 1, 129,484,049 cub. ft.; No. 2, 38,359,063; No. 3, 7,262,279; No. 4, 4,556,934; total, 179,662,325.

A conduit, $6\frac{1}{4}$ miles long, conducts the water to the Stanely filters, whence it is conveyed to Paisley by a 16-in. pipe. A branch pipe leaves the main 3 miles west of Paisley to supply the towns of Johnstone and Elderslie; and a set of filters and a tank were constructed at Craigenfeoch for filtering the water supplied to those places. Another set of filters and a tank are placed on the high ground to the south of the original reservoirs at Stanely, with a branch pipe leading down to them, to make up any deficiency that may occur in the old works.

To impound the water it was found necessary to construct three embankments, the largest of which is situated across the bed of the burn or stream at Nethertrees. The first operation consisted in the formation of a by-wash channel, to divert the water of the Reivoch burn from the reservoir during the construction of the bank, as it was from this burn that floods were apprehended; and it now serves for carrying the water of that burn past the reservoir, should it be at all impure owing to floods. When this was finished the outlet-tunnel, Figs. 7320 to 7322, was proceeded with. The purpose of this was, in the first place, to discharge the waters which would have accumulated during the construction of the bank, and to receive the two outlet-pipes, one of which carries the compensation water, and the other the water for the town. The tunnel is 426 ft. long, a length of 150 ft. of which, at the lower end, was open at first, and afterwards covered in, the remaining 276 ft. being tunnelled through rock. The interior dimensions of the tunnel are 5 ft. 6 in. by 5 ft. 6 in. It has vertical side walls, and a semicircular roof. The whole length of the arch was built of moulded brick. Where in open cutting the side walls were 15 in. thick, and the arch was built of the same

7320. 7321. 7322.

thickness, set in mortar, with a rubble-stone arch outside, 9 in. deep; and where in tunnel the side walls, for a length of 236 ft., were built of brick, and the space between the wall and the rock was filled in with close-packed rubble stone set in mortar. A length of 40 ft. at the inner end, where the rock was friable whin, a kind of trap or green-stone, was built wholly of brick set in cement, the brickwork filling up the entire space to the rock. This portion had a brick invert varying from 9 in. to 15 in. in thickness set in cement, the remainder of the floor of the tunnel being natural rock, dressed off as smoothly as possible. The rock varied in quality from what is locally called Osmond, being like the hardest whinstone, to a soft grey, granulated, sedimentary substance, easily cut with a knife. It required blasting, and in some places the roof had to be supported until the building was finished. At the lower end of the tunnel is the sluice-house, Figs. 7323 to 7326, 10 ft. square, with an arched roof 10 in. thick, and side walls 3 ft. thick, in which are placed three sluices for

directing the water into the town, or for diverting it into the burn. At the inner end of the tunnel is a horseshoe-shaped recess of masonry, Figs. 7327 to 7330, in which is placed the iron up-stand or

7323.

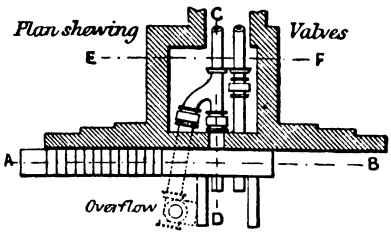

7324.

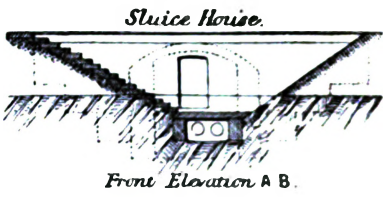

7325.

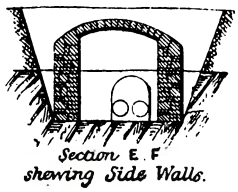

7326.

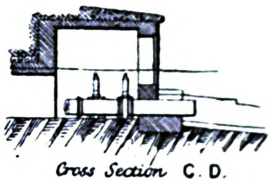

7327.

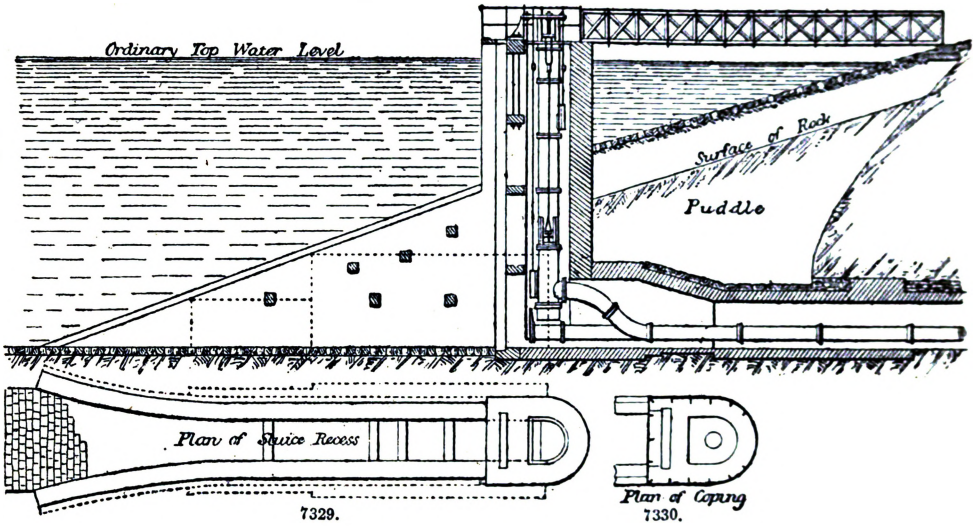

7329.

7330.

7328.

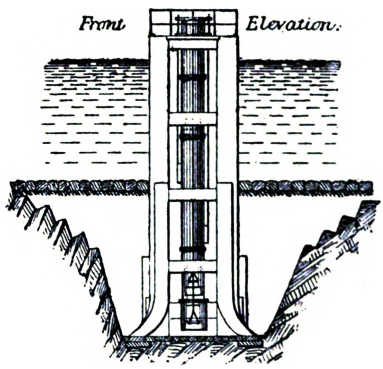

7331.

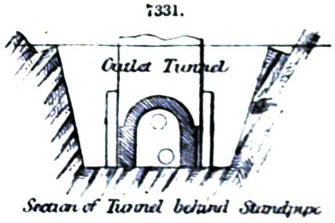

sluice-shaft. This recess is 10 ft. 9 in. long by 5 ft. 9 in. broad, with walls 2 ft. 6 in. thick. Across the front are lintels 2 ft. 6 in. by 1 ft. 3 in. in section, and, again, in front of these is a groove for holding a wooden grating, which may be replaced by stop planks when access to the sluices is

required. Across the bottom, and 2 ft. 6 in. above the floor, is a stone 3 ft. by 1 ft. 9 in. in section, on which stands the iron sluice-shaft, and below which passes the pipe conveying the compensation water. For a length of 17 ft. at the upper end, the tunnel is of larger dimensions, being 7 ft. 6 in. by 5 ft. 6 in., and tapering to 5 ft. 6 in. by 5 ft. 6 in., Fig. 7331. This portion was filled up with masonry round the pipes, after the embankment was completed, to make it water-tight; and round the up-stand, up to the level of the ground, it was filled in with clay puddle and covered with pitching. Leading to this up-stand is a channel 5 ft. 9 in. wide, Figs. 7327, 7328, with side walls varying from 2 ft. 6 in. to 3 ft. 6 in. thick, with cross lintels 1 ft. square to keep the walls apart, and the bottom is pitched with 9-in. pitching set on a bed of concrete 6 in. thick. The ashlar was procured from Shillford quarries, 4 miles south-east from the reservoir. Provision was made in the contract for filling up the tunnel with clay round the outside of the pipes, but this has not been required, as the solid masonry at the upper end is water-tight.

The greatest depth of the principal bank is 60 ft., Fig. 7332, and the length 500 ft. along the

7332.

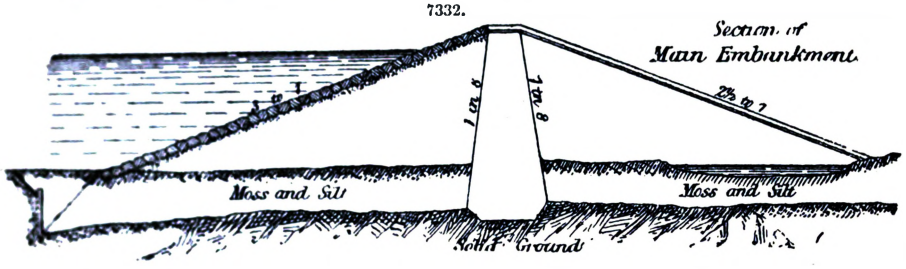

top, which is 5 ft. above high-water level, and 10 ft. broad. The slopes are 3 to 1 inside and 2½ to 1 outside. The puddle is 8 ft. broad at the top, and increases with a batter of 1 in 8 on each side down to the level of the ground, from which point it diminishes to one-half that width at the bottom of the trench. The puddle-trench is 62 ft. deep at the deepest part. To form a proper foundation, all soft material was stripped off the site of the bank, including a considerable accumulation of peat and silt at the bottom of the valley, which was excavated down to the clay or rock before the bank was commenced. The greatest depth under the surface of the valley was 17 ft. on the outer, and 22 ft. on the inner side. During the excavation it was found that the moss on the inner side was so soft that it would not stand even with a moderately flat slope; and it was also threatening to cause a leak in the temporary bank across the valley. To obviate this, and to enable the moss and silt to be readily cleared out, a row of piles was driven at the inner toe of the embankment. The broken nature of the rock forming part of the puddle-trench rendered it necessary to excavate the hills on both sides to a considerable depth.

The material for the bank was found on the site of the reservoir, and consisted of clay, which, when mixed with the rock taken from the excavation of the puddle-trench, formed a good and substantial bank. To facilitate the work a short tramway was laid from the north end of the bank to the place where the materials were procured. The wagons were worked by a small locomotive engine, and the stuff, having been tipped on a loading bank, was removed in common tip carts. The banks were then formed with a slope inwards towards the trench of 1 in 12. Care was taken to spread all stones and keep them separate, so that earthy matter might fill up the interstices. The layers, each 6 in. thick, were pressed and trodden down by carts and horses passing frequently over them, and were pounded with beaters where the carts could not work. No planks or rails were allowed in forming the banks, and in dry weather water was poured over the whole surface to make it settle.

The wagons for conveying the puddle were also worked by the locomotive engine. A staging, carrying rails, having been formed along the side of the trench, the wagons ran along it by their own gravity, and the clay puddle was tipped into the trench; it was then spread in thin layers, mixed with water, and properly cut and worked up by being tramped on by navvies. After undergoing this process, it formed a compact mass quite impervious to water. When the slopes of the bank had been made, and had settled, the inside slope was covered with a layer of broken stones, over which was laid pitching of hard blue whinstone. On the outer slope, and on the top of the bank, was laid a layer of stones 3 in. deep to keep out moles and rats, over which a layer of soil was dressed off, and sown with rye-grass and clover seeds. The natural slopes between two of the banks were pitched with rough pitching, set on a layer of broken stones.

The other banks were formed in the manner already described, but they were of smaller dimensions, one being 230 ft. long and 14 ft. deep, and the other 815 ft. long and 18 ft. in depth.

The waste weir at the south end of the large bank was 40 ft. long, being at the rate of 1 ft. in length for every 30 acres of drainage area. The side walls are 3 ft. high on each side of the weir, and the channel, which has a gradient of about 1 in 6, has been cut out of the solid rock, with a width at the bottom of 10 ft.

It was originally intended to strip the entire surface of the inside of the reservoir, as the presence of vegetable matter was considered objectionable; but the cost led the operation to be dispensed with. The quality of the impounded water, however, has been decidedly deteriorated by the omission of this operation. When the bank and waste weir were finished, two parallel lines of 21-in. pipes were laid through the tunnel; at the inner end one was connected to the bottom of the cast-iron up-stand shaft, and the other passed under the stone carrying the sluice-shaft, and was bolted to the sluice for giving out compensation water. The space under the stone was then built up. These pipes, which were in 12-ft. lengths, were lowered by a crane on a bogie at the sluice-house end of the tunnel; a tramway having been laid through it, the pipe was then run up to

the place required, and when on the bogie, it was used as a ram to drive the preceding pipe tight home.

The sluice up-stand, in the horseshoe recess, Fig. 7327, is made of cast iron. It is 2 ft. 6 in. in interior diameter, of ¾-in. metal, cast in five pieces, with flanges bolted together. It is about 35 ft. high, and there are four sluices at different levels. The sluice openings are 17 in. square, and are fitted with double brass faces. The pipe for the town supply is connected with this cylinder, and at a lower level is the pipe for the compensation water, with the rod for working the sluice on the end of it, passing up in front of the iron cylinder. The sluices are worked by a movable brass nut working on a 2½-in. screw. The compensation water is discharged into the burn or stream, across which is placed a gauge-weir to measure the amount of water. The water for the town is discharged into a cast-iron well, with an overflow to take the pressure off the clay pipe which leads from it towards Paisley.

The total length of pipe track from Rowbank reservoir to Stanely is 11,126 yds. For a distance of 3872 yds. this track has a gradient of 1 in 700, and is laid with 3021 yds. of 21-in. clay pipes, 76 yds. of iron pipes in moss, with a few iron pipes at the burn crossings, and there are 765 yds. of masonry aqueduct where the track is in deep cutting. The second portion of the track is supplied with cast-iron pipes, of which 3286 yds. are 18 in. in diameter, and 367 yds. 16 in. The third portion has 16-in. clay pipes for 2700 yds., laid at a gradient varying from 1 in 140 to 1 in 70, and 200 yds. of iron pipes. The portion from Stanely to Paisley, 2895 yds. in length, has 16-in. iron pipes. The pipe for supplying Johnstone and Elderslie leaves the 18-in. main near Craigenfeoch, and is 8 in. in diameter to the filters, from thence it is 10 in. to Thorne, from which place there is a branch to Johnstone 8 in. in diameter, and another to Elderslie 5 in. in diameter. The track for the pipes was excavated 1 ft. wider at the bottom than the exterior diameter of the pipe, with slopes varying according to the quality of the material; opposite each faucet a clear space of 6 in. was left all round, to permit of the proper jointing of the pipes. When the cutting was in rock, the pipes were laid on a bed of earth 3 in. deep. Where the clay-pipe track was through a porous material, the pipes were surrounded with clay puddle 12 in. thick. The clay pipes were jointed in the following manner;—Two strands of rope-yarn, steeped in thin cement, were wrapped round the spigot and calked in after being inserted into the faucet; then the remainder of the faucet was carefully and closely filled up with cement, which was bevelled out from the end of the faucet along the outside of the pipe, with a slope of 1 to 1, and when practicable, as in the case of the 21-in. and 16-in. pipes, a boy was sent in to point the inside of the joint with cement.

Wherever there is a constant fall and no pressure on the pipes, says Leslie, clay pipes should be found to answer the purpose well, provided sufficient care is taken in selecting those perfect in form and without cracks or flaws, especially at the neck where the faucet is fastened on to the body of the pipe, and where a crack is likely to be found. Care must be taken, too, that they are properly jointed, and that the thin cement is not shaken out of its place during the operation of refilling the track, a probable result if it is done before the cement has had time to set. Above all, they should not be laid in too deep cutting, as the superimposed material is certain to break and crush them; nor should they be subjected to any pressure from a head of water.

The great fault found in the pipes was a liability to crack at the junction of the faucet with the body of the pipe. A method was devised in order to test their soundness, when that could not be ascertained by ordinary inspection. The pipes were placed on a wooden platform, with the faucets downwards, and inserted in a thin bed of clay carefully worked so as to be water-tight. The pipes were then filled with water obtained from a pit close by. With a head of 3 ft. of water some of them were found to leak, though the greater number were perfectly tight. The cracks in those which leaked were carefully pointed with Portland cement inside and outside. When the cement had set, they were again subjected to the water test, and for the most part they were now found to be water-tight; those that still leaked were rejected.

Where clay pipes were used in cuttings above 9 ft. deep, a relieving arch of rough rubble was formed over them to protect them from crushing. Where the depth of cutting exceeded 12 ft., a masonry aqueduct was substituted for the clay pipe, the sectional area of which was 3 ft. by 2 ft., Figs. 7333 to 7335. The soles were of pavement about 3 in. thick, which was set flush in mortar

7333.

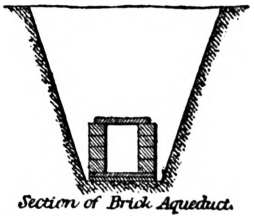

Section of Brick Aqueduct.

7334. 7335.

Manhole on Aqueduct.

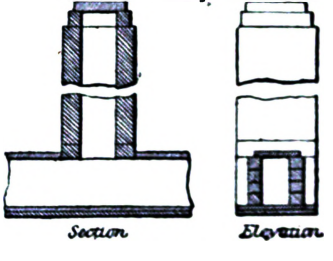

Section Elevation

on a bed of levellings and well pointed. The sides consisted of parapet ashlar, procured from Shillford quarries, 9 in. broad, with the faces scabbled and the backs left quarry-faced; and the covers were of pavement from 3 in. to 5 in. thick, with a rest of 6 in. on each wall. Where part of the conduit was in treacherous ground, the soles and covers were checked, so as to keep the walls apart should there be any tendency to force them together. Great care was taken in filling the space behind the ashlar with clay and soft material, and a depth of 1 ft. 6 in. to 2 ft. of earth was placed on the top of the covers to protect them in filling in the cut, which in most cases was in rock. Where the track

passes under streams an iron pipe is substituted for the clay pipe. This is built round with rubble, over which is placed hammer-dressed pitching 10 in. or 12 in. deep, and in the centre, over the pipe, pavement is laid of a thickness and extent depending on the size of the stream. One stream is crossed by a bridge of 16 ft. span, Figs. 7336 to 7338. The arch stones are 15 in. deep, and the side walls are tied together with bond stones with a hold of 12 in. at each end.

7336.

BRIDGE OVER STREAM CARRYING MAIN PIPE.

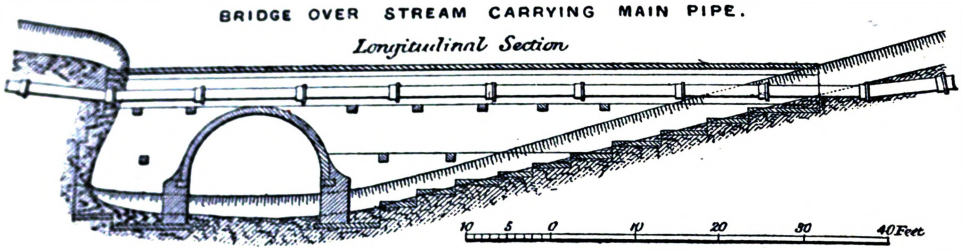

The clay pipes were of the following dimensions, all being 3 ft. long, exclusive of the faucet;—

Internal diameter.	Thickness.	Depth of faucet.
12 in.	1 in.	4 in.
15 ,,	1 ,,	4 ,,
16 ,,	1¼ ,,	4¼ ,,
21 ,,	1½ ,,	4½ ,,

7337.

Section through Arch.

7338.

Section through Wing Walls

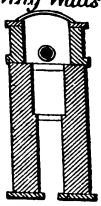

The faucets are of 1½ in. greater diameter than the outside of the pipes, and are ½ in. thicker than their body; the shoulder is ¼ in. thicker than the body of the pipes, and both spigot and faucet are grooved to make them hold the cement.

The iron pipes were 12 ft. long exclusive of the faucet. The principal dimensions and weights of these pipes were as follow;—

Interior Diameter.	Length of Pipe exclusive of Faucet.	Length of Pipe, inclusive of Faucet.	Thickness of Body of Pipe.	Weight of each Length.
inches.	feet.	feet. inches.	inch.	cwts. qrs. lbs.
5	12	12 4	½	3 0 15
8	12	12 4¼	9/16	5 1 26
8	12	12 4½	5/8	6 0 15
10	12	12 4½	5/8	7 2 6
10	12	12 4½	11/16	8 1 13
16	12	12 4¾	¾	14 1 5
17	12	12 4¾	¾	15 0 16
18	12	12 4¾	¾	16 0 0
18	12	12 4¾	13/16	17 1 15
21	12	12 5	13/16	20 0 22
22	12	12 5	1	26 0 18

The pipe-joints were, for the most part, turned and bored, and the pipes were laid in the following manner;—The spigots were wiped clean, and were coated with fresh Portland cement of the consistency of paint made up immediately before being used. They were then inserted into the faucets and the pipe driven home by repeated blows, in the case of the smaller pipes from the wooden mallet, and in that of the larger pipes with the next one slung as a ram, in which case a piece of wood was interposed to keep the iron from striking iron. The lead and yarn joints were made after the spigot was inserted, by calking the faucet hard with sound rope-yarn up to within 2½ in. of the outside, and filling the remaining space with melted lead, which was hard staved so as to be water-tight.

The pipes were tested with the pressure of a column of water, which for a pipe

in.		in.		ft.	in.		ft.	
5	in diameter and	½	thick, was	600 high.	17	in diameter and ¾ thick, was	300	high.
8	,,	9/16	,,	300 ,,	18	,, ¾ ,,	300	,,
8	,,	5/8	,,	600 ,,	18	,, 13/16 ,,	400	,,
10	,,	5/8	,,	300 ,,	21	,, 13/16 ,,	300	,,
10	,,	11/16	,,	600 ,,	22	,, 1 ,,	400	,,
16	,,	¾	,,	300 ,,				

While under pressure they were repeatedly struck with a hand hammer, and any pipes sweating or leaking were rejected. The uniformity of their thickness was also tested by calipers designed for the purpose.

Two filters, Figs. 7339 to 7341, for the supply of Johnstone and Elderslie, were constructed at Craigenfeoch, each 45 ft. by 32 ft., and the tank was 50 ft. by 26 ft. and 13 ft. deep.

7339.

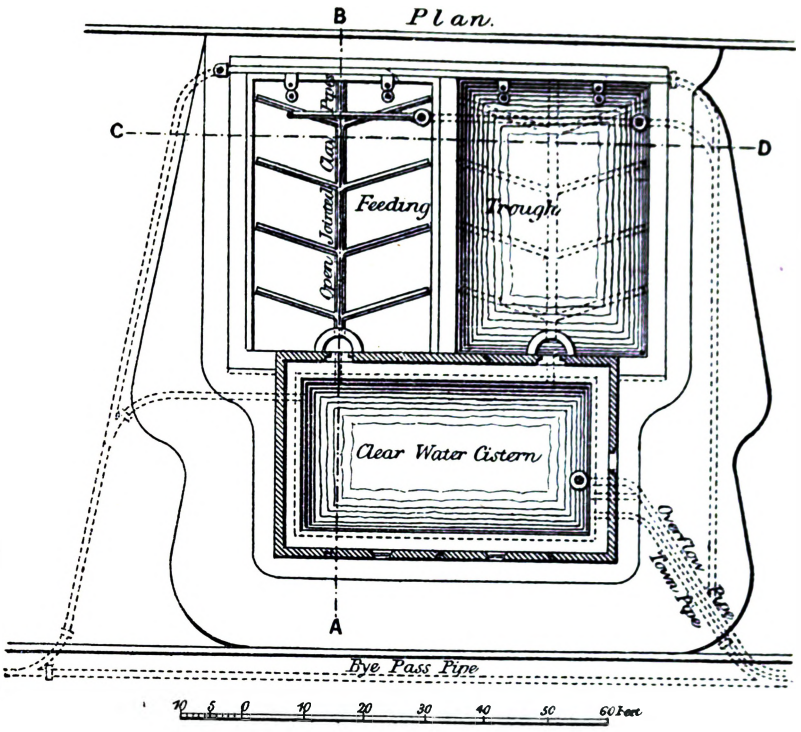

7340.

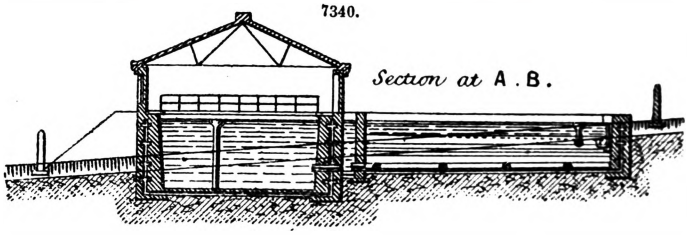

7341.

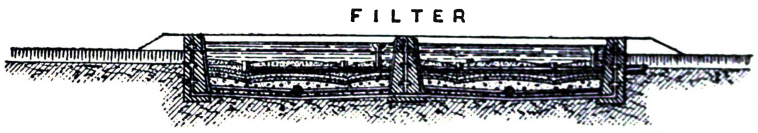

Fig. 7342 is a section of the feed-pipe; Fig. 7343 a section of the feed-trough; Fig. 7344, section of the inlet-pipe and trough; Fig. 7345, overflow-pipe for filter; Fig. 7346, regulating sluice; and Fig. 7347, by-pass sluice for filter; Figs. 7348 to 7351, outlet-sluice for town-pipe, with screen.

The walls of the filters and tank have a foundation course 8 in. thick, and are built of good flat rubble bedded in mortar, and the face stones of the tank and of the filters above the level of the sand are of chisel-draughted ashlar. The tank walls are 3 ft. 6 in. thick, at the level of the platform, and the filter walls are 3 ft. thick; both have a batter on the inside of 1 in 12.

As the excavation consisted for the most part of porous rock, the whole area of the building was well grouted with mortar run into every crevice, and the floor of both filters and tank, including halfway through the walls over the foundation course, was covered with a layer of clean gravel, 4 in. thick, grouted flush with Portland cement. The retaining walls were brought up with a void of 4 in. in the heart, with two dovetailed recesses to form a tie opposite each other 12 in. by 6 in. by 6 in. for every square yard of surface. These voids were filled with clean gravel in layers of 6 in. connected with the concrete of the floor, and each layer was grouted with Portland cement. The result was an excellent water-tight wall, the only objection being the cost, which was high. The floor of the tank was covered with pavement 3 in. thick, laid flush in mortar and pointed with cement, and an area of 6 sq. yds. under the inlet-pipe was laid with ashlar 9 in. deep, calked on

the joints with iron-rust cement. There are two semicircular wells at the outlet of the filters, with sluices for regulating the head of water over the filters during filtration. The filters have each a

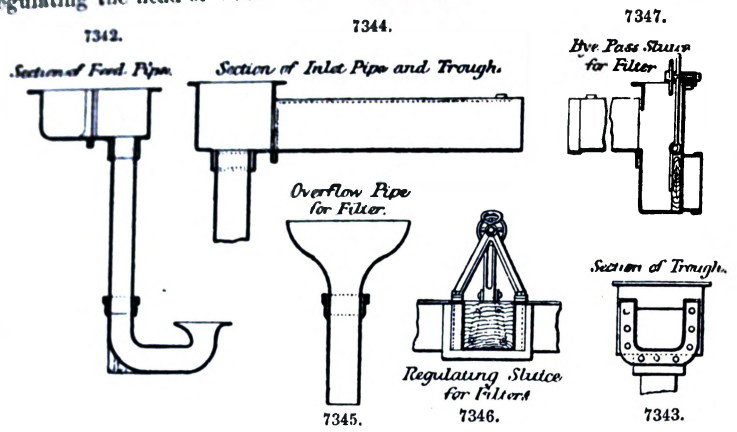

12-in. clay pipe along the centre, with branches and 4-in. cross-pipes laid with open joints to admit the water, and with an iron air-pipe at the end of each. The filtering material consists of a bed 2 ft. deep of coarse gravel, small enough to go through a 2-in. ring, but not through a ¾-in. ring; the upper surface is in ridges and furrows 6 in. deep, and over that is a layer 6 in. deep of clean gravel which will go through a ¾-in. screen, but not through a ⅜-in. screen; over this is a layer of slate chippings 6 in. deep, then a layer of coarse sand 6 in. deep, and lastly a bed 18 in. thick of fine clean sharp sand, dressed into the prescribed form of ridges and furrows, Fig. 7341. The water is admitted into the filters by feeding troughs along the side farthest from the tank, from which it passes through sluices and feeding chests into the feed-pipe, and is delivered from a trumpet mouth at the level of the sand, which prevents any disturbance of the filtering material.

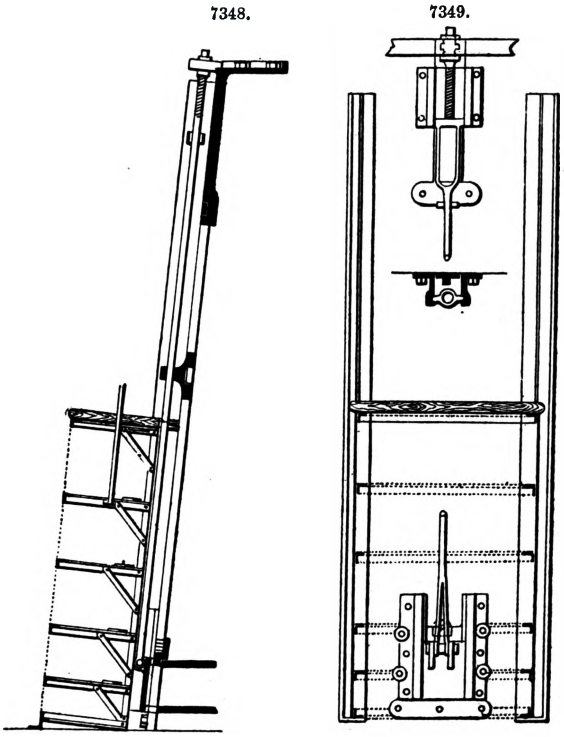

The roof of the tank is of wrought iron with T bar rafters and struts, and round tie and suspension rods, 6 ft. apart, braced diagonally, resting on and bolted to a cast-iron wall-plate, and having L lathes 8½ in. apart for the slates. The slates, which are Welsh seconds, 20 in. by 10 in., are fastened on by copper wire to the lathes, overlapping 3 in. The mortar employed was Arden lime well burned and ground, mixed in the proportion of two and a half parts of lime to two of sand and one of mine dust. The high-level filters and tank erected at Stanely are of the following dimensions; three filter beds each 90 ft. by 60 ft., and a tank 138 ft. by 38 ft. and 14 ft. deep. They are constructed on the same principle as those above described, the only difference being that the walls of the tank are 4 ft. 6 in. thick at the top; all the walls inside batter 1 in 10, but for economy the concrete groove was dispensed with, and on the outside of the walls clay puddle was substituted for it.

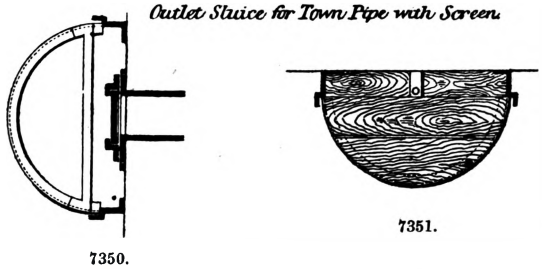

Works relating to Water Supply;—'Report by the General Board of Health on the Supply of Water to the Metropolis,' 8vo, 1850. Kirkwood (J. P.), 'Reports on the Use of Lead Pipe for Service Pipe in the Distribution of Water for Cities,' 8vo, New York, 1859. 'Distribution de l'Eau potable dans les Fontaines et dans les Maisons particulières de Berlin,' imperial folio, Berlin, 1860. Dumont (A.), 'Les Eaux de Lyon et de Paris,' 2 vols. 4to, sewed, Paris, 1862. Morin (A.), 'Des Machines et appareils destinées à l'élévation des Eaux,' 8vo, Paris, 1863. Gale (J. M.), 'On the Glasgow

Water-works,' 8vo, Glasgow, 1864. Dupuit (J.), 'Traité théorique et pratique de la conduite et de la distribution des Eaux,' 2 vols. 4to, Paris, 1865. 'The Brooklyn Water-works and Sewers, a descriptive Memoir,' 4to, New York, 1867. Colburn and Mawe, 'The Water-works of London, 8vo, 1868. Kirkwood (J. P.), 'Report on the Filtration of River-water in Europe,' 4to, New York, 1869. Chapman and Wanklyn, 'Water Analysis, a Practical Treatise on the Examination of Potable Water,' crown 8vo, 1870. Hughes (S.), 'On Water-works for the Supply of Cities and Towns,' 12mo, 1872. See also numerous papers in the 'Minutes of the Institute of Civil Engineers.'

WEB. Fr., *Core;* Ger., *Gewebe;* Ital., *Costola;* Span., *Nervio.*

A web is a thin vertical plate of metal connecting an upper and lower part or table of a girder.

WEDGE. Fr., *Coin;* Ger., *Keil;* Ital., *Zeppa, Cuneo;* Span., *Cuña.*

A wedge is a piece of metal or other hard material, thick at one end and sloping at the other to a thin edge, used in splitting wood, rocks, and the like; in raising heavy bodies, and for similar purposes. See Mechanical Powers.

WEIGHING MACHINE. Fr., *Balance;* Ger., *Tafelwage;* Ital., *Macchina da pesare;* Span., *Máquina para pesar.*

See Balance.

WHEEL AND AXLE. Fr., *Roue et Essieu;* Ger., *Rad und Achse;* Ital., *Asse nella ruota;* Span., *Rueda y eje.*

See Mechanical Powers.

WOOD-WORKING MACHINERY. Fr., *Machines à tailler le bois;* Ger., *Holzverarbeitungs-Maschinerie;* Ital., *Macchine da lavorare il legno;* Span., *Maquinaria para labrar madera.*

Next in rank to machine tools directed to metal working, machines for wood working are most important among those employed in industrial manufactures. As a material, wood enters largely into the construction and often forms the greater part of permanent structures, such as buildings and bridges, and in carriage manufacture, for both roads and railways; while for furniture wood is almost exclusively used. In ship-building, even in what are called iron ships, a large share of the material employed is wood. The elasticity of wood, and its rigidity compared with its weight, adapts it to many uses, for which no other material seems to be fitted; even the permanent way of railways rests on wood, whenever it can be obtained at a cost that will permit its use for the purpose. The number of persons engaged in wood manufacture, including joinery, ship-building, car and carriage making, and furniture manufacture, is greater in civilized countries than the number of those connected with the conversion of iron or textile substances, and with these two branches of industry excepted, wood manufacture is by far the most important branch of technical industry we have.

Wood, unlike metal, is not malleable, or ductile; it cannot be moulded or compressed into shape, but all forms made of wood are cut from blanks whose external dimensions will cover the finished object; bending, which is practised to some extent in the manufacture of light carriage-wheels and similar work, forms an exception to this rule, but is an inconsiderable part of the processes employed in wood converting.

The wood working begins with felling trees in the forest, an operation that is performed mainly by hand, all attempts thus far to construct felling machines for the purpose having proved unsuccessful, a result attributable to the necessary portability of such machines, the incessant adjustment required, and the danger of destruction from falling trees.

The first operation in wood working, after the logs are prepared, is forest sawing or slitting the logs into rectangular sections, called deals, scantling, plank or boards; deals, when sawed merely to reduce the timber to such dimensions as to allow it to be handled and transported; scantling, when the pieces are of a square section, or nearly so; planks, when sawed to final dimensions that exceed 1 in., and are less than 4 in. in thickness; and boards, when the thickness is 1 in. or less.

The machinery for lumber manufacture is called by the general name of mills in North America, a name that has no doubt been adopted from sawing machinery being in most cases operated in combination with machinery for grinding grain, each supplying the local wants of a neighbourhood, the sawing and grinding machinery being driven by the same motive power, and frequently both are erected in the same building.

Lumber sawing machinery can be divided into three classes, consisting of reciprocating saws, rotary saws, and band saws. The extent to which the different classes are used being in the order in which they are named; reciprocating saws being most common in America, and almost exclusively used in Europe for lumber cutting. Fig. 7352 is a perspective elevation of a reciprocating lumber saw by Arbey, of Paris, arranged to receive a greater or less number of blades, as the nature of the work may require. *a* is a strong rectangular frame, in which the saws are strained and adjusted. This frame has a reciprocating movement of 20 to 30 in., imparted by the crank-wheel and connection seen in front. The log is mounted on the two carriages *b*, *b*, which are fed along by the spur-wheel and pawl gearing at the side, the feed movement being intermittent and consonant with the reciprocating motion of the sash or saw-frame *a*.

In some machines of this class rollers are used for feeding, so that the logs pass through continuously one after the other; such mills are called gang mills, and may be arranged with any number of saw-blades; the driving shaft can be placed on top of the main frame *c*, or a steam cylinder may be connected directly to the saw-frame *a*; the general principles of operation, however, remain the same.

Muley mills, a variety of reciprocating lumber saw-mills, are used in North America for many kinds of work where accuracy of the lumber is an object, and sometimes by preference for regular lumber manufacture. These mills operate with an unstrained reciprocating saw supported by a light cross-head at each end, and by lateral guides at the sides of the blade, that come close to the top and bottom of the log, so that the saw is kept rigidly in place both in entering and leaving the wood. The saw-blades used in these muley mills are from 10 to 12 in. in width, and of unusual

thickness, in order to secure the required rigidity, and to sustain the strain of the up-stroke which falls on the saw-blade. The speed of these mills is from 300 to 400 strokes a minute, and their performance, aside from the kerf waste, is all that can be desired with a single blade.

7352.

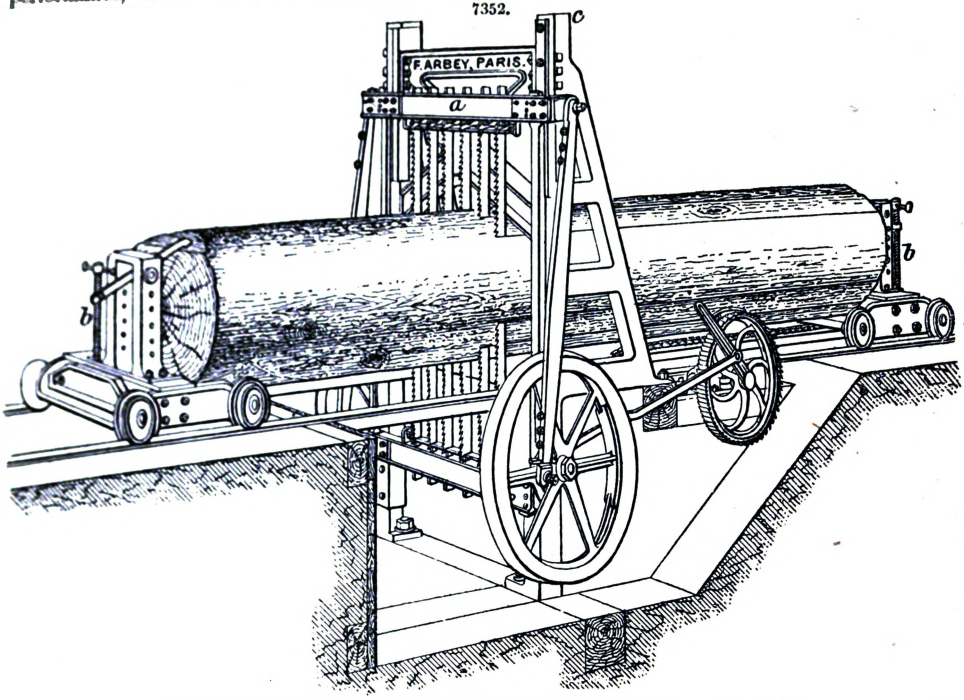

7353.

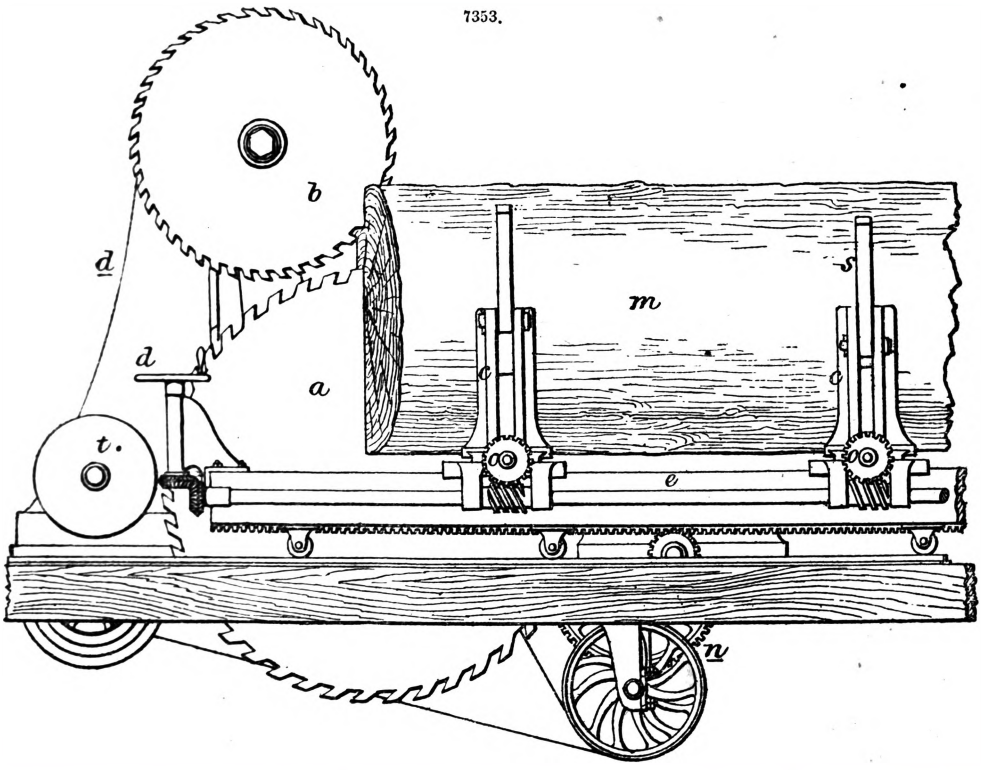

The feeding devices, log carriage, and other details, are similar to those in other saw-mills, the feeding movement being generally continuous, and not intermittent as with gang mills.

Fig. 7353 is a timber sawing machine arranged with rotary saws, by Allen Ransome and Co.,

of London. Machines of this kind are extensively used in America, where the value of timber is not so great as in Europe, and the loss of the kerf by reason of the thicker saws required is not such an object. The saws not being supported by tension, and their rigidity being dependent upon the thickness of the saw-plate, when of large diameter should be made ¼ in. or more in thickness, which with a wide set, wastes from $\frac{5}{16}$ in. to $\frac{3}{8}$ in. at each cut. In Fig. 7353, *a* is the main saw, and *b* a top saw which is used when the depth of the timber exceeds the capacity of the saw *a*. The top saw *b* is supported on the cast-iron standard *d*, and is driven by a belt connecting the spindles of the two saws at the back of the standard *d*. E is a long reciprocating carriage carrying the log *m*; this carriage is operated by the gearing seen at *n*, which receives motion from the spindle of the saw *a*. The log *m* is adjusted laterally to the saws by the two standards *c*, *c*, operated by screws and the tangent-wheels *o*, *o*; *s*, *s*, are dogs or hooks that are driven into the log to prevent it from rolling; *t* is a flanged disc, technically called a spreader, that stands in line with the saws, and acts as a wedge to keep the pieces separated, and prevent them from clamping the saws.

7354.

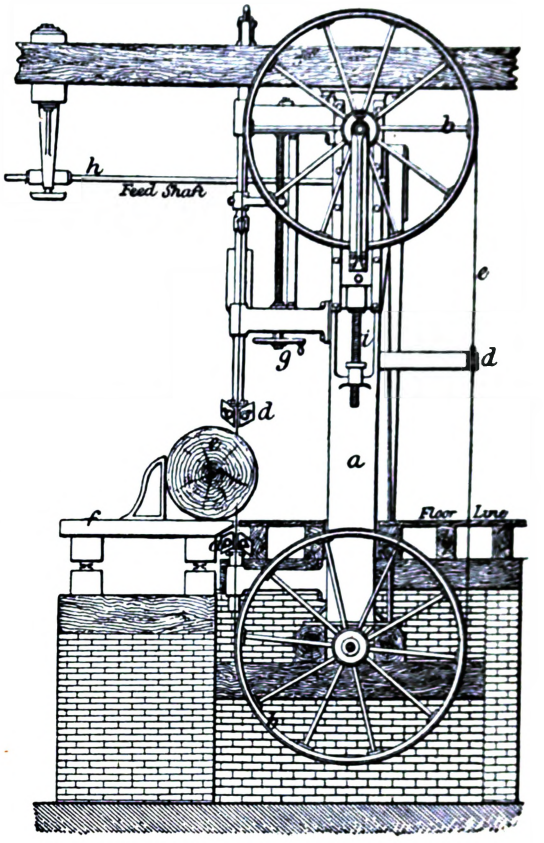

Fig. 7354 is a front elevation of a band sawing machine for sawing timber, by Richards, London, and Kelly, Philadelphia. *a* is a strong cast-iron column with which the wheels *b*, *b*, are connected; *e* is the saw; *d'*, *d*, *d*, are guides to steady and support the saw; *e*, the log being sawed; and *f*, a reciprocating carriage, similar in its action to the one last explained; the upper guide *d* is adjusted up or down by means of the hand-wheel *g* to suit the depth of the logs being sawed; *h* is a shaft transverse to the axis of the saw-wheels used for driving the feeding gearing, hauling in logs, or other purposes, as may be required. The top wheel has a vertical adjustment on the column *a* by means of the screw *i*, and rests on springs that equalize the tension of the saw-blade, and provide for the expansion and contraction of the saw caused by changes of temperature during the intervals of cutting. The machine as here arranged will receive saw-blades 50 ft. long to 6 in. wide.

Band saws waste but little kerf in lumber cutting, are capable of tension like reciprocating saws, and can be driven at a higher rate of speed than rotary saws. The experience in their use has, however, not been sufficient to meet the difficulties that arise in their operation, and the skill required to manage them is so great that their general employment, as in the case of large rotary saws, must be a work of time.

7355.

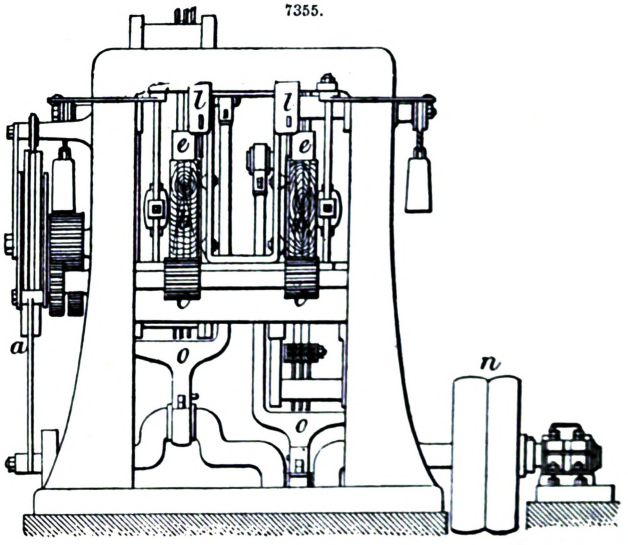

After timber cutting, the next process, for such lumber as requires to be reduced to less or more exact dimensions, is second sawing, or resawing, which is performed on machines that correspond in most respects to those used for timber cutting, except that the machines are not so heavy, and are driven at a higher rate of speed. Resawing is performed with reciprocating, rotary, and band saws, but more especially with reciprocating saws, where by the use of a large number of blades the aggregated cutting movement of the saws taken together may equal or even exceed that of rotary saws or band saws.

Figs. 7355, 7356, represent front and side elevations of a machine arranged for resawing or

second sawing, having two saw-frames and independent feeding devices, so that two deals or planks may be cut at the same time. The two frames are used with the further object of balancing each

7356.

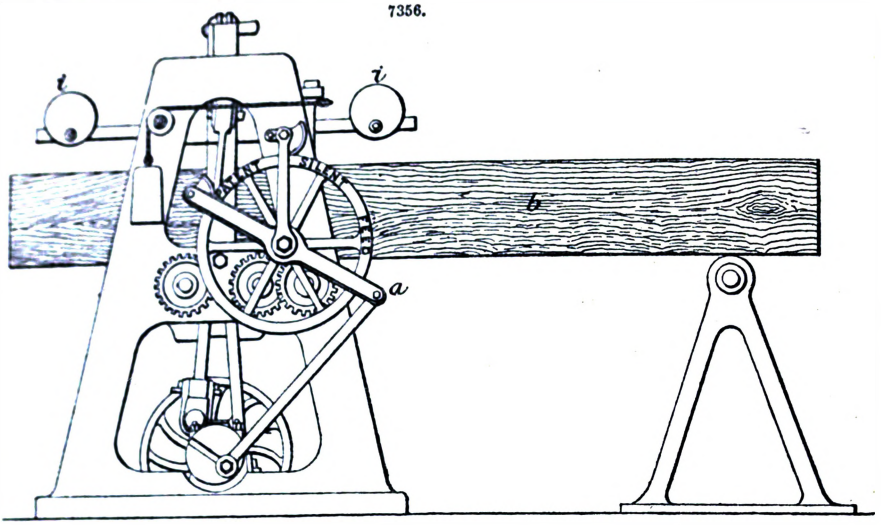

other, by having the cranks set opposite, and thus avoiding the jar and vibration that is inseparable from reciprocating machines. This is partially accomplished as the weight of the reciprocating parts approach one plane, and although the object sought in such a compounded machine is not fully attained, yet a great deal of the vibration is avoided. The feed in this machine is intermittent, and operated by the devices shown at *a*, *a*, which will be understood from Figs. 7355, 7356; *b* is a deal which is forced through the machine by the fluted rollers *c*, *c*; on the top of the deal there are pressure rollers *e*, *e*, held down by the levers and weights *i*, *i*; the crank-shaft is mounted in bearings connected with the main frame, and driven by the pulleys at *n*; *o*, *o*, are forked connections that pass up at each side of the saw-frames, and are attached to studs at the sides.

Figs. 7357, 7358, are of a band sawing machine arranged for resawing. The main standard *a* is

7357.

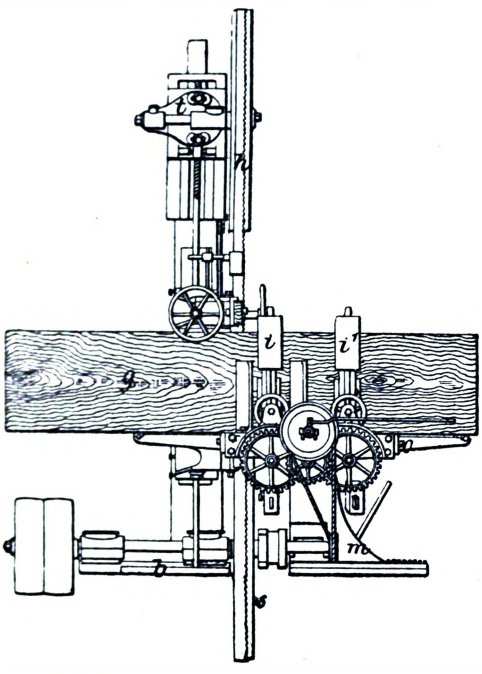

7358.

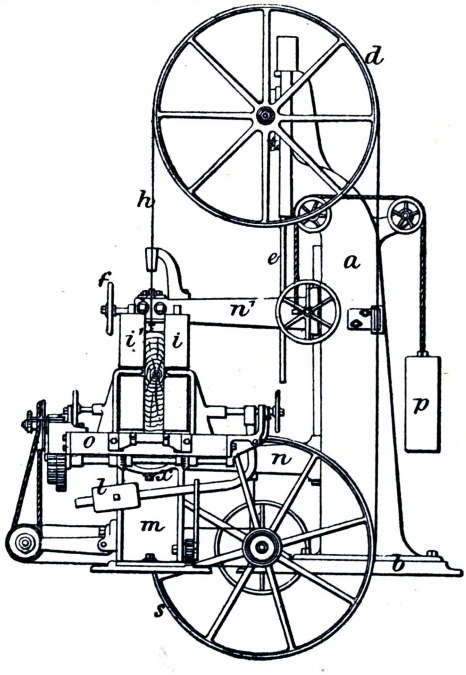

of cast iron, standing on and bolted to a strong sole-plate *b*; the shaft of the lower wheel *s* runs in brackets bolted to this sole-plate, which is made large enough to constitute a base for the machine. The top wheel *d* is mounted on a movable saddle *t*, that slides up and down upon the face of the standard *a*, and is moved by means of a screw *e*, and hand-wheel *f*, connected by bevel-gearing inside the arm or bracket *n*; *g* is a deal or plank fed to the saw *h* by means of the rolls *i*, *i*, which are driven by gearing beneath the platen *o*, and are pressed together by the lever and weight at *e*.

The feeding mechanism is all mounted on and supported by the stand *m*, which can be moved to or from the saw as required. These feeding devices and the table *o* on which they are mounted can be set at various angles by means of the concave seat seen at *x*. The saw-guides are carried on the two iron brackets *n'*, *n*, the top one having a vertical adjustment on the face of the column *a*, to accommodate lumber of various depths; *p* is a weight to counterbalance the top guide bracket *n*, so that it will stand at any point without fastening. The tension of the saw, as in the larger machine for timber cutting, falls on flexible springs. The saws used on this machine are 30 ft. long and 3 in. wide; they are given a cutting movement of 5000 ft. a minute.

Circular saws are not much used for resawing, except when the pieces to be cut are thin enough to bend and allow a wedge-shaped saw to be employed, as in sawing veneers or scaleboards. A saw of parallel thickness, sufficiently rigid to perform resawing in dry lumber, would occasion a great waste by reason of the kerf; besides, circular saws are more difficult to operate in resawing than either reciprocating or band saws.

For cutting lumber into small pieces and to dimensions, as it is called, bench saws are used, consisting of a bench or frame with a flat top, and a rotary saw mounted as in Figs. 7359, 7360. *a* is the main frame which is, with the top, cast in one piece; *b* the gauge to guide the lumber and determine the thickness of the piece cut off; this gauge *b* is fastened to a stiff bar planed to fit into a dovetailed groove extending across the top of the main frame, the gauge being held by steel dowel-pins seen at *c*. The gauge *b* is arranged to be set at any angle up to 30° for cutting bent pieces; *d*, *d*, are details of the gauge *b*; *e* is the countershaft to increase motion from the line shafting, and to stop or start the machine by a shifting belt.

7359.

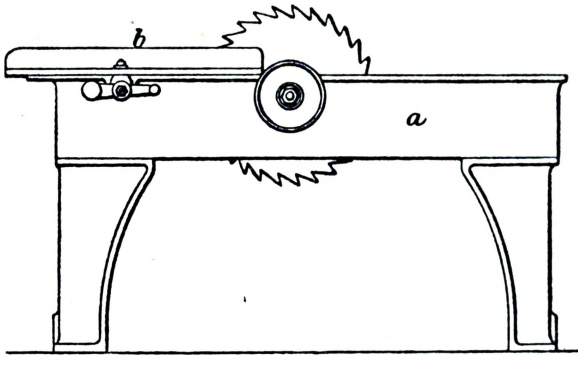

7360.

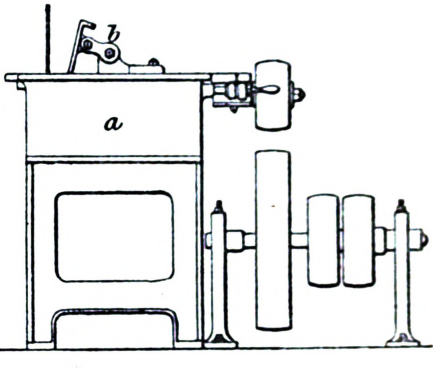

7361.

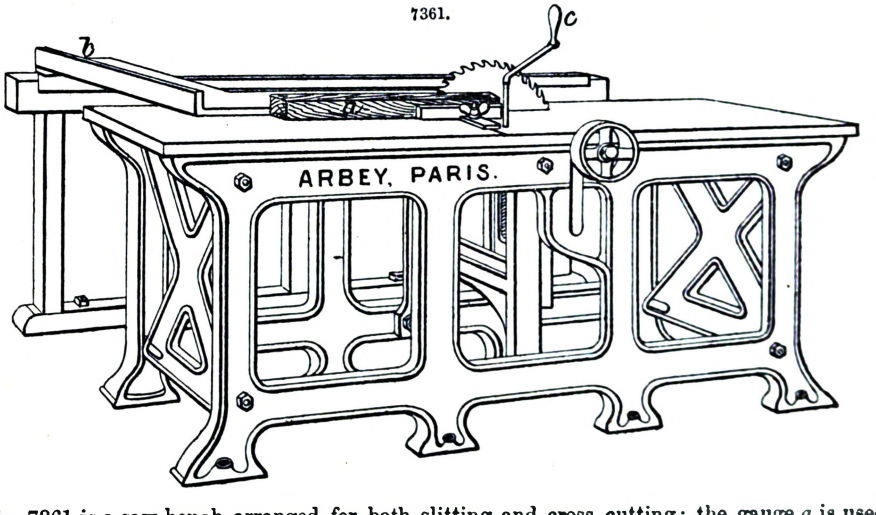

Fig. 7361 is a saw-bench arranged for both slitting and cross cutting: the gauge *a* is used in slitting, and can be removed while the traversing table is used for cross cutting. The saw with the mandrel and pulley is raised or lowered by means of a sliding frame *d*, operated by the winch *c*, so that the saw may be projected through the top of the bench to any height required, and within its capacity. This arrangement is used for cutting grooves or rebates, and in any case where the saw is to cut to a specific depth.

Machines for cross cutting lumber transverse to the fibre are generally distinct from machines used for slitting, and may be divided into two classes; one in which the saws are moved to the material, adapted to the heavier kinds of work, and the other when the wood is moved on carriages and the saws stationary.

Fig. 7362 shows a cross-cutting saw of the first class, with a movable saw *a*, which is mounted on a saddle that slides on the projecting standard *b*. This standard is arranged to adjust up or down upon the sole-plate *c*, as the diameter of the saw or the tension of the driving belt *d* may

require, the adjustment being made by the screw *e*. The carriage or saddle on which the saw-spindle is mounted is moved on the bracket *b* by means of the hand-wheel *f*, which is connected with a chain inside the standard or main frame *b*; *g* is a table for supporting the timber *h* that is to be cut. The top of this table is composed of a number of iron rollers to avoid friction and facilitate the adjustment of the timber. When the saw *a* is moved out or in, upon the bracket *b* the belt *d* traverses on the long drum *i*, the tension remaining the same at all points.

7362.

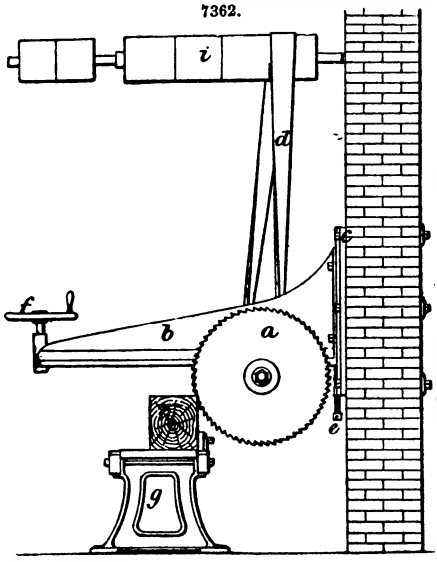

Fig. 7363 is another machine with a traversing saw arranged for cross cutting, the driving gearing being placed beneath the floor. *a* is the main frame of cast iron; *b* the saw, which is mounted on a carriage that moves on rollers inside the main frame; *c* is the wood to be cross cut, and *d* rollers on which it moves; *e* is the driving pulley hung in the radial swing frame *f*, pivoted at *g*. This frame *f* rises and falls as the saw is moved backward and forward on the frame *a*, and permits a regular tension of the vertical belt *i*; *h* is the driving belt by which power is communicated to the machine.

Various modifications of cross-cutting machines with traversing saws have been made, the diversity in their arrangement relating mainly to the means employed for communicating power to the saw-spindle. In all machines of this class that are driven by horizontal belts, or belts that run in the plane of the traversing motion of the saw, the driving strain of the belt has to be resisted either in bringing the saw forward, or in running it back, an objection that is quite serious in the case of hand-feeding, which best suits the operation of these machines. With vertical belts or belts that run transversely to the line of the saw movement, this difficulty of belt resistance is avoided, and a steady action of the saw ensured.

7363.

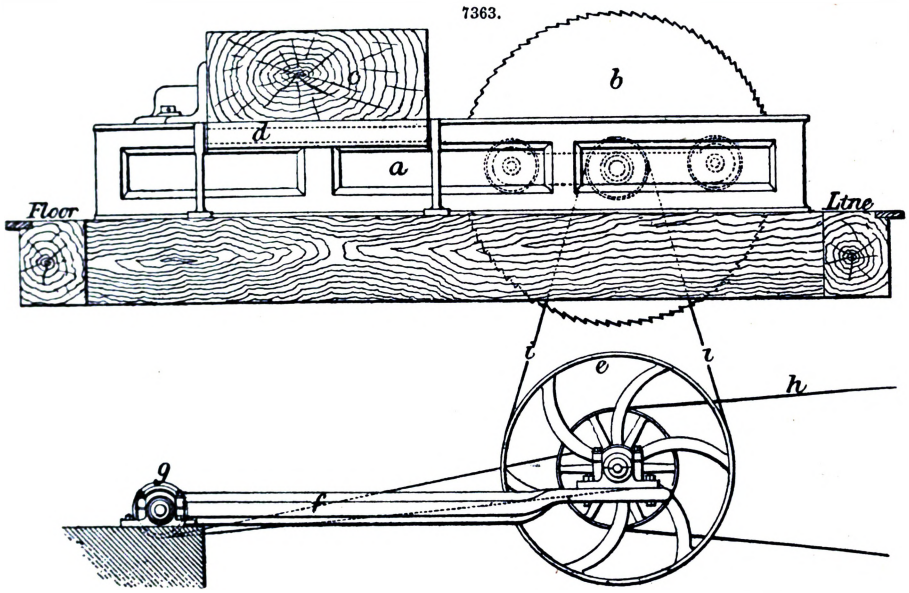

Fig. 7364 is what is called a carriage cut-off saw, the wood to be cut being traversed on the carriage *a*, which is mounted on rollers running on the top of the brackets *b*, *b*. The standard *c*, on which the saw-spindle is supported, and the brackets *b*, *b*, are bolted to a heavy sole-plate *d*, that keeps the parts of the machine in true adjustment; *e* is a small flat table to support the pieces cut from the lumber, the main part resting on the running table *a*.

It is obvious that small pieces of lumber, such as the parts of cabinet work, can be more readily moved and handled than a saw and mandrel, and that a machine arranged upon the plan of the one in Fig. 7362 is more convenient for ordinary uses than those arranged with a movement of the saw for feeding, as in the two machines just described.

When wood is to be cut in curved or irregular lines, saws of a narrow width must be used, the kerf allowing the course to be changed at pleasure, within certain limits; in this way curves can be cut whose radius does not exceed twice the width of the blade for saws to $\frac{1}{4}$ in. wide; for larger curves the width of the saws cannot exceed $\frac{1}{6}$ of the radius, unless the saws are made convex. This

class of sawing is usually termed sweep or scroll sawing for the heavier class of work, and fret sawing for the lighter or ornamental kinds.

7364.

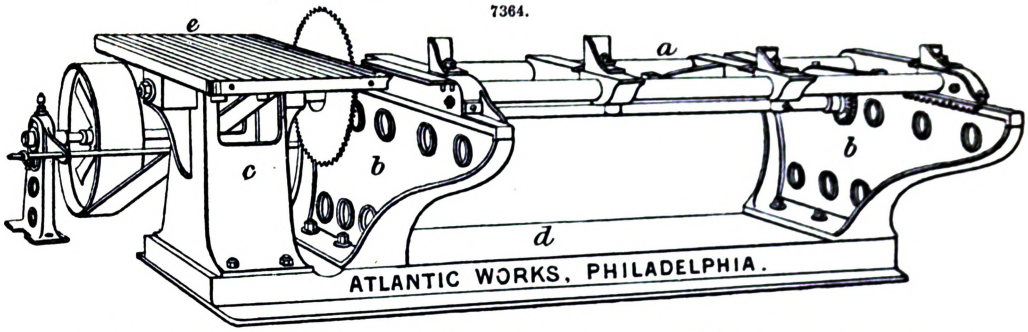

Scroll and fret sawing are performed with reciprocating saws and band saws; by reciprocating saws for perforated cutting, when the saws have to be passed through holes for what is called inside cutting, and by band saws for outside cutting, on the exterior of the pieces only.

Reciprocating saws for irregular lines consist of three modifications. Sash saws, when the saw is strained in a reciprocating frame used for heavy work; saws that are not strained and are supported like circular saws by the rigidity of the blades only; and saws strained by elastic or spring tension. In the second and third instances the machines are divided into two independent parts, connected only by the saw-blades, the object being to obtain a clear sweep for turning the lumber that is being cut. Saws strained in frames and used for sweep or scroll cutting are so analogous to reciprocating saws, already described, except as to size and strength, that no further description is required.

7365.

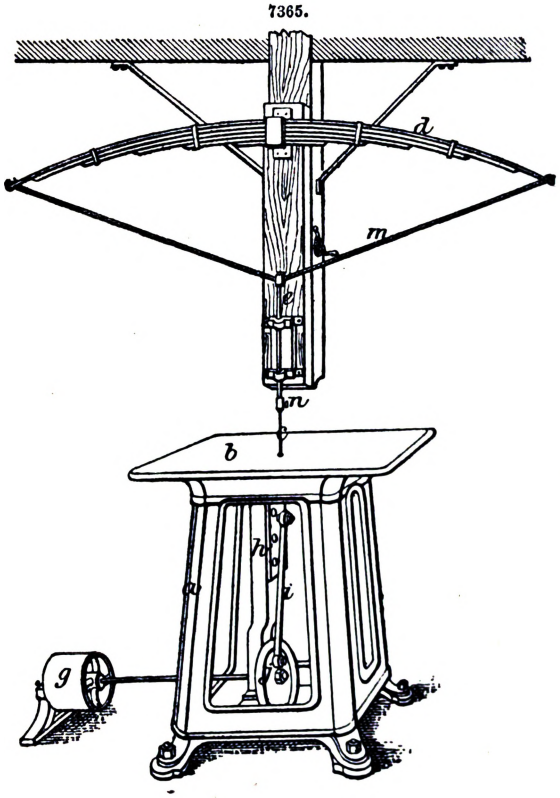

7366.

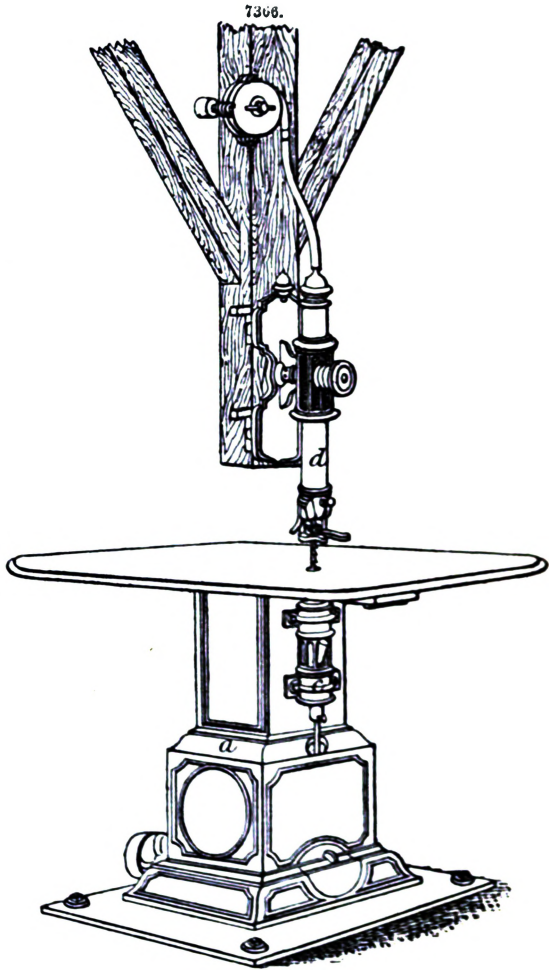

Fig. 7365 is a fret saw, of the spring-strained kind, made by F. Arbey, of Paris. *a* is the main frame, and *b* the platen or top, both of iron; *f* is the crank-wheel, and *g* the driving pulley; *i* is the

connection between the crank-wheel *f* and a sliding bar moving in guides beneath the table at *h*. The saw *e* is fastened to this slide beneath the table, and to a similar one *e* above the table.

This top sliding bar *e* is connected to the spring *d* by means of the flexible cord *m*. The light weight of the reciprocating parts permits a rapid motion of the saw, which can be for the same reason suddenly stopped, adapting the machine for perforated sawing. To pass the saw through the piece for inside work, the saw is disengaged at *n*, and the lumber passed over the top, or the saw may be loosed both above and below the table, and passed through holes in the lumber without lifting the piece.

7367.

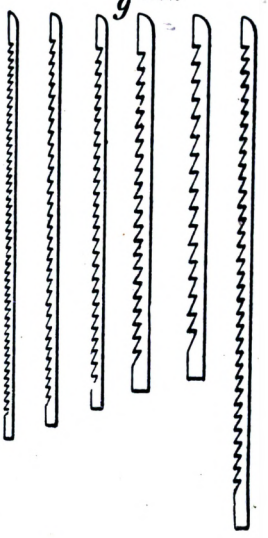

Fig. 7366 is a scroll sawing machine of a novel character, invented by J. Richards, of Philadelphia. In this machine the saw is not strained, but merely supported by means of anti-friction guides of hardened steel at its top that prevent it from turning, and give lateral and back support at the same time.

The principles upon which the machine is constructed are that the rate of cutting movement can be inversely as the weight of the reciprocating parts, and that while the cross-head beneath the table may be driven at a high speed, any weight attached to the top end of the saw limits the speed. The saw in this case, not having any weight attached to its top end, can be driven at any speed that the under gearing is capable of withstanding. 3000 of these machines have gone into use, in America mainly, but band saws being adapted to the same class of work, the reciprocating machines are not now so extensively used. These reciprocating machines, Figs. 7365, 7366, can be operated at a speed of from one to two thousand strokes a minute. *a* is the frame, cast hollow to receive the crank and shaft, which are placed inside for safety and to avoid the dust and debris from the saw. The crank and connection is of the ordinary construction, except that the joints are made with the care necessitated by the high speed at which they run.

The saws are rigidly fastened to a tubular stock or slide running in the bearings at *c*; between these bearings is a casing containing fibrous

7368. 7369

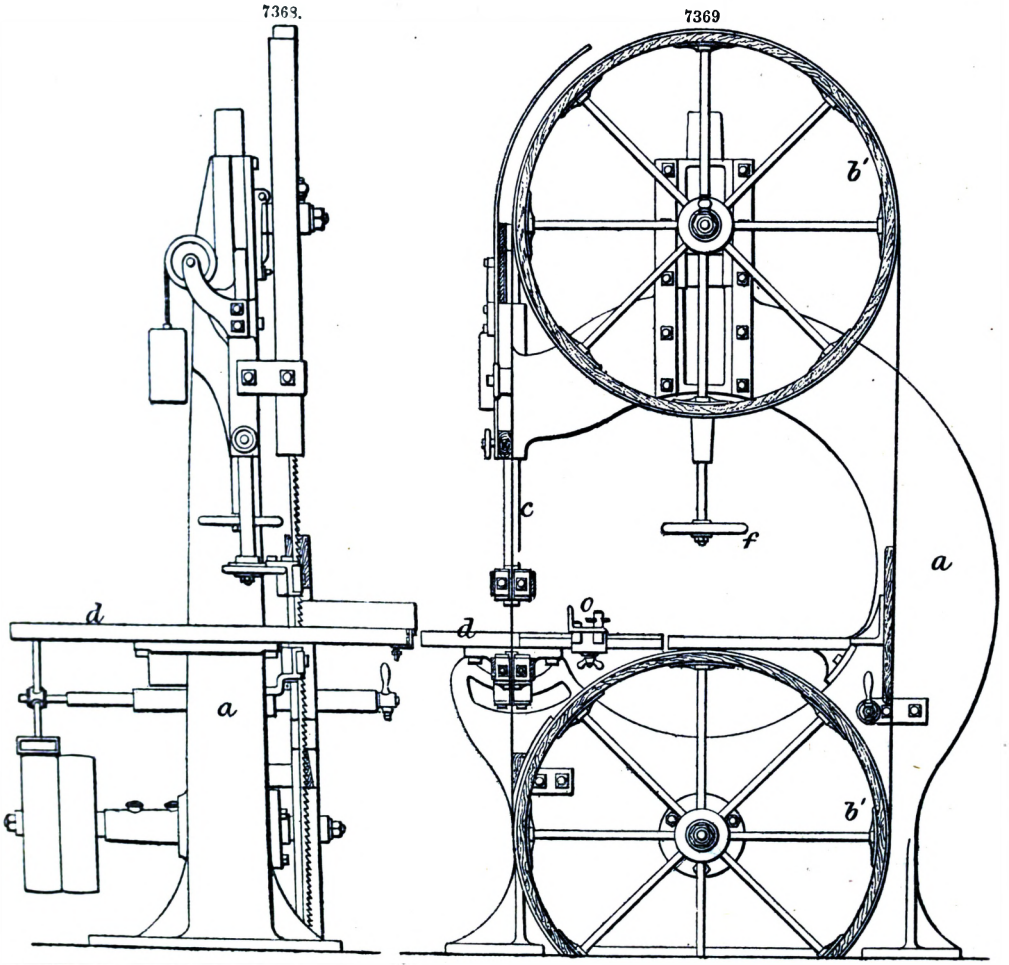

packing to maintain lubrication, the oil otherwise being rapidly absorbed by the saw-dust. Hardened steel guides are attached to the end of the sliding tube *d*; *f* is a small rotary fan for clearing the

saw-dust from the work, connected by a flexible hose with the tubular guide-stem *d*, through which the air passes, escaping at *e*. *g*, Fig. 7367, shows the form of the saws used in this machine.

Band saws were invented in the year 1808, by Wm. Newberry, of London, but because of the difficulties met with in manufacturing the saw-blades and in joining them together, no regular use of the machines took place until forty years later. Band saws are extensively employed in sawing of all kinds, not only for curved lines, but also for slitting and for timber cutting, besides being applied to various uses in other branches of industry, such as splitting leather, sawing ivory, slate, and metal.

Band sawing machines consist essentially of two wheels, on which the saw is strained like a belt, guides to support the blades, and a flat table to move the material upon. Figs. 7368, 7369, are of a plain band sawing machine. The main frame *a* is cast in one piece, arranged to support the shafts of the top and bottom wheels *b'*, *b*, the guide-stem *c*, and the table *d*. The top wheel *b* is adjusted up or down by the hand-wheel *f* to regulate the tension and the variation in the length of the saw-blades; the table *d* moves on the quadrant beneath, to various angles for bevel sawing; *o* is an adjustable gauge for sawing parallel lines.

Fig. 7370, a band sawing machine. *a* the top or movable wheel, and *b* the driving wheel; *e* is the table, which is arranged to swing on a pivot, and is held by the quadrants *c*, *c*; *d* is a casing to guard against accidents occasioned by the saws breaking.

7370.

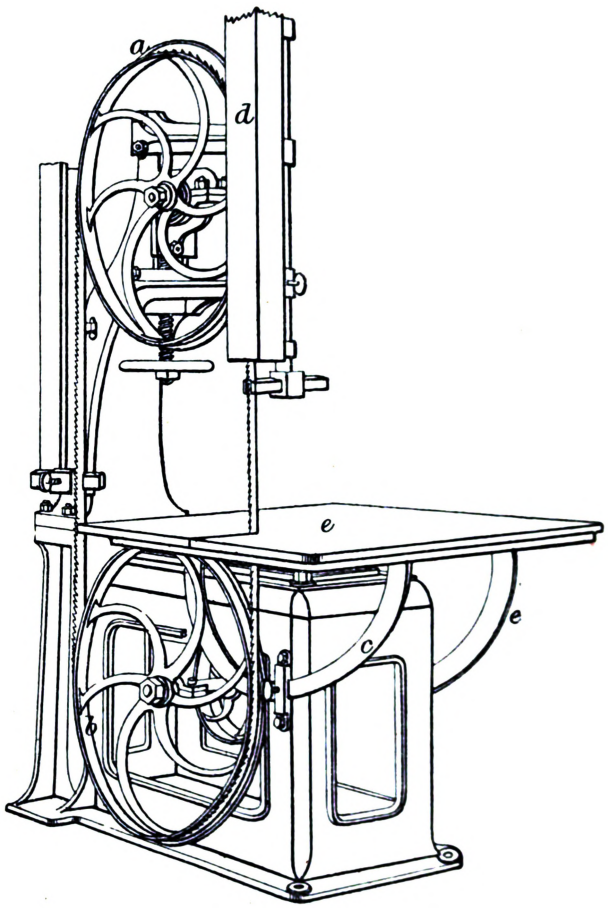

Sawing of all kinds, as an operation in wood conversion, has for its general object the dividing of pieces into parts, the separation of a mass into smaller pieces, but not the reducing such pieces to true dimensions. After dividing or sawing the timber or lumber, a further operation is required, called planing, which produces true dimensions, and smooths the surface to receive paint or varnish.

Planing, after sawing, is the next important operation in wood manufacture; machines for this purpose are all known by the general name of planing machines, but consist of three classes, that operate upon different principles. These machines consist in carriage, parallel, and surface planing machines, which will be successively noticed.

Fig. 7371 is an example of carriage planing machines, operating with traversing cutters, the plane of rotation being parallel to the face of the wood. *a* is a long frame supported on the stands *r*, *r*, *r*; *c* is a traversing carriage, on which the lumber *d* is carried beneath the cutter-head *e*; this cutter-head or cutter-bar *e* is mounted on a vertical spindle, and driven by the belt *f*, from the countershaft at *g*; *m* are belts that operate the feeding gearing at *s* by means of a vertical shaft *t* that is connected with the pulleys *n* at the top of the machine. There are three pairs of these feeding belts arranged to move the table *d* at various rates of speed, as the nature of the work may require, the rate of movement being controlled by the hand-levers at *j*. The cutter-spindle *p* is mounted in a frame that slides up and down on the front of the frame *w* to regulate the distance between the cutter *z* and the table *d*, the adjustment being made by the hand-wheel *l*, and the gearing and screw at *h*. The movement of the cutters exceeds 12,000 ft. a minute, the cutter-bar *e* being forged from fibrous iron to withstand the centrifugal strain incident to so great a speed.

Fig. 7372 is a side view of another carriage planing machine arranged with cylinder cutters, the plane of rotation being at a right angle to the face of the wood, and with cutters to plane three sides of the lumber at the same time. As the aggregate length of the cutting edges can with machines of this kind be equal to three or more times the width of the lumber acted upon, it follows that the performance is more rapid, and the endurance of the cutters greater than when traversing cutters are employed, as in the machine last described. *a* is the main frame, supported on stands *r*, *r*, *r*; *o* a carriage that has a reciprocating movement given to it by a wire rope winding right and left upon the drum *g*, the ropes being fastened at the ends of the extension pieces *m*, *m*, which allow the wood *d* to pass entirely from under the cutters *f*. A rack can be employed on the under side

of the carriage, but does not produce so smooth a movement as the winding rope. The top cutters at *f* are carried in a strong frame *p*, that is adjusted up or down on the standards *b* by the hand-wheel *j*; a pressure roll at *s* bears on the top of the lumber to hold it firmly on the carriage.

7371.

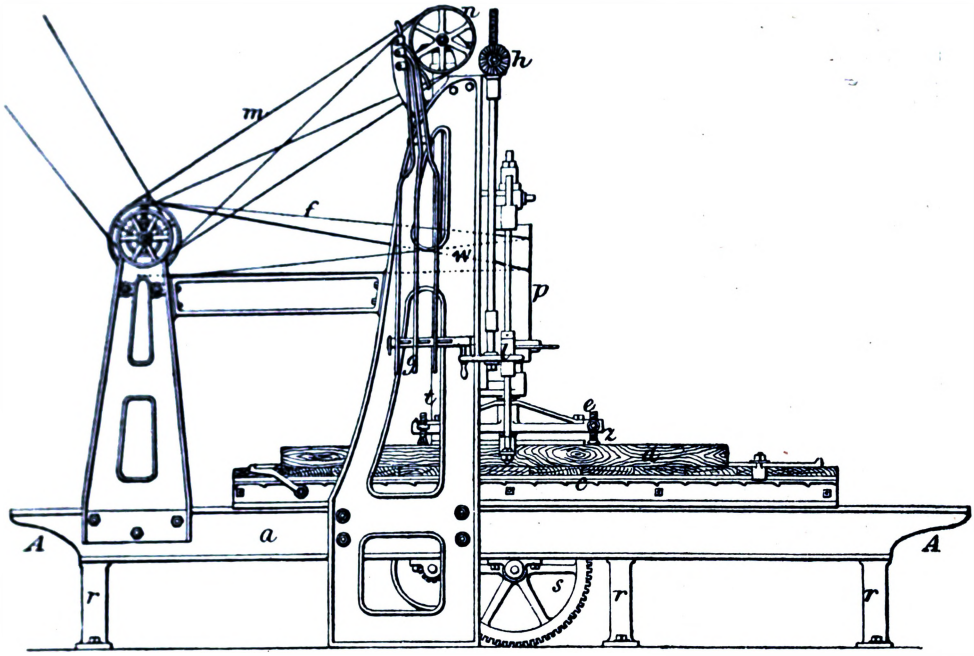

7372.

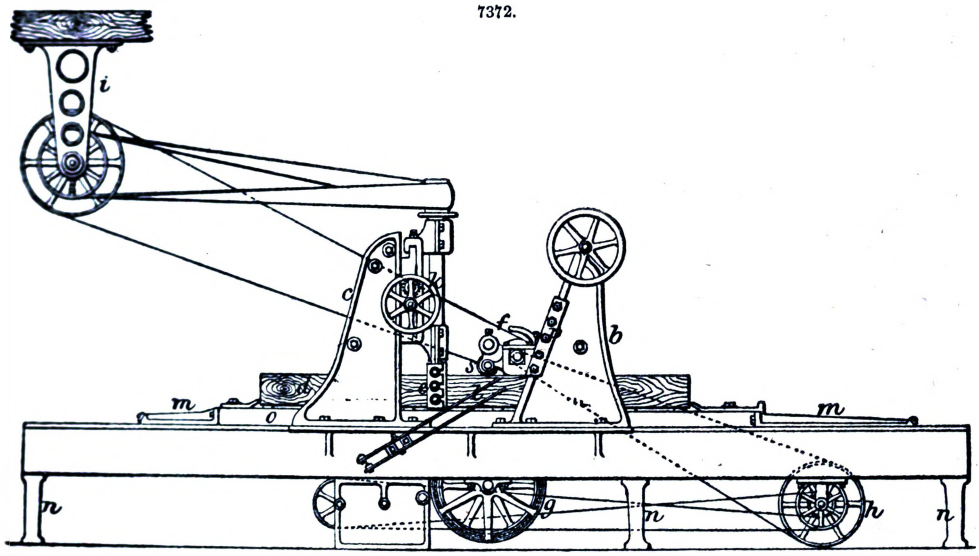

The vertical or side cutters *e*, are supported on the standards *c*, and have a transverse adjustment across the machine to suit lumber of various widths; the feeding gearing at *g* is driven by belts from the countershaft *h*, and is arranged to give either a quick or a slow movement to the carriage *o*, the rate of movement being changed at will by the levers seen at *e*; *i* is the main countershaft from which all the cutters are driven.

In carriage planing the lumber is guided in a true line by means of the ways on which the carriages move, and the cutting performed with reference to the carriage movement instead of the shape of the material. All planing done in straight lines has of necessity to be performed upon this principle, and no machines except those with carriages are suited to the preparation of lumber that requires to be straight and out of wind, as it is called.

Parallel planing machines include machines that reduce lumber to a parallel thickness, either by passing it between cutters that are opposite to each other on different sides of the lumber, or when only one or two sides are planed, by passing the lumber between the cutter and stationary

gauges or beds. The feed movement is continuous in machines of this class, the lumber being usually fed by means of rollers, that produce a regular forward movement in one direction. The effect produced in parallel planing is what the name indicates, that of giving parallel dimensions to the lumber, but not making it straight nor out of wind, as in the case of carriage planing.

The use of parallel planing machines is or ought to be confined to lumber that is flexible enough to be straightened by the feeding rollers and pressure bars in passing through the machine.

Parallel planing machines, as a class, are subdivided into planing and matching machines for manufacturing flooring, ceiling, or other lumber that is tongued and grooved; planing machines for dressing one or both sides of boards, technically known as surfacing machines; and moulding machines, adapted to the preparation of mouldings, and other pieces that have not flat surfaces. The difference between the first and third class of machines named being merely in capacity and size.

Fig. 7373 is a side view of a planing and matching machine, arranged to operate on three or four sides of the lumber at the same time.

7373.

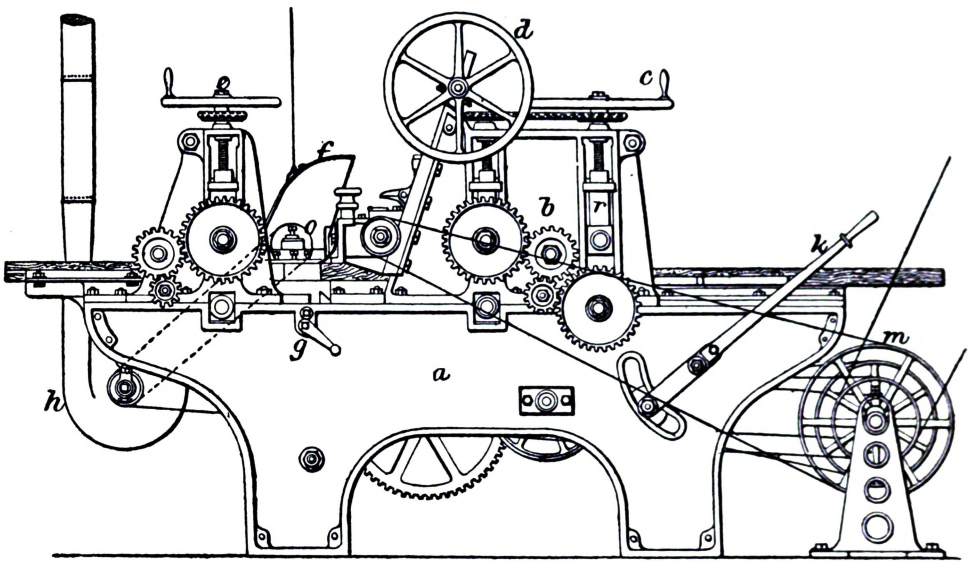

The lumber is forced through the machine by three pairs of feeding rolls, that are connected by expanding gearing, and are pressed down upon the lumber by springs *r*, of vulcanized india-rubber. *a* is the main frame, on which is bolted the housing *b*, which carries the first pair of feeding rolls, the top cutters, and the pressure bars or rollers; the top rolls are adjusted simultaneously by means of the hand-wheel *c*. The top cutters are adjusted up or down by the hand-wheel *d*; the rear, or clearing rolls, are adjusted by the wheel *e*. The vertical, or side cutters, are seen at *o*, under the hood *f*, for collecting shavings and dust by pneumatic suction. These side cutters have a traversing adjustment across the machine, and are moved by the crank at *g*. The shavings are collected in the hood *f*, and are then drawn into the fan at *h*, and expelled through the pipe *i*, being carried to a stoke room or elsewhere, as required. The feed movement is stopped or started by means of the lever *k*; *m* is the countershaft which drives all the cutters and the exhausting fan at *h*. When the machine is used for planing but one side of wide lumber, the side cutters at *o* are easily removed, and the lumber allowed to pass over the top of the spindles, when the distance between is not enough to accommodate the width of the lumber.

As this class of planing machines is more extensively used than any other, especially in the preparation of building material, and as no dimensions have been given in describing other machines for planing, it may be a matter of interest, and convey a general idea of the proportions in such planing machines, to note the following dimensions in connection with Fig. 7373;—

The machine receives lumber for surfacing only, to 24 × 5 in.; planes, tongues, and grooves to 14 × 5 in. Main cutter-block, 6½ in. diameter, 24 in. long, 3 cutters; side cutter-blocks, 6½ in. diameter. Aggregated width of belts for driving cutter-spindles, 17 in. Rotary movement of cutters, 6750 ft. a minute. Aggregate of cutter movement for each block, 20,250 ft. a minute. Number of revolutions of cutter-spindles, 4000 a minute. Top cutter-spindle, 2 in. diameter, steel. Side cutter-spindles, steel, 1½ in. diameter. Rate of feed from 40 to 60 ft. a minute. The wheels of the expansion gearing are made of steel throughout.

Fig. 7374 is of a planing machine for moulding and matching, arranged with six cutting spindles and two pairs of feeding rolls. *a a* is the main frame; *b*, *b*, feeding rollers; *c*, *c*¹, top cutters; *d*, side cutters. There are also bottom cutters at *e* and *f*. The top cutters are adjusted up and down by means of the hand-wheels *g* and *h*; the top feeding rolls are raised or lowered by the hand-wheel *i*.

The top cutter *c'* is intended for straight cutters that produce a flat surface, which can then be

moulded by the second top cutter c; the spindle at f can be arranged with circular saws, to divide the lumber into several pieces after it has been planed. All the cutter-spindles are driven from the shaft at m. The feeding rollers b, b', are hung in swing-frames that are pivoted on the axis of a shaft, from which they are driven, and rise and fall in a curve described from that centre.

7374.

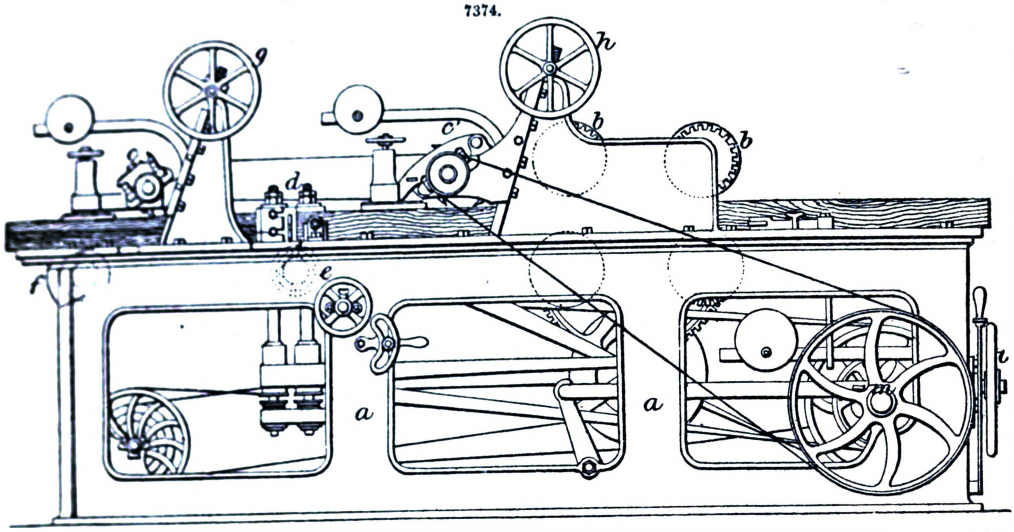

7375.

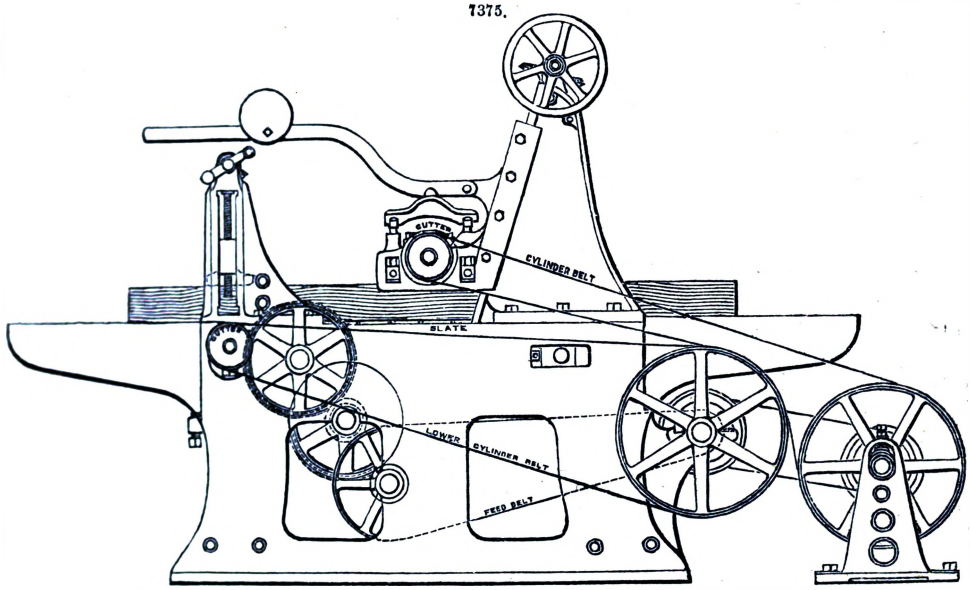

Fig. 7375 is a parallel planing machine to plane on one or two sides, the top and bottom of such lumber as is not required to be reduced to a width at the same time. The feeding movement of the lumber is in this machine produced by means of an endless revolving apron or bed, composed of bars linked together, that are carried on the two axes at a and c, and move like a belt beneath the top cutters at d. These bars being corrugated, and presenting a flat surface of two or more feet in length under the cutters, carry the lumber forward with great force. The bottom cutter $a\,e$ is driven from the shaft f, which is in turn driven by the frictional contact of the belt g that gives motion to the top cutters d; h is a dead bar opposite the bottom cutters to hold the lumber i at that point when being planed on the under side. The saddle m, on which the top cutters and pressure rollers are mounted, is adjusted up or down on the standards n, as in the other machines noticed. These machines were invented about 1850 by an American named Farrar, and were designed to avoid the celebrated Woodworth patents, that for a long time controlled and hampered the progress of wood planing in the United States. The chain-bed planer, however, achieved more than its inventor had expected, and thousands of machines have been made upon this plan, which for some purposes has advantages over roller feeding machines.

Figs. 7376, 7377, show a moulding planing machine arranged to act upon all four sides of the lumber at the same time, producing various profiles, as the shape of the cutters may determine.

A is the framing; B a table outside the framing; this table is free to rise and fall to the extent of about 9 in. more or less. C a projecting leg from the bottom of the table furnished with dove-

7376.

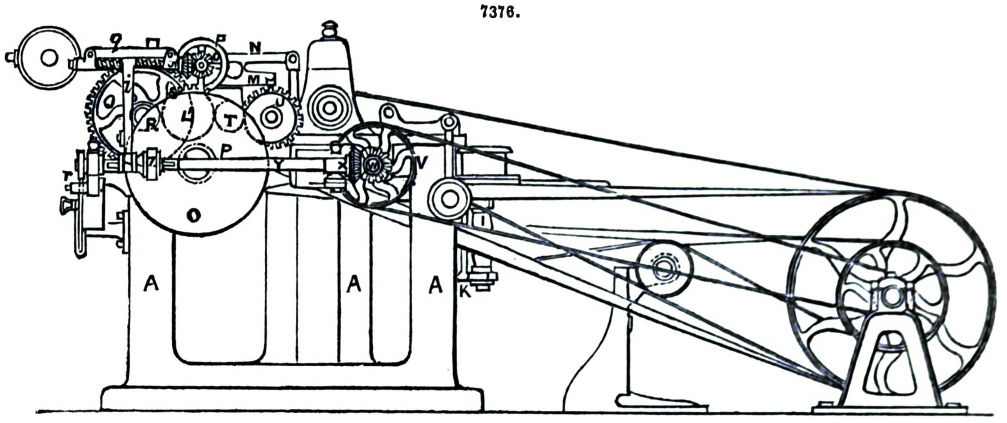

7377.

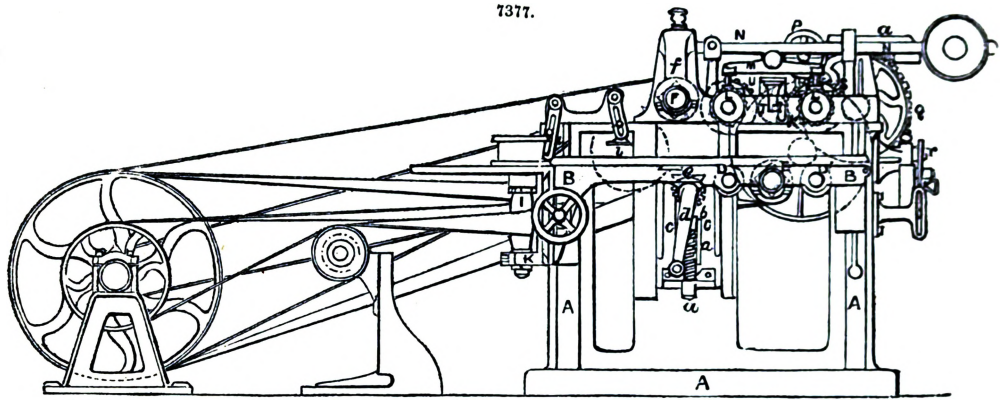

tails which slide in grooves in the frame of the machine. Up-and-down motion is imparted to the table through the screw *a* working in a nut *b* fixed to the frame A; the screw is driven by the toothed wheel *c* through the crank-handle *d*, the wheel *c* driving a mitre-wheel *e* keyed on to the top of the screw. The table B carries the bottom rollers D, D, and the revolving bottom cutter-shaft and cutters E; F is the top cutter-shaft and cutters extending beyond the frame of the machine and over the table B; the outer end of this top cutter-shaft revolves in a bearing carried by the projecting arm *f*. The table is formed with an aperture to allow of the working of the vertical cutters; these cutters are carried on shafts to which pulleys I, I, are keyed; the pulleys and shafts are connected to plates K, themselves attached by bolts to plates sliding in dovetails on the table B. Curved slots are made in the plates K, through which studs pass to allow of the plates being fixed at any inclination required in order to cause the cutters to cut the wood on either or both sides to the angle required. L, L^1, are the feed-rollers; M is a beam with two depending legs terminating at bottom in a point; each of these points enters a V-recess on the top of the bearings of the feed-rollers. This beam M is free to move on a centre to allow the rollers to oscillate when the wood is first fed on to the table. N is a weighted beam pressing on the beam M; *k* is a roller carried by a bracket *l*, the top of which works in a box, and is continually pressed upon by a spiral or other spring; the object of this roller is to keep the wood in contact with the bottom cutter, and to steady it under the action of that cutter.

In the feed arrangements, O is the disc-wheel; P a pinion on the boss of the disc-wheel; this pinion gears into the toothed wheel Q, on the boss of which there is another pinion R, which drives the wheel S keyed on the shaft of the feed-roller L^1. T an intermediate pinion for driving the wheel U on the shaft of the other feed-roller L; V a pulley driven by a belt; it carries a mitre-wheel W in gear with another mitre-wheel X on the shaft Y; Z a clothed friction pulley free to travel to and fro on a feather on the shaft Y when moved by an arm l^1. On one end of this screw arm is fastened a mitre-wheel which is geared into by another mitre-wheel *o* on a shaft which is moved by a hand-wheel *p*. The arm l^1 carries at top a pointer, not seen in the drawing, to indicate on an index plate *q*, the back of which is shown, the rate at which the wood is driven through the machine by the feed-rollers.

The operations of sawing and planing wood that the machines thus far noticed are directed to, may be called general operations, through which nearly all lumber used for every purpose must pass. After planing, operations in woodwork become diversified; the material is then bored, mortised, tenoned, or shaped into various forms for ornament or special uses.

Mortising machinery consists of rotary and reciprocating machines; in the first the wood is cut away by rotary tools that have also a vibratory or reciprocating motion, to produce oblong recesses the length of the mortise. Rotary mortising machines are extensively used in France and in England, where they are applied to all kinds of work, mainly because mortising can be performed in this manner on machines that may be also used for other purposes; but in the United States and Sweden, where in wood manufactures the division of labour is carried further, and where each operation requires a separate machine, rotary mortising machines are only applied to the heaviest class of work when the material is too heavy to be handled for reciprocating machines, when the material can be bored for bolts, or faced at the same time that the mortising is performed, and when mortising such pieces as cannot be held firmly enough to resist the shock of reciprocating machines, especially the parts of chairs that are cylindrical or irregular in form.

In the largest rotary mortising machines used for mortising the framing of railway carriages, bridge timbers, and so on, the reciprocating motion is given to the cutters, which are usually of a diameter equal to the width or one-half the width of the mortise, so that one or two movements will complete each operation.

Figs. 7378, 7379, are elevations of a rotary mortising machine. Fig. 7378 is a front view; Fig. 7379 a side view. *a* is a strong standard, *b* a saddle fitted to move up and down on planed guides on the front; the spindle *c* is mounted in a second saddle that has a transverse movement across the saddle *b*, and is moved by the hand-wheel and screw at *d*.

The saddle *b* is moved up and down on the front of the column *a* by means of the wheel *e*, and the rack and pinion *f*; *g* is a long carriage on which the timber *h* to be mortised is placed. This carriage *g* is moved either by hand or power by means of the gearing in the casing *i*, operated by the hand-wheel *j* or the belts *k*, as the motion of the work demands. The carriage is supported on large rollers *l*, *l*, *l*, to avoid friction and permit hand movement, which is essential in many operations. The wood *h* is held by clamps *m*, and is placed on the carriage in such a way that stops determine the position of the holes or mortises, which therefore require no laying out, their position being determined by stops or gauges *q*, *q*, *q*, when the timber is properly adjusted. The vertical or lateral movement of the cutter *o* is regulated by the four stop-rods *p*, each provided with collars to determine the movement of the saddle *b*, stopping at eight positions, and giving dimensions and lateral position to the mortises accordingly.

7378.

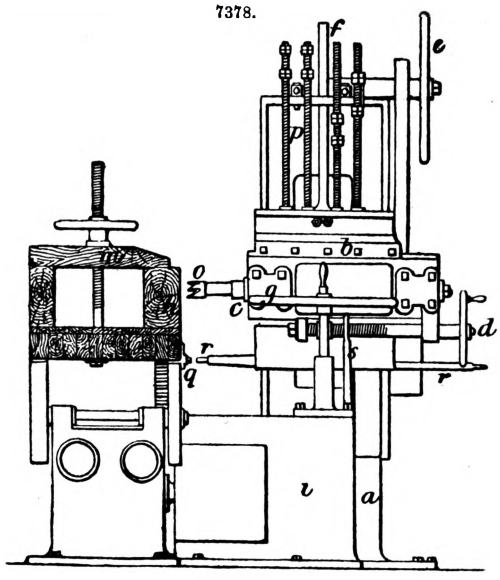

7379.

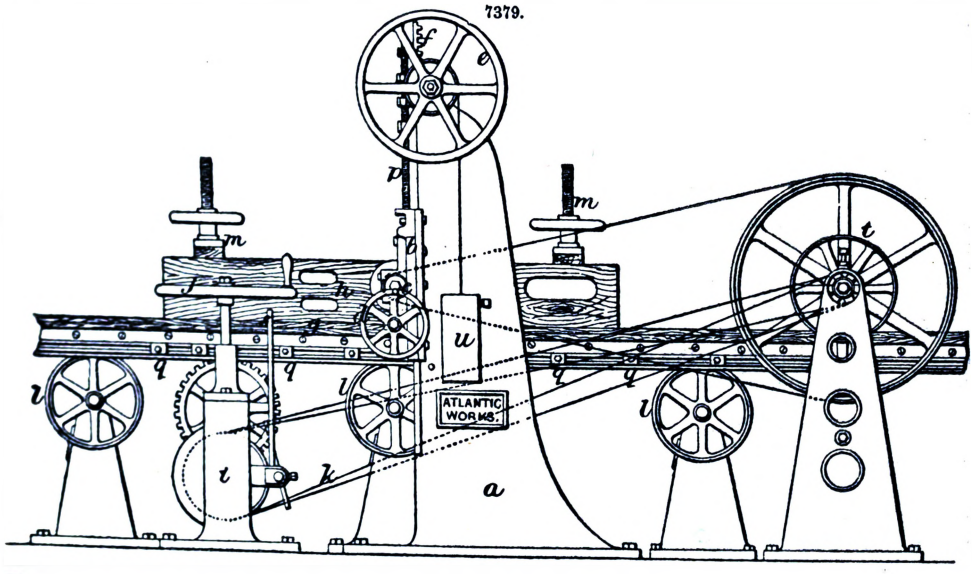

The length of mortises and the distance between them is also determined by the stops *q* that slide and are fastened in a groove on the front of the table *b*; these stops *q* come in contact with the stop-rod *r* that is operated by hand from the back of the machine. By setting these stops *q* and the vertical stops *p* to suit the number and position of the mortise, any number of pieces can be mortised or bored precisely alike. The power movement of the table, which is 100 ft. a minute

7380.

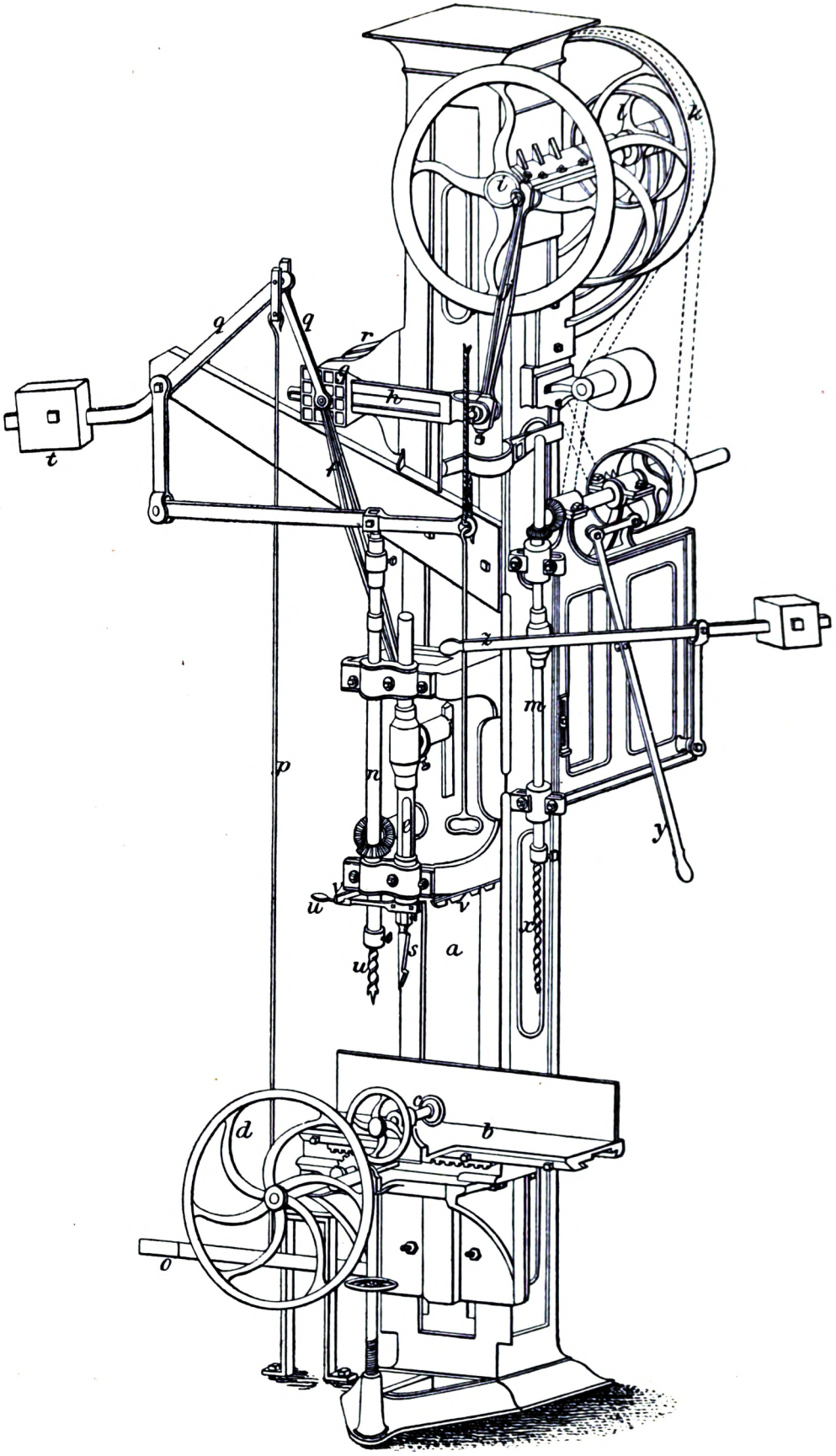

each way, is controlled by the lever *s*, which with the wheels *d*, *j*, *e*, and the stop-rod *r*, are all within reach and control of the operator; *t* is the countershaft from which motion is given to the cutter-spindle and the traversing gearing at *i*; *u* is a counterweight to balance the saddle *b* and spindle *c*.

Small rotary mortising machines have both rotary and reciprocating motion of the cutters, the wood remaining fixed, the rotary motion being usually 7500 revolutions a minute, and the reciprocating motion 400 strokes a minute.

Reciprocating mortising machines are constructed under various modifications suited to heavy or light work, and for deep or shallow mortises; the mechanism and movements being, however, much the same in all machines, consisting essentially in a crank-shaft, a chisel-bar, and tables or carriages to present and move the material.

The greatest distinction in such machines is between those that have a chisel feed, where the chisel and chisel-bar, in addition to a reciprocating motion, has also a graduated feed movement, and machines that are arranged with a feed movement of the table or carriage, that raises the wood to receive the action of the chisel. In the first, as the chisel is fed to the wood, or down into the mortise, it is evident that the relative position of the crank and chisel has to be changed to the extent of the feed movement; in other words, there has to be either an elongation or a contraction of the connections between the chisel and the crank.

Fig. 7380 is a perspective elevation of a reciprocating mortising machine, with a graduated stroke, by Lane and Bodley, of Cincinnati. The machine was invented by Thomas Guild, in the year 1852.

The machine has been selected as an example, because of the long test that it has had in all countries, and from the fact that there were in 1873 more than 3000 such machines in use, including those arranged for wheel-hubs and other special purposes.

Fig. 7380 is what is termed a railway-car mortising machine, because of an extra boring spindle, and the nature of the table; the chisel-bar and reciprocating parts being the same on all machines, except as to the range of the stroke, which varies from 3 to 10 in. *a* is the main column; *b* the table on which the material is supported; *c* is a clamping screw to hold the material; and *d* a wheel for traversing the table *b*. *e* is the chisel-bar; *f* the connection between the chisel-bar and the sliding block *g*; *h* is a pivoted vibrating lever that receives motion from the crank-wheel *i* by means of the connection *j*; *l* is the driving pulley where the power is applied; and *k* a pulley to drive the boring spindle *m*, and also the boring spindle *n*, on the other side of the machine; *o* is the treadle that puts the chisel-bar in motion and controls the stroke by means of the rod *p*, which extends up to and operates the toggle-links *q*, *q*. The vibrating lever *h* being pivoted in a strong bearing at *r*, the sliding block *g*, when in the position shown, has only an oscillating motion on this axis *r*, and the connection *f* and chisel-bar *e* are still; but by depressing the treadle *o* the block *q* is forced out upon the lever *h* by means of the links *q*, *q*, and the chisel-bar *e* is gradually set in motion. By this action the chisel *s* has not only a reciprocating motion imparted to it, but is, by reason of the connection *f* coming into a vertical position, *fed downward at the same time*, so that the depth of the mortise cut may equal the whole stroke of the machine, the chisel rising at each stroke to the *same position on the up-stroke*, regardless of its range.

Attention is called to this feature as one that has, more than any other, led to the extended use of these machines. To cut a mortise 9 in. deep, a crank 5 in. long is sufficient, so that the whole stroke is utilized; but with variable crank motions, such as are often employed in constructing mortising machines, the stroke has to be at least twice the depth of the mortise, with one or more inches added for clearance. This will be understood by noting that when the block *g* is drawn back to the position shown in the figure, the chisel *s* is raised to the top of the stroke, by reason of the diagonal position assumed by the connection *f*. The weight *t* stops the chisel motion by drawing back the block *q* upon the lever *h*, when the treadle *o* is relieved. The chisel is turned from right to left by the handle *u* locking into the catches at *v*.

7381.

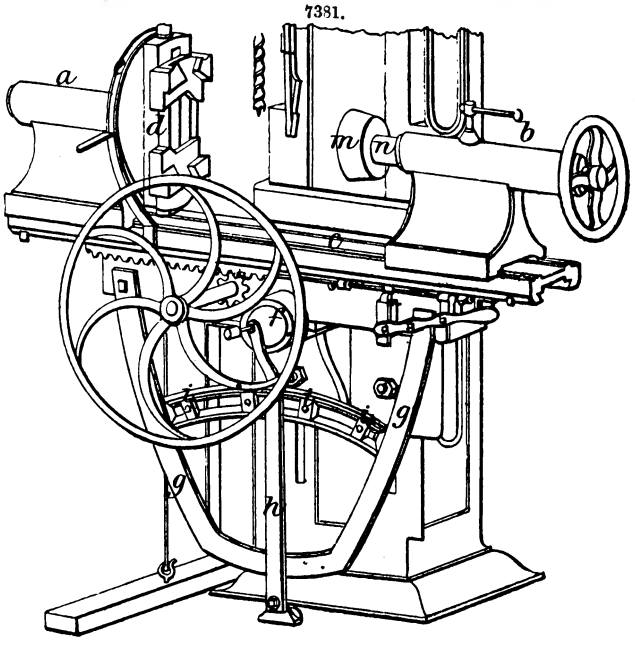

The boring spindle *n* and auger *w* are used for starting mortises in hard wood, the spindle remaining fixed in the same plane as the chisel-bar *e*. The boring spindle *m* and auger *x* have a transverse adjustment of 16 in. across the table or the material, also a vertical range of the same length; the transverse adjustment is given by the lever *y*, and the downward or feed movement by the lever *z*.

For mortising wheel-hubs, a special carriage, Fig. 7381, is employed; the head and tail stocks *a*, *b*, slide upon the table *e*, and are set to suit the length of the hub, one end of which is fastened in the

chuck *d*, provided with a plate *e*, divided like the disc of a wheel-cutting machine, with spaces for the position and number of the mortises; the taper of the mortise and the flare of the spokes are provided for by swinging the carriage *e* upon the pivot *f* by means of the quadrant *g* and the lever *h*, which has stops *i*, *i*, *i*, that are set to suit the kind of wheel-hub that is being mortised.

The disc-pivot *m* is loose upon the poppet-spindle *n*, and revolves with the hub. Two hundred hubs of medium size can be mortised on one of these machines in ten hours with an accuracy that is not attainable by hand.

The tendency in wood manufacturing at the present time is to the use of rotary mortising machinery for nearly all classes of work that have heretofore required the heavier reciprocating machines; and there is no doubt that when there has been the same amount of attention given to the improvement of rotary as there has been to reciprocating mortising machines, there will be still more of them used.

Reciprocating machines that have a positive connection between the chisel and crank, and are arranged to feed the lumber up to the chisel, as in Figs. 7382, 7383, are simple in construction and

7382.

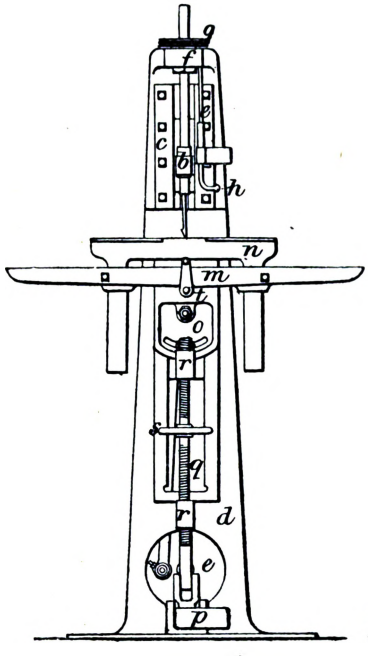

7383.

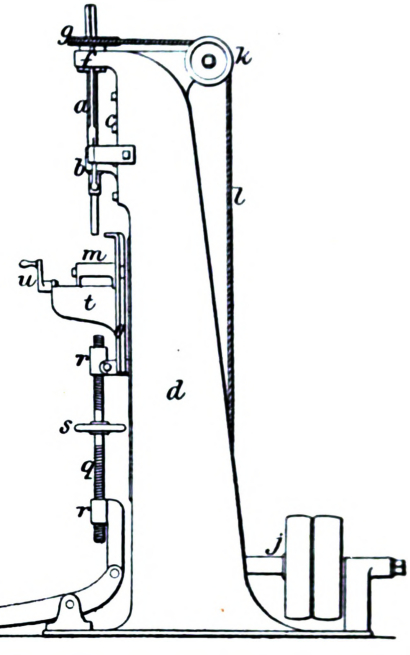

free from many objections that apply to those with a chisel feed. The chisel-bar *a* is cylindrical, with a bearing in the driver *b*. This slide or driver *b* is connected to the crank-wheel *e* by a rod or connection that passes up on the inside of the main standard *d*. The driver *b* moves in the guides *c* on the front of the standard *d*, moving the chisel-bar *a* up and down through the top bearing at *f*. Surrounding the bar *a*, in this top bearing *f*, is a shell connected with the grooved pulley *g*, through which the bar *a* plays freely, but is held from turning by means of a feather. On the under side of the pulley *g* are two stops that come in contact with the rod *h*. The belt *i* passes around the pulley *g*, over the idle pulleys, and around the driving shaft at *j*. This belt maintains a constant torsional strain upon the pulley *g*, which, as soon as the rod *h* is drawn down, will commence to rotate; but by releasing this stop-rod *h* instantly, the pulley *g* makes but a half rotation, until the stops on its under side arrest its movement, the belt *i* serving to both turn the pulley *g* and the chisel-bar, and to hold them firmly after being stopped by the rod *h*. By this arrangement the chisel is instantly turned to the right or to the left to complete both ends of the mortise by the operator simply depressing the bent handle at *h* with his hand.

The wood to be mortised is placed upon the table *m*, and is held down by the guard *n*, which is set at various heights to suit the depth of the piece. The table *m*, with a sliding saddle *o*, is raised by the treadle and the screw *q*. This screw has right and left hand threads fitting into the pivoted bearings *r*, *r*, and serves to adjust the height of the table *m* by turning the hand-wheel *s*. The table *m* is moved out or in upon the bracket *t* by the winch *u*. The bracket is pivoted so as to be set at various angles for making diagonal mortises.

Machines for cutting tenons in woodwork are constructed under two general modifications, one with the cutter-spindles parallel to the tenons, and the other with the cutter-spindles transverse to the tenons. Figs. 7384, 7385, are of one of the first kind of tenoning machine, and Figs. 7386, 7387, one of the second.

Referring to Figs. 7384, 7385, *a* is the main frame; *b* supports which also carry the bearings *c* of the driving shaft *d*; *e*, *e*, are the main cutter-spindles, mounted on the movable saddles *f*, *f*, which are adjusted up and down upon the stand *g* by means of the screws *h* and *i*, the top saddle *f* being raised or lowered by the screw *i* and hand-wheel *j*, and the two saddles separated or brought together by the screw *h*; thereby gauging the thickness of the tenon between the cutter-heads at

k, or its position on the piece, by raising or lowering both saddles *f* and *f* without changing their relative position.

7384.

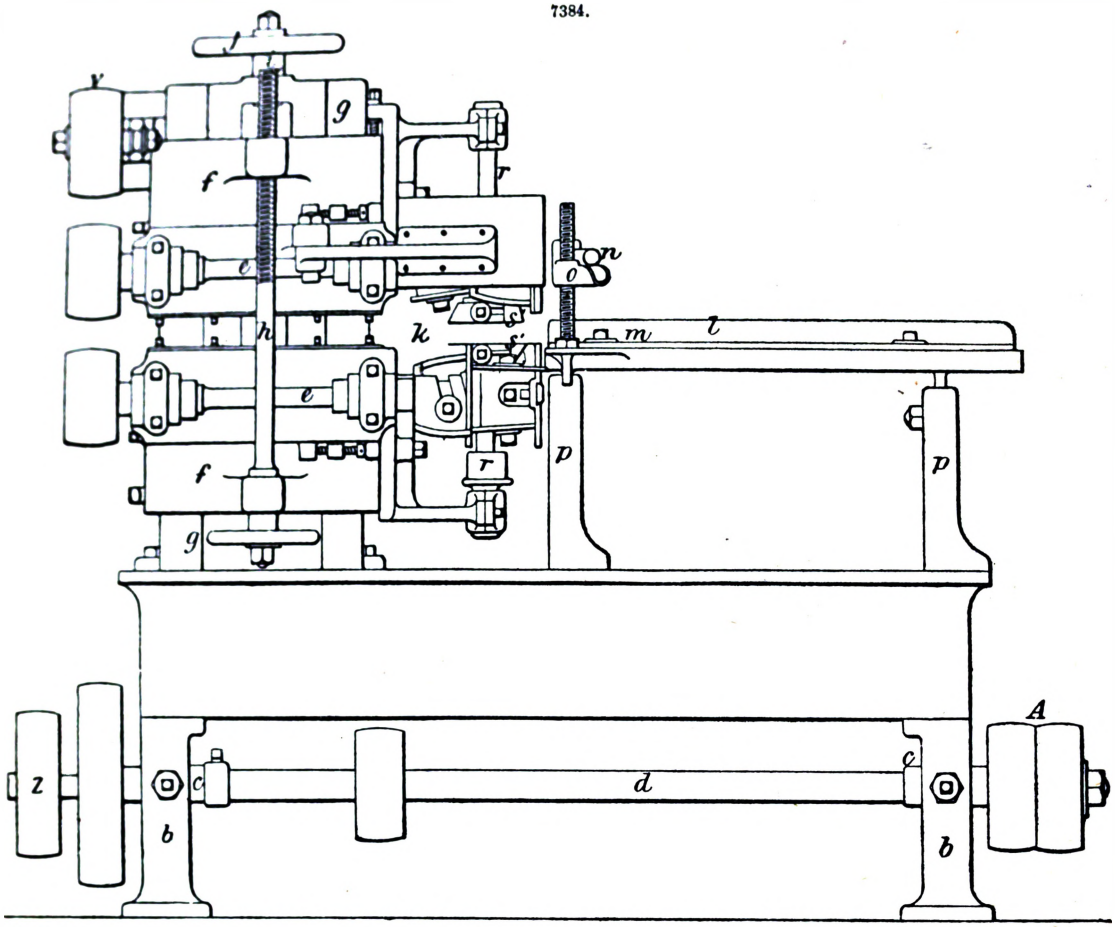

The piece to be cut is placed on the carriage *l* against the guard *m*, and is held by the clamping lever *n*, which is, with the handle *o*, grasped by the operator's hand. The carriage *l* is mounted on rollers supported in the two brackets *p*, *p*; this allows it to move freely by hand without the aid of power-feeding mechanism, which is not suitable for the operation, the feed requiring to be fast at some points, slow at others, and at all times regulated by the perception and skill of the operator.

r, *r*, are coping or scribing spindles, for shaping the shoulders of tenons for moulded pieces, the cutters *s'*, *s'*, rotating in a plane parallel to the face of the tenon. These spindles receive motion from the vertical shaft *t*, Fig. 7385. The tension of the belt *u* that drives the main cutter-spindles *e* is regulated by the pulley *v* carried on the lever *w*, which allows the spindle *e e* to be adjusted without changing the stress upon the belt. In case of the belt *u* breaking, a spring *x* is provided to stop the weight *y*. Power is communicated to the machine, when from above, to the pulley *z*, or when from below, to the fast and loose pulleys at A.

Boring, after tenoning and mortising, is next in importance among the regular operations in wood framing. Boring machines for regular purposes consist in vertical and horizontal machines, as they are termed.

Figs. 7388, 7389, are of a vertical machine arranged with two spindles that have a lateral adjustment of 10 in., and a vertical range of 18 in. *a* is the main frame or supporting standard on which all the parts are mounted; *b* is a strong bracket bolted on the front to support the sliding carriage *c*; this bracket *b* is pivoted, and can be set to various angles on the front of the column *a*, so that the timber *d* can be bored at various angles; *e*, *e*, are boring spindles carried in bearings formed in the brackets *i*, *i*, and driven by the bevel-wheels *m*, pulleys *n*, *n*, and shafts *o*. The brackets *i*, *i*, are moved out or in upon the frame *r* by means of racks and pinions operated by the wheels *s*, *s*. The spindles *e*, *e*, and augers *f*, *f*, are fed down into the wood *d* by means of the levers *t*, *t*, and the handles *u*, *u*, and are lifted and kept at the top of their stroke when not in use by means of the weights *v*, *v*. The shafts *o* move loosely through the pulleys *n*, *n*, and the bearings *z*, to allow of the lateral adjustment of the spindles *e*, *e*, and brackets *i*, *i*. The table or carriage *c* is moved by the hand-wheel *g* and a rack and pinion. The wood is clamped by the sliding jaw *h*.

Figs. 7390, 7391, are elevations of a horizontal boring machine with a single spindle. *a* is the main standard to support the spindle, *b* a stand to support the lumber, and *c*, *c*, auxiliary stands to support the ends of long pieces. The spindle *d* runs in bearings attached to the movable frame *e*, which slides up or down on the stand *a*, and is operated by the hand-wheel *f* and a rack and pinion

at *g*. The frame or saddle *e* is counterweighted by the weight *h* and a wire rope *i*, passing over the pulley *k*. Motion is given to the spindle *d* by the belt *l l* from the countershaft *m*, the swinging

7385.

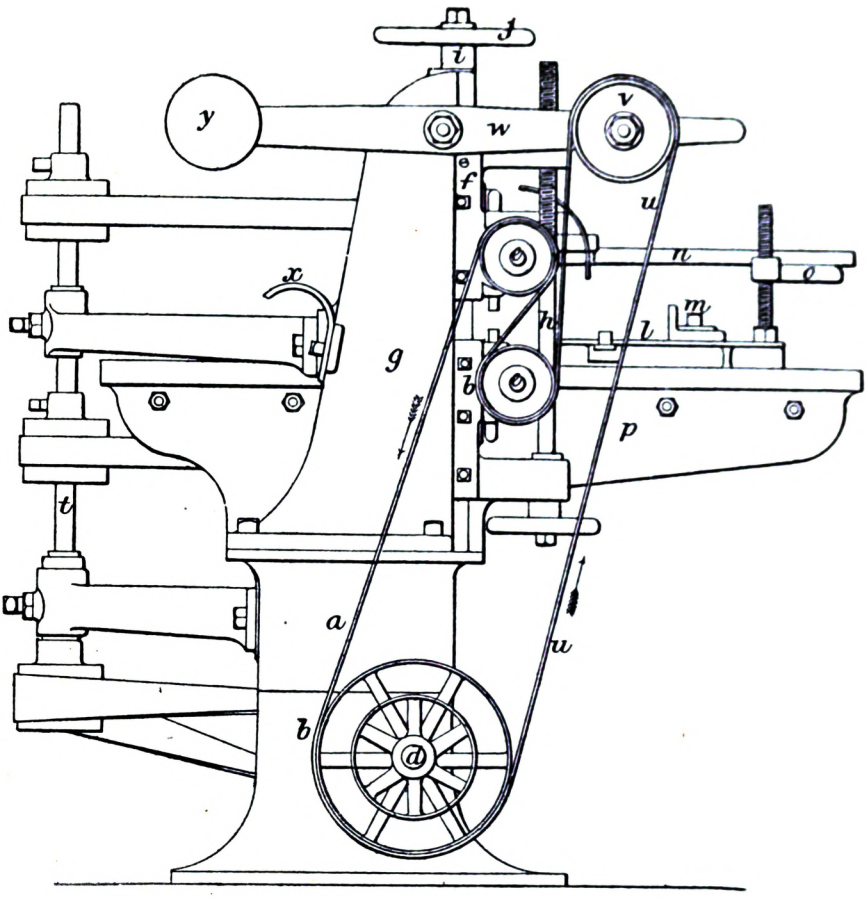

7386.

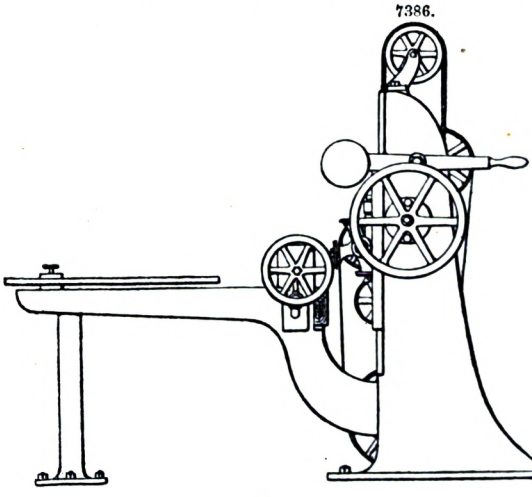

7387.

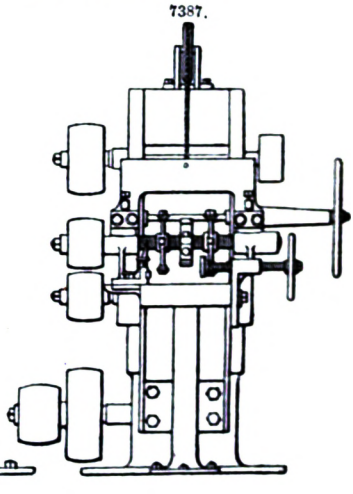

frame *n* and weight *o* compensating for the movement of the spindle *d*, and keeping the tension of the belt *l* uniform. The spindle *d* is moved forward by the handle *r*, which is attached to a sliding rod *s* set parallel to the spindle *d*. All the parts are mounted on the sole-plate *t*, which forms a base for the machine. The main column *a* and the boring spindle with its attachments are often furnished and operated with the machine, Figs. 7378, 7379, in addition to the mortising attachment, so that the boring and mortising may be done at the same time, or either separately, the same carriage answering in both cases. For work of the heavier class the lateral adjustment of the spindles in

horizontal boring machines is necessary, because of the great inconvenience, and sometimes the impossibility, of moving the lumber instead of the auger.

7388.

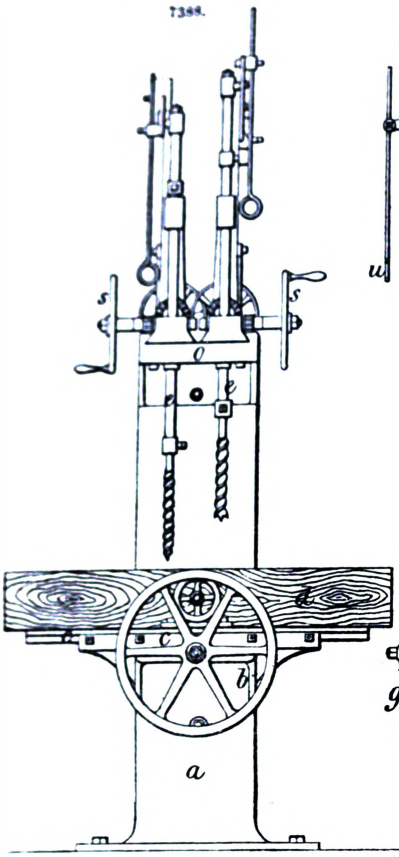

7389.

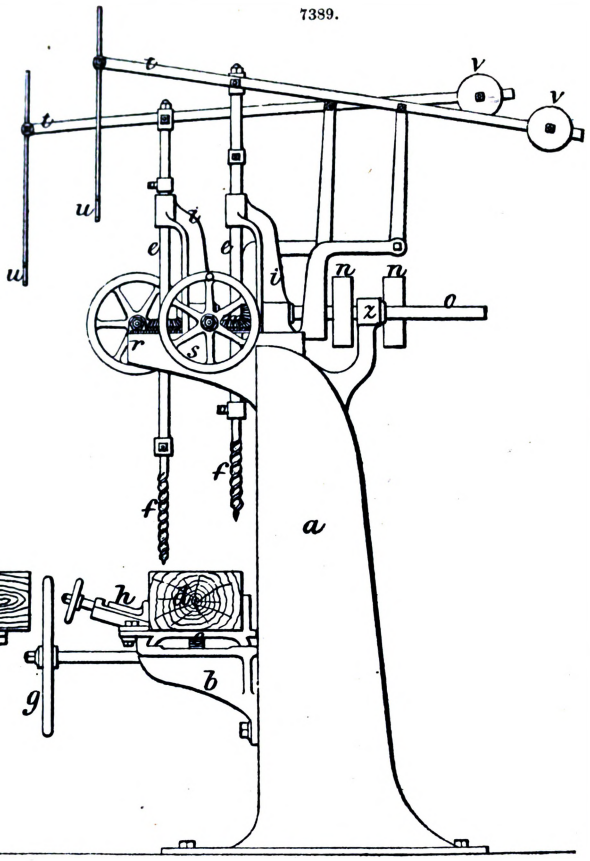

7390.

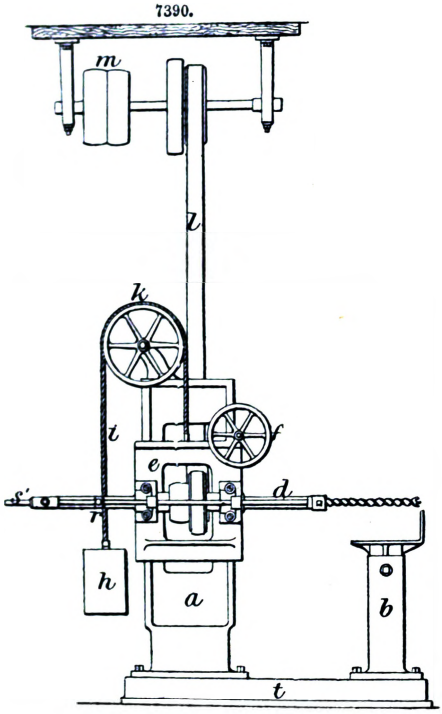

7391.

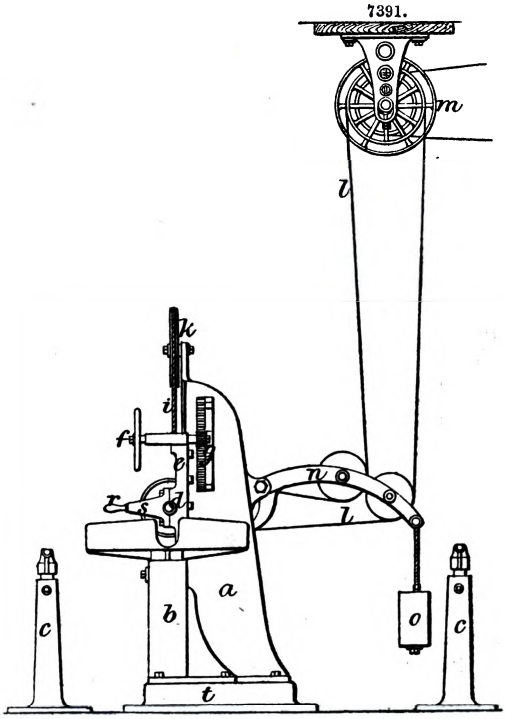

Regular shaping comprehends a variety of operations that might be termed planing, sawing, moulding, and so on; but the term is used to convey an idea of special as distinguished from general operations, where there is not a duplication of pieces nor a large number prepared. Irregular shaping applies to the preparation of pieces that have irregular outlines, pieces that cannot be moulded or planed in straight lines or in true circles. The lumber in irregular shaping, as it can neither be revolved about a fixed centre nor moved in straight lines, has to be formed by patterns with an outline corresponding to the shape of the finished piece required.

Referring first to machines for regular shaping, they consist mainly of hand-feeding machines; the irregular character of the work not justifying or requiring the complication that would be unavoidable in presenting and adjusting the material automatically. Figs. 7392, 7393, are of a

7392.

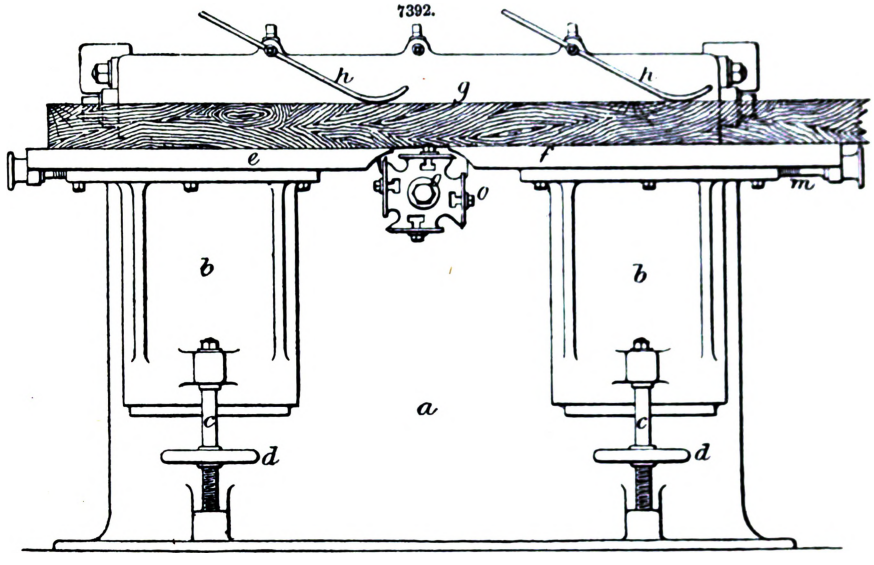

shaping machine that has a great range of adaptation for moulding, grooving, rebating, bevelling, and shaping; *a* is the main frame, cast in one piece; *s* is the cutter-spindle, and *o* the cutter-block; *t* the driving pulley; *e* and *f* are tables on which the wood *y* is moved. Tables *e*, *f*, have an independent adjustment vertically by means of the screws *c* and hand-wheels *a*, also a horizontal adjustment on the top of the brackets *b*, so that the throat at the cutters may be closed up or widened, as the nature of the work may require, by turning the screws *m* and *n*. The gauge *g* can be set at various angles for bevelled work, and is supported on the main frame independent of the tables *e* and *f*, so that they can be raised or lowered without changing the position of the gauge. The bracket *b* is moved forward or back upon the top of the main frame *a* so as to receive pieces of any size within the capacity of the cutters; or in case of transverse cutting for gains or notches, the guard *g* and bracket *b* may be removed, to leave the top of the machine entirely clear. *u* is a strong bracket bolted to the main frame to support the spindle *s*.

7393.

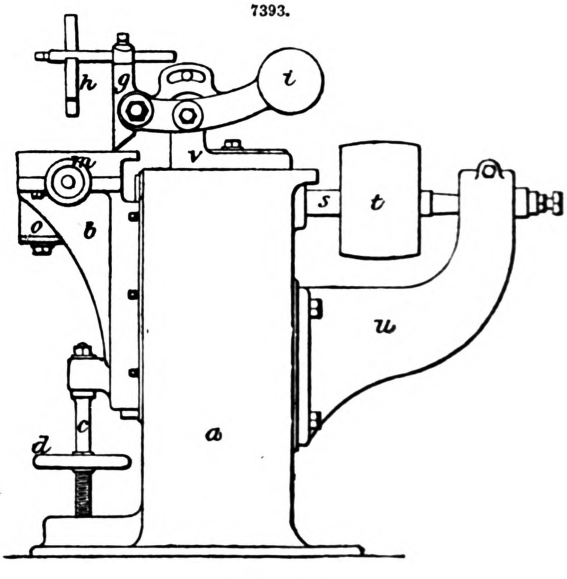

Figs. 7394, 7395, are of a cutting and shaping machine, intended mainly for cutting transversely gains, notches, or shaping the ends of framing for railway-carriage work, to which the machine is especially adapted.

Its functions and movements conform somewhat to those of a metal-shaping machine, except in respect to the cutters. *a* is a cored box frame that supports the cutting mechanism, consisting of the cutters *i*, spindle *t*, and the reciprocating cutter-bar *e*; *w*, *w*, are wrought-iron rails, upon which the carriage *c* is moved by the pinion at *o* and the large hand-wheel *k*; *d* is the lumber to be cut, which is placed upon the table C, either parallel or at an angle, as may be required, and held by

wedges or screw-clamps. The carriage c is provided on its front edge with a series of stops m, m, m, that come in contact with the hinged dog n and determine both the length and position of the

7394.

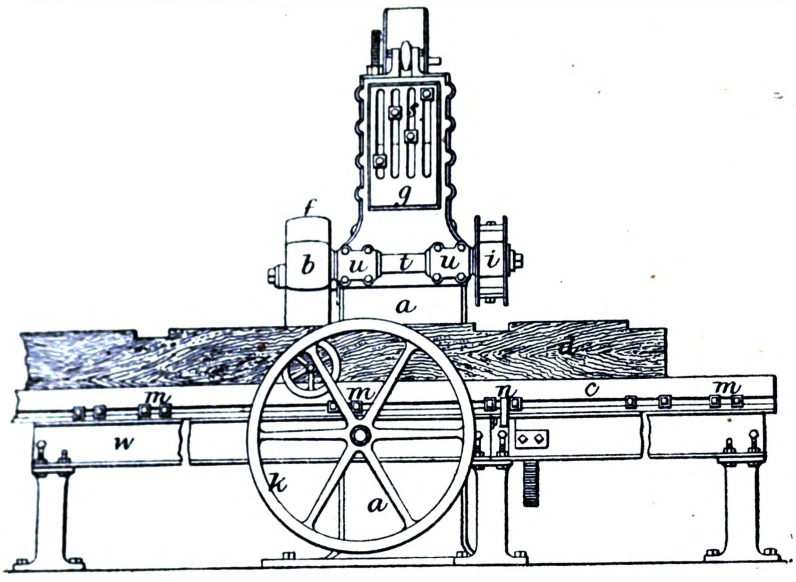

7395.

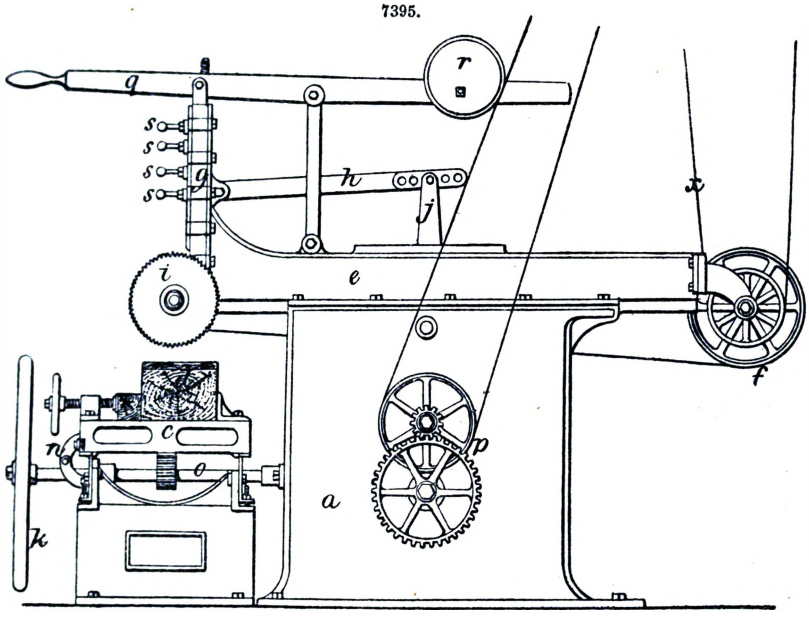

notches or gains that are to be cut on each piece. The bar e has a reciprocating movement of eight strokes a minute given to it by the gearing at p, the lever j, and link h. A crank on the inside of the frame working into a slot in the lever j gives a slow forward and a quick movement back stroke to the bar e; this arrangement also provides for a more uniform rate of movement in the forward stroke than would be attained with a positive crank and link connection.

The traversing movement of the cutters and saws at i is variable by adjustment from 0 to 20 in. The cutter-spindle t is inserted in the bearings u cast upon the sliding saddle g; this saddle is balanced by the weight r, and is moved up or down at will by the operator, who keeps his hand upon the handle at the end. The reciprocating movement of the bar e is slow enough; thus there is time in the intervals at the change of the stroke to raise the saddle g and cutter-spindle t on the back stroke and depress them again, so that the cutters i are brought in contact with the wood on the forward stroke. The depth of the cut is regulated by a system of adjustable stops at s, s, s', s', which are operated at will, and give four independent adjustments to the saddle g or the cutters i. The cutter-spindle t is driven from the shaft at f, also carried on the reciprocating bar e, and is bolted from above to preserve a uniform tension of the driving belt x; z is the belt to drive the reciprocating gearing at p. This machine has been applied to the manufacture of hatch gratings and other purposes in dockyards.

Fig. 7396 is a perspective elevation of an irregular shaping machine with right and left spindles, for moulding forms from patterns. Fig. 7397 is an enlarged view of the cutters and clamping

7396.

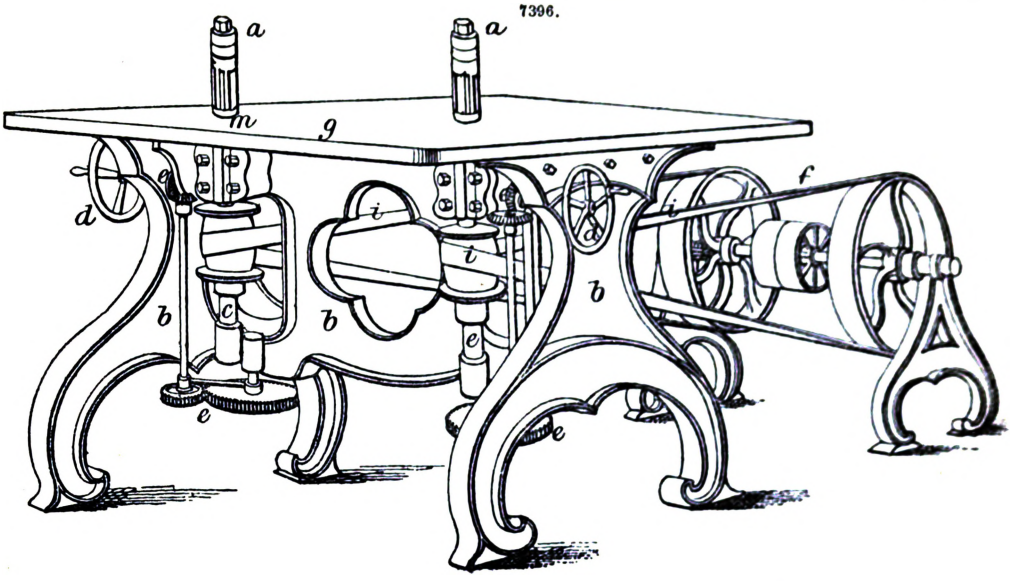

collars. *b b b* is the frame that supports the two spindles *a*, *a*, and the top or table *g*; the spindles *a*, *a*, have a rotary motion in opposite directions given by the angular belts *i* connecting them with the countershaft *f*. The spindles *a*, *a*, are raised or lowered independently by means of the gearing *e* and hand-wheels *d*. The two spindles require an accurate adjustment vertically, so that the cutters will produce the same form in changing from one spindle to the other to suit the grain of the wood. The two spindles are required so that by changing the work from one to the other the cutting may be done with the grain, and thereby guard against accidents. The cutters, which have to be in duplicate pairs right and left hand, are held between the ring-collars, Fig. 7397. These collars *s'*, *s'*, have triangular notches or grooves that embrace the ends of the cutters, which are bevelled off to fit as at *o*. By using a number of these collars *s*, of proper width, various combinations of cutters may be formed so as to produce mouldings of different kinds.

7397.

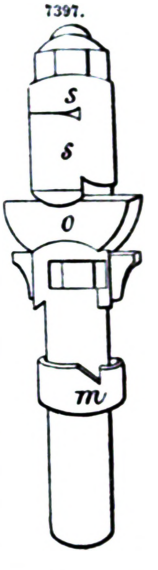

The wood is mounted on and fastened to a model that has the same outline as the piece wanted, except that the edges are square, and rest against the running collars at *m*. By pressing the pattern or form against the spindle and moving it along at the same time, the wood is acted upon and shaped by the cutters *o*.

Fig. 7398 is an irregular shaping machine with automatic action, by Fd. Arbey, of Paris, adapted to the manufacture of gun-stocks, handles for tools, wheel-spokes, shoe-lasts, and so on. A is the framing, bolted together in the usual manner; *a* is a strong sliding carriage moving on planed guides *u*, by means of feeding mechanism on its under side driven by the gearing at *n*; *b* is a swinging frame pivoted at the centre *t*, and provided with bearings for the cutter-spindle *d*; *i*, *i*, *i*, *i*, are supports for the blanks to be shaped, and the two stands *o*, *o*, for the patterns or forms. These stands, *i* and *o*, correspond to the poppet-heads of an ordinary lathe, and have counterparts or head-stocks *s*, at the opposite end of the carriage *a*, which are provided with revolving or driving spindles driven by bevel-wheels *m*.

The blanks being placed between these points are with the patterns *e* all revolved in unison by the gearing at *m*. At *u u*, surrounding the cutter-spindle, are spherical bearings that have the same curvature as the cutters *c*, *c*, *c*, *c*, and rest on the two patterns *e*, *e*. By rotating the patterns *e*, *e*, an oscillating motion is given to the frame *b*, conforming to the changes of the pattern *e* as it progresses with the carriage *a*, and the cutters *c*, *c*, *c*, *c*, cut four duplicates from the blanks that have been placed between the patterns *e*, *e*, on the stocks *i*, *i*, *i*, *i*. The feed-motion of the carriage *a* is arrested by the mechanism seen at *f*. The cutter-spindle *d* receives motion from the pulleys *r*.

Fig. 7399 is another automatic-acting machine for shaping irregular forms arranged to act upon one blank at a time, but capable of producing more intricate forms, especially tool-handles that are long, and too flexible to be acted upon with the ordinary cutters; *a* is the framing, in this case of wood, which is for some reasons preferable; *i* are the cutters that act upon the handle *c*; *e* is the pattern, *o* is a pulley mounted on a short shaft provided at each end with spur centres that give a coincident rotation to the piece *c* and the pattern *e*; the pattern *e* resting on *a*, the convex support at *n* causes a vibrating or rocking motion of the main carriage *m*, on which is mounted the supports for the handle and pattern. This carriage *m* has a longitudinal feed-motion imparted to it by a screw or a chain placed behind it, and not seen in the engraving. The rotation of the piece *c* and the end movement combined causes the saw *i* to cut away a narrow section of wood in a spiral line, the cutters acting so rapidly, and the intervals between cutting being short,

the strain upon the piece c is so inconsiderable that even the thinnest handles can be formed from large or crooked pieces. These machines are extensively used in North America for manufacturing

7398.

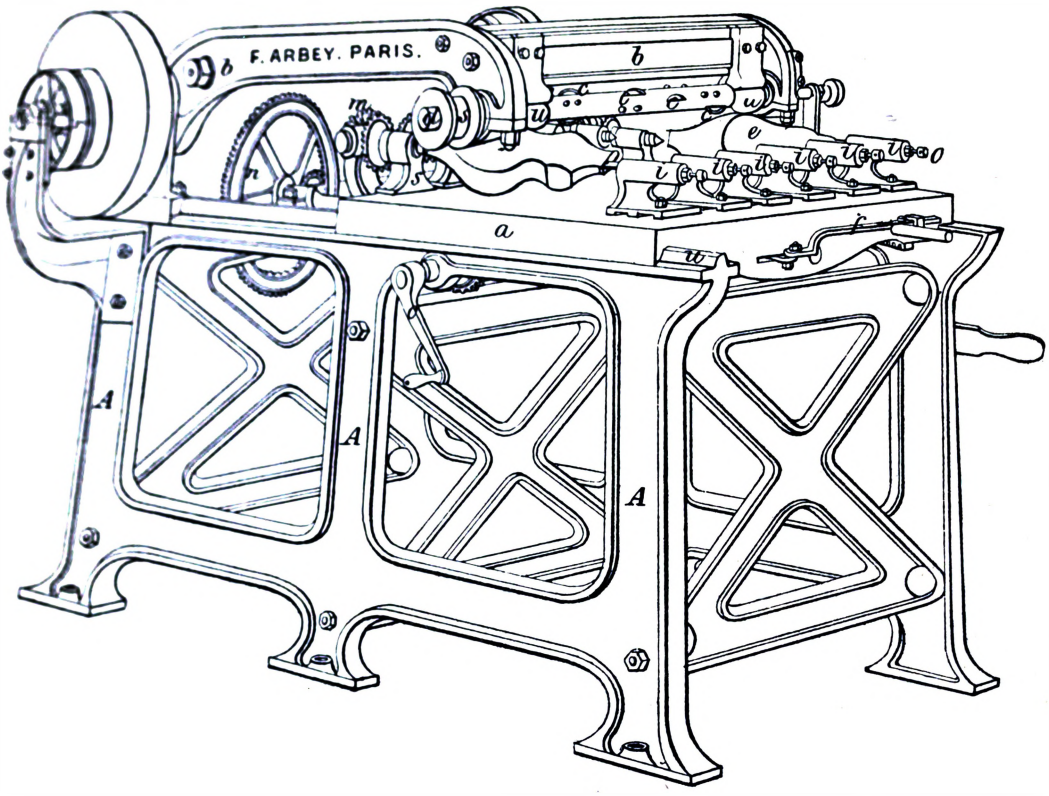

7399.

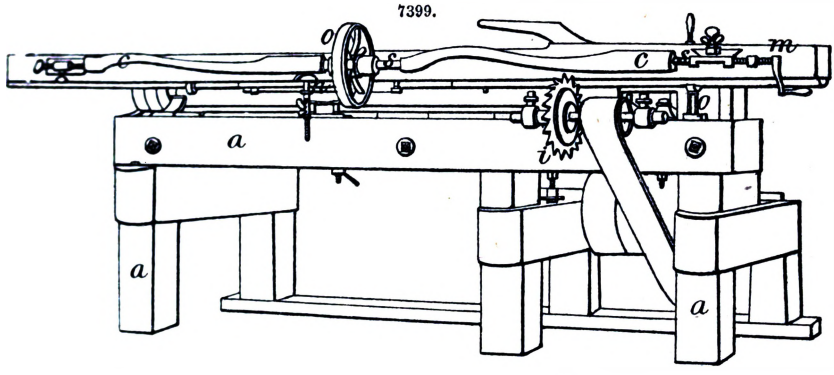

axe, hammer, and pick handles, the product a day being about 300 pieces to each machine, two of which one man can attend.

Dovetailing Machines.—It is difficult to account for the many and persistent experiments that have for sixty years past been made in endeavouring to produce dovetailing machines. There is certainly much less economy of labour to be expected from a successful dovetailing machine than almost any other directed to wood conversion; and the many inventions of machines of this kind have been called out rather from a spirit of ingenuity than from any considered advantage to be gained by them.

In dovetailing furniture drawers, which comprises the greater share of the dovetailing that is to be performed, there is but little need of dovetailing machines. No other operation connected with the manufacture of such drawers can be so rapidly and so perfectly done by hand as the dovetailing.

It is one of those peculiar operations where but little power and but a limited amount of edge can be applied, and the adjustment or changes are so numerous and rapid that judgment is continually necessary in directing the tools, while the strength of the operator is not only sufficient for the work, but is equal to the amount of power that can be applied by machines.

Sir Samuel Bentham eighty years ago invented the conical cutter dovetailing machine, and

describes it in 1793. Nearly all machines since invented have been modifications of his principle, Armstrong s forming the most notable exception, and the result, taking the history of the whole art since Bentham's time, may be summed up in the statement that while dovetailing machines have effected a considerable saving of labour in certain kinds of work, such as making plain rectangular boxes, packing cases, and other work where the joins and holes are pervious; yet

7400.

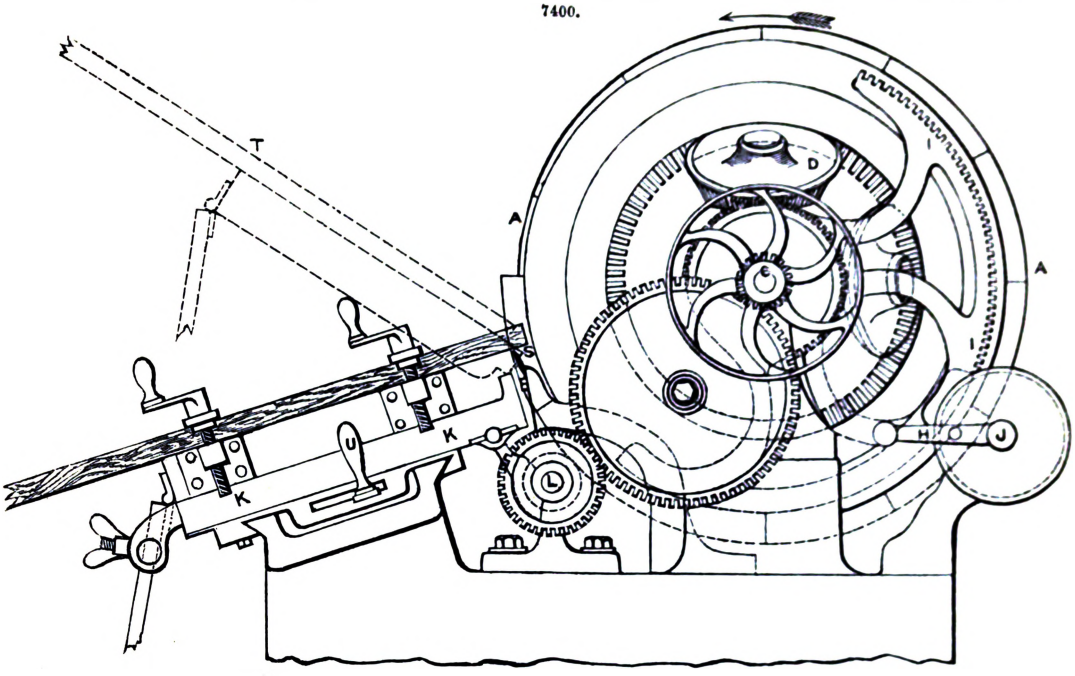

7401.

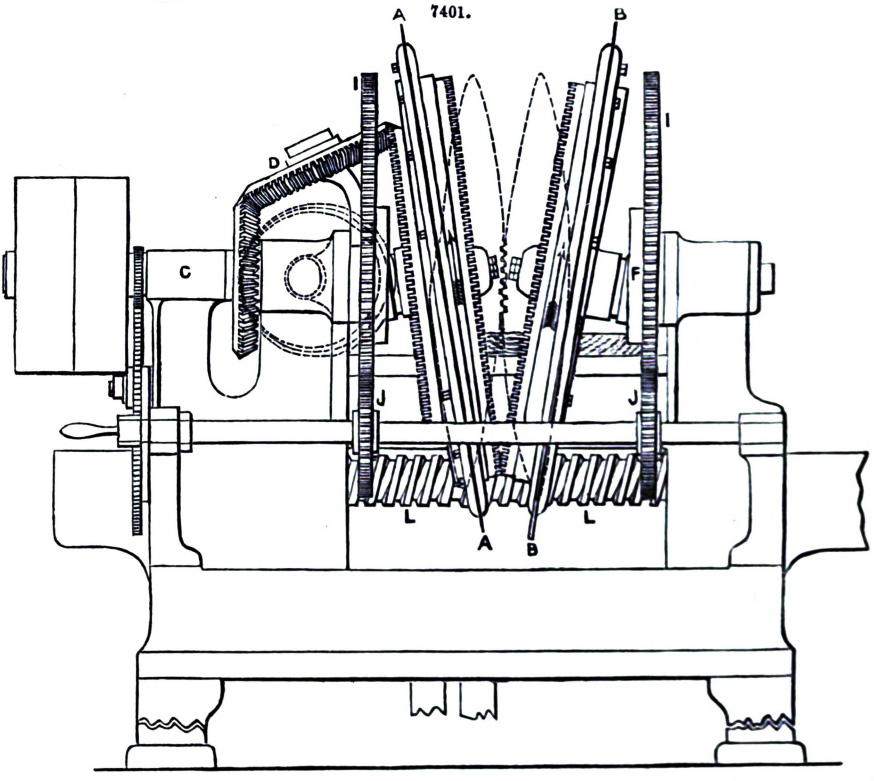

drawer making and the finest classes of dovetailing are done as cheaply and as well by hand as by machines. This statement is not so much based upon the assumed conditions of the work, nor

the nature of the machines, as upon the fact that but few wood manufacturers use dovetail machines except for rough work that admits of a great range of duplication.

7402.

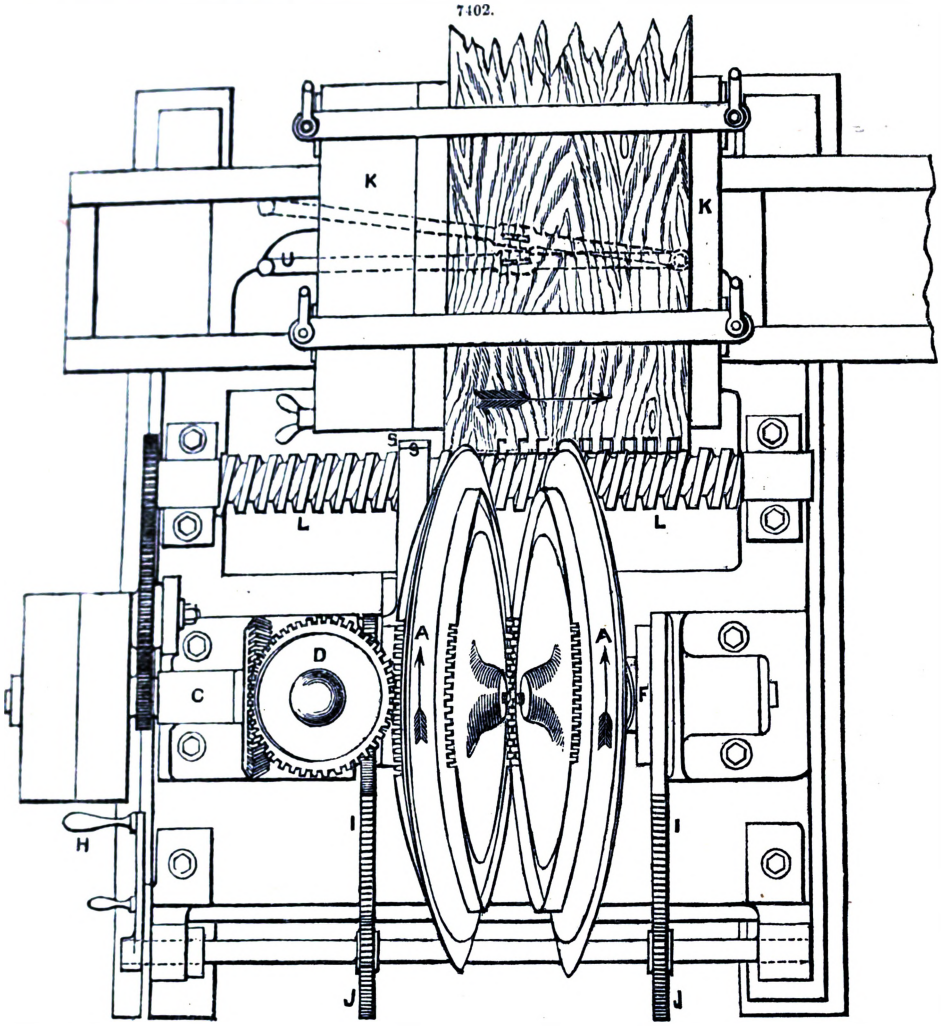

Considered as a machine of novel construction, and apart from the importance of the work performed by it, the dovetailing machine of S. T. Armstrong, New York, is one of the most remarkable ever introduced for working wood. For the manufacture of rectangular boxes and for work where open dovetailing is allowable, this machine prepares the lumber in a rapid manner, because of the number of the cutting edges, as these obviate the dulling and wear which invariably occurs with machines for similar purposes having only a limited edge.

Figs. 7400 to 7404 are of Armstrong's machine; Fig. 7400 is a side elevation, Fig. 7401 a back elevation, and Fig. 7402 a plan.

The two compound circular saws A and B, each about 2 ft. diameter, are placed inclined to one another at an angle of 18°, Figs. 7401, 7402, corresponding to the inclination of the two sides of the dovetail pins, and they are geared together by two bevelled-toothed rings upon their inner faces. The saws run loosely upon two short fixed axes, and one of them A is driven by the main driving shaft C through the intermediate bevel-wheel D, which gears into a corresponding toothed ring on the outer face of that saw; the second saw B is driven by the first one A.

The two inclined axes of the saws, one of which is shown separately at E in the section, Fig. 7404, are fixed upon the faces of two small circular discs F; these discs are parallel to one another, and each has a spindle G on the outer face. The two spindles are both in the line of the driving shaft C, and turn in two sockets in the machine frame. The discs F, F, have two toothed sectors I, I, fixed upon them, which gear with two pinions on the shaft J J, so that on turning this shaft by the handle H the inclined axes of the two saws are turned round simultaneously through a quarter revolution; the direction of their inclination is thus changed from vertical to horizontal or the reverse, and the point of contact of the two saws is rolled round through a quarter of a revolution. The connection with the driving shaft C for driving the saws is preserved during this change of position by the intermediate bevel-wheel D continuing in gear, whilst rolling round into the position shown by the dotted lines in Figs. 7400, 7401, the wheel D being carried upon the arm of one of the toothed sectors I. The object of this movement is to change the action of the saws

from cutting the pins to cutting the holes of the dovetails. The wood to be cut is clamped down upon the table K, Figs. 7400, 7402, which is placed radially to the saws, so that the cuts are at right

7403.

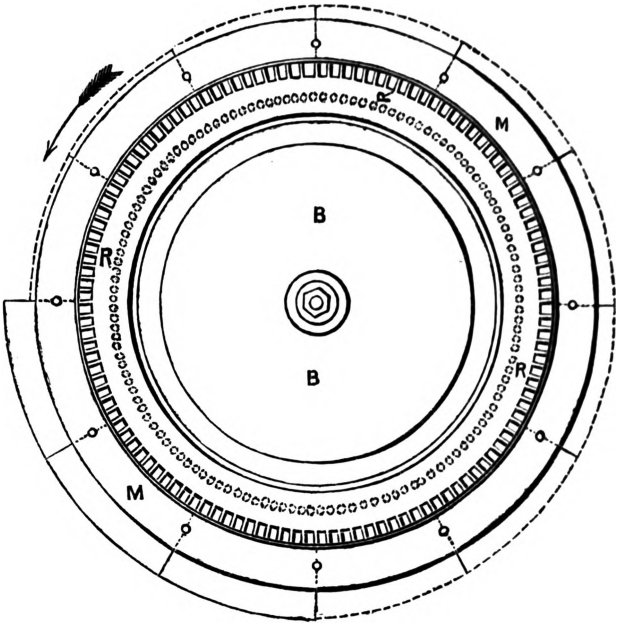

7404.

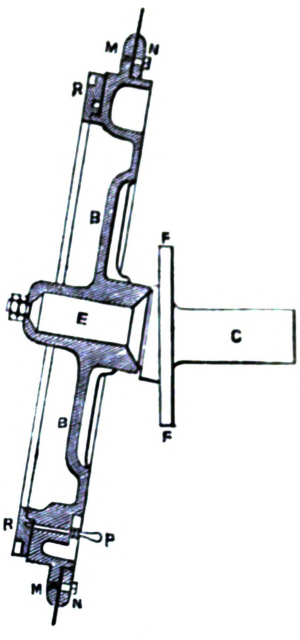

angles to the face of the wood, and when the dovetail holes are to be cut, the two saws are required to be at their full inclination to each other in plan, but parallel on the edge of the wood, as in Figs. 7407, 7408, so that one saw cuts the right-hand side and the other the left-hand side of each dovetail hole; and the two oblique axes of the saws are made for this purpose at the inclination to give the angle of 18° between the two saw faces. But when a rotation of a quarter of a circle is given to these two axes by means of the toothed sectors I, I, the direction of their inclinations is then brought at right angles to the face of the wood to be cut, as in Figs. 7405, 7406, and the edges of the saws, where in contact with the wood, are parallel to one another in plan but inclined in elevation, so as to cut the dovetail pins with parallel sides on the face of the wood, Fig. 7405, but inclined on the edge of the wood, Fig. 7406. By this means the pins and holes of the dovetails are formed at exactly the same inclination, by the simple expedient of cutting them at two different points of the circumference of the saws, at right angles to each other.

Each saw cuts one half of a pin or hole in a single revolution. The saw-blade is made plain for the first three-quarters of its circumference, like an ordinary circular saw, but with a spiral outline gradually increasing in diameter, as shown in Fig. 7403, so as to increase the depth of cut continuously until the bottom of the dovetail is reached. The last quarter circumference of the saw-blade is made truly circular, but has the cutting edge bent over at right angles, so as to cut at the side, for cross cutting the bottom of the dovetail; and the lateral projection of the flanged blade gradually increases until it is equal to half the width of the bottom of the hole. For cutting the pins of the dovetail, the two saws being then parallel in plan, Fig. 7405, the flanged saw-blades have the edge bent over inwards exactly at right angles, for cross cutting the bottom of the dovetail; but for cutting the holes, the flanged blades are bent over outwards to an angle of 81° as in Fig. 7407, the two saws being then inclined at 18° towards each other in plan.

In order to traverse the wood for obtaining a succession of cuts, the table K on which it is clamped is traversed across in front of the saws with a continuous feed-motion by means of the bed-screw L, driven by spur-gear from the main shaft C; and the blade of each saw, instead of being at right angles to the axis upon which the saw revolves, is set inclined like a screw-thread, with 1-in. pitch, that being the intended pitch of the dovetails. The bed-screw L also traverses the wood 1 in. forwards in each revolution of the saws; and the saws and the wood are consequently made to traverse exactly together, each saw following up its own cut correctly, until the cut is completed at the end of one revolution of the saw; and the saw then commences the next cut at the pitch of 1 in. The second saw B does not commence cutting until the first saw A has advanced a certain distance in the work, as in Figs. 7405 to 7412; and it continues cutting throughout at the same distance behind the first saw, but completes all the pins or holes at the end.

The saw-blades are made in short segments, each 6 in. long, Fig. 7403, and are fixed in their places by fitting into a turned recess M M in the circumference of the cast-iron boss B; they are held in their places by a series of segment plates N, N, at the back, tightened up by two bolts each. The saw segments are readily released and changed, when it is required to set the machine for a different size of dovetail, or to change from cutting the pins to cutting the holes; and five different sets of blades are kept for this purpose, to give the extent of range in dimensions of dovetails that is required with each machine; the several sets vary proportionately both in the plain and the flanged portions of the blade.

In changing the machine from cutting the holes to cutting the pins of the dovetails, the two saw-blades require a slight adjustment endways relatively to each other, in order to take up the

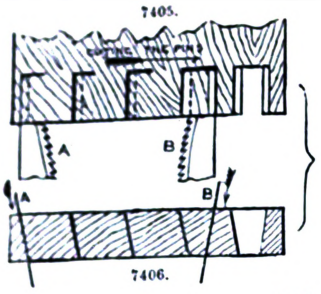

7406.

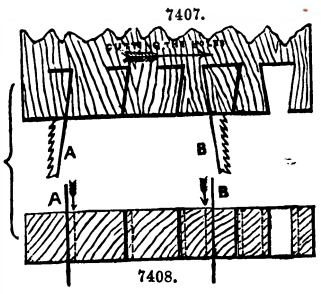

7408.

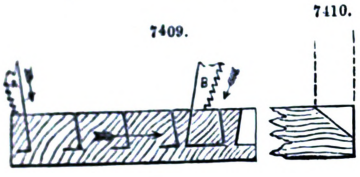

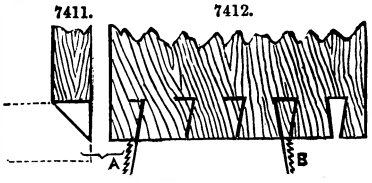

slack that would be caused in the fit of the dovetails by the thickness of the saw-cuts themselves, and to make the pins fit true and tight in the holes without any shake. This adjustment is obtained by rotating the second saw B a certain distance round upon its axis E, Fig. 7404, the toothed driving ring R R being for this purpose made loose upon the boss B of the saw, and locked to it by the pin P for driving the saw. As the circumference of the saw-blade is itself in the form of a screw-thread of 1-in. pitch, the effect of turning the saw round upon its axis E is to shift endways the point of commencing the cut; and by this means therefore the cut of the second saw is made to follow that of the first at the required distance. The ring R R is marked with graduations corresponding to the several adjustments required for changing the machine from one size of dovetail to another, or from cutting the pins to cutting the holes of the dovetails; and the adjustment includes the required allowance for clearance, to make the pins and holes fit together with any degree of tightness that is desired, without requiring any dressing by hand.

The saw segments are all made exact duplicates of one another in the portions fitting on the boss of the saws; and consequently in the wear of the saws, as the segments become gradually reduced in diameter by the sharpening, they are simply shifted each to the adjoining place in the circumference of the saws, a new segment being required only for replacing the last or largest flanged segment. The change also from the flanged to the plain segments is made by filing down plain teeth in the first flanged segment when worn out.

The table K carrying the wood is made with a hinge movement, so that it can be inclined at an angle of 45° to its usual radial position, as shown by the dotted lines at T.

The table K is mounted upon two slides at right angles to each other, like the slide-rest of a lathe; the lower slide receives the traverse feed-motion from the bed-screw *h*, and the upper slide is moved inwards towards the saws by the hand-lever U, through a distance equal to the depth of the dovetails. The upper slide also carries a half-nut, which gears with the traverse screw L; so that when the wood is advanced up to the saws by the hand-lever U, the nut is at the same time thrown into gear with the screw L, causing the traverse feed-motion of the wood to commence.

A scriber S is used to mark off on the under side of the wood the bottom line of the dovetail pins and holes, in advance of the saws, to prevent the edge of the wood from being broken on the under side. This scriber serves also as a gauge for setting the edge of the wood to be cut, which is first clamped down upon the table K with its edge level with the scriber S, and the wood being then moved inwards towards the saws by the hand-lever U, this gives the correct depth of cut for the dovetails.

The working speed of the machine is 150 revolutions a minute, one pin or hole of the dovetail being cut at each revolution.

Evart's Dovetailing Machine.—The machine, Fig. 7413, is one of the most complete of those operating with conical cutters capable of dovetailing at various angles, and can be used to advantage in ship joinery or elsewhere when drawers or boxes are made of other than a rectangular form.

A is the spindle-frame in which is mounted six or more cutting spindles all driven by the belt B. This frame is supported on the cylindrical slide-bar C, that allows the cutters and spindles to be raised or lowered by means of the hand-lever D and the link I.

The carriage A moves horizontally on slides, and is guided in this direction by the bar K. When this bar K is set in a line coincident with the sliding support C, the spindle-frame and cutters rise and fall vertically; but when the guide-bar K is set at an angle it gives a compound motion to the spindle-frame A in rising and falling, and the cutters pass through the wood, which is placed on the platform at the rear of the machine, at an angle to correspond with that of the guide K. The various angles and movements being graduated by figured scales, render the adjustment simple and sure.

The table on which the wood is placed and the clumps operated by the wheel F have also various adjustments that give a large range of functions to the machine.

Automatic Turning Machines.—This class of machinery has received a great deal of attention in the United States of America, where wood turning is extensively carried on.

Hand turning is not only expensive as a wood-converting process, but is also very imperfect so far as the attainment of accurate or uniform sizes and configuration is concerned, and there has been no want of incentive for the development of machine turning.

It was for a long time regarded as impracticable to produce smooth work by machine processes; the configuration and accuracy were easily attained, as well as the expected gain in the speed of the operations, but the smooth surface that is left by hand chisels seemed to be unattainable by the machines. Ingenuity and perseverance, however, finally triumphed over this obstacle, and machine turning is now performed quite as smooth as hand turning. The machine shown at Fig. 7414 is a modification of one of the American automatic lathes. There are others that operate upon analogous principles, but the one selected will convey a correct idea of their operation.

7413.

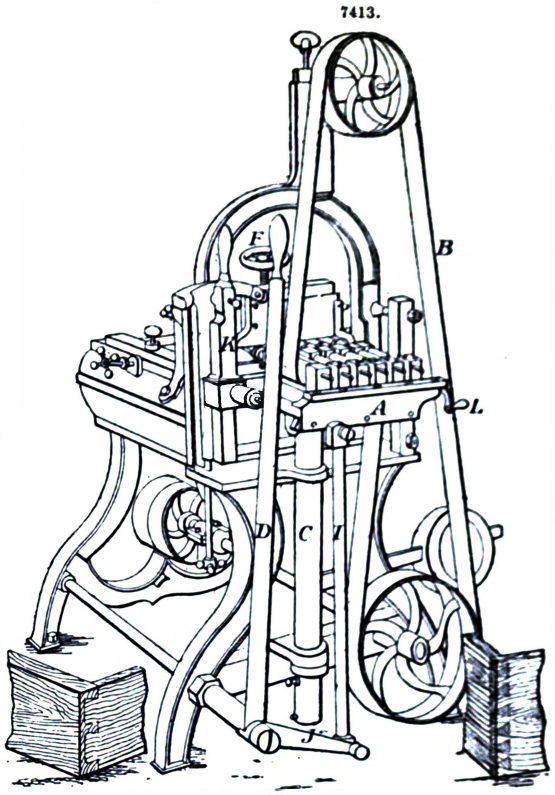

The lathe in all of its parts corresponds to an engine lathe for metal turning, having a slide-rest and screw-feed, with planed guides and a sliding tail-stock. The wood is placed between the centres, and is first acted upon by cutters, that reduces it to a cylindrical form, and to fit a die or ring-rest attached to the sliding carriage; behind this rest there follow two or more hinged tools that are raised and lowered by means of the pattern *a*, on which they slide giving form to the piece, but leaving it rough. As the carriage moves along, the frame *c* moves down at the same time, bringing the cutter *e* in contact with the piece. This cutter *e* is shaped on its face so that the edge follows the profile of the piece and takes off a thin shaving in the same manner as is done with a hand chisel, leaving the surface smooth. The frame *c* rises and falls automatically; in fact, all the movements except placing the wood and starting the wood, are automatic. The cutters are shaped by automatic machinery in their manufacture, and their expense is so reduced as to form no obstacle to their use.

7414.

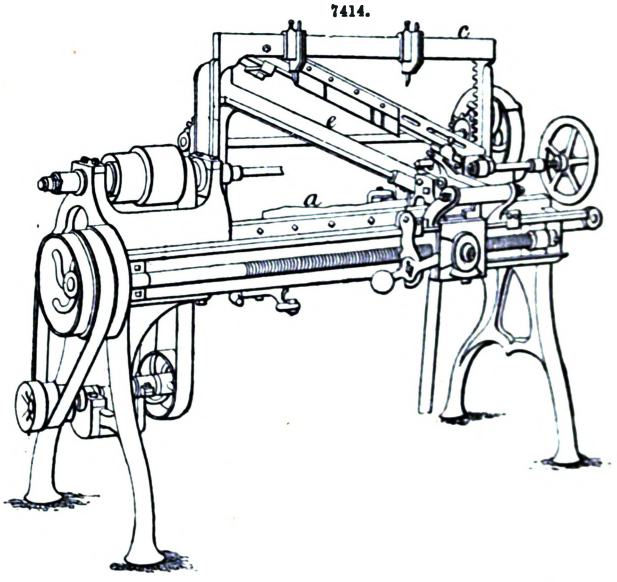

See MACHINE TOOLS.

WORM. FR., *Filet d'une vis;* GER., *Gewinde;* ITAL., *Vite perpetua;* SPAN., *Tornillo sin fin.*

The thread of a screw is called the worm. The name is also given to a short revolving screw, the threads of which drive a wheel by gearing into its teeth or cogs; *a worm-wheel.*

WRENCH. FR., *Tourne à gauche;* GER., *Windeisen;* ITAL., *Chiave da dadi;* SPAN., *Destornillador.*

See HAND-TOOLS.

ZERO. FR., *Zéro;* GER., *Null;* ITAL., *Zero;* SPAN., *Zero.*

Zero is the point from which the graduation of a scale, as of a thermometer, commences. Zero

in the thermometers of Celcius and Réaumur is at the point at which water congeals. The zero of Fahrenheit's is fixed at the point at which the mercury stands when immersed in a mixture of snow and common salt. In Wedgewood's pyrometer the zero corresponds with 1077° on Fahrenheit's scale.

ZIGZAG. Fr., *Zigzag*; Ger., *Zickzack*.

See Fortification.

ZINC. Fr., *Zinc*; Ger., *Zink*; Ital., *Zinco*; Span., *Zinc*.

The name zinc is derived from the German zinn, tin, with which metal zinc was for a long time confounded. Commercially, it is known as spelter. Zinc is a bluish-white metal, very lustrous externally, and when broken exhibits a foliaceous crystalline texture. At ordinary temperatures it is somewhat brittle, but when heated above 212°, it becomes perfectly ductile and malleable, and may then be beaten out into thin sheets, or drawn out into wire. At a temperature of 400° it becomes so exceedingly brittle that it may be easily pulverized. At 773° it fuses, and above that temperature it is volatilized, and may be distilled. If the vapour be exposed to the air, it burns very brilliantly with a bluish-yellow flame, and is converted into oxide of zinc, which is deposited in copious white flakes, the flowers of zinc, or *lana philosophica* of the older chemists. In this state of oxide, it is largely prepared as a pigment, and is known as zinc white. It is of a purer colour than white-lead, and, unlike the latter, it does not tarnish and blacken with sulphuretted hydrogen; it is also much healthier for use by operative painters, but unfortunately in this respect, its use is limited by a want of body. The discovery, towards the beginning of the present century, that zinc could be rendered malleable and ductile has greatly extended its uses, and placed it in a position of considerable importance with respect to the other metals. One property possessed by zinc is that of becoming coated, when exposed to a moist atmosphere, with a thin compact film of oxide, which effectually protects the metal beneath from further oxidation. Hence the value of zinc as a material for roofing, and also for protecting the surface of iron from oxidation.

The symbol of zinc is Zn; its atomic weight, 32·75; molecular weight, 32·75; specific gravity, 6·8.

Zinc is found in nature only in a state of combination; its principal ores are the sulphuret known as blende, and the silicate and carbonate which are confounded under the name of calamine. Blende, called in Cornwall black-jack, contains when pure about 67 per cent. of zinc; it is, however, seldom found in a pure state. The usual composition of English blende is zinc 61, iron 4, and sulphur 35. It occurs in all the older geological formations, and is frequently found associated with the ores of copper and tin, but chiefly with the ores of lead. In this country the localities which produce blende are Wales, the Isle of Man, Derbyshire, and Cornwall. Sweden is very rich in this mineral, and in several localities on the Continent it is found in considerable quantities. Blende is of a brownish colour; but in this country, in consequence of the presence of sulphuret of iron, it has a dark appearance; hence its name of black-jack. It crystallizes in the form of the rhomboidal dodecahedron, and the crystals possess considerable brilliancy. Calamine, when pure, contains about 52 per cent. of zinc; but its composition varies much. It is usually of a dull yellow or of a reddish-brown colour; its primitive crystalline form is the rhombohedron, but, like blende, it occurs more frequently massive than in crystals. Formerly large quantities of this mineral were raised in Somersetshire and exported as ballast, its value being then unknown; Cumberland is the only locality in this country that now produces calamine in considerable quantities. Belgium, Silesia and Carinthia, and the north coast of Spain, are rich in this ore.

Zinc is extracted from its ores by calcining them with carbon, after having roasted them and reduced them to a fine powder in clay pipes arranged in furnaces constructed for that purpose. The blende is converted into oxide by oxidation, and the carbonate also gives oxide by losing carbonic anhydride. The oxide when calcined with carbon gives metallic zinc. The apparatus employed in the reduction of zinc may be constructed to allow the metal to flow out at the bottom as it fuses; this method is known as distillation *per descensum*, and is the one usually employed in England. With another arrangement of the apparatus, the zinc is reduced to vapour and then distilled; this latter method is known as distillation *per ascensum*.

The zinc of commerce is never perfectly pure; it always contains a little carbon, arsenic, iron, manganese, and more rarely, tin, copper, lead, cadmium, and sulphur. It cannot be freed from these metals by distillation even. The best way to obtain it pure is to reduce pure oxide of zinc by equally pure carbon, prepared by calcining loaf-sugar. Zinc decomposes vapour of water at 212°; when cold, it substitutes itself for the hydrogen of the acids; the preparation of hydrogen is founded upon this property. Gold, silver, platinum, copper, bismuth, antimony, tin, cadmium, mercury, lead, and the other metals less oxidizable than itself, are precipitated by zinc from their saline solutions. When hot, the hydrates of potassium and sodium, and even the solution of ammonia, dissolve zinc with a liberation of hydrogen. With the fixed alkalies, there is formed in this case alkaline zincates.

$$\underset{\text{Potassa.}}{2\left(\begin{matrix}K\\H\end{matrix}\right\}\Theta\Big)} + \underset{\text{Zinc.}}{Zn} = \underset{\text{Zincate of potassa.}}{\left.\begin{matrix}Zn\\K_2\end{matrix}\right\}\Theta_2} + \underset{\text{Hydrogen.}}{\left.\begin{matrix}H\\H\end{matrix}\right\}}$$

As a diatomic metal, zinc combines with two atoms of chlorine, bromine, and iodine, giving a chloride $Zn\left\{\begin{matrix}Cl\\Cl\end{matrix}\right.$, a bromide $Zn\left\{\begin{matrix}Br\\Br\end{matrix}\right.$, and an iodide $Zn\left\{\begin{matrix}I\\I\end{matrix}\right.$. It forms besides with oxygen a protoxide $Zn\,\Theta$, and a binoxide $Zn\,\Theta_2$. To the protoxide corresponds a hydrate $\left.\begin{matrix}Zn\\H_2\end{matrix}\right\}\Theta_2$, which furnishes a series of salts by the substitution of the radical acids for the typical hydrogen it contains. With sulphur, zinc forms but one combination, namely, a monosulphide Zn S, which, under the name of blende, is the most abundant of its ores. The combinations of zinc with the monatomic metalloids have now to be considered.

Chloride of Zinc, $Zn\begin{Bmatrix}Cl\\Cl\end{Bmatrix}$.—Chloride of zinc may be obtained by heating zinc in a current of chlorine. The metal burns in this case, and is converted into chloride. But this chloride may be obtained much more rapidly and cheaply by dissolving zinc in hydrochloric acid.

$$\underset{\text{Zinc.}}{Zn} + \underset{\text{Hydrochloric acid.}}{2\left(\begin{matrix}H\\Cl\end{matrix}\right)} = \underset{\text{Chloride of zinc.}}{Zn\begin{Bmatrix}Cl\\Cl\end{Bmatrix}} + \underset{\text{Hydrogen.}}{\begin{matrix}H\\H\end{matrix}\Big\}}$$

When the metal is dissolved, the solution is filtered to remove the impurities that do not dissolve, and afterwards evaporated. As soon as evaporation is complete, the mass is fused and run upon a clean stone, and immediately after solidification pounded and placed in a well-stopped bottle. If it were allowed to cool while exposed to the air, it would become moist on the surface. To the older chemists this substance was known as butter of zinc. If instead of completely evaporating the solution the operation be stopped when the liquor has become very concentrated, the chloride will be deposited by the cooling of the solution in hydrated crystals.

Chloride of zinc is of a greyish colour; it fuses at about 482°, and at 752° it begins to vapourize. It is an extremely diliquescent substance. It evolves much heat on dissolving in water, and its avidity for this liquid is such that it destroys the tissues of the body by taking up the water which they contain. For this reason it is often employed in medicine as a caustic. Alcohol also dissolves chloride of zinc. If such a solution be heated the alcohol will be dehydrated, and according to the proportion of chloride employed, there will be produced ethylene C_2H_4, or ether $C_4H_{10}O$.

$$\underset{\text{Alcohol.}}{C_2H_6O} = \underset{\text{Water.}}{H_2O} + \underset{\text{Ethylene.}}{C_2H_4}$$

$$\underset{\text{Alcohol.}}{2\,C_2H_6O} = \underset{\text{Water.}}{H_2O} + \underset{\text{Ether.}}{C_4H_{10}O}$$

Bromide of Zinc, $Zn\begin{Bmatrix}Br\\Br\end{Bmatrix}$.—The bromide is obtained in the same way as the chloride, and it possesses similar properties.

Iodide of Zinc, $Zn\begin{Bmatrix}I\\I\end{Bmatrix}$.—This substance is prepared by pounding iodine and zinc dust in water; it is of a white colour and is soluble in water. Iodide of zinc is of very little importance; according to Bouchardat it might be employed in medicine in preference to the iodide of lead.

The combinations of zinc with the diatomic metalloids serve some important uses, and offer several points of interest.

Protoxide of Zinc, ZnO.—For industrial purposes, some of which we have already alluded to, the protoxide of zinc is prepared directly by the combustion of the metal. This is effected by heating the zinc till it gives off vapours, and then setting it on fire; the smoke caused by the combustion is carried by a current of air through a series of chambers where the oxide is deposited. The oxide of zinc is also prepared by heating the hydrate of this metal, by calcining the nitrate or the carbonate, and by heating the bisulphite obtained by the action of sulphurous anhydride upon blende pulverized and in suspension in water. At ordinary temperatures this oxide is white; it becomes yellow when heated, but resumes its original colour on cooling. When obtained by the calcination of the metal, it is light and has a woolly appearance; if prepared from the bisulphite, it has a spongy appearance, but is equally light; but when obtained by calcining the nitrate, it is pulverulent and heavy.

The oxide of zinc is absolutely fixed; water dissolves only $\frac{1}{100000}$ of it, but this is sufficient to be sensible to litmus paper. It is a basic anhydride, making the double decomposition with the acids, and gives well-defined salts, isomorphous with those of magnesium.

Hydrate of Zinc, $\left.\begin{matrix}Zn\\H_2\end{matrix}\right\}O_2$.—If an alkaline solution be poured into the solution of a salt of zinc, a precipitate is formed which, when collected upon a filter and well washed, constitutes the hydrate of zinc. This hydrate loses a molecule of water under the influence of heat, and leaves a residue of anhydrous oxide of zinc.

Hydrate of zinc produces the double decomposition with the acids, and gives salts which are due to the substitution of the radicals of these salts for its typical hydrogen. It must be considered as a somewhat powerful base; yet in the presence of the very powerful bases, it may also exchange its hydrogen for a metal and give zincates; in such a case it plays the part of a weak acid.

1. $$\underset{\text{Hydrate of zinc.}}{\left.\begin{matrix}Zn\\H_2\end{matrix}\right\}O_2} + \underset{\text{Nitric acid.}}{2\left(\begin{matrix}NO_2\\H\end{matrix}\right\}O\Big)} = \underset{\text{Nitrate of zinc.}}{\left.\begin{matrix}Zn\\(NO_2)^2\end{matrix}\right\}O_2} + \underset{\text{Water.}}{2\left(\begin{matrix}H\\H\end{matrix}\right\}O\Big)}$$

2. $$\underset{\text{Hydrate of zinc.}}{\left.\begin{matrix}Zn\\H_2\end{matrix}\right\}O_2} + \underset{\text{Potassic hydrate.}}{2\left(\begin{matrix}K\\H\end{matrix}\right\}O\Big)} = \underset{\text{Water.}}{2\left(\begin{matrix}H\\H\end{matrix}\right\}O\Big)} + \underset{\text{Zincate of potassa.}}{\left.\begin{matrix}Zn\\K_2\end{matrix}\right\}O_2}$$

Sulphate of Zinc, $\left.\begin{matrix}SO_2\\Zn\end{matrix}\right\}O_2$.—In the laboratory, sulphate of zinc is prepared by dissolving metallic zinc in dilute sulphuric acid.

$$\underset{\text{Zinc.}}{Zn} + \underset{\text{Sulphuric acid.}}{\left.\begin{matrix}SO_2\\H_2\end{matrix}\right\}O_2} = \underset{\text{Sulphate of zinc.}}{\left.\begin{matrix}SO_2\\Zn\end{matrix}\right\}O_2} + \underset{\text{Hydrogen.}}{\begin{matrix}H\\H\end{matrix}\Big\}}$$

The residues from the preparation of hydrogen are utilized for this purpose; these liquors need only to be filtered and crystallized.

For industrial purposes, it is prepared by roasting blende or natural sulphide of zinc; oxygen thus enters into combination with this substance and converts it into a sulphate. The mass is then treated by water, which dissolves the sulphate of zinc; it is afterwards decanted and crystallized.

$$\underset{\text{Sulphide of zinc.}}{Zn\,S} + \underset{\text{Oxygen.}}{2\left(\begin{matrix}O\\O\end{matrix}\right)} = \underset{\text{Sulphate of zinc.}}{\begin{matrix}SO_2\\Zn\end{matrix}\Big\}O_2}$$

To render it more easy of transport, this salt is fused in its water of crystallization and run into cakes.

Sulphate of zinc dissolves in two or three times its weight of water at ordinary temperatures. At these temperatures it crystallizes with 7 molecules of water of crystallization; it may also crystallize with different quantities of water when the conditions under which crystallization takes place are varied. In every case the crystals of sulphate of zinc are isomorphous with those of the sulphate of magnesium that contain the same quantity of water.

This sulphate combines with the alkaline sulphates, and gives double salts which crystallize with 6 molecules of water. The double salt of zinc and potassium corresponds to the formula

$$\begin{matrix}SO_2\\Zn\end{matrix}\Big\}O_2, \qquad \begin{matrix}SO_2\\K_2\end{matrix}\Big\}O_2 + 6\text{ aq.}$$

When heated to a high temperature, sulphate of zinc is decomposed, and leaves a residue of oxide of zinc.

Binoxide of Zinc, ZnO_2.—The binoxide is obtained by acting on the protoxide with oxygenated water.

$$\underset{\text{Protoxide of zinc.}}{ZnO} + \underset{\text{Oxygenated water.}}{H_2O_2} = \underset{\text{Water.}}{H_2O} + \underset{\text{Binoxide of zinc.}}{ZnO_2}$$

It is a very unstable substance.

Sulphide of Zinc, Zn S.—Sulphide of zinc is found native, and, under the name of blende, constitutes, as we have seen, the principal ore zinc. It may be obtained artificially by precipitating a salt of zinc by means of the soluble sulphides.

$$\underset{\text{Sulphate of zinc.}}{\begin{matrix}SO_2\\Zn\end{matrix}\Big\}O_2} + \underset{\text{Sulphide of potassium.}}{\begin{matrix}K\\K\end{matrix}\Big\}S} = \underset{\text{Sulphate of potassium.}}{\begin{matrix}SO_2\\K_2\end{matrix}\Big\}O_2} + \underset{\text{Sulphide of zinc.}}{Zn\,S}$$

When roasted, the sulphide of zinc is converted, according to the temperature, either into a sulphate or into sulphurous anhydride and oxide.

1. $$\underset{\text{Sulphide of zinc.}}{Zn\,S} + \underset{\text{Oxygen.}}{2\left(\begin{matrix}O\\O\end{matrix}\right)} = \underset{\text{Sulphate of zinc.}}{\begin{matrix}SO_2\\Zn\end{matrix}\Big\}O_2}$$

2. $$\underset{\text{Sulphide of zinc.}}{2\,Zn\,S} + \underset{\text{Oxygen.}}{3\left(\begin{matrix}O\\O\end{matrix}\right)} = \underset{\text{Sulphurous anhydride.}}{2\,SO_2} + \underset{\text{Oxide of zinc.}}{2\,ZnO}$$

Sulphide of zinc dissolves in the acids with a liberation of hydrosulphuric acid.

$$\underset{\text{Sulphide of zinc.}}{Zn\,S} + \underset{\text{Hydrochloric acid.}}{2\left(\begin{matrix}H\\Cl\end{matrix}\right)} = \underset{\text{Chloride of zinc.}}{Zn\begin{matrix}Cl\\Cl\end{matrix}} + \underset{\text{Sulphuretted hydrogen.}}{\begin{matrix}H\\H\end{matrix}\Big\}S}$$

Carbonate of Zinc.—The carbonate of zinc is also found in nature, and is known as calamine. It is one of the ores of zinc; but, except in the metallurgy of zinc, it has not been applied to any purpose.

Reactions of the Salts of Zinc.—The characteristics of the salts of zinc are the following;—

1. Hydrosulphuric acid does not precipitate them, unless the salt is derived from a weak acid, such as acetic acid, in which case a white precipitate of sulphide of zinc is formed.
2. Both potassa and ammonia throw down from their solutions a white precipitate of hydrate of zinc, soluble in an excess of the reagent.
3. Sulphide of ammonium produces in them a white precipitate of sulphide of zinc, soluble in dilute hydrochloric acid.
4. The carbonates of potassium and sodium give with the salts of zinc a white precipitate of carbonate of zinc insoluble in an excess of the reagent.
5. The carbonate of ammonia acts in the same manner; but in this case the precipitate dissolves in an excess of the reagent.

Professor Miller sums up the characters of the salts of zinc as follow;—The salts of zinc are colourless; their solutions have an astringent metallic taste, and act rapidly as emetics. They are distinguished by giving no precipitate in acid solutions with sulphuretted hydrogen, but they yield a white hydrated sulphide of zinc with sulphide of ammonium.

INDEX.

ABACUS, 1.
Abattis, 4.
Abattoir, 5.
Absorption, 421.
Abstracting dimensions, 5.
Abutment, 5, 695.
Abutting joint, 5.
Accelerated motion, 5.
Acceleration, 5.
Accumulator, Armstrong's, 1963.
Achromatic lens, 8.
Acre, 8.
Acreage, railway, calculation of, 2710.
Adams' bracket fastening for permanent way, 2592.
—— brake, 595.
—— girder rails, 2594.
—— suspended girder rails, 2595.
Addis' wrought-iron sleepers, 2589.
Addressing machine, 8.
Adhesion, 8, 1341.
—— of locomotives, 1341.
Adit, 10.
Adze, 10.
Adzes, 1806.
After-damp, 10.
Agricultural engines, 32.
—— implements, 11.
Aich's metal, 33.
Air-blower, Gwynne's, 377.
—— brick, 33.
—— chamber, 34, 2677.
—— compressing engine, 520.
—— compressor, 524.
—— drain, 36.
—— engine, 36.
—— escape, 37.
—— grating, 34.
—— gun, 38.
—— holes, 38.
—— pipes, 38.
—— pumps, 39, 2691.
—— —— Barnett and Foster's, 2691.
—— resistance of, in mines, 62.
—— shaft, 41.
—— stove, 41.
—— trap, 41.
—— valve, 41.
—— velocity of, in mines, 69.
—— way, 41.
Ajutage, 41.
Albert Harbour at Greenock, 1838.
Albini's ship's compass, 1010.
Algebraic signs, 41.
Allan's feed-pipe connection for locomotive boilers, 1463.
Alloys, 46.
—— component elements of, 49.
—— fusibility of, 47, 49.
—— hardness of, 48.
—— of antimony, 111.
—— of arsenic, 145.
—— of bismuth, 337.
—— of copper, 1060.
—— of gold, 1697.
—— of iron, 2038.
—— of lead, 2214.
—— of manganese, 2354.
—— of silver, 2874.
—— oxidation of, 48.
—— specific gravity of, 47.
Alluvial deposits, 50.
Aluminium, 50.
—— bronze, 51.
Amalgam, 51.
Amalgamating machine, 51, 1118.
—— pan, 55, 2879.
Amalgamation pan, 54.
Amalgamator, Attwood's, 55.
Ambler's continuous brake, 585.
Ambulance, 56.
Ammonia in water, 3053.
Ammunition, 58.
Amsterdam level, 113.
Analysis, water, 3052.
Anchor, 58.
—— for steam ploughing, 12, 22.
—— of Victoria Dock gates, 60.
André's hydraulic mining pump, 2677, 2686.
Anemometer, 61.
Angle-bead, 90.
—— brace, 90.
—— brackets, 90.
—— iron, 93.
—— of friction, 92.
—— of repose, 92, 95, 2741.
—— or V bobs, 2676.
—— rafter, 95.
Angular motion, or velocity, 95.
Animal-charcoal machine, 104.
Annealing furnace, 110.
—— kiln, Crossley's, 2188.
—— steel for cutting-tools, 202.
Annular piston, 110.
Anstruther's electro-chronoscope, 1771.
Anti-corrosion, 110.
Anti-corrosive paints, 1093.
Anti-friction curve, Schiele's, 1586.
Anti-friction metal, 110.
Antimony, 110.
Anvil, 112, 1808.
Aperture, 112.
Appleby Brothers' pile-driver, 2635.
Appold's brake apparatus for laying submarine cables, 619.
Appolt's coke-ovens, 2556.
Approaches, 112.
Apron, 112.
—— in ship-building, 112.
—— lining, 113.
—— piece, 113.
Aqueduct, 113, 2147.
Arch, 121.
—— basket-handled, 265.
—— oblique, 700, 727, 790, 2517.
—— —— calculation of curves, 2522.
—— —— development of the curve of oblique section, 2518.
—— —— example of, 2526.
—— —— imposts, 2525.
—— —— projection of spiral line upon a cylindrical surface, 2519.
—— —— projection of spiral surface, 2519.
—— —— to find the oblique section, 2518.
—— —— twisting rules, 2523.
—— —— voussoirs, 2523.
Arched truss, McCallum's inflexible, 677.
Arches, abutments and piers of, 695.
—— buttresses, 697.
—— elliptical, 684.
—— general information for, 695.
—— general observations on the construction of, 697.
—— head-rings, 696.
—— parallel, in echellon, 734.
—— piers, 697.
—— plinths and cordons, 696.
—— proportions of various parts, 696.
—— segmental, 688.
—— semicircular, 684.
—— voussoirs, 696.
Archimedian screw, 123.
Area, 128.
—— drain, 128.
Areas, water supply and drainage, 3061.
Argentan, 128.
Armandie's balance-beam pump, 1945.
Arm-band, 128.
Arming press, 129.
Armour, 129.
Armstrong's accumulator, 1963.
—— dovetailing machine, 3112.
Arrastre, 142.
Arris, 143.
—— fillet, 143.
—— gutter, 143.
—— rail, 143.
—— wise, 143.
Arsenic, 144.
Artesian well, 145.
Artificial stone, 160.
—— water-channels, 3062.
Artillery, 160.
Ashlar backed with rubble, 2375.
—— bastard, 265.
—— in copings, 2376.
—— or ashler-work, 179, 2373.
Ashlering, 179.
Ash-pan, 180.
—— pit, 180.
Asphalte, 180, 939, 2783.
—— composition for street paving, 939, 2783.
Assay balance, 217.
Assaying, 182.
Atom, 189.
Atomic weights, 189.
Attemperator, 196.
Attic, 197.
Attwood's amalgamator, 55.
—— machine, 7, 197.
Auger, 197.
Autodynamic elevator, Champeaur's, 1938.
Automatic shaping machine for wood, 3115.
Awl, 203.
Axe, 203, 1806.
Axis, 203.
Axle-bearings, machine for boring, 2345.
—— box, 211.
—— grease, 203.
—— lathe, 2342.
—— tree, 211.
Axles, 203.
—— railway, 2402.

BABBIT'S metal, 211.
Back, 211.
—— day, 211.
Backer, 211.
Back-flap, 211.
—— hearth, 211.
—— in brewing, 211.
Backing, 211.
Back-joint, 211.
—— lash, 211.
—— lining of a boxing, 211.
—— —— of a sash-frame, 211.
—— links, 211.
—— of a window, 211.
Backwater, 211.
Badigeon, 211.
Bag, 211.
Balance, 211.
—— beam pump, Armandie's, 1945.
—— bobs, 2676.
—— valve, 217.
Balection, 217.
Balk, 217.
Ball-and-socket joint, 217.
Ballast, 217.
Ballasting, 584, 2725.
—— and boxing, railway, 2725.
Ballast-wagon, 218.
Ball-cock, 217.
—— lever, 217.
—— valve, 217.

Balcony, 214.
Balustrade, 214.
Banding plane, 214.
Band sawing machine, 2049.
Banker, 214.
Bank-note printing machine, 214.
Banquette, 1533.
Bar, 222.
Barbette, 222, 1533.
Barge-board, 222.
—— couples, 222.
—— course, 222.
Barker's mill, 230.
Barley-dressing machine, 222.
Barlow's cast-iron sleepers, 2587.
—— rails, 2593.
Barnett and Foster's air-pump, 2691.
Barn machinery, 223.
Barometer, 235, 2451.
Barometric calculations, 239.
—— tables, 240.
Barracks, 244.
Barrage, 250, 1135.
—— movable, 256.
Barrel, 264.
—— curb, 264.
—— drain, 264.
Barrier, 264.
Barrow, 264.
Bars, guard, 263.
—— river, 2762.
Bascule bridges, 263.
Base lines, 263, 2954, 2955.
Basement, 263.
Base plate, 263, 294.
Basin, 265.
Basket-handled arch, 265.
Bastard ashlar, 265.
—— stucco, 265.
—— toothed file, 265.
Bastion, 265, 1533.
Bat, 265.
Batchelar's kiln, 2187.
Batea, 265.
Bateau-vanne, 254.
Bath, 265.
—— metal, 265.
Batten, 266.
Battening, 266.
Batter, 266, 2373.
Battery, bichromate of potash, 270.
—— Bunsen's, 269.
—— Dalgleish's, 539, 540.
—— Daniell's, 269, 539, 2984.
—— employed to crush auriferous rocks, 272.
—— galvanic, 266, 534.
—— Grove's, 534, 539.
—— Hare's, 268.
—— Leclanché's, 2984.
—— McCallan's, 539.
—— Marie-Davy's, 2984.
—— Minotti's, 2984.
—— Muncke's, 268.
—— ship's, 276.
—— Smee's, 539.
—— Wollaston's, 268, 539.
Baulk, 217.
Bay, 292.
—— of joists, 292.
—— of roofing, 292.
Beacons, buoys, and lights, 2255, 2277.
Bead, 292.
—— and batten work, 293.
—— butt, 293.
—— flush, 293.
Beam, 293.
—— compasses, 1006.
—— engine, 2910.
—— filling, 293.
Beams, continuous, 2395.
—— cast-iron, experiments on, 764.
—— deflection of, 2397.
—— flitch, 2408.
—— rolled iron, strength of, 2406.
Bearer, 293.
Bearing, 293.
—— and sheet piles, 2618.
—— distance, 293.
—— out, 293.
Bed, 293.
—— plate, 294.
Bedding stone, 294.
—— timbers, the process of, 293.
Beetle, 294.
Bell, 294.
—— crank, 297.
Bell hanging, domestic, 297.
—— metal, 298.
—— trap, 299.
Bellows-pump, Motte's, 1945.
Bells, casting, 1549.
Belting, chain, 335.
Belts and pulleys, dimensions of, 317.
—— manufacture of, 312, 2014.
—— slip of, 299.
—— tension of, 303.
—— transmission of motion by means of, 299.
Bench, 336.
—— hook, 336.
—— marks, 336.
Bend, 337.
Bergstroem's boring machine, 523.
Berm, 337, 1533.
Bernot's file-cutting machine, 1466.
Bessemer steel process, 2923.
—— steel rails, 2598.
Beton, 337.
Bevel, 337.
—— angle, 337.
Bevelled gearing, 1635.
Bevels and squares, 1815.
Bevil, 337.
Bichromate of potash battery, 270.
Bickford's fuze-making machine, 1607.
Bignon's funnel, 1597.
Bilge-pumps, 1940, 2690.
Binders, 337.
Binding joists, 337.
Bird's mouth, 337.
Birmingham wire gauge, 1620.
Biscuit machine, 337.
Bisecting gauge, 2444.
Bismuth, 337.
Bits, 338.
—— and braces, 1822.
Blake's stone-breaking machine, 2544.
Blakiston's trough-shaped railway chairs, 2593.
Blast furnace, 338, 2046.
—— —— utilization of waste gases from, 352.
—— hot, 2054.
—— machines, fan, 376.
—— pipe, 366.
Blasting, 338, 529.
—— at Holyhead Harbour, 532.
—— at Seaford, Sussex, 560.
—— demolition of fort by, 529.
—— explosive compounds employed in, 581.
—— gunpowder, Schwartz's, 582.
Blende, 3116.
Blind area, 366.
Blinding, 366.
Block, 366.
Blockhouse, 367, 1533.
Blocking, 366.
—— course, 367.
Bloom, 367.
Blooming machine, 367.
Blowing engine, 368, 2053.
—— engines, Dowlais Iron-works, 372.
—— machine, 368.
—— ventilators, 1463.
Blow-off cock, 380.
Blow-pipe, 182, 380.
Board, 380.
Board-and-brace work, 380.
Boarding, 380.
—— joists, 380.
Boasting, 380.
Body-plan, ship-building, 380.
Boiler, 389, 2853.
—— Boardman's, 472.
—— Benson's, 473.
—— Cochrane's, 459.
—— Daglish and Co.'s, 466.
—— Dickerson's, 454.
—— Dundonald, 433.
—— Dunn's, 456, 466, 471.
—— Field, 472.
—— Howard's, 469.
—— Hawksley, Wild and Co.'s, 466, 472.
—— Humphrys', 459.
—— James', 430.
—— Loader and Child's, 474.
—— locomotive, 389, 474, 1085.
—— —— American, 476.
—— —— Beattie's L. & S.W.R., 476.
—— —— Cross's, 476.
—— —— Hasswell's Austrian, 476.
—— —— R. Stephenson's, 477.
—— —— S.E.R., 478.
—— —— Wakefield's G.S. & W.R., Ireland, 478.
—— marine, 389, 451, 2853.
Boiler, Montgomery's, 434.
—— Mont Storm's, 456.
—— Ogle's, 430.
—— plate bending machine, 1091.
—— —— flanging machine, 1090.
—— plates, 478.
—— practical rules, 428, 429.
—— Smart and Co.'s, 466.
—— Thomson's, 389.
—— various kinds of, 431.
—— wagon, 390.
—— Whittle, 390.
—— Williamson and Perkins', 465.
—— Wright's, 472.
Boilers, anti-corrosive, 1088.
—— corrosion of, 1085.
—— feed-water apparatus, 1161.
—— heating surface of, 440.
—— incrustation of, 2002.
—— locomotive, mountings for, 1189.
—— prevention of incrustation, 2003.
—— priming of, 448.
—— stationary, 465.
—— tubular, 441.
—— Woolwich Factory, 464.
Boiling-point, fixity of the temperature at, 419.
—— —— influence of substances in dissolution, 421.
Bolée's hydraulic ram, 1971.
Bolsters, 478.
Bolt-heads and nuts, hexagon, dimensions of, 2517.
Bolt-heads and nuts, weight of, 2517.
Bolting and dressing machines, flour, 2509.
—— mill, 479.
Bolts, 479.
—— and nuts, 2517.
—— forging, 1527.
Bolt threading machine, 2342.
Bond, 479.
—— common, 481.
—— course, 481, 482.
—— diagonal, 481.
—— Flemish, 479.
—— French military engineers, 480.
—— garden-wall, 479.
—— heart, 481.
—— Kruisverband, 480.
—— old English, 479.
—— ranging, 481.
—— timber, 481, 482.
—— Tyerman's patent hoop-iron, 482.
Bonding bricks, 482.
Bone-crushing mill, 12, 482.
Bone-mill, 12, 482.
Bonnet, 1533.
Boom-derrick, 2243.
Booth's steel-headed rails, 2598.
Boot-making machinery, 485.
—— sewing machine, 495.
Boring, accidents attending, 500.
—— and blasting, 498.
—— and drilling machines, 2325.
—— for minerals, 498, 1299.
—— for water, 145.
—— for water, London, 150.
—— for water, Paris, 151.
—— machine, wheel, 2344.
—— —— wood, 3104.
—— machinery, Bergstroem's, 523.
—— —— Low's, 515.
—— —— Mather and Platt's, 526.
—— tools used in, 146, 153.
—— wheel-hubs, Silver's hand machine, 1805.
Borings, tubing for, 513.
Bottling machine, 582.
—— —— Davidson's, 583.
—— —— Hayward Tyler's, 582.
Bottoming, 584.
Boulder paving, 584.
—— walls, 584.
Boundaries, 584.
Bow-compass, 584.
—— drill, 584.
—— pen, 584.
—— saw, 584.
Box, 584.
—— sextant, 2974.
Boxing and ballasting, railway, 2725.
—— of a shutter, 584.
Boyau, 584, 1533.
Brace, 584.
Braces and bits, 1822.
Bracket, 584.
Brake or break, 585.
—— Adams', 595.

Brake, Ambler's, 585.
—— apparatus for laying submarine cables, Appold's, 619.
—— continuous, 585.
—— Davis', 594.
—— dynamometer, 616.
—— —— Emerson's 627.
—— —— Prony's friction, 616.
—— Fay's, 599.
—— Gilman's hemp, 628.
—— Goodnow's, 596.
—— Guêrin's, 608.
—— Ingram's, 602.
—— Krauss and Co.'s, 614.
—— Landsee's, 613.
—— Lee's, 594.
—— Newall's, 599.
—— Stilmant's, 588.
—— various forms of, used in France, 593.
Brakes, experiments on the power of, 1351.
—— steam, 611.
Bramah press, 1983.
Brandering, 629.
Bran-separator, 228, 629.
Brass, 629.
—— and copper, tinning of, 1558.
—— founding, 1555.
—— guns, casting, 1549.
Brazing copper, 629.
—— solders, 629.
Bread and biscuit machinery, Vicar's, 637.
—— machine, 630.
Bread-making machinery, Watson's, 630.
Breaking joint, 479, 640.
Breakwater, 629.
Breast-wall, 640.
—— water-wheels, 640, 1915.
—— wheel, 640, 1915.
—— work, 640, 1533.
Breckon and Dixon's coke ovens, 2554.
Breeze, 640.
—— oven, 640.
Bressummer, 640.
Brewing apparatus, 640.
Brick conduits, 3062.
—— drying apparatus, Parish's, 651.
—— kiln, English, 660.
—— —— firing, 661.
—— —— Indian, 660.
Brick-making machinery, 642.
—— —— Clayton and Co.'s, 642, 650, 652, 654.
—— —— Large's, 655.
—— —— Murtha's, 651.
—— —— Oates', 642.
—— —— Platt and Co.'s, 647.
—— nogging, 665.
—— trimmer, 665.
Bricks, bonding, 482.
—— burning, in clamp, 661.
—— clinker, 661.
—— drying, 659.
—— moulding, 659.
—— place, 661.
—— stock, 661.
Brickwork, 1023, 2718.
Bridge, 265, 665, 727, 2517, 2719.
—— Britannia, 740.
—— Broadwall, 756.
—— building, Roebling's system, 702, 727.
—— Charing Cross, 748.
—— Chelsea suspension, 764, 863.
—— construction, timber, 735.
—— head, 880.
—— hydraulic swing, over the river Ouse, 791.
—— improved Howe truss, 675.
—— Long's truss, 672.
—— McCallum's inflexible arched truss, 677.
—— Monongahela River, 758.
—— Steele's improved Burr truss, 674.
—— the Burr truss, 671.
—— the Howe truss, 673.
—— trussed girder, calculation of different strains, 721.
—— Wellington Street, 756.
Bridges, bascule, 265.
—— chain and suspension, 760.
—— combined suspension and truss, 680.
—— girder, bearing rollers, 787, 789.
—— —— calculation for simple lattice, 797.
—— —— cross-girders, 776.
—— —— flooring of, 774.
—— —— horizontal trussing, 778.
—— —— loads applicable to principal girders, 787.
—— —— loads applicable to railway bridges, 788.
Bridges, girder, loads applicable to road bridges, 788.
—— —— moments of rupture, and shearing strains for, 766.
—— —— proportion between span, bearing, and total length, 787.
—— —— rivetings and bolts, 773.
—— —— tables of formulæ, 865.
—— —— vertical trussing, 777.
—— —— weight of parts, 783.
—— —— weight of road, 858.
—— iron, 680, 739, 748, 765.
—— oblique, 700, 727, 790, 2517.
—— —— helicoidal arrangement, 727.
—— —— orthogonal arrangement, 732.
—— —— parallel arches in echelon, 734.
—— —— timber, 734.
—— skew, 700, 727, 790, 2517.
—— stone, 683, 739, 2517.
—— —— dimensions of existing, 699.
—— —— formulæ for principal dimensions, 699.
—— suspension, 741, 760.
—— wooden, 671.
Brisure, 1533.
Britannia Bridge, 740.
—— metal, 880.
Bronze, 880.
—— aluminium, 51.
Brückner's cylinder for roasting silver ores, 2549.
—— process for chloridizing silver ore, 1603.
Buckled plates, strength and weight of, 2410.
Buddle, 880.
—— for lead ores, 2539.
Buddling tin ores, 2528, 2529.
Buffer, 881.
—— Sterne's, 882.
Buffing and drawing apparatus, Chattaway's, 881.
Building, 883.
Bullet-making machine, 883.
—— —— Anderson's, 885.
—— —— Custar's, 885.
Bung-cutting machine, 886.
Bunsen's battery, 269.
Buoys, lights, and beacons, 886, 2255, 2277.
Burel's reflecting level, 1007.
Burnisher, 886.
Burr bridge, 671.
—— truss, 672.
—— —— Steele's improved, 674.
Bush, 886.
Butterfly-valve, 886.
Buttock-line, 394.
Buttress, 886, 2747.
Butt-weld, 886.

CABLE, 886.
Cables, chain, strength of, 2387.
—— experiments to determine curvature of, 893.
—— strength of, 891, 2387.
Cage, safety, 897.
Caisson, 898, 1021.
Calamine, 3116.
Calculating instruments, 2.
Calender, 899.
—— More's, 900.
—— Thomson and Co.'s, 899.
Caligny's conical pump, 1938.
Calipers, 903.
—— and compasses, 1830.
Calking, 903.
—— iron, 903.
Caloritic action in the formation of steam, 422.
—— capacity of bodies, 392, 394.
—— —— of gases, 393.
—— power, application of, 401.
Cam, 903, 1638, 2424.
Camera lucida, 906.
Campbell and Co.'s floating dock, 1264.
Canal, 907.
—— locks, 2307.
—— Suez, 917.
Canals, motion of water in, 907.
Candle-making machine, Harrison Gambo's, 929.
—— wicks, 925.
Candles, 922.
—— composite, 928.
—— dips, 926.
—— moulds, 927.
Cannon casting, 1556.
Caoutchouc, 929, 2004.
Caponnière, 1533.
Capstan, 929.
Cardboard-cutting machine, 929.
Carpet-beating machine, 929.
Carpets, india-rubber, 2013.
Carré's ice-making machine, 1998.
Carrett and Co.'s steam-pump, 1939.
Carriage planing machine, 3095.
Carrier, 929.
Carr's disintegrating flour-mill, 2188.
—— mineral disintegrator, 2545.
Carrying and tipping coal, Rigg's apparatus 1857.
Cartridge, 929.
Cartridges, 1495.
Cartwright's cordelier, 2926.
Carvers' and print-cutters' tools, 1825.
Carving machinery, 929.
Case-hardening, 929.
Casemate, 929, 1553.
Cask machinery, 929, 2917.
Cask-making machine, Hadfield's, 2917.
Casion and Fagg's type-founding machine, 1565
Cast iron, 2041.
—— —— refining, 2071.
—— —— refining, theory of, 2074.
—— steel, 2934.
Casting and founding, 929, 1535.
—— bells, 1549.
—— brass guns, 1549.
—— cannon, 1556.
—— metals, Johnson's moulds for, 1540.
Castraise pump, 1944.
Catadioptric light, 2265.
Catapult, 929.
Cathetometer, 930, 2278.
Cement, 931, 2279.
—— for stone and brick work, 939.
—— Goreham's kiln for burning, 2178.
—— hydraulic, natural and artificial, 936.
—— india-rubber 2010.
—— Portland, 931.
—— Roman, 933.
Cementation steel, 2921.
Cements for cast iron, 939.
—— limes and mortars, 931, 2279.
Centre-bit, 939.
Centre of gravity, 939, 1122.
—— of gyration, 103.
—— of oscillation, 2552.
—— of pressure, 1120.
Centrifugal force, 99.
—— pump, 939, 1948, 2679.
—— pumps, Colgnard and Co.'s, 1951.
—— —— efficiency of, 2680.
—— —— Gwynne and Co.'s, 1949, 1958.
—— —— Neut and Dumont's, 1946.
—— —— proportions of parts, 2679.
Centrolineal, 2444.
Chaff-cutter, 229, 939.
Chain belting, 335.
—— cables and hawsers, 892.
—— —— strength of, 891, 2387.
—— Fielden's cast link, 336.
—— pump, 940, 1937, 2680.
—— pumps, Murray's, 2680.
Chains, surveying, 2954.
Chairs, Blakiston's trough-shaped, 2593.
—— Fowler's joint, 2591.
—— keys and fastenings for permanent way 2589.
—— Ransomes and May's cast-iron, 2590.
Champsaur's autodynamic elevator, 1938.
Châtillonais press, the, 16.
Chattaway's central buffing and drawing apparatus, 881.
Check-valve, 940.
Cheese press, 940.
—— vat, 940.
Chelsea suspension bridge, 764, 863.
Chemical nomenclature, 195.
Chevaux de frise, 941, 1533.
Chimney, 941.
Chimneys, calculation of diameter, 954.
—— construction of, 957.
—— draught, 956.
—— effects produced by meeting of currents 950.
—— factory, 957.
—— —— dimensions of, 952.
—— —— general considerations on, 948.
—— flow of air in, 948.
—— influence of cooling of the outer surface upon the draught, 954.
—— lateral pressure in, 950.
—— loss of heat occasioned by, 951.
—— registers, 960.
—— sections of, for different kinds of fuel, 963.
Chisel, 961.

Chisels and gouges, 1819.
Chlorididizing silver ore, Brückner's process, 1603.
Chocolate machine, 961.
Choke-damp, 18.
Chronograph, 961.
Chuck, 961.
Churn, 961.
Cider-mill, 961.
—— press, 16.
Circles, primitive, or pitch, 1627.
Circular saw, 961.
Circumferentor, 961, 2672.
Clack-valve, 961.
Clamp, 961.
—— of bricks, 661.
Clark's hydraulic-lift dock, 1265.
Clausthal furnace, 1601.
Clay's machinery for heavy forging, 1530.
Clean, 961.
Clifton suspension bridge, 760.
Clinometer, De Lisle's, 2772.
Clip-drum, 961.
Clowes's chain belting, 335.
Cloth-working machinery, 961.
Club-houses, ventilation and warming of, 3038.
Clutch, 962.
Coal-cutting machine, 962.
—— —— Donisthorpe's, 965.
—— —— Frith's, 962.
—— —— hydraulic, 968.
Coal, heat developed by, 438, 446.
—— mining, 971.
—— Rigg's apparatus, carrying and tipping, 1857.
—— shipping and keels, 2170.
—— washing machine, 979.
Coast defence, 983.
—— defences, classification of, 988.
—— —— English, estimated cost of, 999.
—— —— general principles of, 985.
—— —— history, 984.
—— —— notes on batteries, 997.
—— —— reconnaissance of sea frontier, 984.
Coefficients of crushing strength, 2383.
—— of specific heat, 393, 394.
—— of tearing strength, 2387.
Coffee-hulling machine, 1004.
—— mill, 1004.
Coffer-dam, 1005, 1021.
Cog-wheels, 1005.
Cohesion, 1005, 2377.
Coignet's agglomerated concrete, 937.
Coil, 1005.
Coke oven, 2553.
—— —— Appolt's, 2556.
—— —— Beckon and Dixon's, 2554.
—— —— Lord Dundonald's, 2553.
—— —— the Knab or Pernolet, 2557.
Coking oven, 1005.
Collar, 1005.
Collom's ore-washing machine, 2546.
Combing machine, 1005.
Common bond, 481.
—— water-wheels, 1912.
Compass, 1005.
—— bow, 584.
—— mining, Hedley's, 1015.
—— prismatic, 2976.
—— reconnoitring, 1007.
—— ship's, Albini's, 1010.
Compasses, 1005.
—— and callipers, 1830.
—— beam, 1006.
—— proportional, 2444.
Compound engine, 2902.
Compressed-air pumps, Laburthe's, 1946.
Compressive strength of materials, 2382.
Concrete, 1016, 1017, 2284.
—— Coignet's agglomerated, 937, 939.
Concretes, lime, 2284.
—— mixing, 2287.
—— Portland cement, 2286.
—— Roman cement, 2285.
Condensation of steam, 421.
Condenser, 1016, 1170, 1176, 2853, 2898.
Conduits and feeders, 3062.
—— water-works, 3062.
Conical-plate planing machine, 1794.
Construction, 1016.
Continuous beams, 2395.
—— brakes, 585.
Contractors' pumps, 2690.
Cooler, 1055.
Coopers' tools, 1814.
Coping, 1082.
Copper, 1059.
Copper, alloys of, 1060.
—— and brass, tinning of, 1558.
—— brazing, 629.
—— chemical properties of, 1071.
—— manufacture of, 1061.
—— ore, crushing, 2536.
—— —— dressing, 2535.
—— —— jigging, 2536.
—— ores of, 1059.
—— smelting of, 1061, 1076.
—— uses of, 1061.
Coppersmiths' and tinsmiths' tools, 1809.
Cop-spinner, 1082.
Corbel, 585.
—— piece, 479.
Cordelier, Cartwright's, 2826.
Cork-cutting machine, 1082.
Corliss engine, 1403.
Corn-crushers, 229.
—— mill, 1085.
—— —— portable, 288.
Cornice, 1085.
Cornish engine, 1085, 2913.
—— pump, 2681.
Corrosion, 1085.
—— of steam-boilers, 1085.
Corrugated iron, 2410.
Cotter, 1093.
Cotton-gin, 1093, 1114, 1668.
—— machinery, 1093.
—— —— Arkwright's, 1095.
—— —— carding, 1099, 1115.
—— —— drawing, 1103.
—— —— Hargreaves', 1094.
—— —— opening, 1097.
—— —— scutching, 1097.
—— —— slubbing and roving, 1105.
—— —— spinning, 1107.
—— press, 1117.
Counter, 1117.
—— balance, 1117.
—— fort, 1117, 1533, 2746.
—— mine, 1117, 1533.
Counterscarp, 1533.
Counters for public carriages, 2.
Countersunk, 1117.
Coupling, 1117.
Courses, arrangement in masonry, 2376.
—— thickness in masonry, 2376.
Cousinet, 1117.
Covered way, 1117, 1533.
Cow-milking machine, 16.
Crab, 1117.
Cradle, 1117.
Cramp, 1117.
Crane, 1117, 1965, 2231, 2921.
Cranes, hydraulic, 1965.
Crank, 1117.
Crémaillère, 1533.
Creosoting, 2205.
Crest, 1533.
Cross cutting, sawing machine for, 3091.
—— head, 1117.
Crossing, Ransomes and Biddell's main line, 2606.
Crossings, points, and switches, 2600, 2604, 2866.
Crossley's annealing kiln, 2188.
Cross-section of line, railway, 2712.
—— sections, vertical, ship's, 387.
Crowbar, 1117.
Crown wheel, 1117.
Crucibles, 1118, 1549.
—— apparatus for making, 1549.
Crushing and amalgamating machine, 51, 1118.
—— copper ores, 2536.
—— mill for lead ores, 2539.
—— strength of materials, coefficients of, 2383.
Cultivation by steam power, 20.
Culverts, 1119, 2710, 2724, 3064.
—— water-works, 3064.
Cupola furnaces, 2061.
Cupolas and domes, 2792.
Current, shock of, retaining walls, 2738.
Curriers' and tanners' hand-tools, 1826.
Curves and gradients, 2701.
—— for teeth of wheels, 1621.
—— resistance of, 2705.
Curvilinear slotting machine, 2335.
Cusheon, 1117.
Cutting-tools, annealing steel for, 202.
Cuttings and embankments, railway, 1383, 2711.
—— drainage of, 2714.
Cyclograph, 2444.
Cycloid, 1621.
Cylinders of pumps, 2671.
Cylindrical gearing, 1631.

DALGLEISH'S battery, 539, 540.
Dam, 250, 1119, 2743.
—— on the river Furens, 1132.
—— sand in Holland, 1126.
Damming, 1119.
Damp course, 1025.
Damper, 1161.
Dams and weirs, retaining walls, 2743.
—— comparison of stone, 1139.
—— formulæ for section of, 1146.
Daniell's battery, 269, 539.
Darcy's hydraulic gauge, 1908.
Dash-pot, 1161.
Datum line, 113, 1161.
Davidson's bottling machine, 583.
Davis' brake, 594.
Dead centre, 1161.
Deas and Rapier's switch-box, 2603.
De Bergue's cast-iron sleepers, 2588.
Deblai, 1534.
Deflection, experiments on, 332.
—— of beams, 2397.
Demi-bastion, 1534.
—— lune, 1534.
Dentists' and goldsmiths' rolls, 1810.
Derrick, 1161, 2243.
Details of engines, 1161.
Devil, 1201.
Diagonal bond, 481.
Diagram, graphic, 1703.
Dial, 1201.
—— float, 1911.
—— Hedley's mining, 1015.
Dies, 1201, 1822.
—— and stocks, 1822.
Digester, 1202.
Dilluing tin ores, 2534.
Dimensions, abstracting, 5.
—— of existing stone bridges, 699.
Disc piles, 2642.
Disintegrating flour-mill, 2488.
Disintegrator, Carr's mineral, 2545.
Displacement, 1202.
Distances, 1210.
—— instruments for determining, 1210.
Distemper, 1053.
Distilling apparatus, 1214.
—— sea-water, 1219.
—— spirits, 1217.
Distributing reservoirs, 3070.
Diver, constitutional fitness of, 1226.
Dividing machine, 1226, 1802.
Diving, 1226.
—— apparatus, 1226.
—— bell, 1231.
Dock, 1234.
—— gates, dry-dock gates, 2293.
—— —— inner gates, 2293.
—— —— iron gates at Boulogne, 2298.
—— —— materials employed, 2293.
—— —— mixed gates at Fécamp, 2298.
—— —— opening and closing, 2293.
—— —— outer or deep-water-basin gates, 2292.
—— —— scouring gates, 2293.
—— —— sea gates, 2293.
—— —— wooden, 2294, 2296, 2302, 2303.
—— —— wrought iron, 2305.
—— graving, 1704.
Docks, construction without coffer-dams, 1840.
—— Clark's hydraulic lift, 1265.
—— floating, Campbell and Co.'s, 1264.
—— —— Rennie's, 1262.
—— principal dimensions of, 1268.
—— pumps for emptying, 2690.
—— retaining walls, 2743.
—— Tyne, at South Shields, 1254.
—— Victoria, 1234.
Dog, 1272.
Dolly, or dolly-tub, 1272.
Dome, 1272.
Domes and cupolas, 2792.
Donisthorpe's coal-cutting machine, 965.
Donkey-engine, 1272.
Doors, 1044.
Double-action water-pressure engine, 1978.
Double-trunk screw engines, 2842.
Dovetail, 1272.
Dovetailing machinery, 3110.
Dowel-pin, 1272.
Dowlais Iron Works blowing engine, 372.
Drag-bar, 1272.
Drainage, 1272, 2147, 2689, 2714, 2715, 2780.
—— areas, 3061.
—— —— and water supply, 3061.
—— of cuttings, 2714.

Drainage, embankments, 2715.
—— mines, 1272.
—— —— pumps for, 2681.
—— roads, 2780.
—— surface, 2689.
Draw-bar, 1272.
Drawbridge, 1284.
Drawing and cutting-off piles, 2623.
—— frame, 1291.
—— knives, 1821.
Dredging, 1291, 2756.
—— machine, 1291, 1293.
Dressing machines for flour, 2509.
Drill, 1299.
—— bow, 584.
Drilling and boring machines, 2325.
—— machine, hand, 1836.
—— —— multiple, 2344.
Drum, 1301.
Drums, various modes of driving, 312.
Dry-rot, 1301.
—— prevention of, 2205.
Drying bricks, 659.
Duct-wheels, 1301.
Dundonald's coke-ovens, 2553.
Durozoi's hydraulic propeller, 1938.
Duster, 1301.
Dwelling-houses, ventilation and warming of, 3037.
—— —— ventilation of, 3044.
Dyke, 1301, 2757.
Dynamite, 582, 1301.
Dynamometer, 1301.
—— brake, 616, 627.
—— car, 1306.

EARLE'S steam-pump, 1940.
Earth pressure, 2736.
Earthwork, 1364.
Eccentric, 1364.
Efflux chamber, 1364.
Ekman's reheating furnace, 2121.
Elasticity, moduli of, 2381.
—— of bodies, 2377.
Electric telegraph, 1367.
Electro-chronoscope, Anstruther's, 1771.
—— magnet, 1367.
—— metallurgy, 1367.
Electrometer, 1383.
Electrotype, 1383.
Electrotyping, 1382.
Elevator, 1383, 2221.
—— autodynamic, 1938.
Elevators, hoists, and lifts, 2221.
Elipsograph, 2427.
Ellipsis, methods of drawing, 687.
Elliptical arches, 684.
Embankment, 1383, 2711, 2758.
Embankments and cuttings, railway, 1383, 2711.
Embossing, 1403.
Embrasure, 1534.
Embroidering machine, 1403.
Emerson's dynamometer-brake, 627.
Emery, 1403.
Enceinte, 1534.
Endless chain pile-driver, 2636.
—— screw and pinion, 1637.
Engine, agricultural, 32.
—— air-compressing, 520.
—— Allen, 1408.
—— American pumping, 1417, 1419.
—— beam, 2910.
—— Chaplin's hoisting, 1425.
—— compound, 2902.
—— Corliss, 1403.
—— Cornish, 1085, 2913.
—— double-trunk screw, 2842.
—— Fletcher and Co.'s winding, 1424.
—— horizontal, 2912, 2916.
—— Lee and Co.'s steam fire, 1954.
—— marine, 2354.
—— Mazeline's steam fire, 1955.
—— Merryweather's steam fire, 1429, 1955.
—— Ommanney and Co.'s horizontal pumping, 1421.
—— oscillating, 1423.
—— portable, 11, 32.
—— return-acting trunk screw, 2843.
—— return connecting-rod screw, 2846.
—— screw, 2841.
—— Shand and Mason's steam fire, 1431.
—— single piston-rod screw, 2845.
—— stationary, 2898.
—— steam-launch screw, 2855.
—— the Allen, 1408.
Engine, vertical, 2913.
—— water-pressure, 1973, 1976, 1978.
—— Wilson's direct-acting, 1416.
Engines, varieties of, 1403.
English brick-clamp, 661.
—— brick-kiln, 660.
Engravers' tools, 1816.
Entanglement, 5.
Envelope, or envelop, 1534.
—— machine, 1435.
Epaulement, 1534.
Epicyclic train, 2451.
Epicycloid, 1622.
—— gearing, 1630, 1632.
—— wheel, 1438.
Equilibrium of forces, 665.
Escapement, 1438.
Escape-valve, 1445.
Esplanade, 1534.
Euler's turbine, 1924.
Evaporating apparatus for sugar, 1445.
—— power of fuel, 401.
Evaporator pan, 1445.
Evart's dovetailing machine, 3114.
Excavation, 1447.
Exhaust-pipe, 1447.
Expansion-gear, 1447.
—— joint, 1447.
—— of rails, 2593, 2726.
—— work developed by, 424.
Explosions, 1447.
Explosive compounds for blasting, 581, 1301, 1721, 1770, 1783.
Eyeletting machine, 1447.

FAIRLIE locomotive, 2321.
Falling bodies, 5, 7.
Fan, 1447.
—— blast machines, 376.
—— Guibal's ventilating, 1447.
Farcot's steam-pump, 1941.
Fascines, 1017.
Fastener, belt, 312.
Faults, 1463.
Feeders and conduits, 3062.
Feed-pipe, 1463.
—— —— connection for locomotive engines, 1463.
—— pump, 1464.
—— water, purification of, 2003.
Fencing for roads, 2785.
—— railway, 2725.
Field boiler, 472.
Fielden's cast link-chain, 336.
Filbow, or filbo, 1464.
File, 1465, 1817.
—— cutting machine, 1465.
Files and rasps, 1817.
Filter, 1469.
—— beds, cleansing of, 3073.
—— —— preparation of the bottom, 3073.
Filtering galleries, Toulouse water-works, 3074.
Filters, 3074.
Filtration, 3071.
Fire-arms, 1469.
—— —— American, experiments and reports, 1469.
—— box, 1495.
—— bridge, 1495.
—— clay, 1495.
—— —— retorts, 1554.
—— engine, 1496, 1954.
—— escape, 1497.
—— fire-clay, and fire-brick, 1535.
Fish-plates, 2590.
Flange, 1497.
Flanging machine, 2341.
Flank, 1534.
Flax machinery, 1497.
Flèche, 1534.
Flemish bond, 479.
Float water-wheels, 1511.
Floating dock, Campbell and Co.'s, 1264.
—— —— Rennie's, 1262.
—— gate, 254.
Flood-gate, 255.
Flooring, 1524.
Floors, 1039.
—— asphalte, 1043.
—— coverings for, 1041.
—— fire-proof, 1041.
—— framed, 1040.
—— Maltese, 1042.
—— Moreland's, 1524.
—— single, 1039.
Flour, bolting and dressing machines, 2509.
—— mill, 2500.
—— —— Buchholz process, 2492.
—— —— Carr's disintegrating, 2489.
—— —— floating steam, 2499.
—— —— portable, 228.
Flue, 1525.
Fluid pressure, 1688, 2734.
—— vein, 1889.
Flume, 1525.
Fly-wheel, 1525.
Flying levels, 2698.
Folding and measuring machine, 1525, 2415.
Force, 1525.
—— centrifugal, 99.
Forces, equilibrium of, 665.
Forge, 1525.
—— German, 2069.
—— portable, 1530.
Forging bolts, 1527.
—— keys, 1525.
—— machinery for, 1530.
—— nuts, 1528.
Formulæ for stone bridges, 683.
—— tables of, for girders, 865.
Fortification, 1533.
Foundations, 1016, 1535.
—— concrete, 1017.
—— coffer-dams, 1021.
—— fascines, 1017.
—— hollow cylinders, 1019.
—— in water, 1020, 1021.
—— —— loose stones, 1020.
—— —— regular masonry, 1021.
—— piling, 1018.
Founding and casting, 929, 1535.
Foundry, 1569.
—— hoists, 2249.
Fowler's pin-making machine, 2645.
Fractions of safety, 2406.
Fret sawing machine, 3093.
Frick's metal, 1569.
Friction, 1331, 1349, 1569.
—— brake, Prony's, 616.
—— during a shock, 1578.
—— in grease-box, 1331.
—— locomotives, 1331, 1349.
—— oil-box, 1331.
—— trains, 1331.
—— influence of unguents, 1576.
—— influence of vibrations, 1576.
—— of brass upon oak, 1574.
—— cast iron on cast iron, 1575, 1580.
—— elm upon oak, 1573.
—— journals, 1331, 1581, 1585.
—— leather upon cast iron, 1574.
—— limestone upon limestone, 1573, 1577.
—— oak upon oak, 1572, 1576.
—— plane surfaces, 1583.
Frictional gearing, 1592.
Frith's coal-cutting machine, 962.
Front, fortification, 1534.
Fuel, 399, 1592.
—— analysis of, 1595.
—— evaporating power of, 401.
—— heat supplied by, 398.
—— increase of temperature by expenditure of, 401.
Fuller's earth, 1597.
Funicular polygon, 669.
Funnel, 1597.
Furnace, 338, 1597, 2046, 2061, 2116.
—— Clausthal, 1601.
—— Ekman's reheating, 2121.
—— reverberatory, 1597.
—— Stetefeldt, 1604.
—— Thomas's smelting, 1602.
Furnaces or roast ovens, 1597.
—— blast, 338, 2046.
—— cupola, 2061.
—— heating and balling, 2116.
Fusibility of alloys, 47, 49.
Fusion heat, 397.
Fuze, 1607.
—— making machine, Bickford's, 1607.
Fuzee, 1610.
Fuzes, 575.

GABION, 1534, 1610.
Gad, 1610.
Galena, 2209.
Gallery, 1534.
Galvanic battery, 266.
—— —— for military purposes, 534.
—— currents, power of, 541, 544.

Galvanism, 1610.
Galvanized iron, 1610.
Galvanometer, 841
Gantries, staging, and scaffolds, 2937
Garden-wall band, 479.
Gas, 1610.
—— exhauster, Gwynne's, 377.
—— flow of, 402, 405, 406.
—— holder, 1620.
—— manufacture of, 1610
—— meter, 1620, 2461.
—— —— dry, 2466.
—— —— wet, 2461.
—— puddling furnace, Siemens', 2087.
—— velocity through pipes, 406.
Gases, calorific capacity of, 393.
—— utilization of waste, from blast furnaces, 352.
Gasometer, 1620.
Gates, 1620.
Gauge, 1620, 2701.
—— Birmingham wire, 1620.
—— Darcy's hydraulic, 1908.
—— rain, 3054.
—— steam, 1621
Gear, expansion, 1447.
Gearing, 1621.
—— bevelled, 1625.
—— cams, 1638.
—— curves for teeth of wheels, 1621.
—— cycloid, 1621.
—— cylindrical, 1631.
—— dimensions and form of teeth, 1628.
—— —— of parts, 1627.
—— endless screw and pinion, 1637.
—— epicycloid, 1622, 1630, 1632.
—— frictional, 1592.
—— hypocycloid, 1624.
—— inner, 1633.
—— involute, 1626, 1632.
—— methods of tracing forms, 1630.
—— pitch-circles and lines, 1627.
—— rack and pinion, 1633.
—— relation of velocity to be obtained, 1627.
—— various kinds of, 1641.
Genouillere, 1534.
Geodesy, 1647.
German forge, 2069.
—— silver, 1668.
Giffard's injector, 2025.
Gilman's hemp-brake, 628.
Gimbals, 1668.
Gin, 1668.
Girard's horizontal pump, 1942.
—— lifting turbine, 1952.
—— turbine, 1925.
Girder bridges, bearing rollers, 787, 789.
—— —— calculation of simple lattice, 797.
—— —— cross-girders, 776.
—— —— flooring of, 774.
—— —— horizontal trussing, 778.
—— —— loads applicable to, 787.
—— —— tables of formulæ, 865.
—— —— trussed, strains in, 721.
—— —— vertical trussing, 777.
—— —— weight of parts, 783.
—— —— weight of road, 858.
Girders, arched, 842.
—— bow, 840, 850.
—— comparison between straight and arched, 850.
—— comparison of systems, 858.
—— double crosses, 828.
—— formulæ giving weight and height, 813.
—— formulæ of weight, 829.
—— lattice, 797, 828, 2209.
—— moments of rupture and transverse strains, 766.
—— multiple lattice, 828.
—— of crosses and vertical rods, 820.
—— of crosses or double lattice, 819, 821.
—— rivetings and bolts, 773.
—— simple lattice, 797.
—— tables and formulæ, 865.
—— tables of weights, 826, 833.
Gland, 1668.
Glasgow Water-works aqueduct, 113.
Glass, analysis of, 1688.
—— bottle, 1683.
—— coloured, 1687.
—— colourless, 1678.
—— furnace, 1669.
—— machinery, 1669.
—— manufacture of, for optical purposes, 1684.
—— manufacture of plate, 1669.
—— manufacture of sheet, 1672.
—— painting on, 1687.
—— soluble, 1677.
Glazing, 1054.
Gold, 1689.
—— alloys of, 1695.
—— analysis and assaying, 1696.
—— and silver, 1695.
—— metallurgy of, 1694.
Goldsmiths' and dentists' rolls, 1810.
Goniometer, 1697.
Goodnow's brake, 596.
Gordon printing press, 2661.
—— —— press, by Carwood, 2664.
Goreham's kiln for burning cement, 2178.
Gorse-crushers, or cutters, 229.
Gothic roofs, 2790.
Gouge, 1699, 1819.
Governor, Clayton and Shuttleworth's, 1699.
—— Farcot's marine engine, 1702.
—— Miller and Knill's, 1701.
—— Roby and Richardson's, 1699.
—— Silver's, 1701.
—— steam-engine, 101, 1699.
Gradients and curves, railway, 2701.
—— and tractive resistance of roads, 2775.
Grain-drying kiln, 2193.
—— elevators, 2251.
Graphic diagram, 1703.
—— tracing, 405, 416.
Graphical determination of tensions, 669.
Grate, 1704.
Grates, 3045.
—— Joly's, 3046.
Graving dock, 1704.
Gravity, 1704.
—— action of, 5.
Greaves' cast-iron sleepers, 2587.
Grindstone, 1717.
Grist-mill, 1718.
Ground-auger, 1718.
Grove's battery, 535, 539.
Gudgeon, 1718.
Guérin's brake, 608.
Guibal's ventilating fan, 1447.
Gun-carriage, 1718.
—— —— Captain Scott's naval, 1718.
—— —— Moncrieff system, 1720.
—— cotton, 1721, 1783.
—— machinery, rifled, 1789.
—— metal, 1721.
Gunner's quadrant, 2771.
Gunnery, 1722.
Gunpowder, 1777.
—— manufacture of, 1780.
—— Schwartz's blasting, 582.
Guns, American, 172.
—— power of, 171.
—— range of, 170.
—— resistance of, to bursting, 161.
—— Sterro-metal for lining, 177.
Gwynne's centrifugal pump, 1949, 1958.
—— gas-exhauster and air-blower, 377.
Gyration, 1794.
—— centre of, 103.

HACKLE, or heckle, 1796.
Hadfield's machines for making casks, 2917.
Half-breadth plan, ship-building, 380.
Half-moon, fortification, 1534.
Hammer, 1796, 1810.
Hand-frame for tin ores, 2532.
—— gear, 1796.
—— pump, 1796.
—— saw, 1796, 1813.
—— tools, 1796.
Handley's brake, 595.
Hanger, 1836.
Hanson's flanging machine, 2341.
Harbour, 1838.
Harbours, construction of, 1838.
Hardness of alloys, 48.
—— of water, ascertaining, 3054.
Hare's battery, 268.
Harper's safety-cage, 897.
Harrison Gambo's candle machine, 929.
Haulage of coal, endless-rope system, 1863, 1877.
—— —— tail-rope system, 1848, 1872.
Haunch, 1879.
Hawsers and chain-cables, 60.
Haymaking machine, 17.
Hayward Tyler's bottling machine, 582.
—— —— universal mining pump, 2683.
Header, 479.
Heart-bond, 481.
Heat, coefficient of specific, 393.
—— developed from coal, 446.
—— fusion, 397.
Heat, latent, 397.
—— —— of steam, 398.
—— quantities supplied by fuel, 399, 438.
—— relation of temperature of bodies to, 394.
—— sources of, 399.
—— specific, 392.
—— unity of, 392.
Heated air, motion of, in vertical tubes, 941.
Heating and balling furnace, 2116.
Hedley's mining compass, 1015.
Helicoidal float water-wheel, 1917.
Heliostat, 1879.
Helix, 1880.
Hemp-brake, Gilman's, 628.
—— ropes, 2821.
Henry and Peyrolles' pump, 1944.
Hinges, various kinds of, 1881.
Hinging, 1880.
Hip-rafter, 95.
Hocking's substitute for stand-pipe, 1979.
Hoe, 1885.
Hoffman's kiln, 2180.
Hoisting engine, Chaplin's, 1425.
Hoists, foundry, 2249.
—— lifts and elevators, 1885, 2221.
Holland, sand dams in, 1126.
Hop elevator, 1885.
Horizontal axis turbine, 1930.
—— engine, 2912, 2916.
—— pump, Girard's, 1942.
—— water-pressure engine, 1978.
Hornwork, fortification, 1534.
Horse gear, 12.
—— power, H.P., 1885.
—— —— or horse-engine, 1885.
—— rakes, 19.
Hospitals, ventilation and warming, 3026.
Hot blast, 346, 2054.
—— —— stoves, 1885.
Hotching tub for lead ores, 2538, 2541.
Howe truss, 673.
—— —— improved, 675.
Howitzer, 1885.
Hub, 1885.
Huddart's rope-making machinery, 2827.
Hydrant, 1885, 1994, 1995.
Hydraulic cement, 935.
—— coal-cutting machine, 968.
—— cranes, 1965.
—— crow, 1117.
—— gauge, Darcy's, 1908.
—— lift, Davis', 1963.
—— lifting jack, Tangye's, 2159.
—— machine tools, 2345.
—— machinery, pumps for, 2691.
—— machines, varieties of, 1912.
—— motors, 1912.
—— press, portable, 1994.
—— propeller, Durozoi's, 1938.
—— rams, 1971, 1973.
—— riveting machine, 2347.
—— shearing machine, 2352.
—— swing bridge over the Ouse, 791.
—— tube expander, 2352.
—— weighing machine, 1982.
Hydraulics, 1886.
Hydrometer, 1996.
Hydrostatic press, 1983.
—— wheel press, 2345.
Hygrometer, 1996.
Hypocycloid curve, 1624.

ICE-MAKING machine, 1996.
—— —— Carré's, 1998.
—— —— Kirk's, 1999.
—— —— Mignot's, 2001.
—— —— Reece's, 2000.
Impact, 2002.
Impetus, 2002.
Impounding reservoirs, 3058.
Inclined plane, 2002.
Incrustation of boilers, 2002.
India-rubber, 929, 2004.
—— —— agglomeration of, 2006.
—— —— balls, 2009, 2013.
—— —— cement, 2010.
—— —— hard, 2014.
—— —— large sheets for fabrics, 2010.
—— —— machine belts, 2014.
—— —— oils for lubricating, 2010.
—— —— pastes and solutions of, 2009.
—— —— threads of, 2005.
—— —— tubing, 2010.
Indian brick-kiln, 660.
—— clamp-bricks, 662.

Indicator, 2015.
—— diagrams, 2020.
Inertia, 2024.
Ingram's brake, 608.
Injector, 2025.
—— Giffard's, 2025.
—— self-adjusting, 2026.
Inner gearing, 1633.
Insulator, 2028.
Insulators, 2990.
Involute curve, 1626.
—— gearing, 1632.
Iron, 2028.
—— alloys of, 2038.
—— beams, strength of rolled, 2406.
—— blast furnaces for, 338, 2046.
—— boiling and puddling pig, 2077.
—— bridge at Solferino, 739.
—— —— building, different systems, 765.
—— bridges, 680, 739, 748, 765.
—— cast, 2041.
—— —— charcoal finery, or Lancashire hearth, 2074.
—— —— Franche-Comté process, 2076.
—— refining, 2071.
—— theory of refining, 2074.
—— Walloon process, 2076.
—— chemical knowledge of, 2029.
—— corrugated, 2410.
—— cupola furnaces for, 2061.
—— deposited galvanically, 2033.
—— Ekman's reheating furnace, 2121.
—— ferric or maximum compounds of, 2031.
—— ferrous compounds, 2029.
—— fluxes for, 2045.
—— galvanized, 1610.
—— hammers and squeezers, 2099.
—— heating or balling furnace, 2116.
—— hot blast, 2054.
—— machine puddling, 2091.
—— manufacture, 2041.
—— ores, 2033.
—— puddling rolls, 2103.
—— reversing rolling-mills, 2109.
—— roasting, 2042.
—— roofs, 1036, 2795, 2800.
—— ship-building, 2123.
—— —— angle-iron frames, 2133.
—— —— beams, 2134, 2137.
—— —— bulkheads, 2136.
—— —— floor-plates, 2134.
—— —— framing of hatches, 2137.
—— —— keels, 2131.
—— —— keelsons, 2136.
—— —— outside plating, 2137.
—— —— rudder-bands, 2133.
—— —— rudder frames, 2132.
—— —— rudder-stops, 2133.
—— —— sheerstrakes, 2137.
—— —— stems, 2132.
—— —— stern-post and stern-rails, 2132.
—— —— stringers, 2135.
—— —— wash-plates, 2135.
—— universal rolling-mill, 2108.
—— wrought, 2066.
Irregular shaping machine, wood, 3109.
Irrigation, 2139.
—— canals of permanent supply, 2140.
—— drainage works, aqueducts, inlets, and super-passages, 2147.
—— falls, rapids, and locks, 2143.
—— headworks, dams, and regulators, 2145.
—— measurement of supply, 2151.
Isomorphism, 2155.

JACK, 2159.
—— screw, 1835, 2160.
—— Tangye's hydraulic, 2159.
Jacket, steam, 1195, 2160.
Jenny, 2160.
Jetty, 2160.
Jewellers' mill, 1810.
Jigging copper ores, 2536.
Jobson's moulds for casting metals, 1540.
Joggle, 2160.
Joint, abutting, 5, 2763.
—— ball-and-socket, 217.
—— breaking, 479, 640.
—— expansion, 1447.
—— lap, 2763.
Joints, 2160.
—— in metal, 2160, 2170.
—— in wood, 2160.
—— riveted, 2170, 2763.
Joists, 2170.
Joists, bay of, 292.
—— binding, 337.
—— boarding, 380.
Jonval's turbine, 1929.
Journal, 2170.
—— box, 2170.
Journals, friction of, 1331, 1581, 1585.

KEARNEY'S hydrant, 1995.
Keels and coal shipping, 2170.
Key, 2178.
Keys, compressed oak for permanent way, 2589.
—— forging, 1525.
—— iron taper, 2590..
Kiln, 2178.
—— Batchelar's, 2187.
—— Crossley's annealing, 2188.
—— for burning cement, Goreham's, 2178.
—— for drying grain, 2193.
—— Hoffman's, 2180.
—— malt, 2189.
—— Muller's, 2185.
King-post, 2194.
Kirkless Hall blowing engine, 375.
Kirk's ice-making machine, 1999.
Kitchens, ventilation of, 3043.
Knab or Pernolet coke-oven, 2557.
Knife-edge, 2194.
Knifing machine, 1835.
Knitting machine, 2194.
Knives, drawing, 1821.
Krauss and Co.'s repression brake, 614.
Kruisverband bond, 480.
Kyanizing, 2205.

LABURTHE'S compressed-air pumps, 1946.
Laggings, 479.
Lamp, safety, 2207.
Lamps, lighthouse, 2275.
Landsee's steam-brake, 613.
Lanterns, construction of lighthouse, 2269.
Lap, 2209.
—— joint, 2763.
Latent heat, 397.
—— —— of steam, 398.
Lath and plaster, 1049.
Lathe, 2209, 2322.
—— automatic wood-turning, 3115.
—— axle, 2342.
Lathes, hand and foot, 1796.
Lattice girder, 797, 828, 2209.
Launder, 2209.
Lead, 2209.
—— action of, on animal system, 2221.
—— alloys of, 2214.
—— combinations with diatomic metalloids, 2211.
—— distinctive characters, salts of, 2214.
—— haloid compounds, 2210.
—— manufacture, 2215.
—— ore dressing, 2537.
—— —— dressing, buddle, 2539.
—— —— dressing, crushing mill, 2539.
—— —— dressing, hotching tub, 2538, 2541.
—— smoke, 2221.
—— theory of smelting, 2218.
Leblanc's hydraulic ram, 1973.
Lee and Co.'s steam fire-engine, 1954.
Lee's brake, 594.
Leffel's double turbine, 3020.
Lemielle's ventilator, 1449.
Lens, achromatic, 8.
Letestu's pump, 1943.
Level, Burel's reflecting, 1007.
Levelling, 2221, 2966.
—— and surveying, 2953.
—— —— boning, 2971.
—— —— chaining base lines, 2954.
—— —— contours and hill shading, 2971.
—— —— correction for curvature, 2969.
—— —— correction for refraction, 2970.
—— —— enlarging and reducing plans, 2966.
—— —— field-book, 2960.
—— —— laying off perpendiculars, 2954.
—— —— measurement of hills, 2959.
—— —— obstructions in base lines, 2955.
—— —— plan drawing, 2964.
—— —— planning a survey, 2953.
—— —— plotting, 2964.
—— —— plotting section, 2973.
—— —— reduction of levels, 2968.
—— —— surveying chains, 2954.
—— —— traverse surveying, 2962.
—— instruments, 2980.
—— —— diaphragms, 2982.
Lever, 2221.
Lift, Davis' hydraulic, 1963.
Lifting turbine, Girard's, 1952.
Lifts, hoists, and elevators, 2221.
Light, catadioptric, 2265.
Lighthouse, clockwork apparatus, 2277.
—— construction of lanterns, 2269.
—— lamps, 2275.
—— Maplin Sand, 2262.
—— Wolf, 2255.
Lights, buoys, and beacons, 2255.
Lime burning, 2280.
—— concretes, 2284.
—— slaking and forming mortar, 2282.
Limes, mortars, and cements, 2279.
Linseed crushers, 729.
Liquid-manure distributor, 12.
Lock-chamber, 2305.
—— gates, iron, 2296.
—— —— materials employed, 2293.
—— —— mixed or composite, 2296.
—— —— opening and closing, 2295.
—— —— wooden, 2294, 2302.
—— —— wrought-iron, 2305.
Locks and lock-gates, 2292.
—— canal, 2307.
Locomotive, 2309.
—— boiler, 389.
—— eight coupled wheels, 2315.
—— four coupled wheels, 2315.
—— four-cylinder, 2319.
—— frame slotting machine, 2341.
—— names of parts, 2309.
—— six coupled wheels, 2315.
—— tender, names of parts, 2313.
—— the Fairlie, 2321.
—— with uncoupled wheels, 2319.
Locomotives, feed-pipe connection for, 1163.
—— adhesion of, 1341.
—— consumption of water, 1346.
—— dimensions of, 1351.
—— effective work of, 1350.
—— formulæ for power of, 1344.
—— tank, for sharp curves, 1421.
—— value of work of, 1341.
Long's bridge truss, 672.
Loom, 2160, 2321.
Low's rock-boring machinery, 515.
Lubricating oils for machinery, 2010.
Lug, 2322.
Lumber saw-mills, 3091.
Lunette, 1534.

MACADAM, or metalling for roads, 2742.
Macdonnel's wrought-iron sleepers, 2589.
Machine, 2322.
—— belts, 2014.
—— tools, axle-lathe, 2342.
—— —— bolt-threading machine, 2342.
—— —— compound planing machine, 2345.
—— —— curvilinear slotting machine, 2335.
—— —— drilling and boring machines, 2325.
—— —— flanging machine, 2341.
—— —— hydraulic, 2345.
—— —— hydrostatic wheel press, 2343.
—— —— lathes, 2322.
—— —— locomotive-frame slotting machine, 2341.
—— —— machine for boring axle-bearings, 2345.
—— —— milling machines, 2340.
—— —— multiple drilling machines, 2344.
—— —— planing machines, 2329.
—— —— screwing machine, 2334.
—— —— shaping machines, 2333.
—— —— wheel-boring machine, 2344.
—— —— wheel-cutting machine, 2337.
—— —— wheel-quartering machine, 2343.
Magistral, 1534.
Magnetism, 574.
Magnets, permanent, for explosion of mines, 572.
Main-deck line, ship-building, 384.
Malt-kiln, 2189.
Mandrel, 2352.
Manganese, 2352.
—— ores of, 2354.
Manometer, 1191.
—— condensed-air, 414.
Mansard roof, 2354.
Mansions, ventilation of, 3042.
Maplin Sand lighthouse, 2262.
Marine boiler, 389.
—— engine, 2355.
—— —— boilers, 389, 451, 2853.
—— —— condensers, 2853.
Marinoni and Cauvlé's lithographic press, 2644.

Marinoni's printing press, 2664.
Marriotte's law, 425.
Masonry, 1972, 2373, 2718.
—— arrangement of courses, 2376.
—— ashlar, 2373.
—— —— backed with rubble, 2375.
—— —— in copings, 2376.
—— coursed rubble, 2375.
—— —— rubble facing, 2376.
—— large rough stone blocks, 2376.
—— rubble backing, 2377.
—— stone pitching, 2377.
—— thickness of courses, 2376.
Matching machine, 3096.
Materials of construction, buckled plates, 2409.
—— —— chain cables, 2387.
—— —— classification of pillars, 2384.
—— —— classification of strains, 2382.
—— —— coefficients of crushing strength, 2383.
—— —— coefficients of tearing strength, 2387.
—— —— cohesion, 2377.
—— —— compressive strength of, 2382.
—— —— continuous beams, 2395.
—— —— corrugated iron, 2410.
—— —— deflection of beams, 2397.
—— —— elasticity, 2377.
—— —— experiments with corrugated iron, 2411.
—— —— flitch beams, 2408.
—— —— fractions of safety, 2406.
—— —— moduli of elasticity, 2381.
—— —— moduli of rupture, 2393.
—— —— railway axles, 2402.
—— —— rolled iron beams, 2406.
—— —— shearing strain, 2399.
—— —— strain of torsion, 2400.
—— —— strength and weight of buckled plates, 2410.
—— —— strength of, 2377.
—— —— strength of rolled iron beams, 2409.
—— —— tensile strength of, 2386.
—— —— transverse strains, 2388.
—— —— working load, 2405.
—— resistance of, 691.
Mather and Platt's boring machine, 526.
Maudline's steam fire-engine, 1955.
McCallan's battery, 539.
McCallum's inflexible arched truss, 677.
M'Connell's brake, 598, 607.
Measuring and folding machine, 1525, 2415.
Mechanical movements, 2421.
—— —— cams, 903, 1638, 2424.
—— —— clutch-boxes, 2422.
—— —— circular into rectilinear motion, and *vice versâ*, 2424.
—— —— crank motions, 2423.
—— —— eccentrics, 2423.
—— —— epicyclic train, 2451.
—— —— gasometers, 2449.
—— —— governors, 101, 1699, 2428.
—— —— mangle-wheels and racks, 2431.
—— —— micrometer screw, 2424.
—— —— paddle-wheels, 2450.
—— —— parallel motions, 2438.
—— —— pressure-gauges and barometers, 2451.
—— —— pulleys, 2422.
—— —— pumps, 2447.
—— —— rotary engines, 2445.
—— —— screw-clamps, 2431.
—— —— screw-propellers, 2450.
—— —— steam-traps, 2449.
—— —— steering apparatus, 2450.
—— —— valve-link-motion, and reversing gears, 2429.
—— —— variable motions, 2432.
—— —— water-wheels, 2446.
—— —— windmills, 2450.
—— power of steam, 423.
—— powers, 2452.
Mercury, 2453.
Merryweather's steam fire-engine, 1429, 1955.
Metal-turning tools, 1817.
Metallic alloys, 46.
—— —— component elements, 49.
Metalling and pitching, railway, 2725.
—— or macadam for roads, 2782.
Metalloids, 2457, 2458.
Metallurgy, 2457.
Metals, 2458.
—— affinity for chlorine, 2459.
—— —— for oxygen, 2459.
—— carburets, 2460.
—— chemical symbols of, 194.
—— classification of, 2457.
—— hydrated oxides, 2459.
—— sulphurets, 2460.
Meter, 2461.
Meters, dry, gas, 2466.
—— water, 2467.
—— wet, gas, 2461.
Metric system, 2468.
Micrometer screw, 2424.
Midship section, 381.
Mignot's ice-making machine, 2001.
Mill, 2476.
—— bone-crushing, 12, 482.
—— Carr's disintegrating flour, 2488.
—— English flour, 2501.
—— floating steam corn, 2199.
—— jewellers', 1810.
—— mortar, 2287.
—— oil machinery, 2482.
—— portable corn, 228.
—— semolina, 2495.
—— wind, various, 2450, 2476.
Milling machines, 2340.
Mills, lumber, 3087.
Millstones, plan of hanging, 2501, 2506.
Minerals, boring for, 498.
Mines, ventilation of, 1447.
Mining dial, Hedley's, 1015.
—— pumps, 2681.
—— —— André's, 2677, 2686.
—— —— Cornish, 2681.
—— —— Tyler's universal, 2683.
—— —— Tangye's special, 2683.
Moduli of elasticity, 2381.
—— of rupture, 2393.
Molecule, 2513.
Moment balance, 214.
—— of pressure, retaining walls, 2738.
—— virtual, 3052.
Moments of rupture and transverse strains, girders, 766.
Momentum, 7, 2516.
Moncrieff gun-carriage, 1720.
Monkeys, or rams, for driving piles, 2619.
Montgolfier ram, 35.
Moreland's floor, 1524.
More's calender, 900.
—— water-mangle, 902.
Mortar, 939, 1023, 2279.
—— brown, 939.
—— hydraulic, 939.
—— lime, 939.
—— mill, 2287.
—— mixing, 2287.
Mortars, limes, and cements, 2279.
Mortise, 2516.
Mortising machinery, 3099.
Motion, accelerated, 5.
—— and velocity of water upon wheels, 2559.
—— conversion of circular into rectilinear, 2424.
—— of heated air in vertical tubes, 941.
—— of water in canals, 907.
—— parallel, 2438, 2583.
—— retarded, 5.
Motte's bellows pump, 1945.
Moulding, 2516.
—— and matching machine, 3097.
—— bricks, 659.
—— toothed wheels, apparatus for, 1558.
Muffle, 2516.
Muley mills, 3087.
Muller's kiln, 2185.
Multiple drilling machines, 2344.
Muncke's battery, 288.
Murtha's brick-making machinery, 651.

NAPIER'S rods, 1.
Nasmyth's steam pile-driver, 2631.
—— ventilating fan, 1449.
Natural filters, 3074.
Nessler test, for water, 3053.
Neutral axis, 2516.
Nickel, 2516.
—— characteristics of the salts of, 2516.
Nillus' pump, 1943.
Nippers, pliers, and pincers, 1829.
Nitro-glycerine, 581.
Nogging, brick, 665.
Noria, 2516.
Norton's tube well, 159.
Nuts, forging, 1528.
—— and bolts, 2517.
—— and bolt-heads, hexagon, dimensions of, 2517.
—— and bolt-heads, weight of, 2517.

OATES' brick-making machinery, 642.
Oblique arch, 2517.
Oblique arch, angle of obliquity, 2517.
—— —— calculation of curves, 2522.
—— —— development of the curve of oblique section, 2518.
—— —— distance of obliquity, 2517.
—— —— example of, 2526.
—— —— imposts, 2525.
—— —— projection of spiral line upon a cylindrical surface, 2519.
—— —— projection of spiral surface, 2519.
—— —— to find the oblique section, 2518.
—— —— twisting rules, 2523.
—— —— voussoirs, 2523.
Oblique bridges, 727, 2517.
—— —— helicoidal arrangement, 727.
—— —— orthogonal arrangement, 732.
—— —— parallel arches in echellon, 734.
—— —— timber, 734.
Oil-cake crushers or breakers, 229.
—— mill machinery, 2482.
Oils for lubricating, 2010.
Old English bond, 479.
Omnimeter for measuring distances, 1210.
Optical instruments, 2527.
Ore-washing machine, Collom's, 2546.
Ores, machinery and processes employed to dress, 2527.
—— aluminium, 50.
—— antimony, 110.
—— arsenic, 144.
—— bismuth, 337.
—— copper, 1059.
—— gold, 1689.
—— iron, 2033.
—— lead, 2209.
—— manganese, 2354.
—— mercury, 2453.
—— silver, 2874.
—— tin, 3012.
—— zinc, 3116.
Oscillating engine, 1423.
Oscillation, centre of, 2552.
Oven, breeze, 640.
Ovens, coke, 2553.
Overfall, 251.
Overshot water-wheel, 2557, 2563.
—— —— form of buckets, 2563.
Oxidation of alloys, 47.
Ox-yoke, 15.

PACKING for pistons, 1181.
—— tin ores, 2529.
Paddle-wheel, 2451, 2566.
Paint, anti-corrosive, 1053, 1093.
Painting old work, 1053.
—— plaster, 1053.
—— woodwork, 1051.
Paisley water-works, 3078.
Palisade, fortification, 1534.
Pantograph, 2434.
Paper hanging, 1055.
—— machinery, 2566.
—— —— dusting machine, 2568.
—— —— evaporator, Sinclair's, 2581.
—— —— Houghton's process, 2579.
—— —— pulp-boiler, 2579.
—— —— rag-boiler, Darkin and Co.'s, 2569.
—— —— rag-pulper, Cowper's, 2573.
—— —— rag-pulper, Easton and Co.'s, 2571.
—— —— rag-pulper, Stuart's, 2571.
—— —— strainer, Ibotson's, 2574, 2577.
—— —— Voelter's process, 2580.
—— —— washing engines, 2570.
—— making machine, 2574.
Papin's saucepan, 420.
Parabolic truss, Roebling's, 702.
Parados, fortification, 1534.
Parallel arches in echellon, 734.
—— motions, 2438, 2583.
—— planing machines, wood, 3096.
—— rulers, 2438.
Parapet, fortification, 1534.
Parish's brick-drying apparatus, 651.
Parsons and Baynes' switch, 2601.
Pattinson's process for silver ores, 2894.
Pavements, 1043.
Pavement, tar, 1043.
Paving, boulder, 584.
—— for roads, 2782.
Pawl, 2583.
Pen, bow, 584.
Pendulum, 2583.
Penetration of projectiles, 998.
Percussion table, Rittinger's, 2550.
Permanent magnets, application of, to mines, 572.

Permanent way, 2503.
—— —— Adams' bracket fastening, 2592.
—— —— bearing surface of sleepers, 2587.
—— —— cast-iron sleepers, 2587.
—— —— chairs, keys, and fastenings, 2589.
—— —— compressed oak keys, 2589.
—— —— continental, 2609.
—— —— crossings, 2605, 2606.
—— —— details of, 2610.
—— —— English, 2608.
—— —— fish-plates, 2590.
—— —— Griffin's system, 2612.
—— —— in the United States, 2607.
—— —— joint-chairs, Fowler's, 2591.
—— —— joint for bridge rails, 2592.
—— —— Irish, 2609.
—— —— iron taper keys, 2590.
—— —— Larmenjat system, 2611.
—— —— laying, 2725.
—— —— light railways, 2612.
—— —— Metropolitan District, 2609.
—— —— North London, 2608.
—— —— original type, 2584.
—— —— points, self-locking, 2604, 2866.
—— —— rails, 2593.
—— —— rails, Adams' girder, 2594.
—— —— rails, Adams' suspended girder, 2595.
—— —— rails, Barlow's, 2593.
—— —— rails, Bessemer steel, 2598.
—— —— rails, Booth's steel-headed, 2598.
—— —— rails, bridge-shaped, 2594.
—— —— rails, earliest form of, 2593.
—— —— rails, employed in different countries, 2597.
—— —— rails, expansion of, 2593, 2726.
—— —— rails, Sandberg's, 2596, 2597.
—— —— rails, steel, 2597.
—— —— rails, testing, 2597.
—— —— rails with riveted joints, 2593.
—— —— rigid, 2585.
—— —— Semmering Railway, 2609.
—— —— sleepers, 2585.
—— —— switches, points, and crossings, 2600, 2603.
—— —— wrought-iron sleepers, 2589.
Pernolet or Knab coke-oven, 2557.
Perreaux's pump, 1945, 2689.
Persian wheel, 2615.
Pet cock, 2615.
Pfetsh's water-pressure engine, 1978.
Pick, 2616.
Picker, 2616.
Piers, 697, 2616.
Pile-driver, 2616.
Pile-driving machines, 2629.
—— —— Appleby Brothers', 2635.
—— —— Nasmyth's steam, 2631.
—— —— Sisson and White's steam, 2629.
—— —— endless chain, 2636.
—— —— telescopic, 2639.
Piles and pile-driving, 2616.
—— bearing and sheet, 2617.
—— calculation of supporting power, 2626.
—— cast-iron, 2624.
—— disc, 2642.
—— drawing and cutting off, 2623.
—— duration of iron, 2625.
—— excavating for, 2617.
—— force expended in driving, 2628.
—— heading and shoeing, 2618.
—— rams or monkeys for driving, 2619.
—— screw, 2641.
—— supporting power of, 2625.
—— timber, 2617.
—— —— driving, 2621.
—— —— with cast-iron screw-points, 2618.
—— Towle's apparatus for driving sheet, 2622.
Piling, 1018.
Pillars, classification of, 2384.
Pillow, 2644.
—— block, 2644.
Pincers, pliers, and nippers, 1829.
Pinion, 2644.
Pin-making machine, 2645.
Pipe, exhaust, 1173.
—— feed, 1463.
Pipes, 2650.
—— cast-iron, 2650.
—— —— calculation of weight, 2651.
—— diameter of mains and service pipes, 2653.
—— for pumps, 2674.
—— friction in, 2652.
—— iron, proportions of joints, 2654.
—— laying, 2657.
—— lead, 2655.
—— —— coated with tin, 2656.
Pipes, leakage at joints, water, 2654.
—— stone-ware and fire-clay, 2656.
—— water-works, 3066.
—— wrought-iron, 2655.
Piston, 2657.
—— rod, 2657.
—— rods of pumps, 2674.
Pistons of pumps, 2674.
—— packing for, 1181.
Pitch circles, 1627.
—— lines, 1627.
—— of roofs, 2787.
—— of wheels and screws, 2657.
Pitching and metalling, railway, 2725.
—— stone, 2377, 2782.
Plan, body, ship-building, 380.
—— half breadth, ship-building, 380.
—— sheer, ship-building, 380.
Plane, improved joiners', 1806.
Planes, 1820.
Planimeter, 2657.
Planing machine, 2329, 2659.
—— —— compound for connecting rods, 2345.
—— and matching machine, 3096.
—— machinery, wood, 3095.
Plaster, lath and, 1049.
—— paint on, 1053.
Plate glass, manufacture of, 1669.
—— wheel, 2659.
Platin, 2659.
Platinum, 2659.
Platt and Co.'s brick-making machinery, 647.
Pliers, pincers, and nippers, 1829.
Plumbers' tools, 1824.
Points, self-locking, 2604, 2866.
—— switches and crossings, 2600.
Polygon, funicular, 669.
Poncelet's water-wheel, 2660.
Poppet, 2692.
Portable engines, 11, 32.
—— forge, 1530.
—— hydraulic press, 1994.
—— railway, 12.
Portland cement, 931.
—— —— concrete, 2286.
Postern, 1534.
Preservation of timber, 2205.
Press, Gimson's eccentric, 497.
—— hydraulic, portable, 1994.
—— hydrostatic or Bramah, 1983.
—— printing, 2660.
Pressure, centre of, 1120.
—— earth, retaining walls, 2736.
—— fluid, retaining walls, 1888, 2734.
—— gauge, recording, 2727.
—— gauges and barometers, 2451.
—— moment of, retaining walls, 2738.
Prevention of dry-rot, 2205.
Priming of boilers, 448.
Primitive circles, 1627.
Principle of sufficient reason, 666.
—— equality of moments, 667.
Print-cutters' and carvers' tools, 1825.
Printing machine, bank-note, 218.
—— press, Carwood's improved Gordon, 2665.
—— —— Gordon, 2661.
—— —— Marinoni and Chaudré's lithographic, 2666.
—— —— Marinoni's, 2668.
—— —— Walter, 2669.
Prismatic compass, 2976.
Prisons, ventilation and warming of, 3045.
—— ventilation of, 3044.
Projectiles, penetration of, 998.
—— trajectory and velocity of, 1722.
Prony's friction dynamometer-brake, 616.
Propeller, Durozoi's hydraulic, 1938.
Proportional compasses, 2444.
Protractor, 2982.
Prudhomme's pump, 1945.
Puddling, 2077, 2670.
—— furnace, Siemens' gas, 2087.
Pugging, 651.
Pulley, 2670.
Pumping engine, American, 1417.
—— —— Ommanney and Co.'s horizontal, 1421.
Pumps, 1464, 1796, 1937, 2447, 2670.
—— air, 2691.
—— —— Barnett and Foster's, 2691.
—— air-chambers, 2677.
—— André's hydraulic, 2677, 2686.
—— angle or V bobs, 2676.
—— Armandie's balance-beam, 1945.
—— balance-bobs, 2676.
—— bilge, 1940, 2690.
—— Burgh's steam, 1425.
Pumps, Caligny's conical, without piston or valve, 1938.
—— Carrett and Co.'s steam, 1939.
—— centrifugal, 1948, 2679.
—— —— Colgnard and Co.'s, 1951.
—— —— Gwynne and Co.'s, 1949, 1950.
—— —— Neut and Dumont's, 1948.
—— chain, 1937, 2680.
—— —— Murray's, 2680.
—— contractors', 2690.
—— Cornish, 2681.
—— cylinders, 2671.
—— Earle's steam, 1940.
—— efficiency of, 2670.
—— Farcot's steam, 1941.
—— feed, 1464, 2691.
—— for draining mines, 2681.
—— emptying docks, 2690.
—— raising particular liquids, 2689.
—— supplying hydraulic machinery, 2691.
—— surface drainage, 2689.
—— water supply, 2689.
—— Girard's horizontal, 1942.
—— —— lifting turbine, 1952.
—— hand, 1796.
—— Hayward Tyler's universal, 2683.
—— Henry and Peyrolles', 1944.
—— Laburthe's compressed-air, 1946.
—— Letestu's, 1943.
—— Merryweather's India, 1953.
—— Motte's bellows, 1945.
—— Nillus', 1943.
—— Perreaux's, 1945, 2689.
—— pipes, 2677.
—— piston-rods, 2675.
—— pistons, 2674.
—— Prudhomme's, 1945.
—— reciprocating, 2671, 2678.
—— revolving piston, 1947.
—— rotary, 1947.
—— Scott's steam, 1939.
—— ship's, 1940, 2690.
—— Tangye's special, 2683.
—— Castraise, 1944.
—— Thirion's, 1944.
—— unlimited, 1945.
—— valves, 2672.
Puppet, 2692.
Purification of feed-water, 2003.
—— of water, 3071.
Putty, 1055.
Pyrometer, 2692.

QUADRANT, gunner's, 2771.
Quarrying, 2692.
Quay walls, construction without coffer-dams, 1840.

RACK, 2695.
—— and pinion, 1633.
Rails, 2593, 2695.
—— Adams' girder, 2594.
—— —— suspended girder, 2595.
—— Barlow's, 2593.
—— Bessemer steel, 2598.
—— bridge-shaped, 2594.
—— earliest form of, 2593.
—— employed in different countries, 2597.
—— expansion of, 2593, 2726.
—— Sandberg's, 2596, 2597.
—— steel, 2597.
—— steel-headed, Booth's, 2598.
—— testing, 2599.
—— with riveted joints, 2593.
Railway axles, 2402.
—— car mortising machine, 3104.
—— embankments and cuttings, 1383.
Railway engineering, 2695.
—— —— ballasting and boxing, 2725.
—— —— borings, and soiling slopes, 2717.
—— —— brickwork, 2718.
—— —— bridges, 2710, 2719.
—— —— calculation of acreage, 2710.
—— —— cost of transport over any given line, 2705.
—— —— cross-section of line, 2712.
—— —— culverts, 2710, 2724.
—— —— curves and gradients, 2701.
—— —— curves, resistance of, 2704.
—— —— cuttings and embankments, 2716.
—— —— drainage of cuttings, 2714.
—— —— drainage of embankments, 2715.
—— —— embankments and cuttings, 2711.
—— —— estimate, 2706.

Railway engineering, expansion of rails, 2593, 2726.
—— —— fencing, 2725.
—— —— gauge, 2701.
—— —— gradients and curves, 2701.
—— —— ironwork, 2719.
—— —— laying permanent way, 2725.
—— —— masonry, 2719.
—— —— metalling and pitching, 2725.
—— —— preliminary survey or reconnaissance, 2695.
—— —— reconnaissance or preliminary survey, 2695.
—— —— resistance of curves, 2705.
—— —— selection of route, 2699.
—— —— setting out bridge-work, 2710.
—— —— setting out culverts, 2710.
—— —— setting out side widths, 2710.
—— —— setting out tunnels, 2710.
—— —— setting slopes, and borings, 2717.
—— —— specification, 2726.
—— —— staking and setting out the line and works, 2706.
—— —— surveying and levelling the line, 2711.
—— —— trial lines by aid of a map, 2698.
—— —— trial lines by compass, 2696.
—— —— trial or flying levels, 2698.
—— —— tunnelling, 2710, 2720.
—— portable, 12.
—— signals, 2860.
—— —— locking, 2866.
Rainfall, 3055.
—— table of, 3056, 3057.
Ram, Bolée's hydraulic, 1971.
—— Leblanc's hydraulic, 1973.
—— Montgolfier, 35.
Rampart, fortification, 1534.
Rams, hydraulic, 1971.
—— or monkeys for driving piles, 2619.
Range-finders, 1772.
Ranging bond, 481.
Rasps and files, 1817.
Ratchet-wheel, 2726.
Ravelin, fortification, 1534.
Reaction, 2726.
—— wheel, 2726.
Reamer, 2727.
Reaping hooks, 1832.
—— machine, 16.
Reay's envelope machine, 1435.
Reciprocating mortising machine, 3102.
—— pumps, 2671.
—— —— calculation of efficiency, 2678.
Recording pressure-gauge, 2727.
Redan, fortification, 1534.
Redoubt, fortification, 1534.
Reece's ice-making machine, 2000.
Refrigerator, 2728.
—— Morton and Co.'s, 1056.
—— Pontifex and Co.'s, 1057.
—— Stirk's, 1058.
Refrigerators and wort-coolers, 1055.
Regulator, water, 3077.
Reichenbach's water-pressure engine, 1976.
Remblai, fortification, 1534.
Rennie's iron floating dock, 1262.
Resawing, machine for, 3089.
Reservoir, 2728.
—— river Furens, 1132.
—— walls, formulæ for the section of, 1146.
—— —— stability of, 1144.
Reservoirs, 3058.
—— distributing, 3070.
—— impounding, 3058.
—— store, 3058.
Resistance, causes influencing, 1331.
—— —— air, 1335.
—— —— condition of permanent way, 1335.
—— —— curves, 1333, 1336, 2705.
—— —— friction, 1331.
—— —— frost, 1333.
—— —— inclines, 1332, 1334.
—— —— length of train, 1333.
—— —— speed, 1335.
—— —— temperature, 1332.
—— —— wind, 1336.
—— of curves, 1333, 1336, 2705.
—— goods trains, 1324, 1354.
—— locomotive engines to motion, 1316.
—— —— engines to starting, 1319.
—— materials, 691, 1359.
—— mixed trains, experiments, 1359.
—— passenger trains, 1326, 1360.
—— —— trains to starting, 1328.
—— railway carriages to traction, 1306.
—— —— trains in general, 1320.
Resistance of trains, formulæ for calculating, 1338, 1388.
—— —— to starting, 1328.
Retaining walls, 2728.
—— —— buttresses, 2747.
—— —— counterforts, 2746.
—— —— dams and weirs, 2743.
—— —— dock, 2743.
—— —— earth pressure, 2736.
—— —— fluid pressure, 2734.
—— —— form of profile, 2742.
—— —— harbour, 2743.
—— —— land-ties, 2748.
—— —— moment of pressure, 2738.
—— —— practical design and construction, 2742.
—— —— profile, 2742.
—— —— profile, transformation of, 2740.
—— —— relieving arches, 2747.
—— —— revetments, 2745.
—— —— river, 2743.
—— —— sea, 2743.
—— —— shock of current, 2738.
—— —— stability of, 2728.
—— —— struts, 2748.
—— —— thickness, 2739.
—— —— thrust of material retained, 2734.
—— —— transformation of profile, 2740.
Retarded motion, 5.
Retorts, fire-clay, process of making, 1554.
Return-acting trunk screw engines, 2843.
Return connecting-rod screw engines, 2846.
Reverberatory furnace, 1597.
Revetment, fortification, 1534.
Revolver, 1488.
—— Albini's, 1489.
—— Smith and Wesson's, 1491.
Revolving-piston pumps, 1947.
Rheostat, 542.
Rifle, Albini-Braedlin, 1482.
—— Berdan, 1485.
—— Burton, 1479.
—— Burton's magazine, 1493.
—— Chassepot, 1483.
—— J. H. Burton's, 1486.
—— Martini-Henry, 1473, 1484.
—— Morgenstern, 1472.
—— Peabody, 1482.
—— Prussian needle, 1481.
—— Remington, 1470, 1484.
—— Sharp's, 1472.
—— Snider, 1487.
—— Springfield, 1472.
—— Ward-Burton, 1474.
—— Westley Richards', 1484.
Rigg's apparatus for tipping coals, 1857.
Rivers, 2749.
—— bars, 2762.
—— determination of cross-section, 2752.
—— discharge, 2753.
—— dredging, 2756.
—— dykes, 2757.
—— embankments, 2758.
—— improvement of channel, 2756.
—— protection of banks from currents, 2759.
—— retaining walls, 2743.
—— sediment in, 2755.
—— sounding, 2751.
—— stability of channel, 2754.
—— tides in, 2749.
—— training walls, 2761.
—— velocity, 2753.
—— weirs, 2760.
Riveted joint, butt, 5, 2763.
—— —— lap, 2209, 2763.
—— —— lap of joint, 2767.
—— —— pitch of rivets, 2765.
—— —— strength of, 2763.
—— —— thickness of rivets, 2765.
—— joints, 2170, 2763.
Riveting machine, hydraulic; 2347.
Road-roller, Aveling and Co.'s steam, 1434.
Roads, 2770.
—— fences, 2785.
—— maintaining and repairing, 2783.
—— permanent, 2773.
—— —— asphalted, 2783.
—— —— cross-section, 2780.
—— —— drainage, 2780.
—— —— foundation, 2781.
—— —— gradients and tractive resistance, 2775.
—— —— metalling or macadam, 2782.
—— —— selection of route, 2773.
—— —— stone paved, 2782.
—— —— surface of, 2782.
Roads, rolling, 2785.
—— temporary, 2770.
—— —— hill, 2771.
—— —— plank, 2770.
Roast-ovens or furnaces, 1597
Roasting, principles of, 1598.
—— silver ores, 2549.
Rock-boring machinery, 515, 1299.
Rock-shaft, 2786.
Roebling's system, arches, 716.
—— —— cables, 713.
—— —— chords, 715.
—— —— diagonals in panels, 718.
—— —— floor-beams, 717.
—— —— general description, 703.
—— —— method of raising the superstructure, 719.
—— —— posts, 716.
—— —— roller-plates, 710.
—— —— saddles, 712.
—— —— statical condition of the structure under variable loads, 709.
—— —— stays, 713.
—— —— storm-cables, 718.
—— —— strains in arches and cables, 707.
—— —— supporting power of stays, 705.
—— —— suspenders, 715.
—— —— parabolic truss, 702.
—— —— towers, 711.
Rolled iron beams, strength of, 2406.
Roller, Aveling and Co.'s steam road, 1434.
Rolling mills, 2108, 2786.
Rolls, goldsmiths' and dentists', 1810.
Roman cement, 933.
—— —— concrete, 2285.
Roofing, bay of, 292.
Roofs, 1025, 2354, 2786.
—— arched, 1027.
—— —— iron, 2800.
—— classification of, 2786.
—— compound, 2798.
—— coverings, 1032.
—— —— for timber, 2798.
—— designing, 2786.
—— domes or cupolas, 2792.
—— double trussed iron, 2815.
—— examples of, 2789, 2790, 2791, 2794, 2795, 2799, 2804, 2809, 2819.
—— flat, 1027.
—— general principles of wooden, 1025.
—— Gothic, 1027, 2790.
—— iron, 1036, 2800.
—— —— domes, 2795.
—— loads on, 2787.
—— metal coverings, copper, 1036.
—— —— covering, iron, 1035.
—— —— coverings, lead, 1036.
—— —— coverings, zinc, 1036.
—— pitch of, 2787.
—— scantlings for, 2791.
—— timber, 2788.
—— trussed, 2789.
—— —— iron, 2810.
—— wind pressure on, 2821.
Root-cutters, 229.
Rope-making machine, 2821.
—— —— hemp rope, 2821.
—— —— Huddart's, 2827.
—— —— Smith's wire, 2834.
—— —— wire ropes, 2831.
—— porter, 11, 21.
Ropes, hemp, 2821.
—— wire, 2831.
Rotary engine, 2445, 2837.
—— pumps, 1947.
Rough-cast, 1050.
Rubble masonry, backing, 2377.
—— —— coursed, 2375.

SAFETY-CAGE, 897.
Safety, fractions of, 2406.
—— lamp, 2207.
—— valves, 1186, 2837.
Sally-port, fortification, 1534.
Salts of nickel, characteristics of, 2516.
Sandberg's rails, 2596.
Saw, bow, 584.
—— hand, 1796.
—— mills, 3087, 3089.
Sawing machinery, 3087.
Saws, 584, 1796, 1813, 2837.
Scaffolding, 2837.
Scaffolds, staging, and gantries, 2837.
Scantlings for timber roofs, 2791.
Scarp, fortification, 1534.

Schiele's anti-friction curve, 1586.
Schools, ventilation and warming of, 3029.
Schwartz's blasting gunpowder, 582.
Scoops, 1834.
Scott's naval gun-carriage, 1718.
Screw and driver, improved, 1804.
Screw engines, 2841.
—— —— double-trunk, 2842.
—— —— return-acting trunk, 2843.
—— —— return connecting-rod, 2846.
—— —— single piston-rod, 2845.
—— —— steam-launch, 2855.
—— jack, 1835, 2859.
—— making machine, 2856.
—— piles, 2262, 2641.
—— propellers, 2450.
Screwing machine, 2338, 2859.
Scroll sawing machine, 3094.
Sea wall, 2743, 2859.
Section, chief vertical longitudinal, 384.
—— midship, 381.
Segmental arches, 688.
Semicircular arches, 684.
Semolina mill, 2495.
Separator, bran, 629.
—— silver ores, 2547.
—— tin ores, 2530.
Sewing machine, boot, 495.
Sextant, 2974.
Shand and Mason's fire-engine, 1431.
Shaping machinery, wood, 3107.
—— machines, 2333, 2860.
—— —— wood, 3109.
Shearing machine, hydraulic, 2352.
—— strain, 2399.
Shears, 1809.
—— guillotine, 1810.
—— sheep, 15, 1833.
Sheer-plan, 380, 382.
Sheet and bearing piles, 2617.
—— glass, manufacture of, 1672.
—— piles, Towle's apparatus for driving, 2622.
Shingles, 1035.
Shipbuilding, iron, 2123.
Ships' pumps, 1940, 2690.
Shovels, 1834.
Shutter, boxing of a, 584.
Sickles, 1832.
Side widths, setting out, railway engineering, 2710.
Siemens' furnaces for steel, 2937.
—— puddling furnace, 2087.
Signals, 2860.
—— locking, 2866.
Silbermann's heliostat, 1879.
Silicate of soda, 1054.
Silver, 2871.
—— assay of, 2895.
—— German, 1668.
Silver-ore dressing, 2875.
—— —— in Colorado, 2546.
—— —— Pattinson's process, 2894.
—— —— Rittinger's percussion table, 2550.
—— —— roasting, 2549, 2884.
—— —— separator, 2547.
—— —— smelting, 2888.
—— —— Von Patera's process, 2887.
—— —— washing machine, 2546.
—— —— Ziervogel's process, 2886.
—— ores of, 2874.
—— salts of, 2874.
Silver's machine for boring wheel-hubs, 1805.
Single piston-rod screw engines, 2845.
Siphon, 1981.
—— water-wheels, 1918.
Sisson and White's pile-driver, 2629.
Skew bridges, 700, 790, 2517.
Skylights, 1046.
Slates, 1032.
Sleepers, 2585.
—— bearing surface of, 2587.
—— cast-iron, 2587, 2588.
—— wrought-iron, 2589.
Sleeve, 2898.
Slip of belts, 299.
Slotting machine, 2898.
—— —— curvilinear, 2335.
—— —— locomotive frame, 2341.
Smee's battery, 539.
Smelting furnace, Thomas', 1602.
Smith and Locke's process, casting metals, 1542.
Smiths' tongs, 1529.
Snifting valve, 36.
Solders, 49.
Sole-plate, 294.
Soluble glass, 1677.
Sources of heat, 399.
Spades, 1834.
Spalling tin ores, 2527.
Specific heat, 392.
—— gravity of alloys, 47.
—— heat, coefficients of, 393, 394.
—— —— of various substances, 49.
Spelter, 3116.
Spiral wheel, 2898.
Spontaneous rotation, centre of, 1796.
Springs, 3057.
—— water supply, 3057.
Spur-wheel, 2898.
Squares and bevels, 1815.
Squeezer, 2898.
Staging, scaffolds, and gantries, 2837.
Stairs, 1047.
—— stone, 1047.
—— wooden, 1048.
Stamping tin ores, 2527.
Stand-pipe, substitute for, 1979.
Stationary boilers, 465.
—— engine, 2898.
—— —— Cornish, 2913.
—— —— beam, 2910.
—— —— horizontal, 2912, 2916.
—— —— vertical, 2913.
Stave-making and cask machinery, 929, 2917.
Steam, calorific action in formation of, 422.
—— condensation of, 421.
—— corn-mill, floating, 2499.
—— definition of, 410.
—— density of, 417.
—— elastic force of, 412, 415.
—— engine, 11, 441, 1181, 1429, 1955, 2308, 2841, 2898, 2921.
—— —— connecting rod, 1194.
—— —— crank-shaft bracket, 1196.
—— —— cylinder with steam-jacket, 1195.
—— —— eccentric, 1196.
—— —— marine, governor, 1186.
—— —— packing for pistons, 1181.
—— —— parallel motion, 1197.
—— —— portable, 11.
—— —— safety-valve, 1183.
—— —— straight-link valve-motion, 1199.
—— —— the Rocket, 441.
—— expansion of, calculation of total work by, 425, 2904.
—— —— work developed by, 424.
—— fire-engine, Lee and Co.'s, 1954.
—— —— Mazeline's, 1955.
—— —— Merryweather's, 1429, 1955.
—— —— Shand, Mason, and Co.'s, 1431.
—— flow of, 402.
—— flow of, through pipes, 408.
—— formation of, in vacuum, 411.
—— gauge, 1621.
—— influence of temperature on formation, 411.
—— jacket, 1195, 2160.
—— jet, 441.
—— latent heat of, 398.
—— launch, screw engines, 2855.
—— lubrication of, 1200.
—— mechanical power of, 423.
—— —— properties of, 402.
—— physical properties of, 410.
—— pile-driver, Nasmyth's, 2631.
—— —— Sisson and White's, 2629.
—— —— endless chain, 2636.
—— —— the telescopic, 2639.
—— power, cultivation by, 20.
—— pressure gauge, 1199.
—— principles of the formation of, 411.
—— pump, Burgh's, 1425.
—— relation between elastic force and temperature, 413.
—— road-roller, Aveling and Co.'s, 1434.
—— ships, consumption of coal in, 2852.
—— superheating of, 449.
—— temperature of, 415.
—— traps, 2449.
—— velocity of, 402.
—— volume of, 417.
—— whistle, 1194.
Steel, 2921.
—— Bessemer process, 2923.
—— cast, 2934.
—— cementation, 2921.
—— rails, 2597.
—— Siemens' furnaces, 2937.
—— Whitworth's process for casting under pressure, 1562.
Steele's improved Burr truss, 674.
Steering apparatus, 2450.
Stench traps, 1284.
Step, 2938.
Sterne's buffing apparatus, 882.
Sterro-metal for lining guns, 177.
Stetefeldt furnace, 1604.
Stillman's brake, 588.
Stirrup, 2938.
Stocks and dies, 1822.
Stone, 2838.
—— breaking machine, Blake's, 2544.
—— bridges, 683, 699, 739.
—— —— formulæ for dimensions of, 683.
—— —— skew, 700, 727, 2517.
—— conduits, 3062.
—— dams, 1139.
—— pitching, 2377, 2782.
Storage reservoirs, 3058.
Stove, 2938.
Stoves, 3047.
—— Dr. Arnott's, 3047.
—— Gurney's, 3048.
—— hot-air, 3048.
—— Sylvester's, 3047.
Strains, classification of, 2382.
—— in trussed girder bridge 300 ft. span, 721.
—— of torsion, 2400.
—— shearing, 2399.
—— transverse, 2388.
Straps, 2938.
Straw-choppers, 229.
Strength and weight of buckled plates, 2410.
—— coefficients of crushing, 2383.
—— —— of tearing, 2387.
—— compressive, of materials, 2382.
—— of materials, 2377.
—— of rolled iron beams, 2406.
Stretcher, 479.
Stroke, 2938.
Strut, 667.
Struts and ties, distinction between, 2818.
Struvé's ventilator, 1448.
Stucco, bastard, 265.
Submarine cables, 2997.
—— —— Atlantic telegraph, 3002.
—— —— machinery for laying, 3003.
—— —— machinery for picking up, 3007.
Sucking ventilators, 1461.
Suez Canal, 917.
Sugar, clarification, 2943.
—— concentration of cane-juice, 2946.
—— curing, 2949.
—— evaporating apparatus, 1445.
—— evaporation, 2945.
—— filtration, 2945.
—— machinery, 2938.
—— —— centrifugal machine, 2950.
—— —— Fryer's concretor, 2949.
—— —— vacuum pan, 2947.
—— mill, 2938.
—— —— combined cane, 2940.
Sun burner, ventilation by, 3044.
—— wheel, 2953.
Surface-drainage pumps, 2689.
Surveying, 2953.
—— and levelling, 2953.
—— —— boning, 2971.
—— —— chaining base lines, 2954.
—— —— contours and hill shading, 2971.
—— —— correction for curvature, 2969.
—— —— correction for refraction, 2970.
—— —— enlarging and reducing plans, 2966.
—— —— field-book, 2960.
—— —— laying off perpendiculars, 2954.
—— —— levelling, 2966.
—— —— measurement of hills, 2959.
—— —— obstructions in base lines, 2955.
—— —— plan drawing, 2964.
—— —— planning a survey, 2953.
—— —— plotting, 2964.
—— —— plotting section, 2973.
—— —— railway, 2711.
—— —— reduction of levels, 2968.
—— —— surveying chains, 2954.
—— —— traverse surveying, 2962.
—— instruments, 2974.
—— —— box sextant, 2974.
—— —— for measuring angles by reflection, 2974.
—— —— prismatic compass, 2976.
—— —— tapes, 2974.
—— —— the chain, 2974.
—— —— theodolite, 2977.
Suspension bridges, 741, 760.
Swage-blocks, 1808.
Swing-bridge, hydraulic, over the river Ouse, 791.

Switch, 2983.
—— box, Iwan and Rapier's, 2603.
—— Parsons and Baynes', 2601.
—— Ramsbottom and Rapier's, 2602.
Switches, points, and crossings, 2600.

TABLE, Rittinger's percussion, 2350.
Tangye's hydraulic lifting-jack, 2159.
—— special mining pumps, 2683.
Tank locomotive for sharp curves, 1421.
Tanners' and curriers' hand-tools, 1826.
Tap, 2983.
Tappet, 2983.
Tearing strength of materials, coefficients of, 2387.
Telegraphy, 2983.
—— batteries, 264, 539, 2983.
—— earth-wires and plates, 2993.
—— insulators, 2990.
—— poles, 2989.
—— testing joints and distance of fault, 2994.
—— testing of joints, insulated wire, 2997.
—— submarine cables, 2997.
—— underground wires, 2993.
—— wire, 2983.
Telemeters, 1772.
Telescopic steam pile-driver, 2639.
Temperature at boiling-point, fixity of, 419.
—— increase of, caused by expenditure of fuel, 401.
—— of bodies, relation of, to heat, 394.
—— of boiling-point, influence of substances in dissolution upon, 421.
Tenaille, fortification, 1534.
Tenaillon, fortification, 1534.
Tenoning machinery, 3103.
Tensile strength, experiments, 333.
Tension-rollers, 314.
Tensions, graphical determination of, 669.
Testing machine, 3009.
Thatching, 1033.
Theodolite, 2977.
—— Everest's, 2979.
Thermo-electricity, 270.
Thirion's pump, 1944.
Thomson and Co.'s calender, 899.
Thomson's boiler, 389.
—— water-wheel, 1933.
Threshing machine, 14, 223.
Tie, 667.
Ties and struts, distinction between, 2818.
Tiles, 1033.
Timber bridge construction, 735.
—— oblique bridges, 734.
—— preservation of, 2205.
—— roofs, 2788.
—— rule for calculating heartwood in, 2586.
Tin, 3012.
—— and coppersmiths' tools, 1809.
—— dressing, 2527.
—— —— buddling, 2528.
—— —— circular buddles, 2529.
—— —— dilluing, 2534.
—— —— packing, 2529.
—— —— roasting, 2533.
—— —— spalling, 2527.
—— —— stamping, 2527.
—— —— the hand-frame, 2532.
—— —— the separator, 2530.
—— —— tossing, 2528.
—— ores of, 3012.
—— salts of, 3013.
Tinning of brass and copper, 1558.
Tongs, smiths', 1529.
Tools, coopers', 1814.
—— engravers', 1816.
—— hand, 1796.
—— metal-turning, 1817.
—— print-cutters' and carvers', 1825.
—— tanners' and curriers', 1826.
—— tin and coppersmiths', 1809.
Toothed wheels, apparatus for moulding, 1558.
Torsion, strain of, 2400.
Tossing tin ores, 2528.
Toulouse water-works, filtering galleries, 3075.
Towle's apparatus for driving sheet piles, 2622.
Tracing, graphic, 405, 416.
Tractive force, 9.
Trajectory and velocity of projectiles, 1722.
Transport, cost of railway, 2705.
Transverse strain, 2388.
Traverse, fortification, 1534.
Trigonometrical lines, relations of, 688.
Trimmer, brick, 665.
Trowels, 1832.
Truss, improved Howe, 675.
—— Long's, 672.
—— McCallum's inflexible arched, 677.
—— Roebling's parabolic, 702.
—— Steele's improved Burr, 674.
—— the Burr, 672.
—— the Howe, 673.
Tube-expander, hydraulic, 2352.
—— well, 159.
Tubing for borings, 513.
—— india-rubber, 2010.
Tunnelling, 2720, 3014.
Tunnels, 2710.
Turbine, Leffel's double, 3020.
—— the screw-wheel, 1932.
Turbines, 1922, 3014.
—— Euler's, 1924.
—— Fourneyron's system, 1922.
—— Girard's, 1925.
—— —— lifting, 1952.
—— Jonval's, 1929.
—— Thomson's, 1923, 1936.
—— with horizontal axis, 1930.
Turn-table, 3022.
Turning machines, wood, 3115.
Turnip-cutters, 229.
Tuyere, 3022.
Twisting rules, oblique arch, 2523
Tyerman's hoop-iron bond, 482.
Tyne Docks, South Shields, 1254.
Type-founding machine, Caslon and Fagg's, 1565.

UNDERSHOT water-wheel, 1511, 1917, 3022.
Unity of heat, 392.
Universal joint, 3022.
Unlimited pumps, 1945.

VALVE, escape, 1445.
—— safety, 1183, 2837.
Valves of pumps, 2672.
Van Patera's process, silver ores, 2887.
Velocity, 3023.
—— and trajectory of projectiles, 1722.
—— angular, 95.
—— virtual, 3052.
Ventilating fan, Guibal's, 1447, 1449.
—— —— Nasmyth's, 1449.
Ventilation and warming, 3023.
—— —— Drysdale and Hayward's system, 3039.
—— barracks, 3044.
—— causes of vitiation in atmosphere, 3023.
—— composition of atmospheric air, 3023.
—— Griscom's method, 3041.
—— Joly's method, 3042.
—— means of renewing atmosphere, 3024.
—— of ball-rooms, 3042.
—— barracks, 3044.
—— bed-rooms, 3043.
—— club-houses, 3038.
—— dwelling-houses, 3039.
—— hospitals, 3026.
—— kitchens, 3043.
—— mines, 1447.
—— prisons, 3044, 3045.
—— schools, 3029.
—— theatres and public rooms, 3032.
—— quantity of air required for, 3024.
—— Vienna prize plan, 3031.
—— warming of ventilative current, 3025.
Ventilator, 1460.
—— Lemielle's, 1449.
—— Struvé's, 1448.
Ventilators, blowing, 1463.
—— sucking, 1461.
Vertical engine, 2913.
Viaduct, 3050.
Vicar's bread and biscuit making machinery, 637.
Vice, 3052.
Victoria Docks, 1234.
Virtual velocity, 3052.
Vis inertia, 3052.
—— viva, 3052.

WAGON, ballast, 218.
—— boiler, 390.
—— farm or contractors', 15.
Walls, 1021.
—— boulder, 584.
—— breast, 640.
—— of framed work, 1028.
Walter printing press, 2669.
Warming, 3045, 3052.
Warming by gas, 3050.
—— hot water, 3048.
—— steam, 3049.
—— grates, 3045.
—— stoves, 3047.
Washing machine for dressing silver ores, 2546.
Water, analysis of, 3052.
—— boring for, 125.
—— density of, 1886.
—— ebullition of, 419.
—— effects of contraction of orifices on flow of, 1889.
—— flow of, through conical converging tubes, 1901.
—— flow of, through conical diverging tubes, 1904.
—— flow through cylindrical ajutages, 1899.
—— flow of, through orifices, 1887.
—— flow of, through orifices in thin partitions, 1892.
—— flow of, under very small heads, 1906.
—— hardness of, 3054.
—— lines, chief, ship-building, 382.
—— —— ship-building, 387.
—— mangle, More's, 902.
—— meter, 2467.
—— motion and velocity of, upon wheels, 2559.
—— motion of, in canals, 907.
Water-pressure engine, Pfetsh's horizontal double-action, 1978.
—— —— engine, Reichenbach's, 1976.
—— —— engines, 1973.
—— pressure of, 1119.
—— purification of, 3071.
—— —— distillation, 3071.
—— —— filter beds, 3071.
—— —— filtration, 3071.
—— regulator, 3077.
—— specific weight of, 1886.
—— supply and drainage areas, 3061.
—— —— pumps for, 2689.
—— the fluid vein, 1889.
—— wheel, overshot, 2557.
—— —— Poncelet's, 2660.
—— wheels, 1912, 2446, 2557, 2660.
—— —— breast, 1915.
—— —— float, 1511, 1917.
—— —— helicoidal float, 1917.
—— —— siphon, 1918.
—— —— the vortex, 1933.
—— —— the Wasserling, 1914.
—— —— Thomson's, 1932.
—— —— turbines, 1922, 3014.
—— —— undershot, 1920, 3022.
—— works, 3052.
—— —— analysis of water, 3052.
—— —— artificial water-channels, without masonry, 3062.
—— —— choice between pipes and conduits, 3066.
—— —— construction of, at Paisley, 3078.
—— —— culverts, critical examination of, 3065.
—— —— culverts, different kinds of, 3064.
—— —— culverts to contain pipes, 3066.
—— —— distribution of pipes, 3067.
—— —— general principles on the choice of conduits, 3067.
—— —— hardness of water, 3054.
—— —— inclination and section of feeders and conduits, 3062.
—— —— limit of the aqueduct at the boundaries of the distribution, 3070.
—— —— necessity and position of distributing reservoirs, 3070.
—— —— purification of water, 3071.
—— —— rainfall, 3055.
—— —— rainfall, tables of, 3056.
—— —— springs, 3057.
—— —— stone or brick conduits, 3062.
—— —— store reservoirs, 3058.
—— —— water supply and drainage areas, 3061.
Watson's bread-making machinery, 630.
Web, 3087.
Wedge, 3087.
Weighing machine, 211, 215, 1982, 3087.
—— —— hydraulic, 1982.
Weirs, 2743, 2760.
—— and dams, retaining walls, 2743.
Wesserling water-wheel, 914.
Wheat-hulling machine, 2493.
Wheel-boring machine, 2344.
—— and axle, 3087.
—— cutting machine, 2337.
—— hubs, Silver's machine for boring, 1805.
—— press, hydrostatic, 2345.
—— quartering machine, 2343.

Wheels, apparatus for moulding toothed, 1558.
—— curves for teeth of, 1621.
—— dimensions and forms of teeth, 1628.
Whitewash, 1054.
Whittle boiler, 390.
Whitworth's apparatus for casting steel under pressure, 1562.
Wind pressure on roofs, 2821.
—— velocity of, 89.
Winding engine, Fletcher and Co.'s, 1424.
Windmills, 2450, 2476.
Windows, 1045.
Wire gauge, Birmingham, 1620.
—— ropes, 2831.
—— —— flat, 2832.
Wire ropes, formed, 2832.
—— —— laid, 2833.
—— —— selvagee, 2831.
Wolf lighthouse, 2255.
Wollaston battery, 268, 539.
Wood-boring machine, 3104.
—— planing machine, 3095.
—— shaping machine, 3107.
—— —— machinery, 3107.
—— turning machines, 3115.
Wooden bridges, 671, 735.
Woodwork, painting, 1051.
Wood-working machinery, 3087.
Work developed by expansion of steam, 424.
—— done with full pressure of steam, 423.
Working load, 2405.
Worm, 3115.
Wort-coolers and refrigerators, 1055.
Wrench, 3115.
Wrought iron, 2066.

ZERO, 1827, 3115.
Ziervogel's process of treating silver ores, 2886.
Zigzag, 3116.
—— fortification, 1534.
Zinc, 3116.
—— ores of, 3116.
—— salts of, 3117.

THE END.
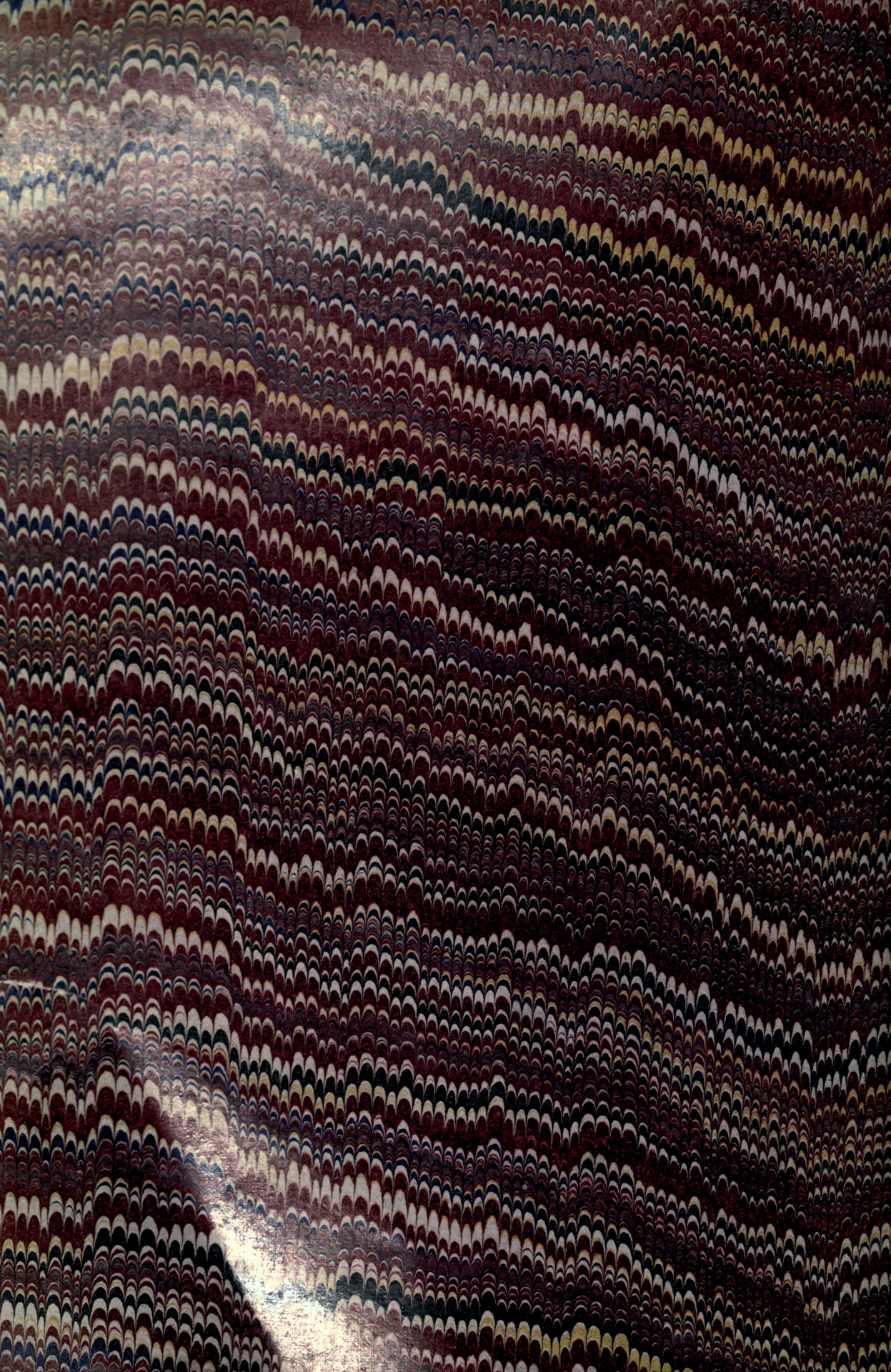
LONDON: PRINTED BY WILLIAM CLOWES AND SONS, STAMFORD STREET AND CHARING CROSS.